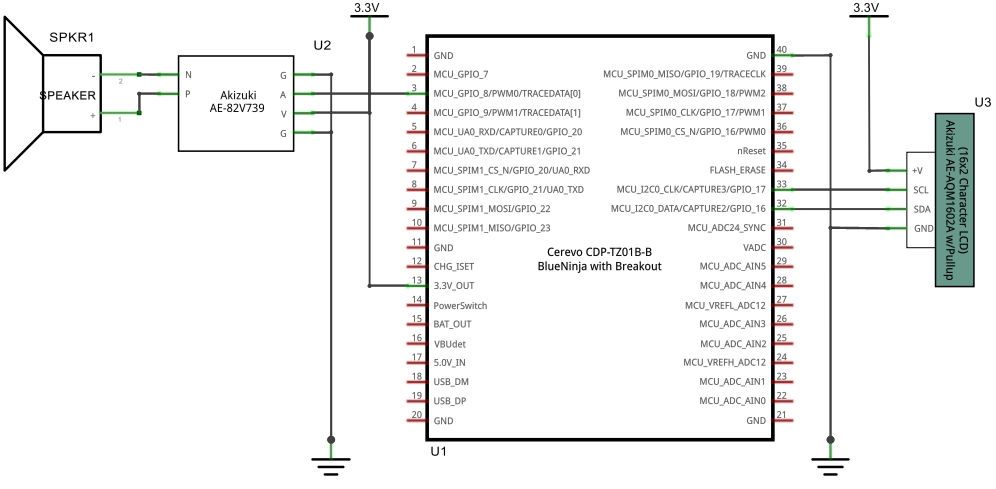
SPKR1
SPEAKER
-
+
2
1
N
P
Akizuki
AE-82V739
G
A
V
G
U2
3.3V
3.3V
1 GND
2 MCU_GPIO_7
3 MCU_GPIO_8/PWM0/TRACEDATA[0]
4 MCU_GPIO_9/PWM1/TRACEDATA[1]
5 MCU_UA0_RXD/CAPTURE0/GPIO_20
6 MCU_UA0_TXD/CAPTURE1/GPIO_21
7 MCU_SPIM1_CS_N/GPIO_20/UA0_RXD
8 MCU_SPIM1_CLK/GPIO_21/UA0_TXD
9 MCU_SPIM1_MOSI/GPIO_22
10 MCU_SPIM1_MISO/GPIO_23
11 GND
12 CHG_ISET
13 3.3V_OUT
14 PowerSwitch
15 BAT_OUT
16 VBUdet
17 5.0V_IN
18 USB_DM
19 USB_DP
20 GND
40 GND
39 MCU_SPIM0_MISO/GPIO_19/TRACECLK
38 MCU_SPIM0_MOSI/GPIO_18/PWM2
37 MCU_SPIM0_CLK/GPIO_17/PWM1
36 MCU_SPIM0_CS_N/GPIO_16/PWM0
35 nReset
34 FLASH_ERASE
33 MCU_I2C0_CLK/CAPTURE3/GPIO_17
32 MCU_I2C0_DATA/CAPTURE2/GPIO_16
31 MCU_ADC24_SYNC
30 VADC
29 MCU_ADC_AIN5
28 MCU_ADC_AIN4
27 MCU_VREFL_ADC12
26 MCU_ADC_AIN3
25 MCU_ADC_AIN2
24 MCU_VREFH_ADC12
23 MCU_ADC_AIN1
22 MCU_ADC_AIN0
21 GND
Cerevo CDP-TZ01B-B
BlueNinja with Breakout
U1
U3
(16x2 Character LCD)
Akizuki AE-AQM1602A w/Pullup
+V
SCL
SDA
GND
fritzing