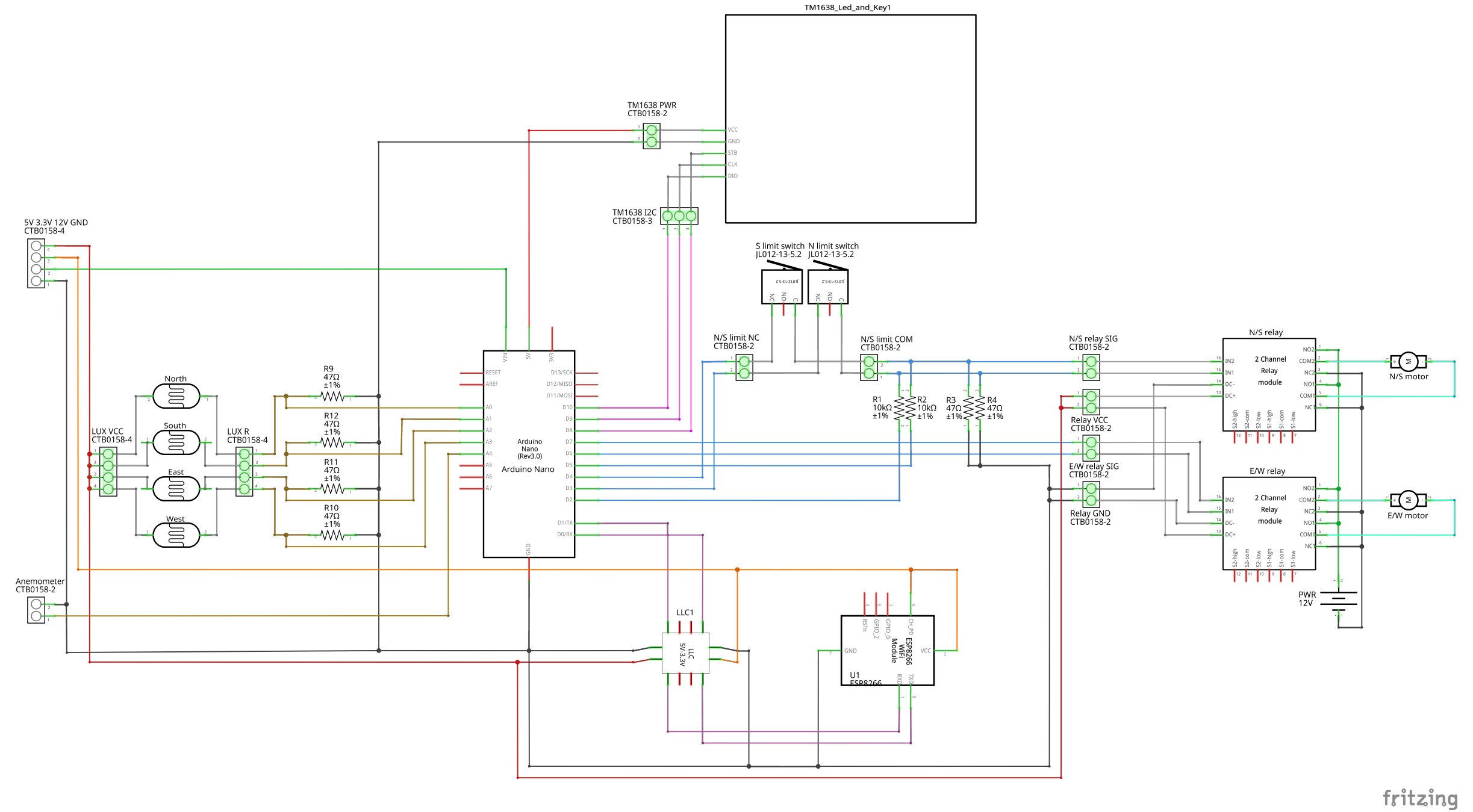
TM1638_Led_and_Key1
TM1638 PWR
CTB0158-2
VCC
GND
STB
CLK
DIO
TM1638 I2C
CTB0158-3
5V 3.3V 12V GND
CTB0158-4
S limit switch
JL012-13-5.2
N limit switch
JL012-13-5.2
N/S limit NC
CTB0158-2
N/S limit COM
CTB0158-2
N/S relay SIG
CTB0158-2
N/S relay
2 Channel
Relay
module
N/S motor
North
South
East
West
LUX VCC
CTB0158-4
LUX R
CTB0158-4
R9
47Ω
±1%
R12
47Ω
±1%
R11
47Ω
±1%
R10
47Ω
±1%
Arduino
Nano
(Rev3.0)
Arduino Nano
R1
10kΩ
±1%
R2
10kΩ
±1%
R3
47Ω
±1%
R4
47Ω
±1%
Relay VCC
CTB0158-2
E/W relay SIG
CTB0158-2
Relay GND
CTB0158-2
E/W relay
E/W motor
PWR
12V
Anemometer
CTB0158-2
LLC1
LLC
5V-3.3V
U1
ESP8266
ESP8266
WiFi
Module
fritzing