Filter Coeffs: $a0 = -0.0312$ $a1 = -0.0547$ $a2 = -0.0039$ $a3 = 0.0781$ $a4 = 0.2031$ $a5 = 0.2852$

$N = 11$ $a6 = 0.2852$ $a7 = 0.2031$ $a8 = 0.0781$ $a9 = -0.0039$ $a10 = -0.0547$ $a11 = -0.0312$

$\xrightarrow{\text{scaled}}$ (so we deal with integers) $a_{max} = 0.2852$, $-127 \leq X(n) \leq 127$ $\Big\}$ $a_{scaled} = a_{max} \cdot 2^k < 127$ $\Big\}$ $\log_2 \frac{127}{0.2852} = 8.79 \rightarrow$ add 8 bits

8 bits $\rightarrow 2^8 - 1$

$(a \times 2^8)$

$\rightarrow$ Scaled Coeffs.: A = [-8 -14 -1 20 52 73 73 52 20 -1 -14 -8] $\longrightarrow$ symmetric
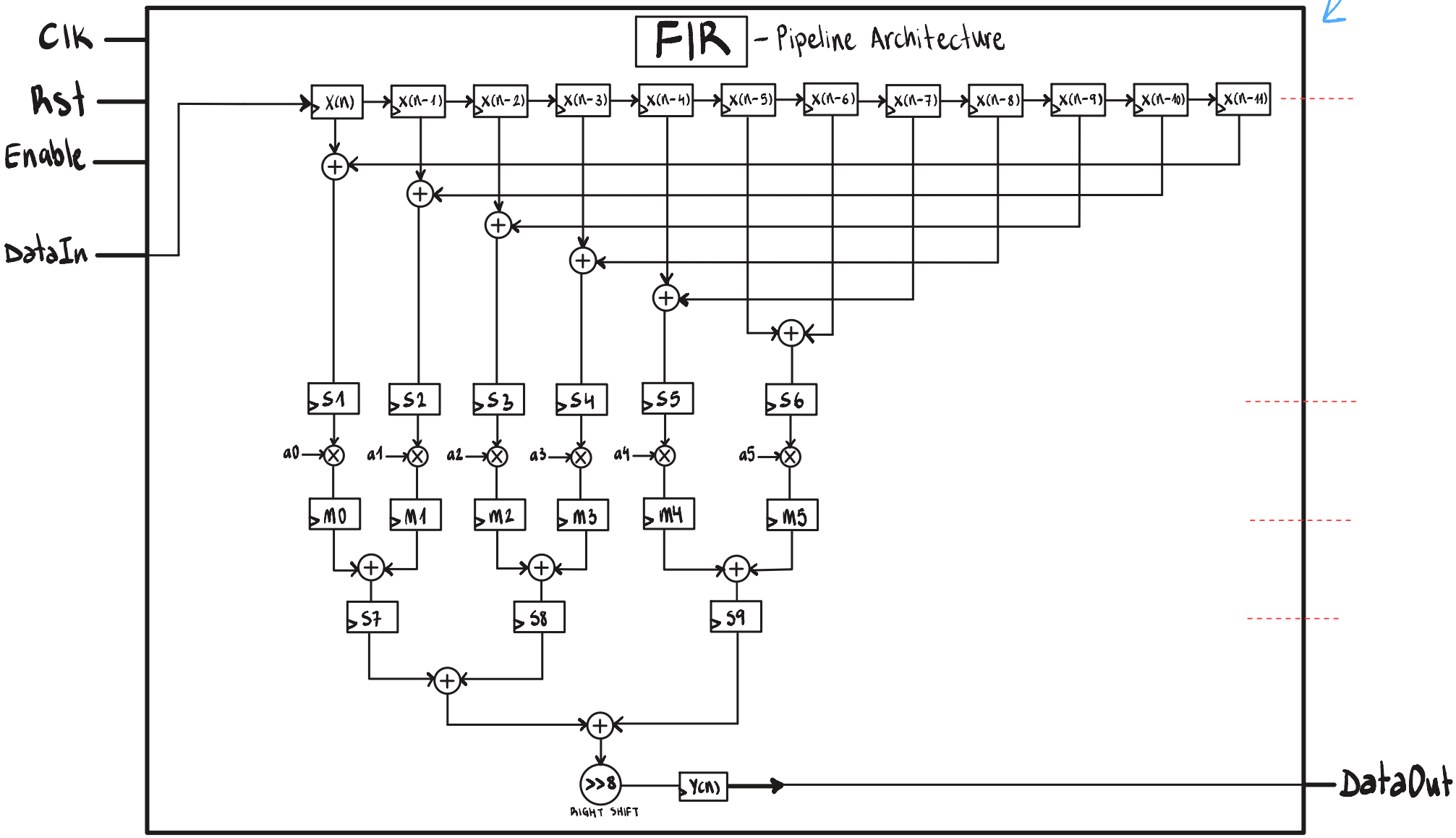
a5 a4 a3 a2 a1 a0