Miniaturized Mobile Robot for Educational Applications in Logistics

CROS 2026 - Brazilian Conference on Robotics

João Pessoa, Brazil

April 27–30, 2026

César Grossl (UTFPR)
Dieisson Martinelli (UDESC)
Vivian Cremer Kalempa (UDESC)
André Schneider de Oliveira (UTFPR)

UDESC UNIVERSIDADE DO ESTADO DE SANTA CATARINA

UTFPR UNIVERSIDADE TECNOLÓGICA FEDERAL DO PARANÁ CAMPUS CURITIBA

Motivation

- Internal logistics still relies on human-operated forklifts.
- Material handling is subject to errors, safety risks, and inefficiencies.
- Autonomous mobile robots can improve repeatability and operational support.
- A miniaturized prototype provides a practical platform for education and research.

UDESC UNIVERSIDADE DO ESTADO DE SANTA CATARINA

UTFPR UNIVERSIDADE TECNOLÓGICA FEDERAL DO PARANÁ CAMPUS CURITIBA

Objective

- Design and develop a miniaturized robotic platform for logistics.
- Integrate LiDAR, ultrasonic sensors, and ROS 2 for perception and navigation.
- Experimentally validate the system using SLAM.

UDESC UNIVERSIDADE DO ESTADO DE SANTA CATARINA

UTFPR UNIVERSIDADE TECNOLÓGICA FEDERAL DO PARANÁ CAMPUS CURITIBA

Prototype Design and Fabrication

- The chassis was designed in CAD and 3D printed in PLA.
- The miniaturized prototype uses four DC motors for differential drive and one motor for fork lifting.
- Its compact dimensions of 24 cm in length, 22 cm in height, and 1.35 kg in mass make it suitable for reduced-scale experimental validation.

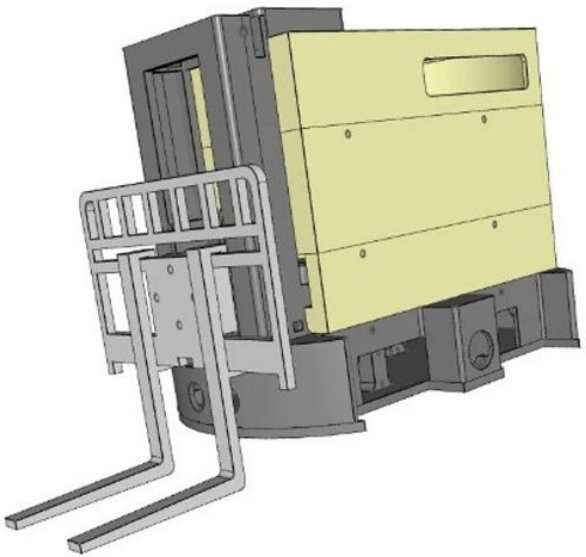

Robot design

UDESC UNIVERSIDADE DO ESTADO DE SANTA CATARINA

UTFPR UNIVERSIDADE TECNOLÓGICA FEDERAL DO PARANÁ CAMPUS CURITIBA

Hardware Components

- Raspberry Pi 4 as central processing unit.
- LiDAR (RPLiDAR C1) for mapping and navigation.
- Ultrasonic sensors for obstacle detection.
- Intel RealSense D435i for depth perception and pallet detection.
- DC motors and encoders for movement and odometry.
- Motor drivers (TB6612FNG and L298N) for motion and fork control.
- Supporting components: power bank, limit switch, buzzer, and connector

Physical prototype of the mobile robot

UDESC UNIVERSIDADE DO ESTADO DE SANTA CATARINA

UTFPR UNIVERSIDADE TECNOLÓGICA FEDERAL DO PARANÁ CAMPUS CURITIBA

Mapping (SLAM)

- LiDAR-based 2D environment mapping
- Real-time data acquisition via ROS 2 (/scan topic)
- Map generation and localization using RViz2
- Integration with odometry for position estimation

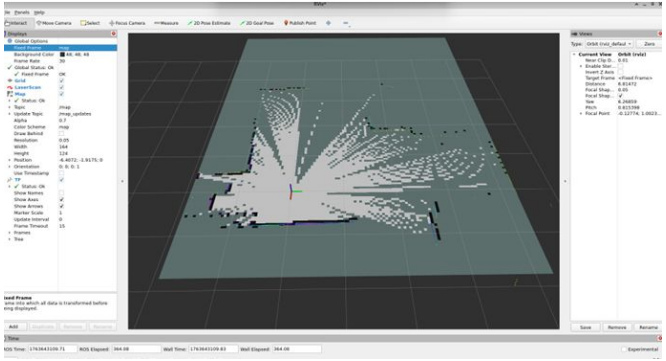

RViz2 visualization of LiDAR-based SLAM

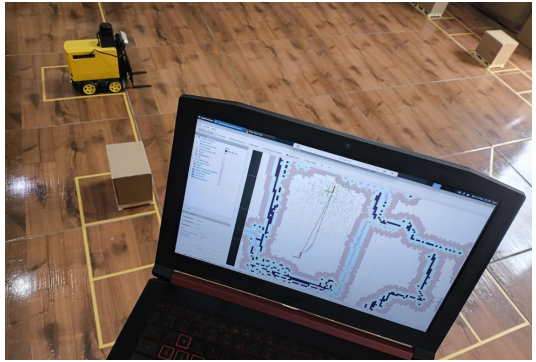

Experimental mapping environment

UDESC UNIVERSIDADE DO ESTADO DE SANTA CATARINA

UTFPR UNIVERSIDADE TECNOLÓGICA FEDERAL DO PARANÁ CAMPUS CURITIBA

Tests and Validation

- Assembly tests were performed to verify the correct positioning of mechanical and electronic components.
- Individual validation of sensors, motors, and control modules was carried out before full integration.
- Movement tests were conducted to adjust motor control and calibrate odometry.
- Obstacle detection tests were performed using front, rear, and side ultrasonic sensors.
- SLAM mapping and navigation were validated in RViz using 2D Pose Estimate and Nav2 Goal.

UDESC UNIVERSIDADE DO ESTADO DE SANTA CATARINA

UTFPR UNIVERSIDADE TECNOLÓGICA FEDERAL DO PARANÁ CAMPUS CURITIBA

Prototype Demonstration Video

- SLAM-Based Mapping Experiment
- Obstacle Avoidance Experiment

YouTube: https://youtu.be/EFHZ58ks7_c

UDESC UNIVERSIDADE DO ESTADO DE SANTA CATARINA

UTFPR UNIVERSIDADE TECNOLÓGICA FEDERAL DO PARANÁ CAMPUS CURITIBA

Conclusion

- The proposed prototype demonstrated the feasibility of a miniaturized mobile robot for logistics applications.
- The system successfully integrated sensors, embedded electronics, and ROS 2 architecture.
- Initial experiments validated SLAM-based mapping, obstacle detection, and navigation.
- The platform showed potential for educational and research applications in robotics and logistics.

UDESC UNIVERSIDADE DO ESTADO DE SANTA CATARINA

UTFPR UNIVERSIDADE TECNOLÓGICA FEDERAL DO PARANÁ CAMPUS CURITIBA

Future Work

- Improve odometry accuracy and navigation stability.
- Enhance SLAM performance for more accurate environment mapping.
- Implement pallet detection using the Intel RealSense D435i camera.

UDESC UNIVERSIDADE DO ESTADO DE SANTA CATARINA

UTFPR UNIVERSIDADE TECNOLÓGICA FEDERAL DO PARANÁ CAMPUS CURITIBA

Thank You for Your Attention

Questions?

UDESC UNIVERSIDADE DO ESTADO DE SANTA CATARINA

UTFPR UNIVERSIDADE TECNOLÓGICA FEDERAL DO PARANÁ CAMPUS CURITIBA