REVISION HISTORY								
DATE	REV	CHG	ZONE	DESCRIPTION	ECR NO	DR	APVD 1	APVD 2

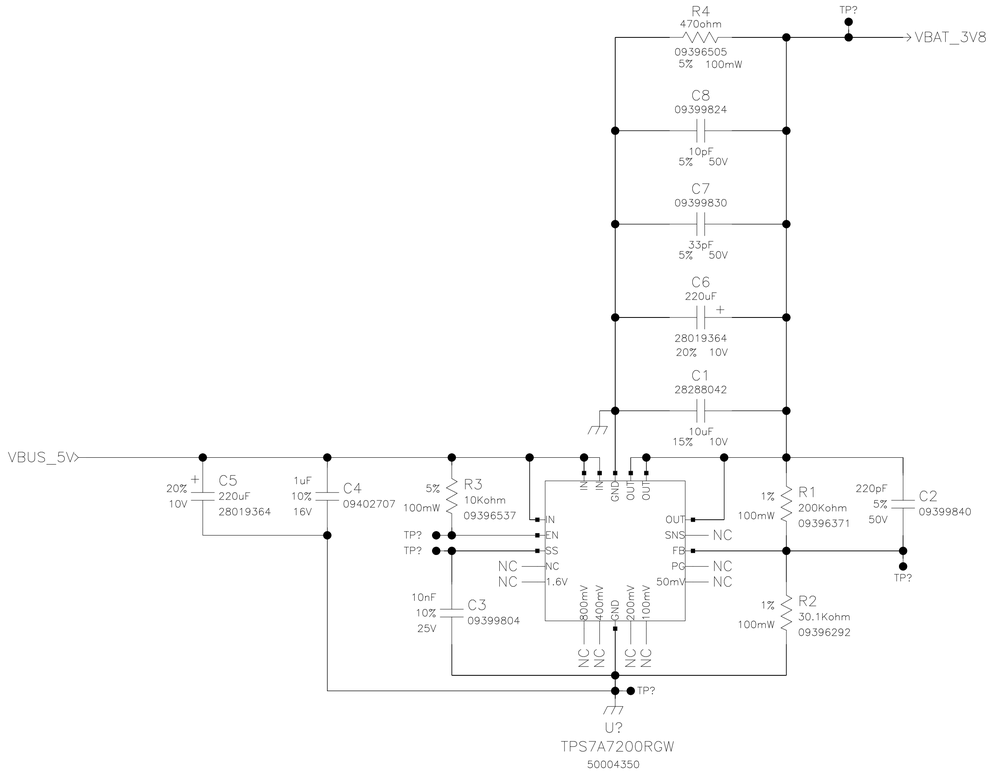

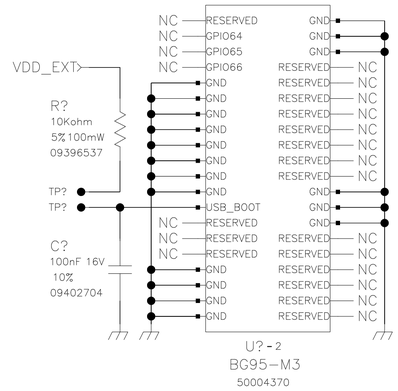

VBAT should be routed in star structure to VBAT_BB and VBAT_RF pins.

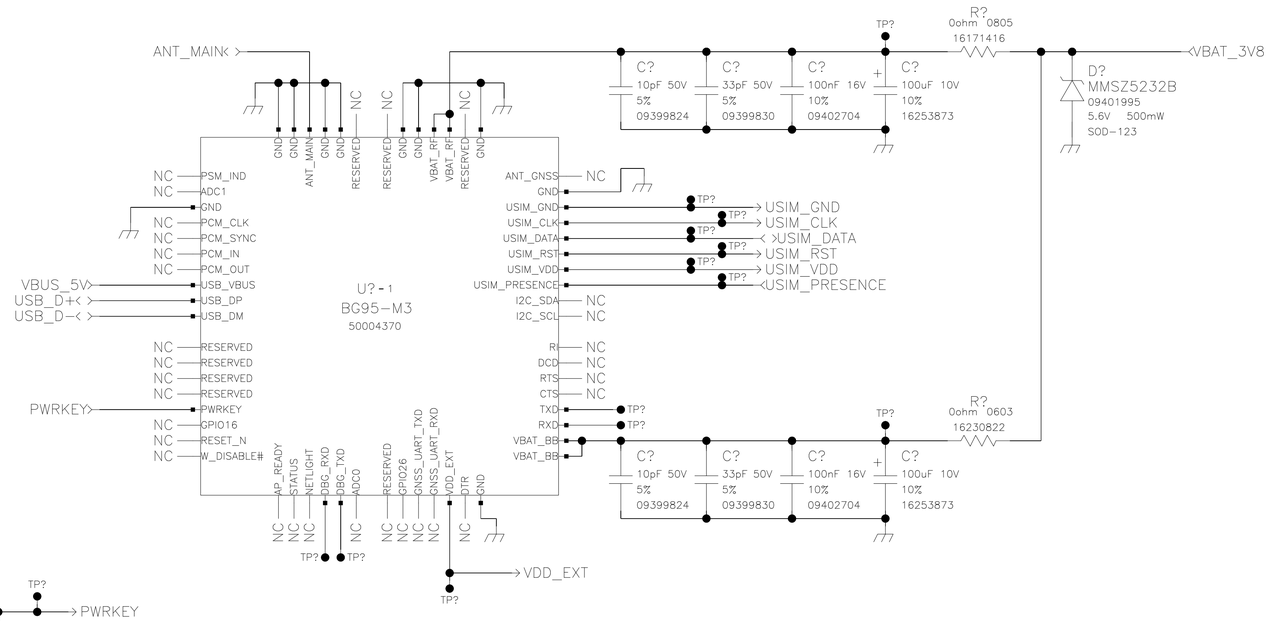

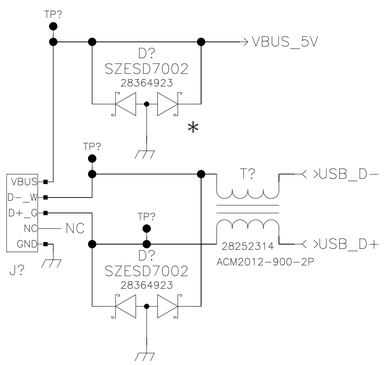

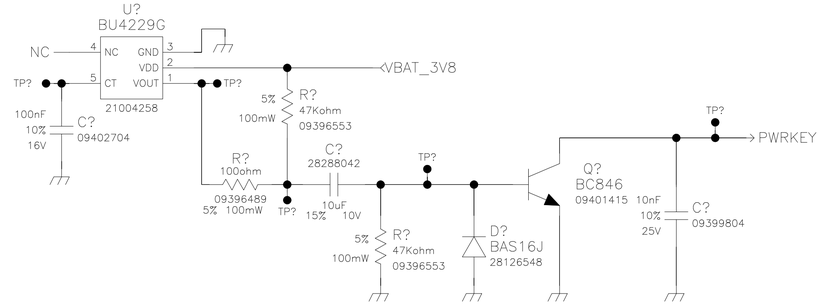

ASEGURAR BUEN RETORNO DE USIM_GND AL MODULO

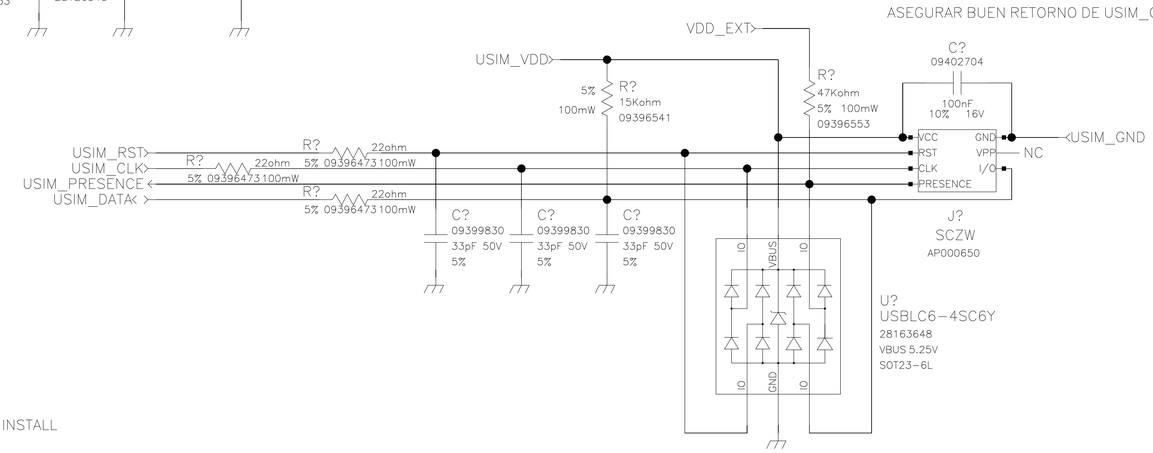

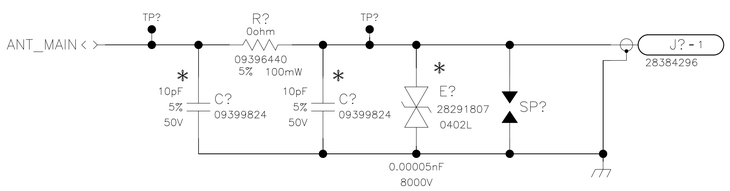

* DO NOT INSTALL

	SIGNATURE	DATE
DR		
APVD1		
APVD2		
APVD3		
APVD4		
APVD5		

SUBSTANCES AND RECYCLED CONTENT SHALL BE ACCORDING FAMRR QS XXXXX

MATERIAL
SEE ITEM LIST

DRAWING NAME

DRAWING NUMBER
40000410

@PRINTORDER

SIZE | SCALE | SHEET NO
@Sheet of @SheetTotal

CLASS: PRESIDIOC TYPE: SCHEMATIC