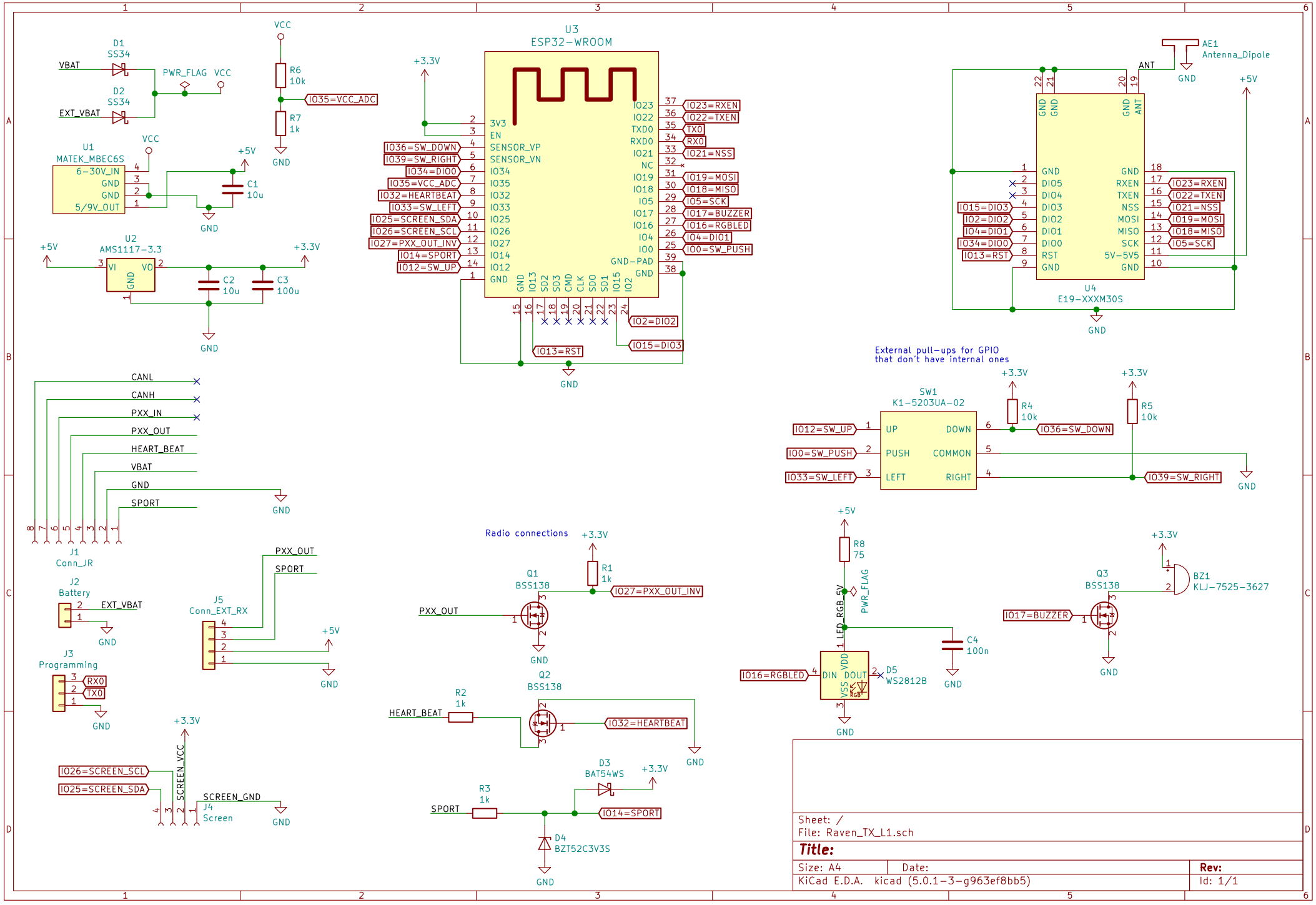
U3
ESP32-WROOM
3V3
EN
SENSOR_VP
SENSOR_VN
IO34
IO35
IO32
IO33
IO25
IO26
IO27
IO14
IO12
GND
IO23
IO22
TXD0
RXD0
IO21
NC
IO19
IO18
IO5
IO17
IO16
IO4
IO0
GND-PAD
GND
IO36=SW_DOWN
IO39=SW_RIGHT
IO34=DIO0
IO35=VCC_ADC
IO32=HEARTBEAT
IO33=SW_LEFT
IO25=SCREEN_SDA
IO26=SCREEN_SCL
IO27=PXX_OUT_INV
IO14=SPORT
IO12=SW_UP
IO23=RXEN
IO22=TXEN
TX0
RX0
IO21=NSS
IO19=MOSI
IO18=MISO
IO5=SCK
IO17=BUZZER
IO16=RGBLED
IO4=DIO1
IO0=SW_PUSH
IO2=DIO2
IO13=RST
IO15=DIO3
U4
E19-XXXM30S
GND
DIO5
DIO4
DIO3
DIO2
DIO1
DIO0
RST
RXEN
TXEN
NSS
MOSI
MISO
SCK
5V-5V5
ANT
AE1
Antenna_Dipole
U1
MATEK_MBEC6S
6-30V_IN
5/9V_OUT
U2
AMS1117-3.3
VI
VO
D1
SS34
D2
SS34
VBAT
EXT_VBAT
PWR_FLAG
VCC
R6
10k
R7
1k
C1
10u
C2
10u
C3
100u
+5V
+3.3V
External pull-ups for GPIO
that don't have internal ones
SW1
K1-5203UA-02
UP
PUSH
LEFT
DOWN
COMMON
RIGHT
R4
10k
R5
10k
CANL
CANH
PXX_IN
PXX_OUT
HEART_BEAT
VBAT
GND
SPORT
J1
Conn_JR
J2
Battery
EXT_VBAT
J3
Programming
RX0
TX0
J5
Conn_EXT_RX
Radio connections
Q1
BSS138
R1
1k
Q2
BSS138
R2
1k
HEART_BEAT
IO32=HEARTBEAT
D3
BAT54WS
R3
1k
D4
BZT52C3V3S
IO14=SPORT
IO27=PXX_OUT_INV
R8
75
LED_RGB_5V
C4
100n
IO16=RGBLED
DIN
DOUT
VDD
VSS
D5
WS2812B
Q3
BSS138
IO17=BUZZER
BZ1
KLJ-7525-3627
IO26=SCREEN_SCL
IO25=SCREEN_SDA
SCREEN_VCC
SCREEN_GND
J4
Screen
Sheet: /
File: Raven_TX_L1.sch
Title:
Size: A4
Date:
Rev:
KiCad E.D.A. kicad (5.0.1-3-g963ef8bb5)
Id: 1/1