MCU

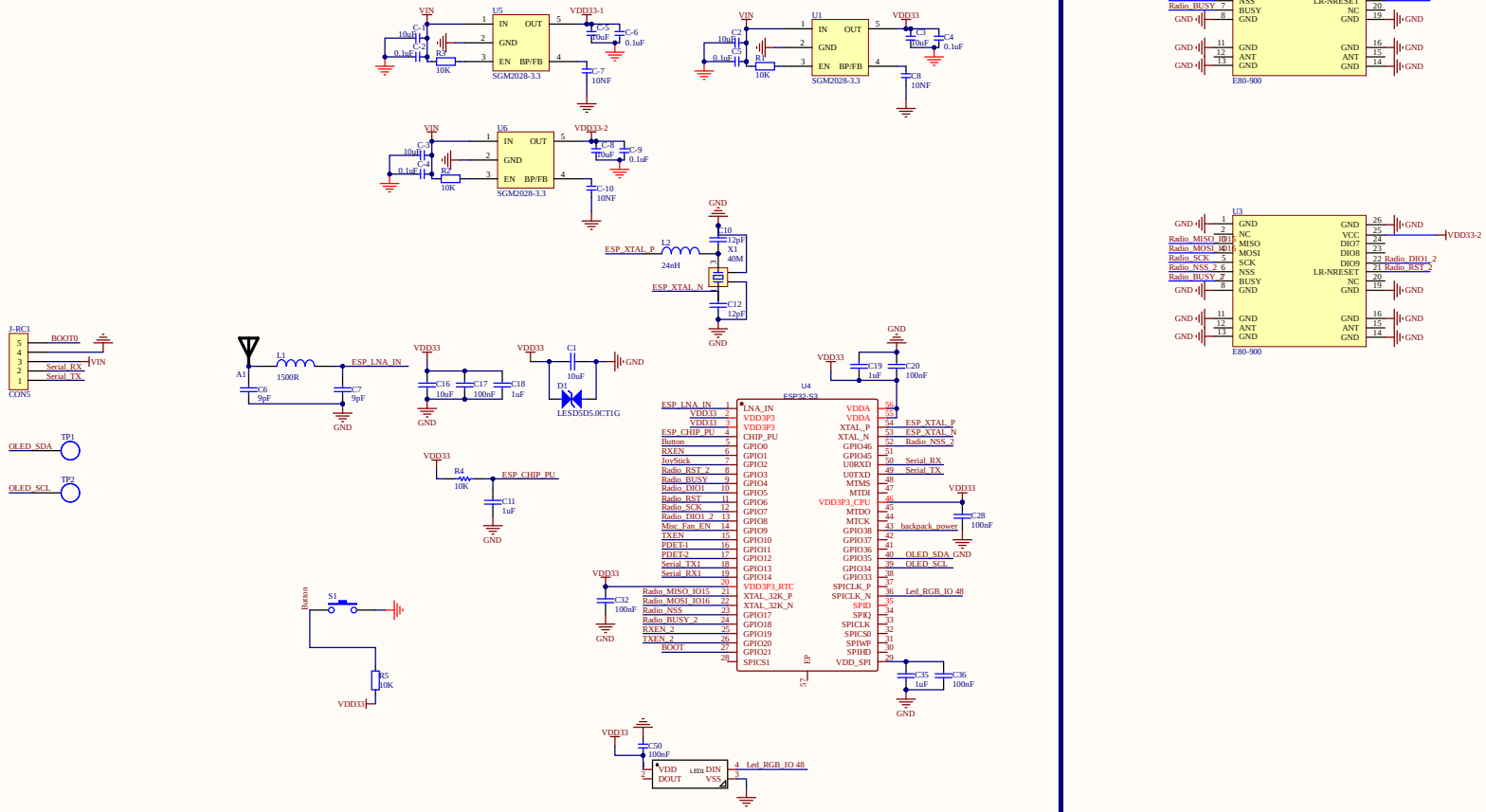

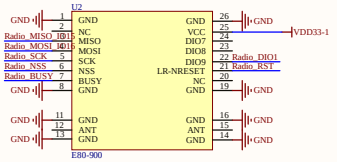

Title		
Size A2	Number	Revision
Date: 9-29-2024		Sheet of
File: C:\Users\..\DIY GemX.SchDoc		Drawn By:

Board Stack Report