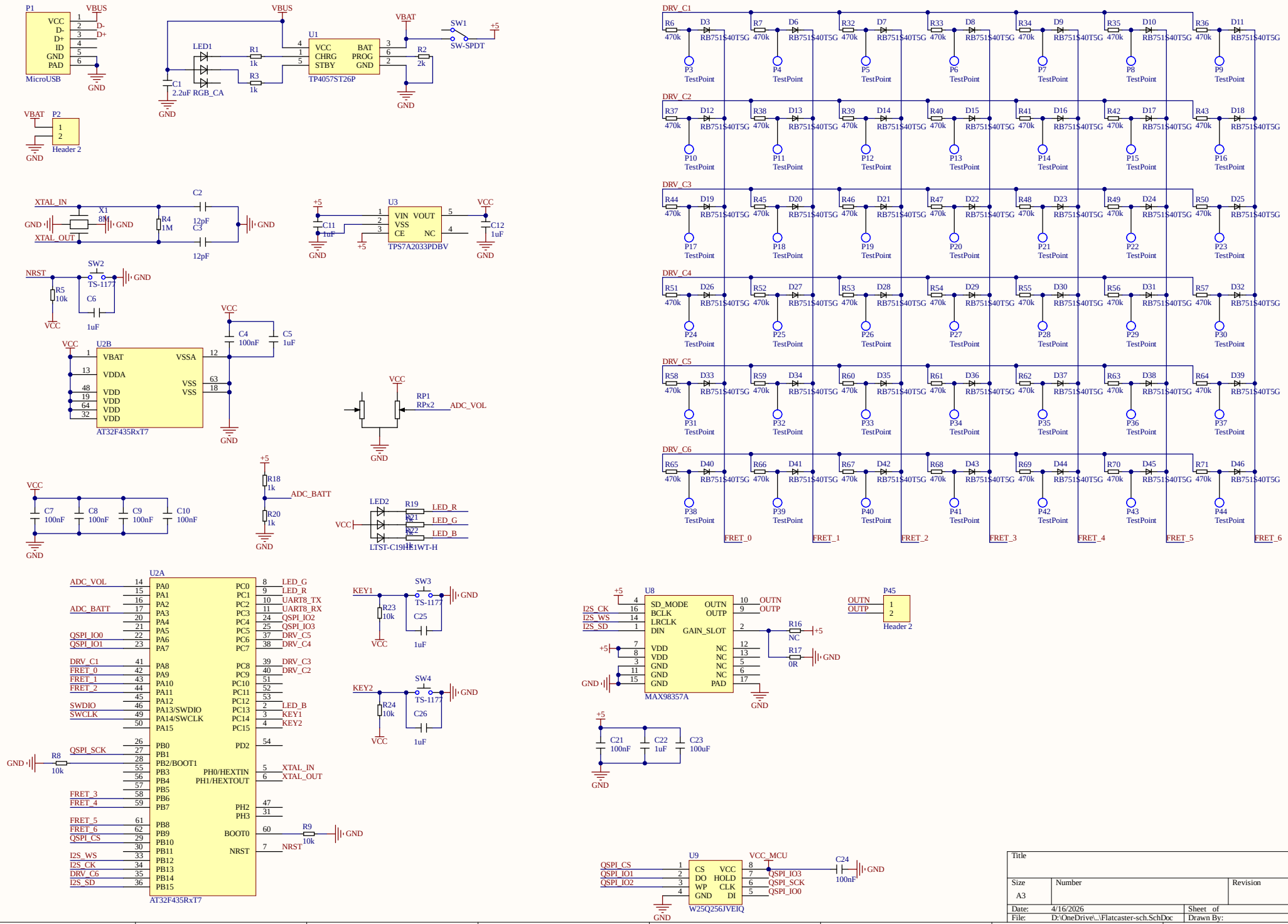
P1
VCC
D-
D+
ID
GND
PAD
MicroUSB
VBUS
GND
LED1
R1 1k
R3 1k
C1 2.2uF
RGB_CA
U1
VCC
CHRG
STBY
BAT
PROG
GND
TP4057ST26P
VBAT
SW1
SW-SPDT
+5
R2 2k
P2
Header 2
XTAL_IN
XTAL_OUT
X1 8M
R4 1M
C2 12pF
C3 12pF
U3
VIN
VSS
CE
VOUT
NC
TPS7A2033PDBV
C11 1uF
C12 1uF
NRST
SW2
TS-1177
R5 10k
C6 1uF
U2B
VBAT
VDDA
VDD
VSSA
VSS
AT32F435RxT7
C4 100nF
C5 1uF
RP1
RPx2
ADC_VOL
C7 100nF
C8 100nF
C9 100nF
C10 100nF
R18 1k
R20 1k
ADC_BATT
LED2
R19
R21
R22
LED_R
LED_G
LED_B
LTST-C19HE1WT-H
U2A
PA0
PA1
PA2
PA3
PA4
PA5
PA6
PA7
PA8
PA9
PA10
PA11
PA12
PA13/SWDIO
PA14/SWCLK
PA15
PB0
PB1
PB2/BOOT1
PB3
PB4
PB5
PB6
PB7
PB8
PB9
PB10
PB11
PB12
PB13
PB14
PB15
PC0
PC1
PC2
PC3
PC4
PC5
PC6
PC7
PC8
PC9
PC10
PC11
PC12
PC13
PC14
PC15
PD2
PH0/HEXTIN
PH1/HEXTOUT
PH2
PH3
BOOT0
NRST
UART8_TX
UART8_RX
QSPI_IO2
QSPI_IO3
DRV_C5
DRV_C4
DRV_C3
DRV_C2
KEY1
KEY2
SW3
SW4
R23 10k
R24 10k
C25 1uF
C26 1uF
QSPI_SCK
R8 10k
R9 10k
I2S_CK
I2S_WS
I2S_SD
U8
SD_MODE
BCLK
LRCLK
DIN
GAIN_SLOT
OUTN
OUTP
MAX98357A
R16 NC
R17 0R
P45
Header 2
C21 100nF
C22 1uF
C23 100uF
U9
CS
DO
WP
GND
VCC
HOLD
CLK
DI
W25Q256JVEIQ
VCC_MCU
C24 100nF
QSPI_IO1
QSPI_IO0
DRV_C1
DRV_C2
DRV_C3
DRV_C4
DRV_C5
DRV_C6
R6 470k
D3 RB751S40T5G
P3 TestPoint
FRET_0
FRET_1
FRET_2
FRET_3
FRET_4
FRET_5
FRET_6
Title
Size
A3
Number
Revision
Date: 4/16/2026
Sheet of
File: D:\OneDrive\..\Flatcaster-sch.SchDoc
Drawn By:

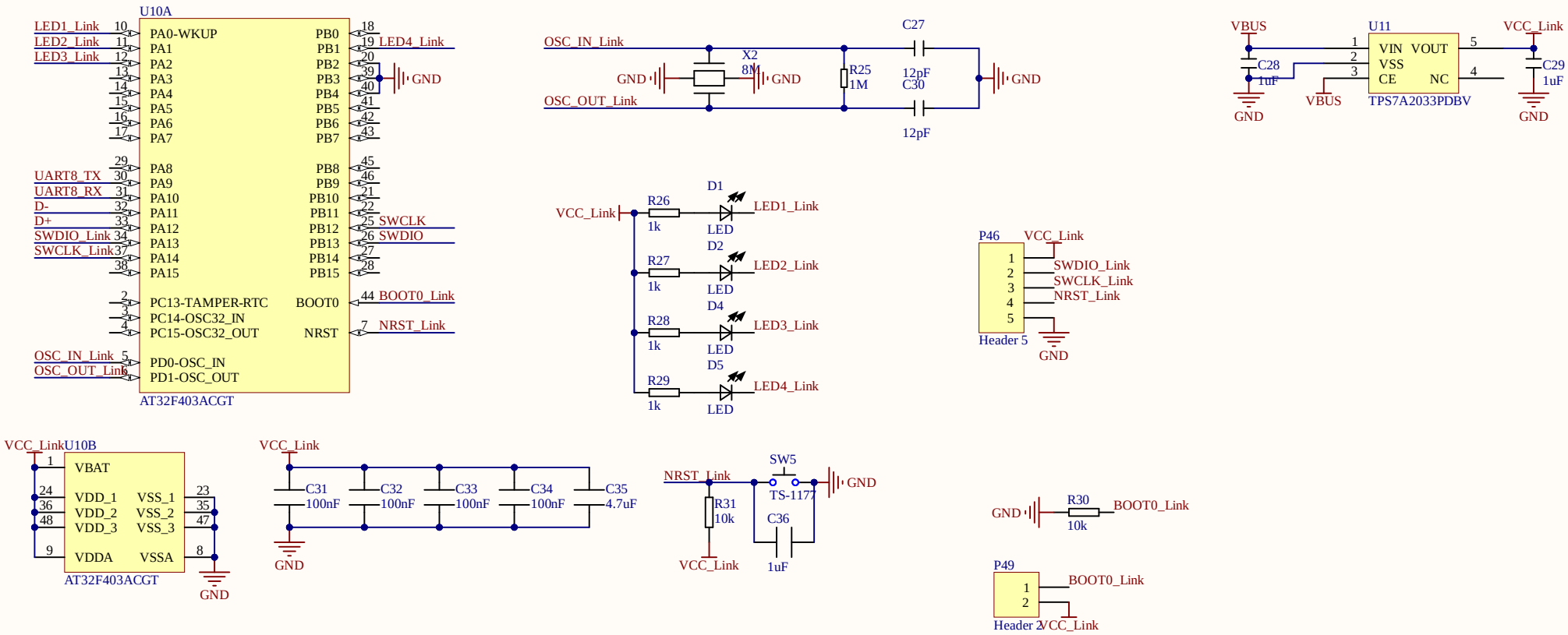

Title		
Size A4	Number	Revision
Date: 4/16/2026	Sheet of	
File: D:\OneDrive\..\Flatcaster-Link-sch.SchDoc	Drawn By:	

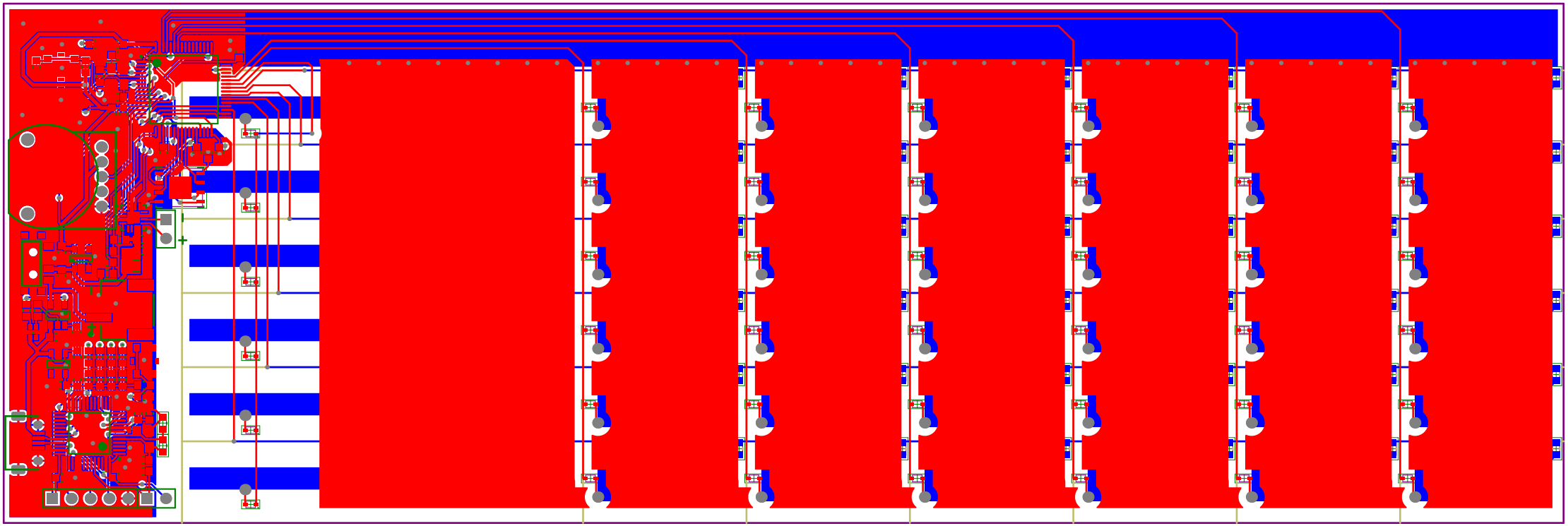

Comment	Description	Designator	Footprint	LibRef	Quantity
2.2uF		C1	0603-Cap	Cap	1
12pF		C2, C3, C27, C30	0603-Cap	Cap	4
100nF		C4, C7, C8, C9, C10, C21, C24, C31, C32, C33, C34	0603-Cap	Cap	11
1uF		C5, C6, C11, C12, C22, C25, C26, C28, C29, C36	0603-Cap	Cap	10
100uF		C23	1206-C	Cap	1
4.7uF		C35	0603-Cap	Cap	1
LED		D1, D2, D4, D5	0603-1	LED	4
RB751S40T5G		D3, D6, D7, D8, D9, D10, D11, D12, D13, D14, D15, D16, D17, D18, D19, D20, D21, D22, D23, D24, D25, D26, D27, D28, D29, D30, D31, D32, D33, D34, D35, D36, D37, D38, D39, D40, D41, D42, D43, D44, D45, D46	SOD-523	Diode	42
RGB_CA		LED1	RGB1.6*1.6	RGB_CA	1
LTST-C19HE1WT-H	C427425	LED2	RGB1.6*1.6	RGB_CA	1
MicroUSB		P1	MicroUSB	MicroUSB	1
Header 2	Header, 2-Pin	P2	SH2.0 2P	Header 2	1
TestPoint		P3, P4, P5, P6, P7, P8, P9, P10, P11, P12, P13, P14, P15, P16, P17, P18, P19, P20, P21, P22, P23, P24, P25, P26, P27, P28, P29, P30, P31, P32, P33, P34, P35, P36, P37, P38, P39, P40, P41, P42, P43, P44	TestPoint	TestPoint	42
Header 2	Header, 2-Pin	P45, P49	HDR1X2	Header 2	2
Header 5	Header, 5-Pin	P46	HDR1X5	Header 5	1
1k		R1, R3, R18, R19, R20, R21, R22, R26, R27, R28, R29	0603	Res	11
2k		R2	0603	Res	1
1M		R4, R25	0603	Res	2
10k		R5, R8, R9, R23, R24, R30, R31	0603	Res	7
470k		R6, R7, R32, R33, R34, R35, R36, R37, R38, R39, R40, R41, R42, R43, R44, R45, R46, R47, R48, R49, R50, R51, R52, R53, R54, R55, R56, R57, R58, R59, R60, R61, R62, R63, R64, R65, R66, R67, R68, R69, R70, R71	0603	Res	42
NC		R16	0603	Res	1
0R		R17	0603	Res	1
RPx2		RP1	RK10J	RPx2	1
SW-SPDT	C514014	SW1	TA-3524A-A1	SW-SPDT	1
TS-1177	C561512	SW2, SW3, SW4, SW5	BTN3*3	Btn	4
TP4057ST26P		U1	SOT236	TP4057ST26P	1
AT32F435RxT7		U2	LQFP-64	AT32F435RxT7	1
TPS7A2033PDBV		U3, U11	SOT23-5	ME6211	2
MAX98357A		U8	QFN16-0.5-1.1PAD	MAX98357A	1
W25Q256JVEIQ		U9	WPDFN-8-6x5	W25QxxxVE/A	1
AT32F403ACGT		U10	STM-LQFP48_N	STM32F103CBT6	1
8M	C2682774	X1, X2	XTAL-3225-4P	XTAL-4LEAD	2