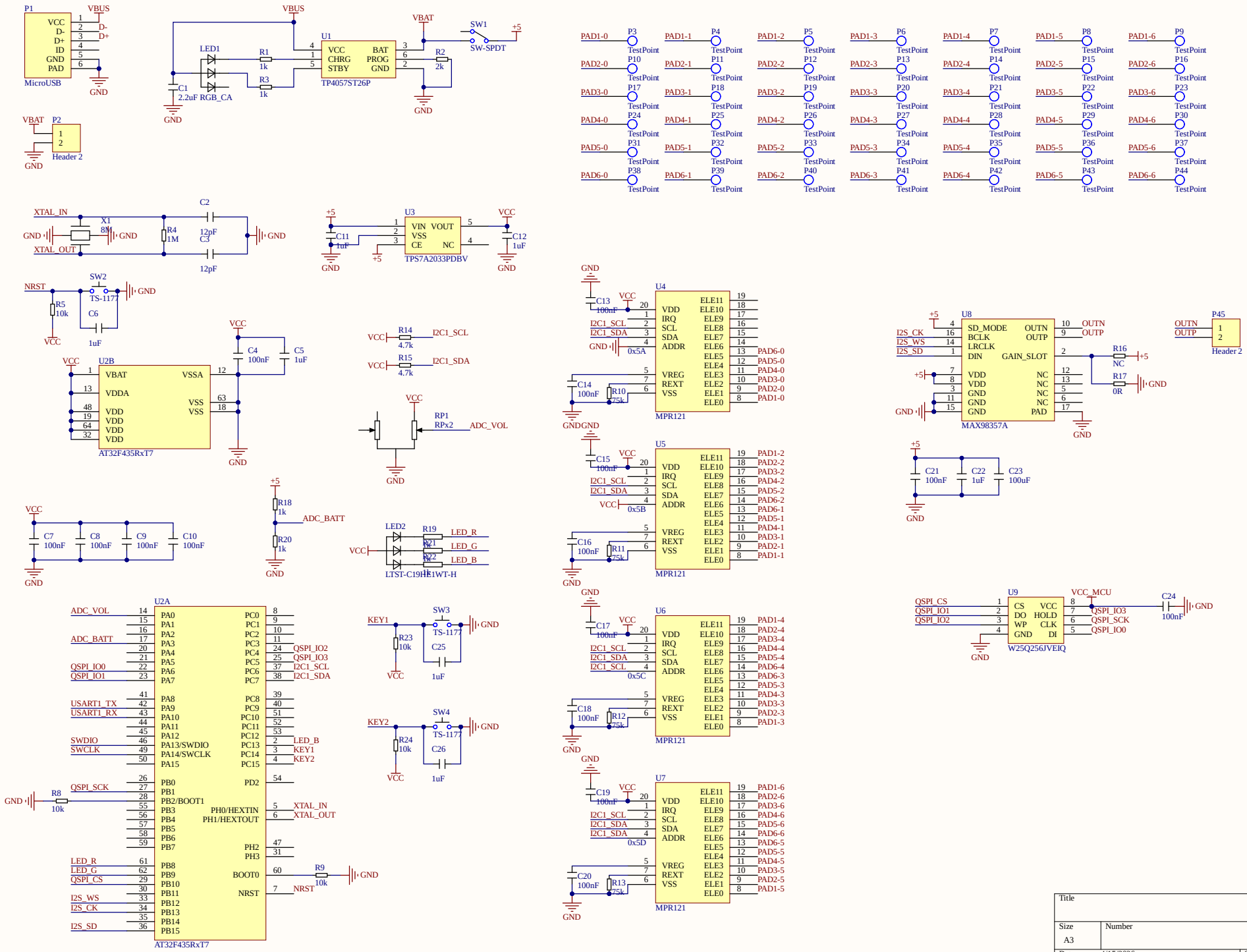

Title		
Size A3	Number	Revision
Date: 4/15/2026	Sheet of	
File: D:\OneDrive\..\Flatcaster-sch.SchDoc	Drawn By:	

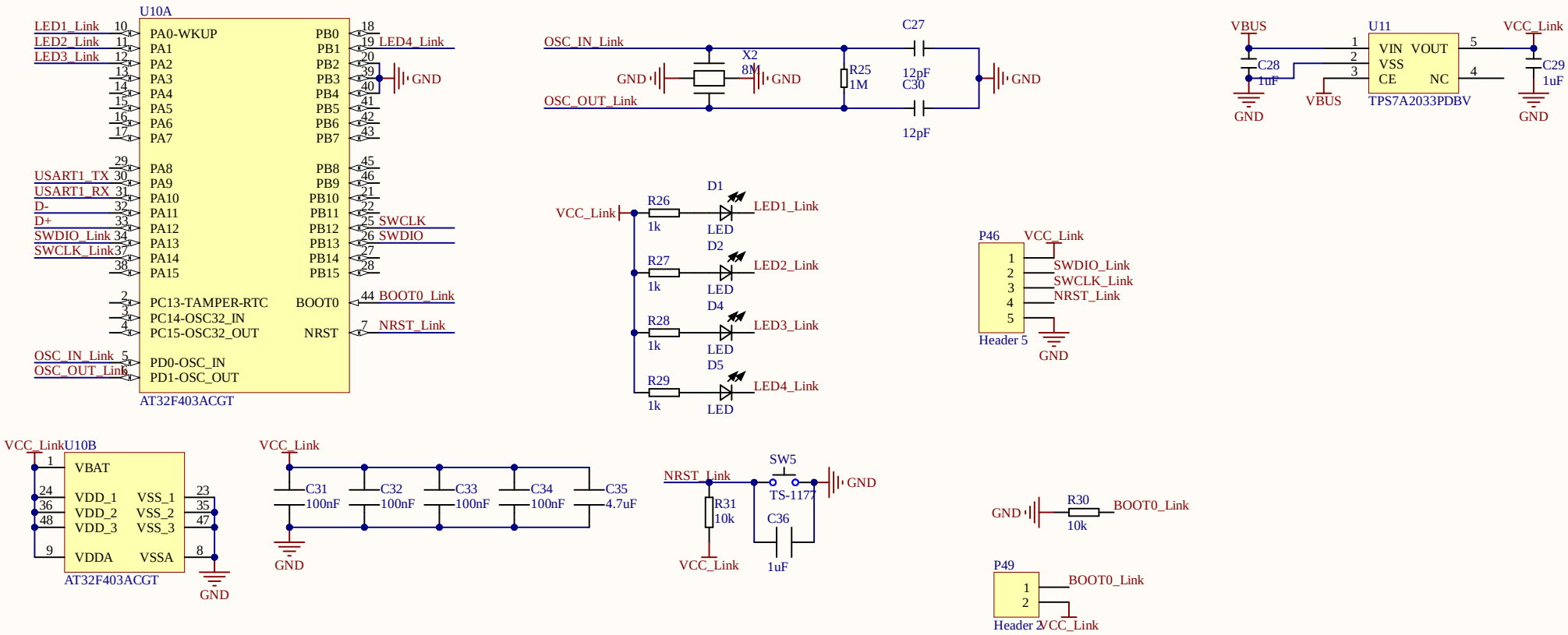

Title		
Size A4	Number	Revision
Date: 4/15/2026	Sheet of	
File: D:\OneDrive\..\Flatcaster-Link-sch.SchDoc	Drawn By:	

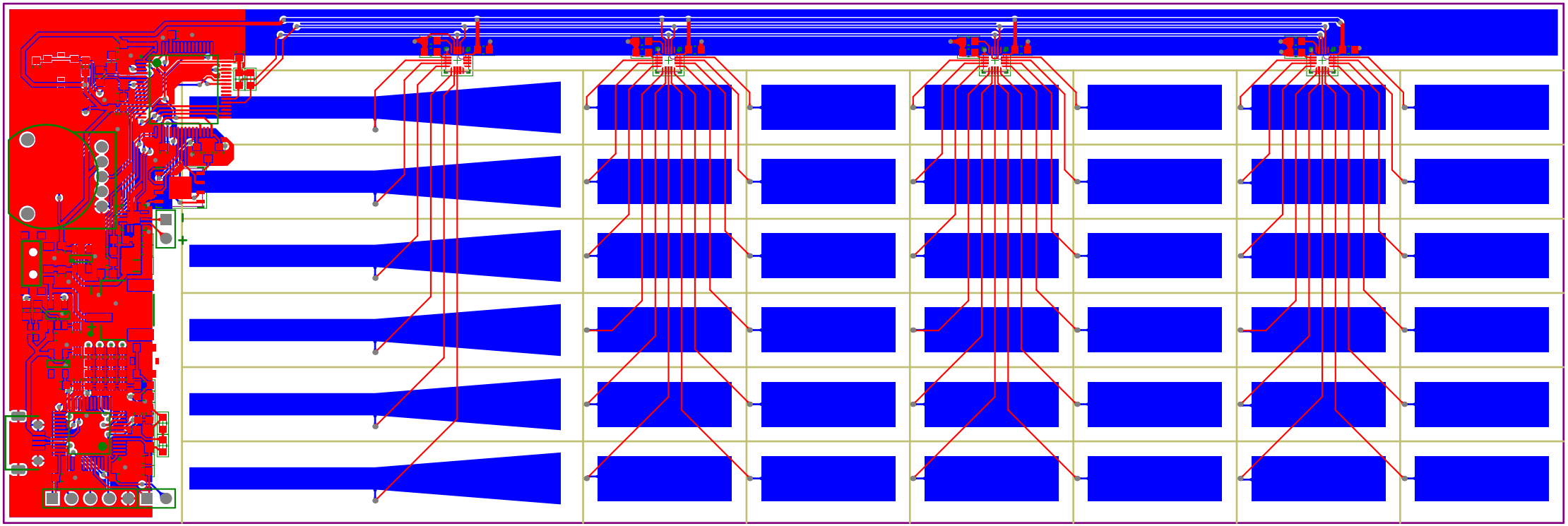

Comment	Description	Designator	Footprint	LibRef	Quantity
2.2uF		C1	0603-Cap	Cap	1
12pF		C2, C3, C27, C30	0603-Cap	Cap	4
100nF		C4, C7, C8, C9, C10, C13, C14, C15, C16, C17, C18, C19, C20, C21, C24, C31, C32, C33, C34	0603-Cap	Cap	19
1uF		C5, C6, C11, C12, C22, C25, C26, C28, C29, C36	0603-Cap	Cap	10
100uF		C23	1206-C	Cap	1
4.7uF		C35	0603-Cap	Cap	1
LED		D1, D2, D4, D5	0603-1	LED	4
RGB_CA		LED1	RGB1.6*1.6	RGB_CA	1
LTST-C19HE1WT-H	C427425	LED2	RGB1.6*1.6	RGB_CA	1
MicroUSB		P1	MicroUSB	MicroUSB	1
Header 2	Header, 2-Pin	P2	SH2.0 2P	Header 2	1
TestPoint		P3, P4, P5, P6, P7, P8, P9, P10, P11, P12, P13, P14, P15, P16, P17, P18, P19, P20, P21, P22, P23, P24, P25, P26, P27, P28, P29, P30, P31, P32, P33, P34, P35, P36, P37, P38, P39, P40, P41, P42, P43, P44	TestPoint	TestPoint	42
Header 2	Header, 2-Pin	P45, P49	HDR1X2	Header 2	2
Header 5	Header, 5-Pin	P46	HDR1X5	Header 5	1
1k		R1, R3, R18, R19, R20, R21, R22, R26, R27, R28, R29	0603	Res	11
2k		R2	0603	Res	1
1M		R4, R25	0603	Res	2
10k		R5, R8, R9, R23, R24, R30, R31	0603	Res	7
75k		R10, R11, R12, R13	0603	Res	4
4.7k		R14, R15	0603	Res	2
NC		R16	0603	Res	1
0R		R17	0603	Res	1
RPx2		RP1	RK10J	RPx2	1
SW-SPDT	C514014	SW1	TA-3524A-A1	SW-SPDT	1
TS-1177	C561510	SW2, SW3, SW4, SW5	BTN3*3	Btn	4
TP4057ST26P		U1	SOT236	TP4057ST26P	1
AT32F435RxT7		U2	LQFP-64	AT32F435RxT7	1
TPS7A2033PDBV		U3, U11	SOT23-5	ME6211	2
MPR121		U4, U5, U6, U7	QFN20-3x3-0.4	MPR121	4
MAX98357A		U8	QFN16-0.5-1.1PAD	MAX98357A	1
W25Q256JVEIQ		U9	WPDFN-8-6x5	W25QxxxVE/A	1
AT32F403ACGT		U10	STM-LQFP48_N	STM32F103CBT6	1
8M	XL7EL89COI-111YLC-16M C2965579	X1, X2	XTAL-3225-4P	XTAL-4LEAD	2