Bus Logic

Christian Garry

March 2026

1 Introduction

Figure 1 shows the fundamental AND and OR gate primitives used in the design.

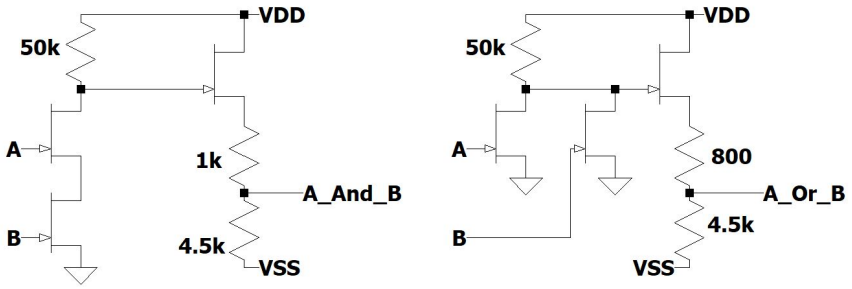

Figure 1: AND and OR gate primitives

2 Bus Architecture

Each output stage connected to the bus is implemented as a resistive divider between the supply rails (e.g. $+24\,\mathrm{V}$ and $-20\,\mathrm{V}$), with the bus tap taken from the midpoint of the divider. The logical behaviour is produced by a JFET which modulates one leg of this divider, shifting the midpoint voltage to represent a logic high or logic low.

A key consequence of this structure is that an "inactive" output is not electrically disconnected from the bus: it still presents a complete divider between the rails. If many such midpoint nodes are directly tied together, their dividers act in parallel and force the shared bus node toward the aggregate equilibrium voltage set by the majority of stages. In practical terms, even if a single enabled output attempts to drive the bus to a valid high level, a large number of other outputs sitting at their low-level bias will clamp the bus toward that low value, producing an intermediate voltage and preventing clean logic levels.

To avoid this rail-to-rail averaging effect, each source is first isolated and then combined using the multi-input OR-gate (MI-OR-Gate) structure shown in Figure 2. This ensures that the bus node is determined by the selected driver, rather than by the parallel combination of many rail dividers, thereby preserving signal integrity.

For simulation purposes in LTSpice, each gated output was connected to the gate of a single JFET. The JFET drain was tied to ground, while the source was connected to a labelled flag representing the corresponding bus line. The opposite end of the flag was connected to the driving logic primitive. This implementation is illustrated in Figure 3.

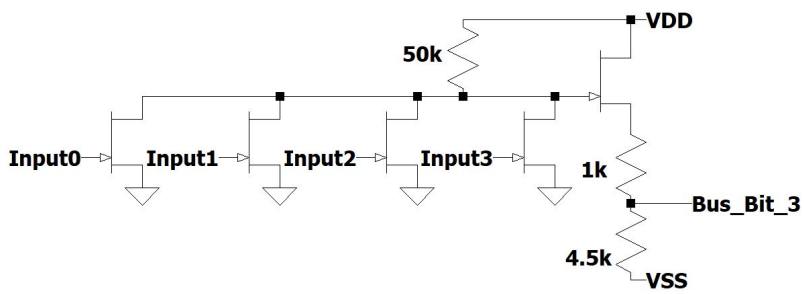

Figure 2: Equivalent multi-input OR gate for a bus line

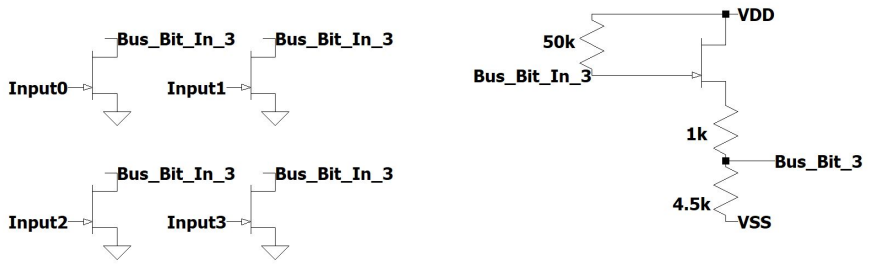

Figure 3: Multi-input OR gate implemented using LTSpice flags

3 Implementation Considerations

A practical issue encountered with large fan-in OR gates is degradation in signal integrity. As the number of inputs increases:

- Rise time increases,
- Output transitions become slower,
- The waveform becomes broadened and distorted,
- Overall timing margins are reduced.

To mitigate this, the bus architecture was partitioned. Instead of connecting all drivers directly to a single large OR gate, smaller grouped OR gates were used locally. Their outputs were then combined at a higher level.

This reduced the effective fan-in of any single gate connected to the main bus, improving transition sharpness and timing stability.

Although waveform smearing could be partially improved by adjusting resistor values, this introduced trade-offs in propagation delay and power characteristics.

The conceptual partitioned architecture is shown in Figure 4.

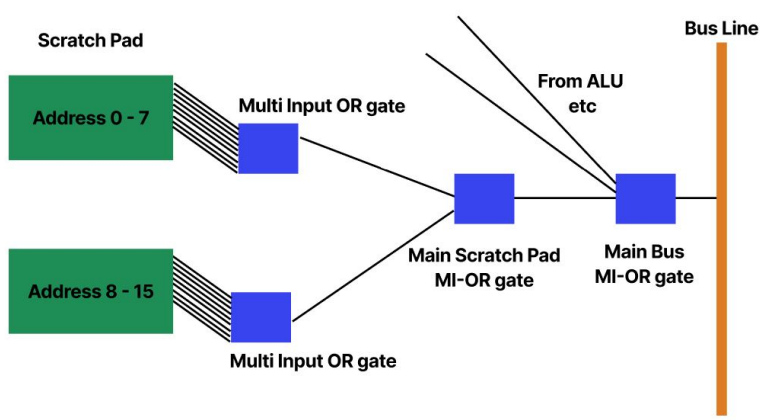

Figure 4: Partitioned multi-input OR gate architecture for improved bus performance

4 Output Control in More Detail

An example of this gating structure in practice is the scratchpad memory, which forms part of the internal register file of the Intel 4004. To read from the scratchpad, a specific register location must be selected via the address register. Each scratchpad register has both input and output connections to the main bus.

The scratchpad output logic operates in two stages.

First, a global "Enable Output" control signal determines whether the scratchpad as a whole is permitted to drive the bus.

Second, individual register selection is performed by ANDing:

- the global output-enable signal,
- the decoded address corresponding to the selected register, and
- the stored value within that register.

Only when the correct address is selected and the global enable is asserted does the corresponding AND stage produce a logic '1'. All other registers produce a logic '0'. Importantly, these '0' outputs are not electrically disconnected; they are simply inactive control signals.

The purpose of the multi-input OR-gate (MI-OR-Gate) is to ensure that a logic '0' does not create a rail-to-rail loading path onto the shared bus. In the implemented structure, each AND output drives the control terminal of a pull device associated with the bus node. A logic '1' activates the relevant path and allows that register to influence the bus voltage, whereas a logic '0' leaves the corresponding device off. As a result, non-selected registers do not collectively clamp the bus toward their bias level, even though their internal divider structures still exist.

The outputs of all AND stages are therefore safely combined through the MI-OR-Gate before connection to the bus. This ensures that the bus voltage is determined solely by the selected register, rather than by the parallel combination of many resistive divider networks.

The overall gating arrangement is illustrated in Figure 5.

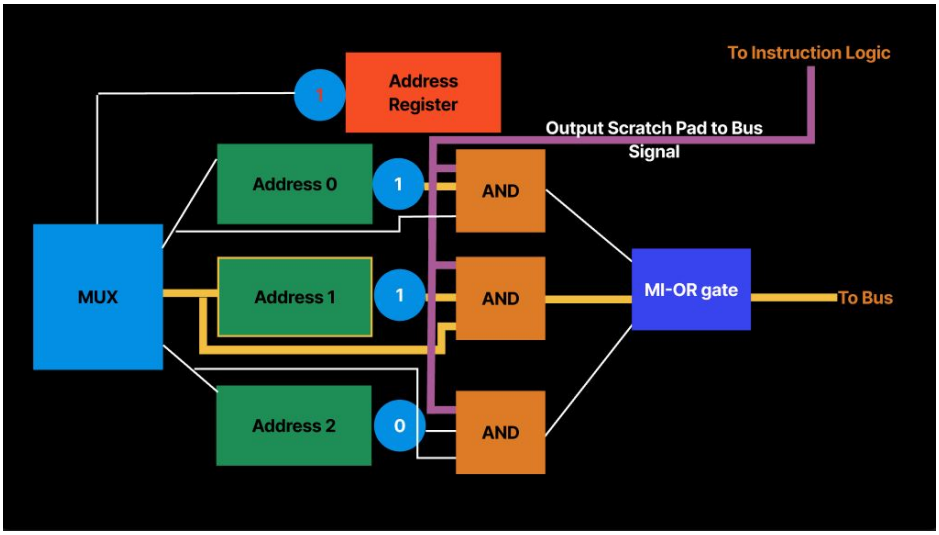

Figure 5: Example of gating in Scratch Pad