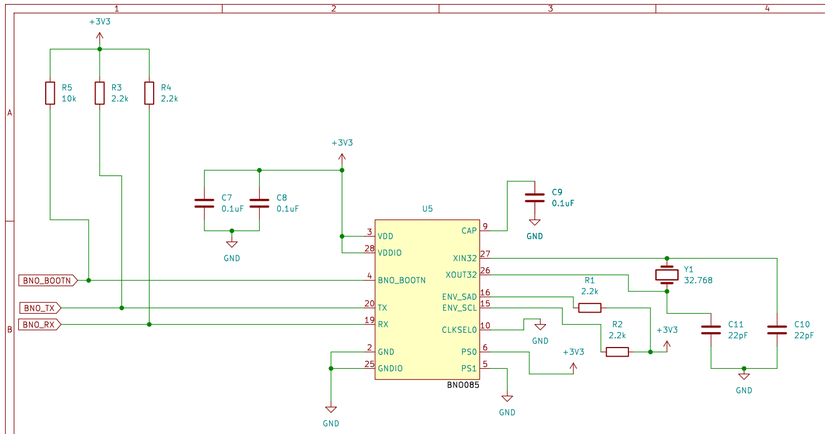

NOTE: PS0 (high) and PS1 (low) configuration sets BNO into UART RVC Mode permanently

IMU / State Estimation

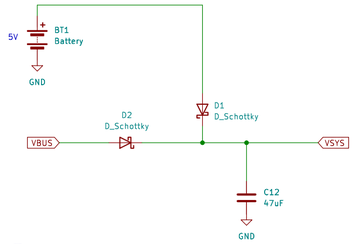

Power

NOTE: See figure 16 from Raspberry Pi Pico datasheet for reference on powering Pico

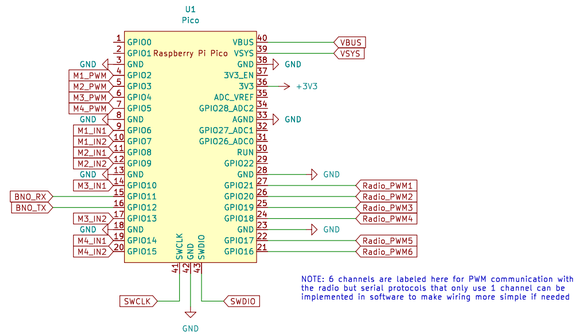

NOTE: 6 channels are labeled here for PWM communication with the radio but serial protocols that only use 1 channel can be implemented in software to make wiring more simple if needed

NOTE: Communicates with BNO085 over UART 1

Pico

Radio

NOTE: Any off the shelf receiver with at least 4 PWM channels

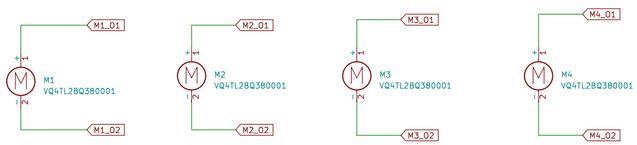

Motors

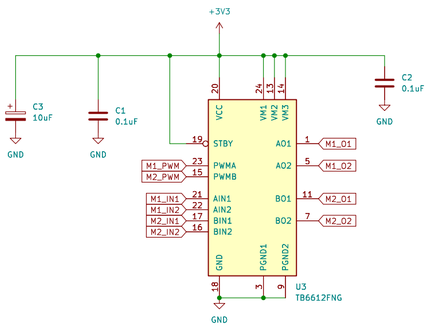

Motor Controllers 1 & 2

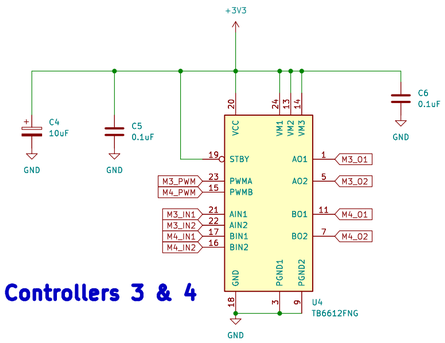

Motor Controllers 3 & 4

Sheet: /
File: all-in-one-board-quad.kicad_sch

Title:

Size: User	Date:	Rev:
KiCad E.D.A. 8.0.2-1		Id: 1/1