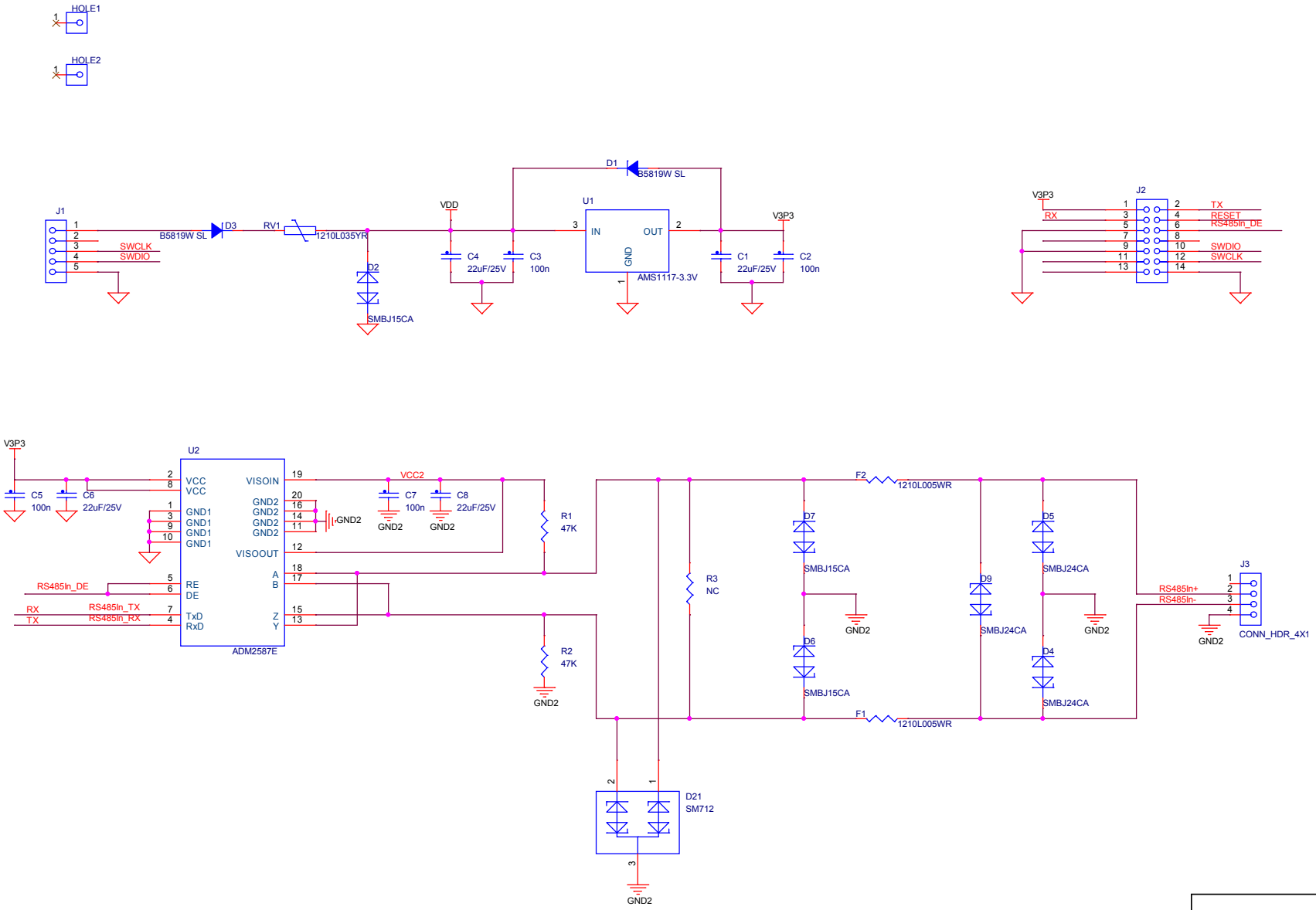

Title	A	
Size A3	Document Number 123	Rev A
Date: Friday, December 16, 2022	Sheet 1 of 1	