CH32L103/M103 Datasheet

V2.0

https://wch-ic.com

Overview

CH32L103 is an industrial-grade low-power general-purpose microcontroller designed based on QingKe RISC-V core.CH32L103 built-in USB and PD PHY, support PDUSB, including USB Host and USB Device functions, USB PD and Type-C fast charging function, built-in low-power timer, provides 1 OPA, 3 CMPs, 4 USARTs, 2 I2Cs, 2 SPIs, 1 CAN, multiple timers, 12-bit ADC, 10-channel touch-key, etc.

CH32M103G8R6 is equivalent to CH32L103 plus CH282, with built-in 24V three-phase P+N pre-drive and high-voltage LDO.

Features

- **Core**
  - QingKe 32-bit RISC-V4C core, RV32IMAC instruction set
  - Fast programmable interrupt controller + hardware interrupt stack
  - Branch prediction, conflict handling mechanism
  - System frequency 96MHz
- **Memory**
  - 20KB volatile data storage area SRAM
  - 64KB program memory area CodeFlash
  - 3328B System BootLoader storage area
  - 256B system non-volatile configuration information memory area
  - 256B user-defined information storage area
- **Power management and low-power:**
  - CH32L103 System power supply V_{DD} range: 1.8~3.6V
  - CH32M103G8R6 supports rated 6~24V power supply.
  - Low-power modes: Sleep, Stop, Standby
  - V_{BAT} independently powers RTC and backup registers
- **3-phase half-bridge driver**
  - CH32M103G8R6 has built-in 24V 3-phase P+N gate drive.
  - Built-in dead time control, prevent high-side and low-side power tubes from passing through.
  - Built-in undervoltage protection
- **Clock & Reset**
  - Built-in factory-tuned 8MHz RC oscillator
  - Built-in RC oscillator of about 40KHz.
  - Built-in PLL, optional CPU clock up to 96MHz.
  - External support high-speed oscillator 3 ~ 25MHz.
  - External support 32.768KHz low-speed oscillator
  - Power-on/down reset, programmable voltage monitor
- **8-channel general-purpose DMA controller**
  - 8 channels, support ring buffer management
  - Support TIMx/ADC/USART/I2C/SPI
- **3-group analog voltage comparator CMP:**
  - 2 input channels each, optional common reference voltage pin
  - Output to I/O or internal direct trigger TIM2
- **1-group OPA/PGA/voltage comparator:**
  - Multiple input channels, selectable multi-step gain
  - Multiple output channels, optional ADC pins
- **12-bit ADC**
  - Analogue input range: V_{SSA} ~ V_{DDA}
  - 10-channel external signal + 3-channel internal signal channel
  - On-chip temperature sensor
- **10-channel touch-key detection**
- **16-bit low-power timer**
- **RTC: 32-bit independent timer**

- **Multiple timers**
- 1×16-bit advanced-control timers, with dead zone control and emergency brake; can offer PWM complementary output for motor control
- 2×16-bit general-purpose timers, provide input capture/output comparison/PWM
- 1×32-bit general-purpose timer
- 2 watchdog timers (independent watchdog and window watchdog)
- SysTick: 64-bit counter
- **4-group UART: Support LIN and ISO7816**
- **2 I2C interface: Support SMBus/PMBus**
- **2 SPI interface**
- **1 CAN interface (2.0B active):**
- Support CAN FD protocol
- **USB 2.0 full-speed controller and PHY:**
- Support USB Host and USB Device
- **USB PD and Type C controller and PHY:**
- Support DRP, Sink and Source
- Support PDUSB
- **Fast GPIO port**
- 37 I/O ports, support 16 external interrupts
- **Security features: Chip unique ID**
- **Debug mode: 2-wire serial debug interface (SDI)**
- **Package: LQFP, QFN, QSOP, TSSOP**

Resource \ Model		CH32L103						CH32M103
		C8T6	K8U6	K8U7	G8R6	F8U6	F8P6	G8R6
Pin Number		48	32	32	28	20	20	28
FLASH (byte)		64K	64K	64K	64K	64K	64K	64K
SRAM (byte)		20K	20K	20K	20K	20K	20K	20K
GPIO port number		37	31	31	26	19	16	18
Timer	Advanced-control TIM1 (16-bit)	1	1	1	1	1	1	1
	General-purpose TIM2/3 (16-bit)	2	2	2	2	2	2	2
	General-purpose TIM4 (32-bit)	1	1	1	1	1	1	1
	Low-power timer (LPTIM)	√	√	√	√	√	√	√
	Watchdog	2 (WWDG + IWDG)						
	SysTick (64-bit)	√						
RTC		√						
3-phase gate drive	Voltage	-						24V
	Structure	-						P+N
ADC		10+3	10+3	10+3	10+3	10+3	9+3	10+3
Tkey		10-channel	10-channel	10-channel	10-channel	10-channel	9-channel	10-channel
OPA		1	1	1	1	1	1	1

CMP			3	3	3	3	3	CMP1 CMP2	3
Communication interface	USART		4	4	4	4	4	4	4
	SPI		2	SPI1	SPI1	2	2	SPI1	SPI1
	I2C		2	I2C1	I2C1	2	2	I2C1	2
	CAN		1	1	1	1	1	1	1
	PDUSB	USB Host Device	Host Device	Host Device	Host Device	Host Device	Host Device	Device	Host Device
		USB PD Type-C	DRP Source Sink	DRP Source Sink Built-in Rd(1)	DRP Source Sink Built-in Rd(1)	DRP Source Sink	DRP Source Sink Built-in Rd(1)	DRP Source Sink	DRP Source Sink
CPU main frequency			Max: 96MHz						
Rated voltage			3.3V						
Operating temperature(2)			-40°C~85°C		-40°C~105 °C	-40°C~85°C			
Package form			LQFP48	QFN32	QFN32	QSOP28	QFN20	TSSOP20	QSOP28
Main applications and features			General-purpose, Pin compatible	General-purpose, pin optimized	General-purpose, pin optimized	General-purpose, motor master	General-purpose, pin optimized	General-purpose, Pin compatible	With gate drive, dedicated for motor

Note: 1. CH32L103K8U6, K8U7 and F8U6 have built-in Type-C specification-defined controllable Rd pull-down resistors of about 5.1kΩ.

2. In the table above, compared to the CH32L103K8U6, the CH32L103K8U7 shares identical performance characteristics except for a broader operating temperature range.

Chapter 1 Specification Information

1.1 System Structure

The microcontroller is designed on the basis of the RISC-V instruction set, and its architecture integrates QingKe microprocessor core, arbitration unit, DMA module, SRAM storage and other components through multiple bus groups to achieve interaction. A general-purpose DMA controller is integrated to reduce the CPU load and improve access efficiency, and a multi-level clock management mechanism is applied to reduce the power consumption of peripherals. The following diagram shows the overall internal architecture of the series chip.

Figure 1-1-1 CH32L103 System Block Diagram

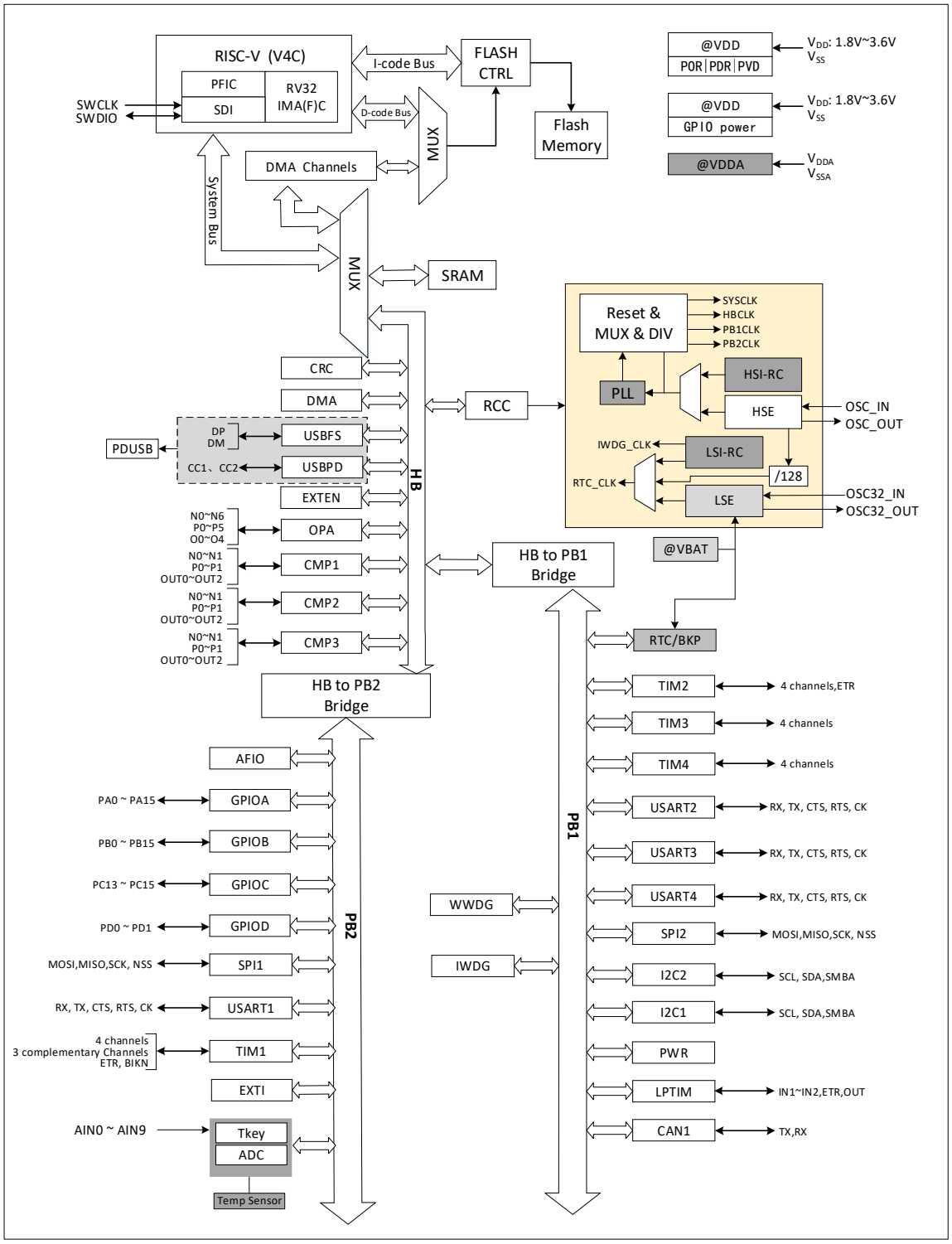

Figure 1-1-2 CH32M103G8R6 System Block Diagram

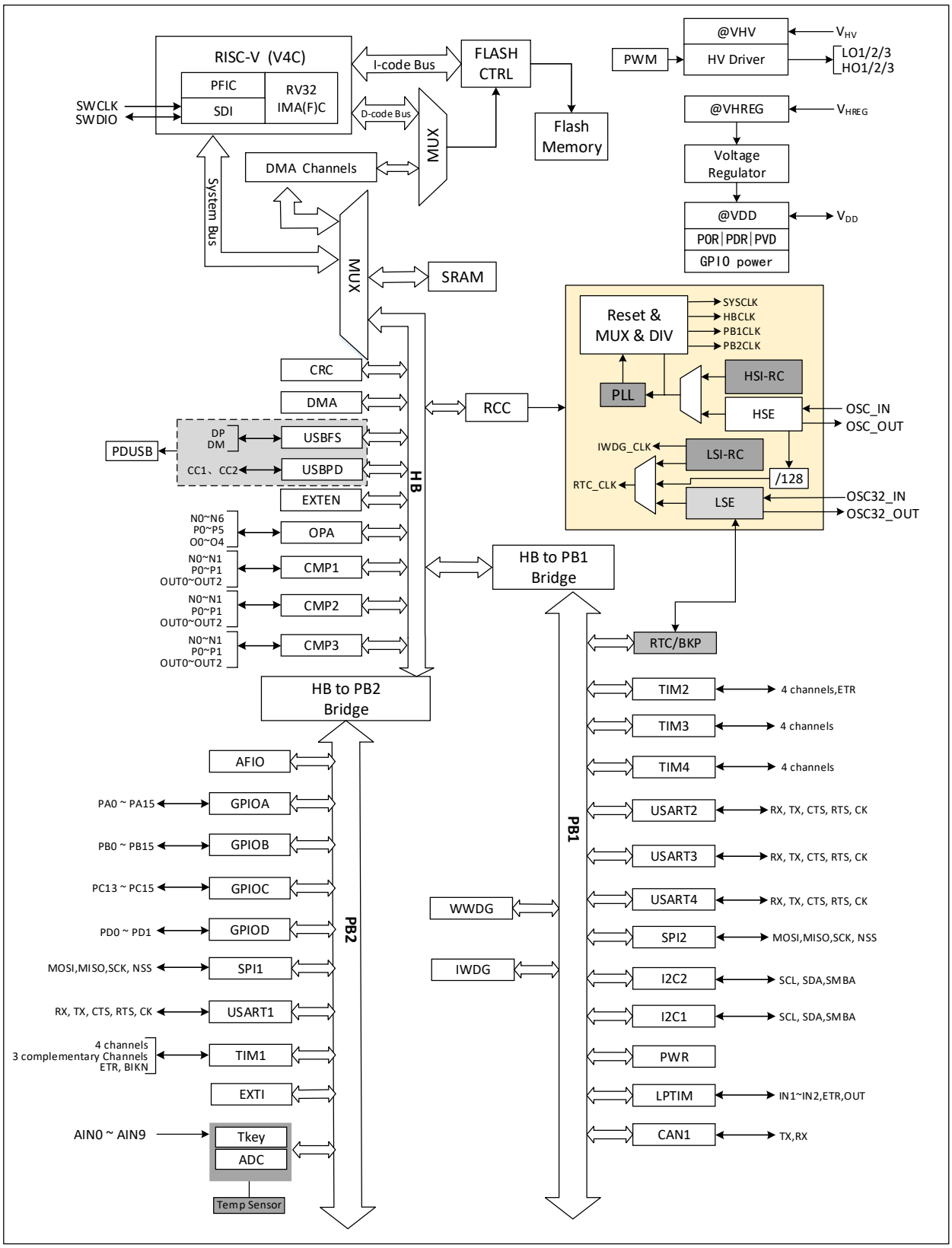

1.2 Memory Map

Figure 1-2 Memory address map

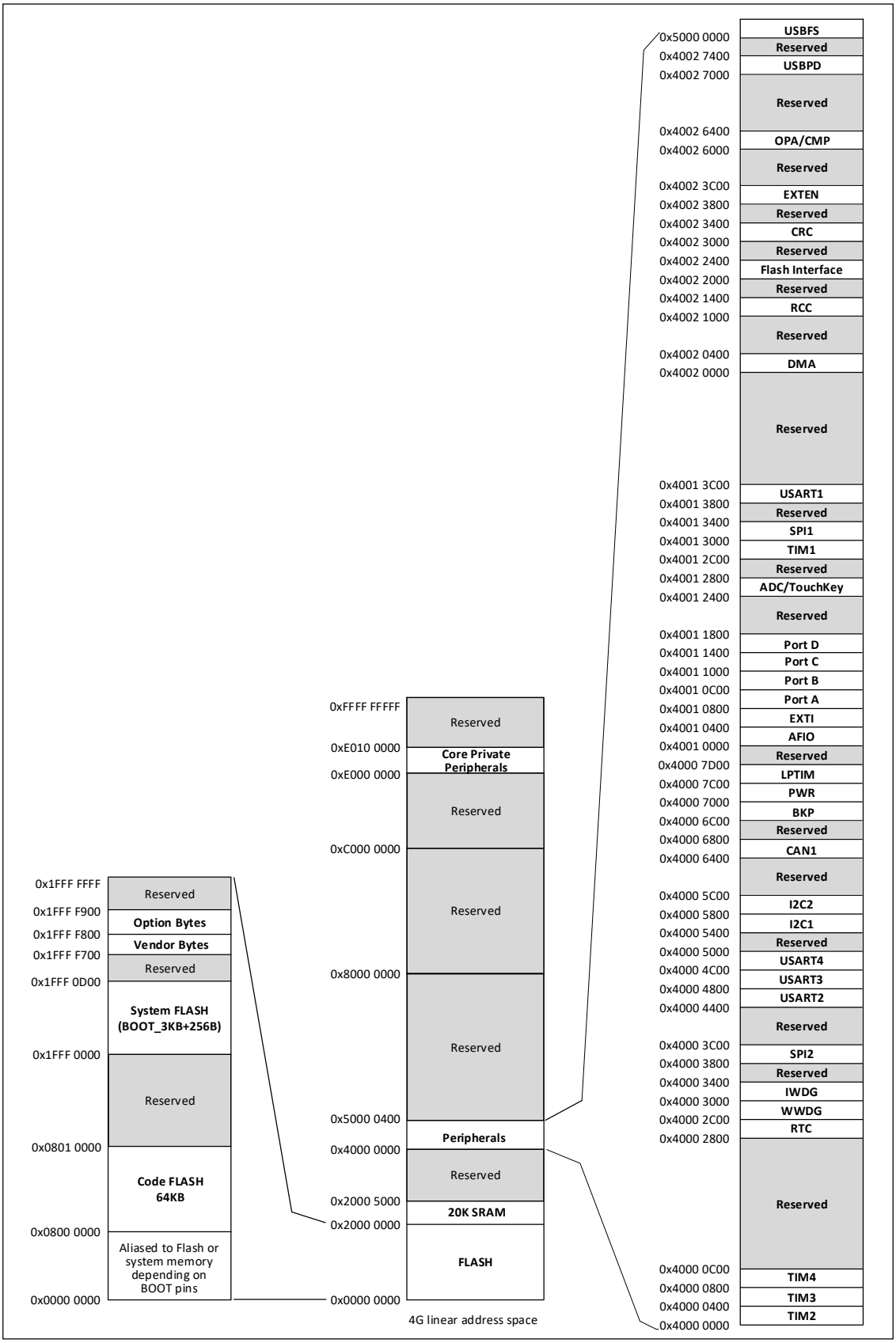

1.3 Clock Tree

4 groups of clock sources are introduced into the system: internal high frequency RC oscillator (HSI), internal low frequency RC oscillator (LSI), external high frequency oscillator (HSE), external low frequency oscillator (LSE). Among them, the low frequency clock source provides a clock reference for RTC and independent watchdogs. The high frequency clock source is directly or indirectly output to the system bus clock (SYSCLK) through PLL frequency doubling. the system clock is provided by each prescaler to provide HB domain, PB1 domain, PB2 domain peripheral control clock and sampling or interface output clock, and part of the module work needs to be provided directly by PLL clock.

Figure 1-3 Clock tree block diagram

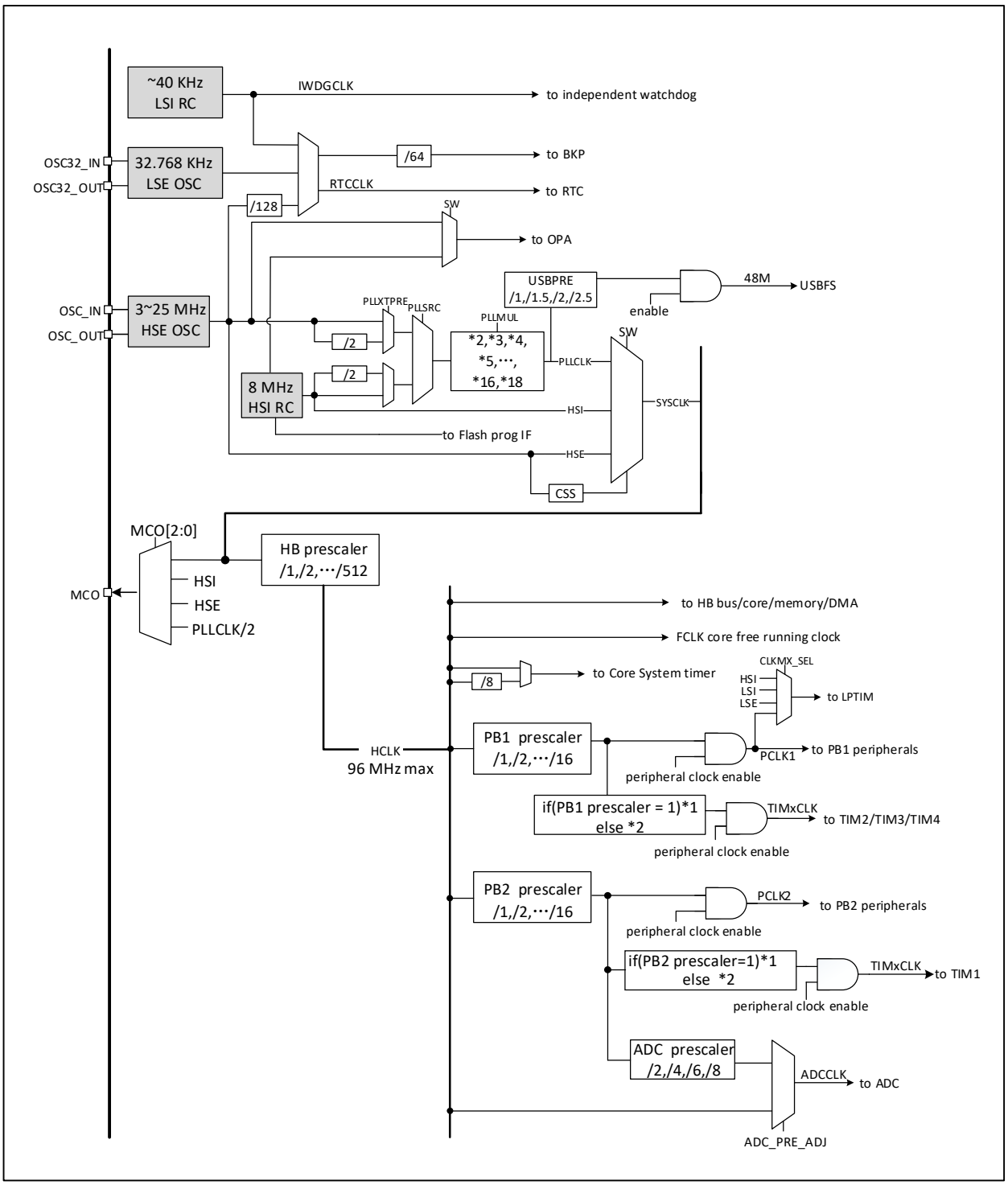

1.4 Functional Description

1.4.1 QingKe RISC-V4C Processor

RISC-V4C supports the IMAC subset of the RISC-V instruction set. The processor is managed internally in a modular fashion and contains units such as a programmable fast interrupt controller (PFIC), memory protection, branch prediction mode and extended instruction support. Externally multiple buses are connected to external unit modules, enabling interaction between external function modules and the core.

The processor with its minimal instruction set, multiple operating modes, and modular custom extensions can be flexibly applied to different scenarios of microcontroller design, such as small area low-power embedded scenarios, high performance application operating system scenarios, etc.

- Support machine and user privileged modes
- Programmable Fast Interrupt Controller (PFIC)
- Multi-level hardware interrupt stack
- 2-wire serial debug interface (SDI)
- Standard memory protection design
- Static or dynamic branch prediction, efficient jumping, conflict detection mechanisms
- Custom extension instructions

1.4.2 On-chip Memory

Built-in 20K bytes SRAM, available for storing data, which will be lost after power down. The specific capacity should correspond to the chip model.

Built-in 64K bytes program flash memory storage area (Code FLASH), i.e. user area, for user's application program and constant data storage. The specific size of the area corresponds to the chip model.

Built-in 3328 bytes System FLASH (System FLASH), i.e. BOOT area, used for system boot program storage, built-in bootstrap loading program.

Built-in 256-byte system non-volatile configuration information storage area, used for vendor's configuration word storage, factory-cured, user cannot be modified.

Built-in 256-byte user-defined information storage area for user option byte storage.

At startup, one of three bootstrap modes can be selected via the bootstrap pins (BOOT0 and BOOT1):

- Bootstrap from program flash memory
- Boot from system memory
- Boot from internal SRAM

The bootstrap loading program is stored in the system memory and the contents of the program flash memory storage area can be reprogrammed via the USART2 and USB interfaces.

1.4.3 Power Supply Scheme

(1) CH32L103

- V_{DD} = 1.7 ~ 3.6V: Supplies power to the I/O pins and internal regulator.
- V_{DDA} = 1.8 ~ 3.6V: Supplies power to the analog portion of the high-frequency RC oscillator, ADC,

temperature sensor, and PLL. During normal operation. V_{DDA} voltage must not be higher than V_{DD} voltage; when using TS, V_{DDA} must not be less than 2.0V.

- V_{BAT} = 1.8 ~ 3.6V: Optional backup power supply, When V_{DD} is turned off, power is supplied (via the internal power switcher) separately to the RTC, external low-frequency oscillator, and back-up registers.

(2) CH32M103G8R6

CH32M103G8R6 has built-in 3-phase P+N gate driver, which supports grid driving of 3 pairs of N-type and P-type MOSFET power transistors in 3-phase brushless DC motors below 24V.

V_{HV} = 6~26V: For the power supply terminal of the gate driver, at least 3.3uF capacitor should be externally connected, and 10uF is recommended.

V_{HREG} = 6~26V: For the power supply terminal of the internal voltage regulator, power must be supplied, and V_{HV} can be directly connected. It is suggested to divide the voltage between V_{HV} and V_{HREG} in series according to the load current to reduce the chip heating, and the voltage difference with V_{DD} should be over 2V at full load.

V_{DD} = Rated 3.3V: For the output terminal of the internal voltage regulator and the power supply terminal of the I/O pin, an external MLCC capacitor with a capacity of at least 4.7uF is required, and 10uF is recommended.

1.4.4 Power Supply Detector

The chip integrates a power-on reset (POR)/power-off reset (PDR) circuit, which is always in a working state to ensure that the system works when the power supply is not less than 1.8V; when V_{DD} falls below the set threshold ($V_{POR/PDR}$), it puts the device in reset without the need for an external reset circuit.

In addition, the system has a programmable voltage monitor (PVD), which needs to be turned on by software to compare the voltage magnitude of the V_{DD} supply with the set threshold V_{PVD}. Turning on the corresponding edge interrupt of the PVD allows you to receive an interrupt notification when V_{DD} falls to the PVD threshold or rises to the PVD threshold. Refer to Chapter 3 for $V_{POR/PDR}$ and V_{PVD} values.

1.4.5 System Voltage Regulator LDO

After resetting, the system voltage regulator is automatically switched on. There are 3 modes of operation depending on the application mode.

- On mode: Normal running operation, providing stable core power.
- Low-power mode: Low-power operation of the regulator when the CPU is in Standby mode.
- Shutdown mode: The regulator is automatically switched to this mode when the CPU enters the Standby mode, the regulator output is high resistance, the power supply to the core circuit is cut off, and the regulator is in the zero-consumption state.

The regulator is always in on mode after reset, and is turned off in standby mode in shutdown mode, when it is high resistance output.

1.4.6 Low-power Mode

The system supports 3 low-power modes, which can achieve the best balance under the conditions of low power consumption, short start-up time and multiple wake-up events.

- Sleep mode (SLEEP)

In sleep mode, only the CPU clock stops, but all peripheral clocks are powered normally and the peripherals are in working state. This mode is the shallowest low-power mode, but can achieve the fastest wake-up.

Exit condition: Any interruption or wake-up event.

- Stop mode (STOP)

This mode FLASH enters the low-power mode or power-off state, and the RC oscillator and HSE crystal oscillator of PLL and HSI are turned off. The stop mode can achieve the lowest power consumption while keeping the contents of SRAM and registers intact.

The stop mode is divided into 4 cases: Stop Mode 1, Stop Mode 2, Stop Mode 3 and Stop Mode 4. For detailed information, please refer to the Low-power Mode related chapter in the CH32L103RM manual.

Exit condition: Any external interrupt / event (EXTI signal), WKUP pin rising edge, external reset signal on NRST, IWDG reset, in which EXTI signal includes one of 37 external I/O ports, PVD output, RTC alarm clock, USB wake-up signal, USBPD wake-up signal, CMP wake-up signal, LPTIM wake-up signal and so on.

- Standby mode (STANDBY)

In this mode, the main LDO of the system is turned off, the wake-up circuit is powered by the low-power LDO, all other digital circuits are powered off, and the FLASH is in a power-off state. The wake-up system from standby mode will generate power reset and SBF (PWR_CSR) will be set. After waking up, the SBF status is queried to know the low-power mode before wake-up, and the SBF is cleared by the CSBF (PWR_CR) bit. In standby mode, the contents of 20KB's SRAM can be maintained (depending on the planned configuration before going to bed), and the contents of the backup register can be retained.

Exit conditions: EXT10~EXT17 any external event (excluding interrupts), external reset signal on NRST, IWDG reset, in which EXTI signal includes one of 37 external I/O ports, RTC alarm clock, etc.

1.4.7 CRC Calculation Unit

The CRC (Cyclic Redundancy Check) Calculation Unit generates a CRC code from a 32-bit data word using a fixed polynomial generator. In numerous applications, CRC-based techniques are used to verify the consistency of data transmission or storage. Within the scope of the EN/IEC 60335-1 standard, which provides a means of detecting errors in flash memory, the CRC calculation unit can be used to compute the signature of software in real time and compare it with the signature generated at the time of linking and generating that software.

1.4.8 Programmable Fast Interrupt Controller (PFIC)

The chip has a built-in Programmable Fast Interrupt Controller (PFIC) that supports up to 255 interrupt vectors, providing flexible interrupt management with minimal interrupt latency. Currently the chip manages 4 core private interrupts and 51 peripheral interrupt management, with other interrupt sources reserved. the PFIC registers are all accessible in both user and machine privileged modes.

- 2 individually maskable interrupts
- Provide one non-maskable interrupt NMI
- Support hardware interrupt stack (HPE) without instruction overhead
- Provide 4 table-free interrupts (VTF) for faster access to interrupt service routines
- Vector table support address or instruction mode
- Interrupt nesting depth can be configured up to 2 levels
- Support interrupt tail linking

1.4.9 External Interrupt/Event Controller (EXTI)

The external interrupt/event controller contains a total of 22 edge detectors for generating interrupt/event requests. Each interrupt line can be configured independently of its trigger event (rising or falling edge or double edge) and can be individually masked; a pending register maintains the status of all interrupt requests. Up to 37 general purpose I/O ports are optionally connected to 16 external interrupt lines.

1.4.10 General DMA Controller

The system has a built-in general-purpose DMA controller that manages 8 channels to flexibly handle high-speed data transfers between memory to memory, peripheral to memory and memory to peripheral, supporting the ring buffer approach. Each channel has dedicated hardware DMA request logic to support one or more peripheral access requests to memory, with configurable access priority, transfer length, source and destination addresses for transfers, etc.

DMA is used for the main peripherals including: General-purpose/advanced-control timers TIMx, ADC, USART, I2C, SPI.

USB and USB PD have additional dedicated independent DMA channels.

Note: DMA and CPU access to system SRAM after arbiter arbitration.

1.4.11 Clock and Boot

The system clock source HSI is on by default. After no clock is configured or reset, the RC oscillator of the internal 8MHz is used as the default CPU clock, and then the external 3~25MHz clock or PLL clock can be selected. When clock safe mode is turned on, if HSE is used as the system clock (directly or indirectly), if an external clock failure is detected, the system clock will automatically switch to the internal RC oscillator, while HSE and PLL will automatically turn off; for low-power mode with clock off, the system will also automatically switch to the internal RC oscillator after waking up. If the clock interrupt is enabled, the software can receive the corresponding interrupt.

Multiple prescalers are used to configure the frequency of HB, high-speed PB (PB2) and low-speed PB (PB1) areas provide each peripheral clock, the highest frequency 96MHz, refer to the clock tree block diagram of figure 1-3.

1.4.12 RTC and Backup Register

The RTC and the backup register are in the backup power supply area within the system, which is powered by the V_{DD} when the V_{DD} is effective, and automatically switched to the power supply by the V_{BAT} pin when the V_{DD} is invalid.

The RTC real-time clock is a set of 32-bit programmable counters with a time base that supports 20-bit prescaling and is used for long-time measurement. The clock reference comes from a high-speed external clock division (HSE/128), an external crystal low frequency oscillator (LSE), or an internal low-power RC oscillator (LSI). Among them, there is also a backup power supply area in LSE, so when LSE is selected as RTC, the setting and time of RTC can remain unchanged after the system resets or wakes up from Standby mode.

The backup register contains 10 16-bit registers, which can be used to store 20 bytes of user application data. This data can be maintained after waking up on standby, or when the system is reset or the power is reset. When the intrusion detection function is turned on, once the intrusion detection signal is valid, all contents in the backup

register will be cleared.

1.4.13 Analog-to-digital Converter (ADC) and Touch-key Capacitance Detection (TKey)

The chip has a built-in 12-bit ADC that provides up to 10 external channels and 3 internal channel samples with programmable channel sampling times for single, continuous, sweep or intermittent conversion. Provides analog watchdog function allows very precise monitoring of one or more selected channels for monitoring channel signal voltages, provides configurable analog watchdog reset function to reset the system when monitored voltage exceeds a threshold. Supports external event-triggered transitions. Trigger sources include internal signals from on-chip timers and external pins. Supports operation using DMA.

The internal channels of the ADC are ADC_IN16 to ADC_IN18. The temperature sensor is internally connected to the IN16 input channel for converting the sensor output to a digital value; the internal reference voltage is connected to the IN17 input channel; and $V_{DDA}/2$ is connected to the IN18 input channel.

The touch-key capacitance detection unit provides up to 10 detection channels and reuses the external channels of the ADC module. The detection result is converted into the output result by the ADC module, and the touch-key state is identified by the user software.

1.4.14 Timer and Watchdog

- Advanced-control timer (TIM1)

The advanced-control timer is a 16-bit automatic load increment / decrement counter with a 16-bit programmable prescaler. In addition to the complete general timer function, it can be regarded as a three-phase PWM generator assigned to 6 channels, with a complementary PWM output function with dead-zone insertion, allowing the timer to be updated after a specified number of counter cycles for repeated counting cycles, braking functions, etc. Advanced control timers have the same functions as general timers and have the same internal structure, so advanced control timers can cooperate with other TIM timers through timer linking function to provide synchronization or event linking functions.

- General-purpose timer (TIM2, TIM3, TIM4)

The general-purpose timer is two 16-bit (TIM2, TIM3) and 1 32-bit (TIM4) autoload add / decrement counters with a programmable 16-bit prescaler and four independent channels, each of which supports input capture, output comparison, PWM generation, and single pulse mode output. It can also work with advanced control timers through the timer linking function to provide synchronization or event linking functions. In debug mode, counters can be frozen while PWM outputs are disabled, thus cutting off the switches controlled by these outputs. Any general timer can be used to generate PWM output. Each timer has an independent DMA request mechanism. These timers can also process the signal of the incremental encoder and the digital output of 1 to 3 Hall sensors.

- Independent watchdog

Independent watchdog is a free-running 12-bit decreasing counter that supports 7 frequency division coefficients. The clock is provided by an internally independent RC oscillator (LSI) of about 40KHz. IWDG works completely independently of the main program, so it is used to reset the entire system in the event of a problem, or to provide timeout management for applications as a free timer. The option byte can be configured as a software or hardware startup watchdog. Counters can be frozen in debug mode.

- Window watchdog

The window watchdog is a 7-bit decrement counter and can be set to run freely. Can be used to reset the entire

system when a problem occurs. It is driven by the main clock and has the function of early warning interrupt; in debug mode, the counter can be frozen.

- System time base timer

QingKe microprocessor core comes with a 64-bit optional increment or decrement counter, which is used to generate SYSTICK exceptions (exception number: 12), which can be specially used in real-time operating systems to provide "heartbeat" rhythm for the system, or can be used as a standard 64-bit counter. It has automatic reload function and programmable clock source.

1.4.15 Low-power Timer (LPTIM)

The low-power timer is a 16-bit auto-loading incremental counter with a 3-bit programmable prescaler. It can be triggered by either software or hardware inputs and supports PWM outputs. The Low-power Timer wakes up the system from a low-power mode and realizes a "time-out function" with very low-power consumption.

1.4.16 Universal Synchronous/Asynchronous Receiver Transmitter (USART)

The chip provides 4 sets of universal synchronous/asynchronous transceivers. It supports full duplex asynchronous serial communication, synchronous unidirectional communication as well as half duplex single line communication, also LIN (Local Interconnect Network), ISO7816 compatible smart card protocol and IrDA SIR ENDEC transmission codec specification, as well as modem (CTS/RTS hardware flow control) operation, and also supports multi-processor communication. It uses a fractional baud rate generator system and supports continuous communication by DMA operation.

1.4.17 Serial Peripheral Interface (SPI)

The chip provides 2 serial peripheral SPI interface, support master or slave operation, dynamic switching. Support multi-master mode, full-duplex or half-duplex synchronous transmission, support basic SD card and MMC mode. Programmable clock polarity and phase, data bit width provides 8- or 16-bit selection, hardware CRC generation/check for reliable communication, and continuous communication support for DMA operation.

1.4.18 I2C Bus

The chip provides 2 I2C bus interface, capable of working in multi-master or slave mode, performing all I2C bus specific timing, protocols, arbitration, etc. Both standard and fast communication speeds are supported and it is also compatible with SMBus 2.0.

The I2C interface provides 7-bit or 10-bit addressing, and supports dual slave addressing in 7-bit Slave mode. It integrates built-in hardware CRC generator/checker. It also supports DMA operation and supports SMBus bus version 2.0/PMBus bus.

1.4.19 Controller Area Network (CAN)

The chip provides 1 group CAN interface, compatible with specification 2.0A and 2.0B (active), baud rate up to 1Mbits/s, supports time-triggered communication function, supports CAN FD protocol, the biggest difference between traditional CAN is that the rate is variable, and the data bit rate is up to 8Mbps. it can receive and send standard frames with 11-bit identifiers, and also can receive and send extended frames with 29-bit identifiers. It can receive and send standard frames with 11-bit identifiers and extended frames with 29-bit identifiers. It has three

transmitter mailboxes and two 3-level deep receive FIFOs.

1.4.20 Universal Serial Bus USB2.0 Full-speed Host/Device Controller (USBFS)

USB2.0 Full-speed Host Controller and Device Controller (USBFS) following the USB2.0 Full-speed standard and supporting the BC charging protocol. Provides 8 configurable USB device endpoints and a set of host endpoints. Supports control/lot/sync/interrupt transfers, double buffer mechanism, USB bus hang/resume operation and provides standby/wakeup functions. 48MHz clock dedicated to the USBFS module is generated directly from the internal high-speed clock (HSI).

1.4.21 USB PD and Type-C Controller (USB PD)

Built-in USB Power Delivery controller and PD transceiver PHY, support USB Type-C master-slave detection, automatic BMC codec and CRC, hardware edge control, support USB PD2.0 and PD3.0 power delivery control, support fast charging, support UFP/PD powered end Sink and DFP/PD powered end Source applications, DRP application as well as dynamic switching, some models have built-in controllable Rd pull-down resistor and support PDUSB.

With the addition of Type-C/PD high-voltage interface chip CH211, 28V direct power supply, 28V tolerant voltage of CC pin and built-in controllable Rd pull-down resistor 5K1 defined by Type-C specification can be realized.

1.4.22 General-purpose Input / Output (GPIO)

The system provides 4 sets of GPIO ports with a total of 37 GPIO pins. Each pin can be configured by software to output (push-pull or open-drain), input (with or without pull-up and pull-down), or reuse peripheral function ports. Most GPIO pins are shared with digital or analog multiplexing peripherals. Except for the ports with analog input function, all GPIO pins have greater current drive capability. Provides a locking mechanism to freeze the IO configuration to avoid accidental writing to the I/O register.

Most of the IO pin power supply in the system is provided by VDD. By changing the VDD power supply, the IO pin output level will be changed to adapt to the external communication interface level. Please refer to the pin description for the specific pin.

1.4.23 Operational Amplifier/Comparator (OPA)

The chip has a built-in 1-group op-amp (OPA), which can also be used as a voltage comparator. Its input can be selected for multiple channels by changing the configuration, including amplification selection for the programmable gain op-amp (PGA), and its output can be selected for 2 channels by changing the configuration, internally associated to ADC channels. External analogue small signal amplification is supported for feeding into the ADC for small signal ADC conversion.

1.4.24 Voltage Comparator (CMP)

The chip has 3 built-in rail-to-rail analog voltage comparators with optional hysteresis characteristics. The voltage comparison results are triggered by the GPIO output or internally directly into the input channels CH1 ~ CH3 of the TIM2.

1.4.25 Gate Driver

CH32M103G8R6 chip is a special MCU for motor, which integrates 3 independent half-bridge drivers. Each half-bridge includes high-side and low-side level shifting circuits, high-side and low-side output driving circuits, and also supports 3 pairs of gate drivers of P+N MOSFET power tubes. It is mainly used for grid driving of 3 pairs of N-channel and P-channel MOSFET power tubes in 3-phase motors below 24V.

The 3-phase half-bridge of CH32M103G8R6 is controlled by six PWM signals generated by the advanced timer TIM1, and the dead time of PWM is adjustable, which supports direct braking control of overcurrent protection. When using, you should set TIM1_RM_H = 0 and TIM1_RM = 00 to map the pins of TIM1. The low-side gate driving LO1/LO2/LO3 is controlled by PB13, PB14 and PB15 of CH32L103 respectively, and the high-side gate driving HO1/HO2/HO3 is controlled by PA8, PA9 and PA10 of CH32L103 respectively.

1.4.26 2-wire SDI Serial Debug Interface

The core comes with a 2-wire serial debug interface (SDI), including SWDIO and SWCLK pins. The default debug interface pin function is turned on after the system is powered on or reset, and the SDI can be turned off according to the need after the main program is running.

Chapter 2 Pinouts and Pin Definition

2.1 Pinouts

2.1.1 CH32L103 Pinouts

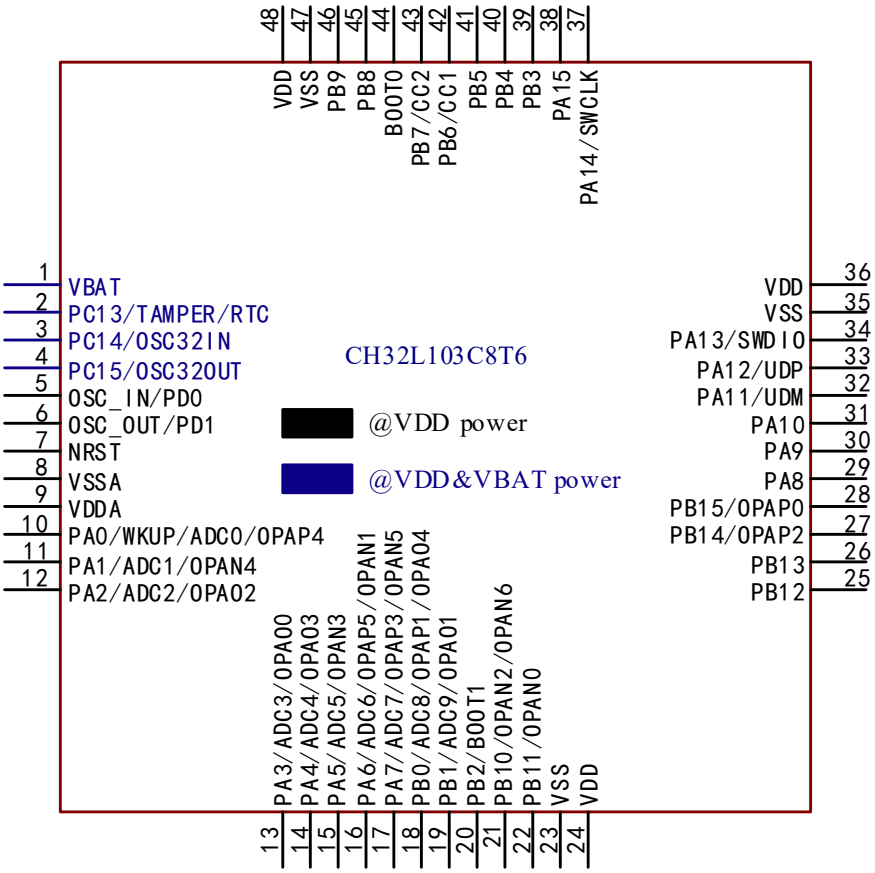

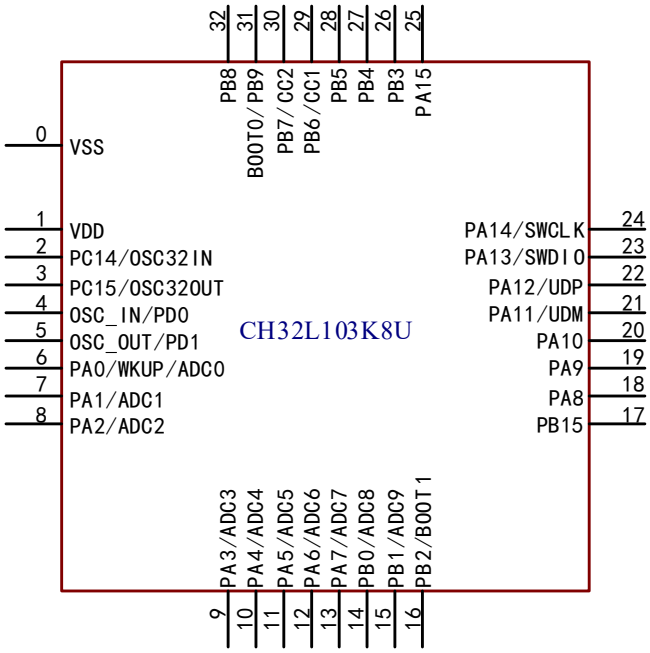

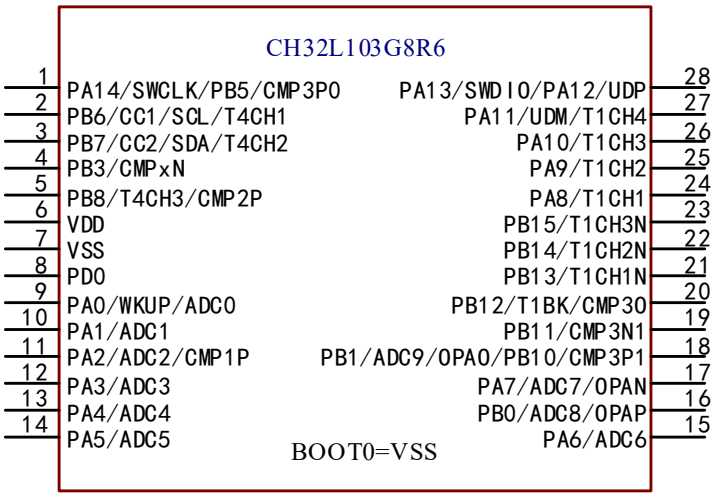
CH32L103G8R6
1 PA14/SWCLK/PB5/CMP3P0
2 PB6/CC1/SCL/T4CH1
3 PB7/CC2/SDA/T4CH2
4 PB3/CMPxN
5 PB8/T4CH3/CMP2P
6 VDD
7 VSS
8 PD0
9 PA0/WKUP/ADC0
10 PA1/ADC1
11 PA2/ADC2/CMP1P
12 PA3/ADC3
13 PA4/ADC4
14 PA5/ADC5
28 PA13/SWDIO/PA12/UDP
27 PA11/UDM/T1CH4
26 PA10/T1CH3
25 PA9/T1CH2
24 PA8/T1CH1
23 PB15/T1CH3N
22 PB14/T1CH2N
21 PB13/T1CH1N
20 PB12/T1BK/CMP3O
19 PB11/CMP3N1
18 PB1/ADC9/OPA0/PB10/CMP3P1
17 PA7/ADC7/OPAN
16 PB0/ADC8/OPAP
15 PA6/ADC6
BOOT0=VSS

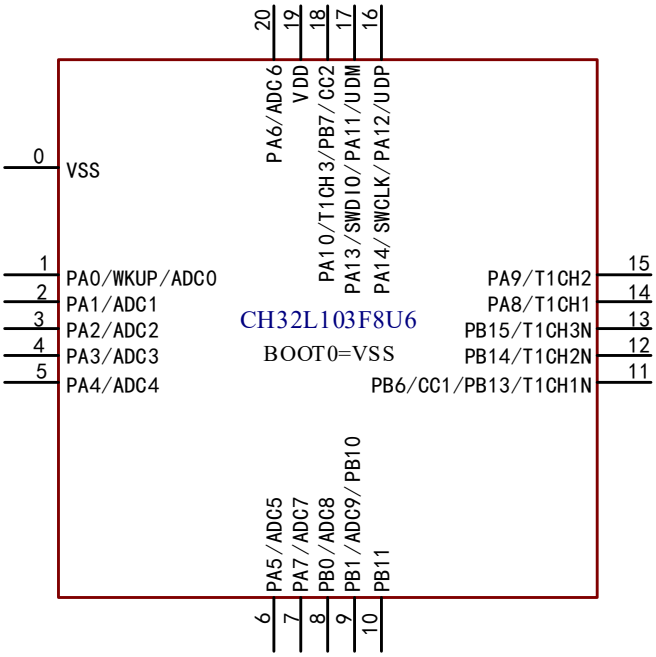
CH32L103F8U6
BOOT0=VSS
0 VSS
1 PA0/WKUP/ADC0
2 PA1/ADC1
3 PA2/ADC2
4 PA3/ADC3
5 PA4/ADC4
6 PA5/ADC5
7 PA7/ADC7
8 PB0/ADC8
9 PB1/ADC9/PB10
10 PB11
20 PA6/ADC6
19 VDD
18 PA10/T1CH3/PB7/CC2
17 PA13/SWDIO/PA11/UDM
16 PA14/SWCLK/PA12/UDP
15 PA9/T1CH2
14 PA8/T1CH1
13 PB15/T1CH3N
12 PB14/T1CH2N
11 PB6/CC1/PB13/T1CH1N

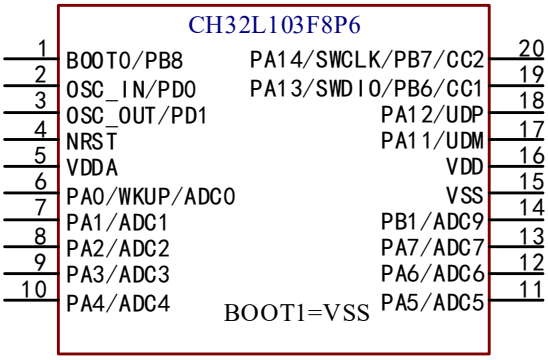
CH32L103F8P6
1 BOOT0/PB8
2 OSC_IN/PD0
3 OSC_OUT/PD1
4 NRST
5 VDDA
6 PA0/WKUP/ADC0
7 PA1/ADC1
8 PA2/ADC2
9 PA3/ADC3
10 PA4/ADC4
20 PA14/SWCLK/PB7/CC2
19 PA13/SWDIO/PB6/CC1
18 PA12/UDP
17 PA11/UDM
16 VDD
15 VSS
14 PB1/ADC9
13 PA7/ADC7
12 PA6/ADC6
11 PA5/ADC5
BOOT1=VSS

2.1.2 CH32M103 Pinouts

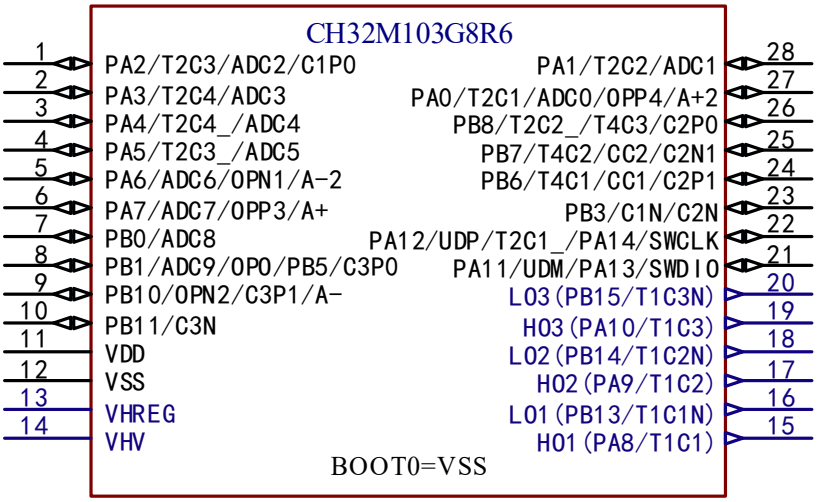

Note: The alternate functions in the pin diagram are abbreviated.

Example: ADC: ADC_ (ADC0: ADC_IN0)

T: TIME_ (T1CH3:TIM1_CH3, T1CH1N: TIM1_CH1N, T1BK: TIM1_BKIN)

OPA: OPA_ (OPAP4: OPA_P4, OPAN4: OPA_N4, OPAO2: OPA_O2)

UDP: USBDP

UDM: USBDM

2.2 Pin Description

Note that the pin function descriptions in the table below are for all functions and do not refer to specific chip models. Peripheral resources may vary from model to model, so please check the availability of this function against the chip model resource table before viewing.

Table 2-1-1 CH32L103 Pin definitions

Pin No.					Pin name	Pin type(1)	I/O level	Main function (After reset)	Default alternate function	Remapping function(10)
L103F8P6	L103F8U6	L103G8R6	L103K8U	L103C8T6						
-	-	-	-	1	V_{BAT}	P	-	V_{BAT}		
-	-	-	-	2	PC13-TAMPER-RTC (2)	I/O	-	PC13(3)	TAMPER RTC	
-	-	-	2	3	PC14-OSC32_IN(2)	I/O/A	-	PC14(3)	OSC32_IN	
-	-	-	3	4	PC15-OSC32_OUT(2)	I/O/A	-	PC15(3)	OSC32_OUT	
2	-	8	4	5	OSC_IN	I/O/A	-	OSC_IN		PD0(4) USART3_TX_3 USART3_RX_2 CAN1_RX_3
3	-	-	5	6	OSC_OUT	I/O/A	-	OSC_OUT		PD1(4) USART3_TX_2 USART3_RX_3 CAN1_TX_3
4	-	-	-	7	NRST	I	-	NRST		
-	-	-	-	8	V_{SSA}	P	-	V_{SSA}		
5	-	-	-	9	V_{DDA}	P	-	V_{DDA}		
6	1	9	6	10	PA0-WKUP	I/O/A	-	PA0	WKUP ADC_IN0 TIM2_CH1_ETR USART2_CTS OPA_P4	TIM2_CH1_ETR_2 USART2_CTS_2 USART2_CTS_3
7	2	10	7	11	PA1	I/O/A	-	PA1	ADC_IN1 TIM2_CH2 USART2_RTS OPA_N4	TIM1_CH1_2 TIM1_CH1_3 TIM2_CH2_2 TIM1_CH2N_5 USART2_RTS_2 USART2_RTS_3
8	3	11	8	12	PA2	I/O/A	-	PA2	ADC_IN2 CMP1_P0	TIM1_CH4_4 TIM2_CH2_4

Pin No.					Pin name	Pin type(1)	I/O level	Main function (After reset)	Default alternate function	Remapping function(10)
L103F8P6	L103F8U6	L103G8R6	L103K8U	L103C8T6						
									OPA_O2 TIM2_CH3 USART2_TX	TIM2_CH2_5 TIM2_CH3_1 USART1_CTS_2
9	4	12	9	13	PA3	I/O/A	-	PA3	ADC_IN3 OPA_O0 TIM2_CH4 USART2_RX	TIM1_ETR_3 TIM1_CH4_5 TIM2_CH1_ETR_4 TIM2_CH4_1 USART1_CK_2
10	5	13	10	14	PA4	I/O/A	-	PA4	ADC_IN4 OPA_O3 USART2_CK SPI1_NSS	TIM2_CH4_7 USART1_TX_2 USART1_RX_3 USART2_CK_2 USART2_CK_3
11	6	14	11	15	PA5	I/O/A	-	PA5	ADC_IN5 SPI1_SCK OPA_N3	TIM2_CH3_7 USART1_TX_3 USART1_RX_2 USART4_TX_1
12	20	15	12	16	PA6	I/O/A	-	PA6	ADC_IN6 TIM3_CH1 SPI1_MISO OPA_N1 OPA_P5	TIM1_BKIN_1 TIM2_CH4_4 TIM2_CH4_5 USART1_CK_3 USART1_CK_4 USART4_CK_1
13	7	17	13	17	PA7	I/O/A	-	PA7	SPI1_MOSI ADC_IN7 TIM3_CH2 OPA_N5 OPA_P3	TIM1_CH1N_1 TIM1_CH2_2 TIM1_CH2_3 USART4_CTS_1
-	8	16	14	18	PB0	I/O/A	-	PB0	ADC_IN8 TIM3_CH3 USART4_TX CMP1_OUT0 OPA_P1 OPA_O4	TIM1_CH2N_1 TIM1_CH2N_2 TIM1_CH2N_3 TIM3_CH3_1
14	9	18	15	19	PB1(7)(8)	I/O/A	-	PB1	ADC_IN9 TIM3_CH4 USART4_RX CMP1_N0 OPA_O1	TIM1_CH1_5 TIM1_CH4_2 TIM1_CH4_3 TIM1_CH2N_4 TIM1_CH3N_1 TIM3_CH4_1

Pin No.					Pin name	Pin type(1)	I/O level	Main function (After reset)	Default alternate function	Remapping function(10)
L103F8P6	L103F8U6	L103G8R6	L103K8U	L103C8T6						
-	-	-	16	20	PB2(5)	I/O/A	FT	PB2 BOOT1(5)	USART4_CK CMP1_P1	LPT_OUT_1
-	9	18	-	21	PB10(7)(8)	I/O/A	FT	PB10	USART3_TX I2C2_SCL CMP1_OUT1 CMP3_P1 OPA_N2 OPA_N6	TIM4_CH1_1 TIM2_CH3_2 TIM2_CH3_3
-	10	19	-	22	PB11	I/O/A	FT	PB11	CMP2_OUT1 CMP3_N1 OPA_N0 USART3_RX I2C2_SDA	TIM1_CH1N_2 TIM1_CH1N_3 TIM2_CH4_2 TIM2_CH4_3 TIM4_CH2_1 USART1_TX_4 I2C1_SDA_3
15	0	7	0	23	V_{SS}	P	-	V_{SS}		
16	19	6	1	24	V_{DD}	P	-	V_{DD}		
-	-	20	-	25	PB12	I/O	FT	PB12	CMP3_OUT1 TIM1_BKIN LPTIM_CH1 USART3_CK I2C2_SMBA SPI2_NSS	TIM1_CH3_4 TIM2_CH3_4 TIM2_CH3_5 USART1_TX_5 USART3_CK_2 USART3_CK_3 SPI1_NSS_3
-	11	21	-	26	PB13(8)	I/O	FT	PB13	TIM1_CH1N LPTIM_CH2 USART3_CTS SPI2_SCK	USART3_CTS_2 USART3_CTS_3
-	12	22	-	27	PB14	I/O/A	FT	PB14	TIM1_CH2N LPTIM_ETR USART3_RTS SPI2_MISO OPA_P2	USART3_RTS_2 USART3_RTS_3
-	13	23	17	28	PB15	I/O/A	FT	PB15	TIM1_CH3N LPTIM_OUT SPI2_MOSI OPA_P0	

Pin No.					Pin name	Pin type(1)	I/O level	Main function (After reset)	Default alternate function	Remapping function(10)
L103F8P6	L103F8U6	L103G8R6	L103K8U	L103C8T6						
-	14	24	18	29	PA8	I/O	FT	PA8	MCO TIM1_CH1 USART1_CK	TIM1_CH1_1 USART1_CK_1
-	15	25	19	30	PA9	I/O	FT	PA9	TIM1_CH2 USART1_TX	TIM1_CH2_1
-	18	26	20	31	PA10(8)	I/O	FT	PA10	TIM1_CH3 USART1_RX	TIM1_CH3_1
17	17	27	21	32	PA11(8)	I/O	FT	PA11	TIM1_CH4 USART1_CTS USBDM CAN1_RX	TIM1_CH4_1 USART1_CTS_1 USART2_TX_2 USART2_RX_3
18	16	28	22	33	PA12(7)(8)	I/O	FT	PA12	USART1_RTS USBDP CAN1_TX TIM1_ETR	USART1_RTS_1 TIM1_ETR_1 TIM1_BKIN_4 TIM1_BKIN_5 TIM2_CH1_ETR_5 TIM2_CH1_ETR_7 USART1_RX_5 USART2_TX_3 USART2_RX_2 I2C1_SDA_2 SPI1_NSS_2
19	17		23	34	PA13(7)(8)(9)	I/O	FT	SWDIO		TIM1_ETR_5 TIM1_BKIN_2 TIM1_BKIN_3 USART1_RTS_2 USART1_RTS_4 I2C1_SCL_2
-	-	-	-	35	V_{SS}	P	-	V_{SS}		
-	-	-	-	36	V_{DD}	P	-	V_{DD}		
20	16	1	24	37	PA14(7)(8)(9)	I/O	FT	SWCLK		TIM1_CH3_2 TIM1_CH3_3 TIM1_CH1N_4 TIM1_CH1N_5 USART1_CTS_4
-	-	-	25	38	PA15	I/O	FT	PA15		TIM2_CH1_ETR_1 TIM2_CH1_ETR_3 USART4_RTS_1 SPI1_NSS_1

Pin No.					Pin name	Pin type(1)	I/O level	Main function (After reset)	Default alternate function	Remapping function(10)
L103F8P6	L103F8U6	L103G8R6	L103K8U	L103C8T6						
-	-	4	26	39	PB3	I/O/A	FT	PB3	CMP1_N1 CMP2_N0 CMP3_N0 USART4_CTS	TIM2_CH2_1 TIM2_CH2_3 SPI1_SCK_1
-	-	-	27	40	PB4	I/O/A	FT	PB4	CMP3_OUT0 USART4_RTS	TIM3_CH1_1 SPI1_MISO_1
-	-	1	28	41	PB5(7)	I/O/A	FT	PB5	I2C1_SMBA CMP2_OUT0 CMP3_P0	LPTIM_CH1_1 TIM3_CH2_1 USART4_RX_1 I2C1_SMBA_2 I2C1_SMBA_3 SPI1_MOSI_1
19	11	2	29	42	PB6(8)(9)	I/O/A	FT	PB6	TIM4_CH1 I2C1_SCL CC1 CMP2_P1	LPTIM_ETR_1 USART1_TX_1 USART1_CK_5 SPI1_SCK_2 SPI1_SCK_3 TIM1_ETR_2 TIM1_ETR_4 TIM1_CH3_5
20	18	3	30	43	PB7(8)(9)	I/O/A	FT	PB7	TIM4_CH2 I2C1_SDA CC2 CMP2_N1	LPTIM_CH2_1 USART1_RX_1 USART1_CTS_3 USART1_CTS_5 SPI1_MOSI_2 SPI1_MOSI_3 TIM1_CH1_4 TIM1_CH3N_5
1	-	-	31	44	BOOT0(6)	I	-	BOOT0		
	-	5	32	45	PB8(6)	I/O/A	FT	PB8	TIM4_CH3 CMP2_P0	TIM4_CH3_1 USART1_RTS_3 USART1_RTS_5 SPI1_MISO_2 SPI1_MISO_3 CAN1_RX_2 TIM1_CH2_4 TIM1_CH2_5 TIM2_CH2_7
-	-	-	31	46	PB9(6)	I/O	FT	PB9	TIM4_CH4	TIM4_CH4_1 USART1_RX_4

Pin No.					Pin name	Pin type(1)	I/O level	Main function (After reset)	Default alternate function	Remapping function(10)
L103F8P6	L103F8U6	L103G8R6	L103K8U	L103C8T6						
										I2C1_SCL_3 CAN1_TX_2 TIM1_CH3N_2 TIM1_CH3N_3 TIM1_CH3N_4
-	-	-	-	47	V_{SS}	P	-	V_{SS}		
-	-	-	-	48	V_{DD}	P	-	V_{DD}		

Note 1: Explanation of table abbreviations:

I = TTL/CMOS level Schmitt input; O = CMOS level tri-state output;

A = analog signal input or output; P = power supply; FT = tolerant 5V;

Note 2: Both V_{DD} and V_{BAT} can be connected with an internal analog switch to supply power to the backup area and the pins PC13, PC14 and PC15. This analog switch can only pass a limited current (3mA). When powered by V_{DD}, PC14 and PC15 can be used for GPIO or LSE pins, and PC13 can be used as a general-purpose I/O port, TAMPER pin, RTC calibration clock, RTC alarm clock or second output; PC13, PC14 and PC15 can only work in 2MHz mode when they are used as GPIO output pins, and the maximum driving load is 30pF, and they cannot be used as current sources (such as driving LEDs). When the power is supplied by V_{BAT}, PC14 and PC15 can only be used for LSE pin, and PC13 can be used as TAMPER pin, RTC alarm clock or second output.

Note 3: these pins are in the main function state when the backup domain is powered on for the first time, and even if they are reset, the state of these pins is controlled by the backup domain register (these registers will not be reset by the master reset system). For specific information on how to control these IO ports, please refer to the relevant sections of the battery backup domain and BKP registers in the CH32L103RM manual.

Note 4: For the CH32L103C8T6 chip, pin 5 and pin 6 are configured as OSC_IN and OSC_OUT function pins by default after chip reset, and the software can reset these 2 pins to PD0 and PD1 functions; for the CH32L103K8U chip, pin 4 and pin 5 are configured as OSC_IN and OSC_OUT function pins by default after chip reset. The software can reset these two pins to PD0 and PD1 functions; For the CH32L103G8R6 chip, pin 8 is configured as the OSC_IN function pin by default after chip reset, and the software can reset these two pins to PD0 function; for the CH32L103F8P6 chip, pin 2 and pin 3 are configured as the OSC_IN and OSC_OUT function pins by default after chip reset, and the software can reset these two pins to PD0 and PD1 functions. For more detailed information, please refer to the Multiplexed Function I/O section and the Debug Setup section of the CH32L103RM manual.

Note 5: For chips where neither the BOOT0 nor BOOT1/PB2 pins are brought out, the internal BOOT0 pin is internally shorted to GND, while the BOOT1/PB2 pin is left floating. In low-power operation, it is recommended to configure PB2 as a pull-down input mode to prevent additional current flow.

For chips where the BOOT1/PB2 pin is brought out but the BOOT0 pin is not, the internal BOOT0 pin is internally shorted to GND.

For chips where the BOOT0 pin is brought out but the BOOT1/PB2 pin is not, the internal BOOT1/PB2 pin is internally shorted to GND. In low-power conditions, it is recommended to configure PB2 as a pull-down input to prevent additional current flow.

Note 6: For CH32L103K8U chips, BOOT0 and PB9 pins are short sealed inside the chip, and PB9 pins no longer support voltage 5V; for CH32L103F8P6 chips, BOOT0 and PB8 pins are short sealed inside the chip, and PB8 pins no longer support voltage 5V. It is recommended to connect an external 4.7K pull-down resistor to ensure that the BOOT0 is low during power-up in order to enter the program flash memory bootstrap mode. After normal operation, PB9 and PB8 pins can be used for output as needed.

Note 7: For the CH32L103G8R6 chip, the PA14 and PB5 pins are short sealed inside the chip, so it is forbidden to configure both IO as the output function; when the PB1 and PB10 pins are short sealed inside the chip, the PB10 pin no longer supports voltage tolerant 5V, and it is forbidden to configure both IO as the output function. The PA12 and PA13 pins are short-connected and sealed inside the chip, so it is forbidden to configure both IO as the output function.

Note 8: For the CH32L103F8U6 chip, the PB1 and PB10 pins are shorted and sealed inside the chip, so the PB10 pin no longer supports voltage 5V, and both IO are prohibited from being configured as the output function; the PB6 and PB13 pins are shorted and sealed inside the chip, and both IO are prohibited from being configured as the output function; PA12 and PA14 pins are shorted inside the chip, and both IO are prohibited from being configured as the output function. The PA11 and PA13 pins are short-connected and sealed inside the chip, so it is forbidden to configure both IO as the output function, while the PA10 and PB7 pins are short-connected and sealed inside the chip, so it is forbidden to configure both IO as the output function.

Note 9: For the CH32L103F8P6 chip, PA13 and PB6 pins are short-connected and sealed inside the chip, and both IO are prohibited from being configured as output functions; PA14 and PB7 pins are short-connected and sealed inside the chip, and both IO are prohibited from being configured as output functions.

Note 10: The underlined value of the remapping function indicates the configuration value of the corresponding bit in the AFIO register. For example, CAN1_RX_2 indicates that the corresponding bit configuration of the AFIO register is 10b.

Table 2-1-2 CH32M103 Pin definitions

Pin No. M103G8R6	Pin name	Pin type(1)	I/O level	Main function (After reset)	Default alternate function	Remapping function(2)
1	PA2	I/O/A	-	PA2	ADC_IN2 CMP1_P0 OPA_O2 TIM2_CH3 USART2_TX	TIM1_CH4_4 TIM2_CH2_4 TIM2_CH2_5 TIM2_CH3_1 USART1_CTS_2
2	PA3	I/O/A	-	PA3	ADC_IN3 OPA_O0	TIM1_ETR_3 TIM1_CH4_5

Pin No. M103G8R6	Pin name	Pin type(1)	I/O level	Main function (After reset)	Default alternate function	Remapping function(2)
					TIM2_CH4 USART2_RX	TIM2_CH1_ETR_4 TIM2_CH4_1 USART1_CK_2
3	PA4	I/O/A	-	PA4	ADC_IN4 OPA_O3 USART2_CK SPI1_NSS	TIM2_CH4_7 USART1_TX_2 USART1_RX_3 USART2_CK_2 USART2_CK_3
4	PA5	I/O/A	-	PA5	ADC_IN5 SPI1_SCK OPA_N3	TIM2_CH3_7 USART1_TX_3 USART1_RX_2 USART4_TX_1
5	PA6(6)	I/O/A	-	PA6	ADC_IN6 TIM3_CH1 SPI1_MISO OPA_N1 OPA_P5	TIM1_BKIN_1 TIM2_CH4_4 TIM2_CH4_5 USART1_CK_3 USART1_CK_4 USART4_CK_1
6	PA7(5)	I/O/A	-	PA7	SPI1_MOSI ADC_IN7 TIM3_CH2 OPA_N5 OPA_P3	TIM1_CH1N_1 TIM1_CH2_2 TIM1_CH2_3 USART4_CTS_1
7	PB0	I/O/A	-	PB0	ADC_IN8 TIM3_CH3 USART4_TX CMP1_OUT0 OPA_P1 OPA_O4	TIM1_CH2N_1 TIM1_CH2N_2 TIM1_CH2N_3 TIM3_CH3_1
8	PB1(4)	I/O/A	-	PB1	ADC_IN9 TIM3_CH4 USART4_RX CMP1_N0 OPA_O1	TIM1_CH1_5 TIM1_CH4_2 TIM1_CH4_3 TIM1_CH2N_4 TIM1_CH3N_1 TIM3_CH4_1
	PB5(4)	I/O/A	FT	PB5	I2C1_SMBA CMP2_OUT0 CMP3_P0	LPTIM_CH1_1 TIM3_CH2_1 USART4_RX_1

Pin No. M103G8R6	Pin name	Pin type(1)	I/O level	Main function (After reset)	Default alternate function	Remapping function(2)
						I2C1_SMBA_2 I2C1_SMBA_3 SPI1_MOSI_1
9	PB10(5)	I/O/A	FT	PB10	USART3_TX I2C2_SCL CMP1_OUT1 CMP3_P1 OPA_N2 OPA_N6	TIM4_CH1_1 TIM2_CH3_2 TIM2_CH3_3
10	PB11	I/O/A	FT	PB11	CMP2_OUT1 CMP3_N1 OPA_N0 USART3_RX I2C2_SDA	TIM1_CH1N_2 TIM1_CH1N_3 TIM2_CH4_2 TIM2_CH4_3 TIM4_CH2_1 USART1_TX_4 I2C1_SDA_3
11	V_{DD}	P	-	V_{DD}		
12	V_{SS}	P	-	V_{SS}		
13	V_{HREG}	P	-	V_{HREG}		
14	V_{HV}	P	-	V_{HV}		
15	HO1 (PA8)	O	FT	HO1		
16	LO1 (PB13)	O	FT	LO1		
17	HO2 (PA9)	O	FT	HO2		
18	LO2 (PB14)	O	FT	LO2		
19	HO3 (PA10)	O	FT	HO3		
20	LO3 (PB15)	O	FT	LO3		
21	PA11(4)	I/O	FT	PA11	TIM1_CH4 USART1_CTS USBDM CAN1_RX	TIM1_CH4_1 USART1_CTS_1 USART2_TX_2 USART2_RX_3
	PA13(4)	I/O	FT	SWDIO		TIM1_ETR_5

Pin No. M103G8R6	Pin name	Pin type(1)	I/O level	Main function (After reset)	Default alternate function	Remapping function(2)
						TIM1_BKIN_2 TIM1_BKIN_3 USART1_RTS_2 USART1_RTS_4 I2C1_SCL_2
22	PA12(4)	I/O	FT	PA12	USART1_RTS USBDP CAN1_TX TIM1_ETR	USART1_RTS_1 TIM1_ETR_1 TIM1_BKIN_4 TIM1_BKIN_5 TIM2_CH1_ETR_5 TIM2_CH1_ETR_7 USART1_RX_5 USART2_TX_3 USART2_RX_2 I2C1_SDA_2 SPI1_NSS_2
	PA14(4)	I/O	FT	SWCLK		TIM1_CH3_2 TIM1_CH3_3 TIM1_CH1N_4 TIM1_CH1N_5 USART1_CTS_4
23	PB3	I/O/A	FT	PB3	CMP1_N1 CMP2_N0 CMP3_N0 USART4_CTS	TIM2_CH2_1 TIM2_CH2_3 SPI1_SCK_1
24	PB6	I/O/A	FT	PB6	TIM4_CH1 I2C1_SCL CC1 CMP2_P1	LPTIM_ETR_1 USART1_TX_1 USART1_CK_5 SPI1_SCK_2 SPI1_SCK_3 TIM1_ETR_2 TIM1_ETR_4 TIM1_CH3_5
25	PB7	I/O/A	FT	PB7	TIM4_CH2 I2C1_SDA CC2 CMP2_N1	LPTIM_CH2_1 USART1_RX_1 USART1_CTS_3 USART1_CTS_5 SPI1_MOSI_2

Pin No. M103G8R6	Pin name	Pin type(1)	I/O level	Main function (After reset)	Default alternate function	Remapping function(2)
						SPI1_MOSI_3 TIM1_CH1_4 TIM1_CH3N_5
26	PB8	I/O/A	FT	PB8	TIM4_CH3 CMP2_P0	TIM4_CH3_1 USART1_RTS_3 USART1_RTS_5 SPI1_MISO_2 SPI1_MISO_3 CAN1_RX_2 TIM1_CH2_4 TIM1_CH2_5 TIM2_CH2_7
27	PA0-WKUP(6)	I/O/A	-	PA0	WKUP ADC_IN0 TIM2_CH1_ETR USART2_CTS OPA_P4	TIM2_CH1_ETR_2 USART2_CTS_2 USART2_CTS_3
28	PA1	I/O/A	-	PA1	ADC_IN1 TIM2_CH2 USART2_RTS OPA_N4	TIM1_CH1_2 TIM1_CH1_3 TIM2_CH2_2 TIM1_CH2N_5 USART2_RTS_2 USART2_RTS_3

Note 1: Explanation of table abbreviations:

I = TTL/CMOS level Schmitt input; O = CMOS level tri-state output;

A = analog signal input or output; P = power supply; FT = tolerant 5V;

Note 2: The value underlined by the remapping function indicates the configuration value of the corresponding bit in the AFIO register. For example, CAN1_RX_2 indicates that the corresponding bit of AFIO register is configured as 10b.

Note 3: For chips where neither the BOOT0 nor BOOT1/PB2 pins are brought out, the internal BOOT0 pin is internally shorted to GND, while the BOOT1/PB2 pin is left floating. In low-power operation, it is recommended to configure PB2 as a pull-down input mode to prevent additional current flow.

For chips where the BOOT1/PB2 pin is brought out but the BOOT0 pin is not, the internal BOOT0 pin is internally shorted to GND.

For chips where the BOOT0 pin is brought out but the BOOT1/PB2 pin is not, the internal BOOT1/PB2 pin is internally shorted to GND. In low-power conditions, it is recommended to configure PB2 as a pull-down input to

prevent additional current flow.

Note 4: For the CH32M103G8R6 chip, the PB1 and PB5 pins are short-sealed inside the chip, at this time, the PB5 pin no longer supports the tolerate voltage of 5V, and it is forbidden to configure both IO as output functions; PA11 and PA13 pins are short sealed inside the chip, and it is forbidden to configure both IO as output function; PA12 and PA14 pins are short sealed inside the chip, and it is forbidden to configure both IO as output function.

Note 5: For CH32M103G8R6 chip, pins (PA7, PB10) are usually selected as a group of positive and negative inputs of the operational amplifier respectively.

Note 6: For CH32M103G8R6 chip, pins (PA0, PA6) can also be selected as a group of positive and negative inputs of the operational amplifier respectively.

Table 2-3 Pin alternate and remapping functions

Pin name	Pin description
V_{HV}	The main power input and the power input of the gate driver need to be externally connected with a capacitor of at least 3.3uF, and 10uF is recommended.
V_{HREG}	The power input of the internal voltage regulator must supply power, generally through a resistor or directly connected to V_{HV}.
V_{DD}	The output of the internal voltage regulator needs an external MLCC capacitor with a capacity of at least 4.7uF, and 10uF is recommended.
LO1,LO2,LO3	The output of the internal low-side gate driver is used to drive the gate of N-type MOSFET.
HO1,HO2,HO3	The output of the internal high-side gate driver is used to drive the gate of the P-type MOSFET.

2.3 Pin Alternate Functions

Note: The pin function in the table below refer to all functions and does not involve specific model(s). There are differences in peripheral resources between different models. Please confirm whether this function is available according to the particular model's resource table before viewing this table.

Table 2-3 Pin alternate and remapping functions

Alternate / Pin	ADC	TIM1	TIM2/3/4	USART	CMP	SYS	I2C	SPI	CAN1	USB	OPA	LPTIM
PA0	ADC_IN0		TIM2_CH1_ETR TIM2_CH1_ETR_2	USART2_CTS USART2_CTS_2 USART2_CTS_3		WKUP					OPA_P4	
PA1	ADC_IN1	TIM1_CH1_2 TIM1_CH1_3 TIM1_CH2N_5	TIM2_CH2 TIM2_CH2_2	USART2_RTS USART2_RTS_2 USART2_RTS_3							OPA_N4	
PA2	ADC_IN2	TIM1_CH4_4	TIM2_CH2_4 TIM2_CH2_5 TIM2_CH3 TIM2_CH3_1	USART1_CTS_2 USART2_TX	CMP1_P0						OPA_O2	
PA3	ADC_IN3	TIM1_ETR_3 TIM1_CH4_5	TIM2_CH1_ETR_4 TIM2_CH4 TIM2_CH4_1	USART1_CK_2 USART2_RX							OPA_O0	
PA4	ADC_IN4		TIM2_CH4_7	USART1_TX_2 USART1_RX_3 USART2_CK USART2_CK_2 USART2_CK_3				SPI1_NSS			OPA_O3	
PA5	ADC_IN5		TIM2_CH3_7	USART1_TX_3 USART1_RX_2 USART4_TX_1				SPI1_SCK			OPA_N3	
PA6	ADC_IN6	TIM1_BKIN_1	TIM2_CH4_4 TIM2_CH4_5 TIM3_CH1	USART1_CK_3 USART1_CK_4 USART4_CK_1				SPI1_MISO			OPA_N1 OPA_P5	
PA7	ADC_IN7	TIM1_CH2_2 TIM1_CH2_3 TIM1_CH1N_1	TIM3_CH2	USART4_CTS_1				SPI1_MOSI			OPA_N5 OPA_P3	
PA8		TIM1_CH1 TIM1_CH1_1		USART1_CK USART1_CK_1		MCO						
PA9		TIM1_CH2 TIM1_CH2_1		USART1_TX								
PA10		TIM1_CH3 TIM1_CH3_1		USART1_RX								
PA11		TIM1_CH4 TIM1_CH4_1		USART1_CTS USART1_CTS_1 USART2_TX_2 USART2_RX_3					CAN1_RX	USBDM		
PA12		TIM1_BKIN_4	TIM2_CH1_ETR_5	USART1_RX_5			I2C1_SDA_2	SPI1_NSS_2	CAN1_T	USBDP		

Alternate Pin	ADC	TIM1	TIM2/3/4	USART	CMP	SYS	I2C	SPI	CAN1	USB	OPA	LPTIM
		TIM1_BKIN_5 TIM1_ETR TIM1_ETR_1	TIM2_CH1_ETR_7	USART1_RTS USART1_RTS_1 USART2_TX_3 USART2_RX_2					X			
PA13		TIM1_ETR_5 TIM1_BKIN_2 TIM1_BKIN_3		USART1_RTS_2 USART1_RTS_4		SWDIO	I2C1_SCL_2					
PA14		TIM1_CH3_2 TIM1_CH3_3 TIM1_CH1N_4 TIM1_CH1N_5		USART1_CTS_4		SWCLK						
PA15			TIM2_CH1_ETR_1 TIM2_CH1_ETR_3	USART4_RTS_1				SPI1_NSS_1				
PB0	ADC_IN8	TIM1_CH2N_1 TIM1_CH2N_2 TIM1_CH2N_3	TIM3_CH3 TIM3_CH3_1	USART4_TX	CMP1_OUT0						OPA_P1 OPA_O4	
PB1	ADC_IN9	TIM1_CH1_5 TIM1_CH4_2 TIM1_CH4_3 TIM1_CH2N_4 TIM1_CH3N_1	TIM3_CH4 TIM3_CH4_1	USART4_RX	CMP1_N0						OPA_O1	
PB2				USART4_CK	CMP1_P1		BOOT1					LPTIM_OUT_1
PB3			TIM2_CH2_1 TIM2_CH2_3	USART4_CTS	CMP1_N1 CMP2_N0 CMP3_N0			SPI1_SCK_1				
PB4			TIM3_CH1_1	USART4_RTS	CMP3_OUT0			SPI1_MISO_1				
PB5			TIM3_CH2_1	USART4_RX_1	CMP2_OUT0 CMP3_P0		I2C1_SMBA I2C1_SMBA_2 I2C1_SMBA_3	SPI1_MOSI_1				LPTIM_CH1_1
PB6		TIM1_ETR_2 TIM1_ETR_4 TIM1_CH3_5	TIM4_CH1	USART1_TX_1 USART1_CK_5	CMP2_P1		I2C1_SCL	SPI1_SCK_2 SPI1_SCK_3		CC1		LPTIM_ETR_1
PB7		TIM1_CH1_4 TIM1_CH3N_5	TIM4_CH2	USART1_RX_1 USART1_CTS_3 USART1_CTS_5	CMP2_N1		I2C1_SDA	SPI1_MOSI_2 SPI1_MOSI_3		CC2		LPTIM_CH2_1
PB8		TIM1_CH2_4 TIM1_CH2_5	TIM4_CH3 TIM4_CH3_1 TIM2_CH2_7	USART1_RTS_3 USART1_RTS_5	CMP2_P0			SPI1_MISO_2 SPI1_MISO_3	CAN1_RX_2			
PB9		TIM1_CH3N_2 TIM1_CH3N_3 TIM1_CH3N_4	TIM4_CH4 TIM4_CH4_1	USART1_RX_4			I2C1_SCL_3		CAN1_TX_2			
PB10			TIM4_CH1_1 TIM2_CH3_2	USART3_TX	CMP1_OUT1 CMP3_P1		I2C2_SCL				OPA_N2 OPA_N6	

Alternate / Pin	ADC	TIM1	TIM2/3/4	USART	CMP	SYS	I2C	SPI	CAN1	USB	OPA	LPTIM
			TIM2_CH3_3									
PB11		TIM1_CH1N_2 TIM1_CH1N_3	TIM2_CH4_2 TIM2_CH4_3 TIM4_CH2_1	USART1_TX_4 USART3_RX	CMP2_OUT1 CMP3_N1		I2C1_SDA_3 I2C2_SDA				OPA_N0	
PB12		TIM1_CH3_4 TIM1_BKIN	TIM2_CH3_4 TIM2_CH3_5	USART1_TX_5 USART3_CK USART3_CK_2 USART3_CK_3	CMP3_OUT1		I2C2_SMBA	SPI1_NSS_3 SPI2_NSS				LPTIM_CH1
PB13		TIM1_CH1N		USART3_CTS USART3_CTS_2 USART3_CTS_3				SPI2_SCK				LPTIM_CH2
PB14		TIM1_CH2N		USART3_RTS USART3_RTS_2 USART3_RTS_3				SPI2_MISO			OPA_P2	LPTIM_ETR
PB15		TIM1_CH3N						SPI2_MOSI			OPA_P0	LPTIM_OUT
PC13						RTC TAMPER						
PC14						OSC32_I N						
PC15						OSC32_O UT						
PD0				USART3_TX_3 USART3_RX_2		OSC_IN			CAN1_R X_3			
PD1				USART3_TX_2 USART3_RX_3		OSC_OU T			CAN1_T X_3			

Chapter 3 Electrical Characteristics

3.1 Test Conditions

Unless otherwise specified and indicated, all voltages are referenced to V_{SS}.

All minimum and maximum values are guaranteed in the worst conditions of ambient temperature, supply voltage and clock frequency.

The typical value of CH32L103 is based on the ambient temperature of 25℃ and V_{DD} = 3.3V.

The typical value of CH32M103G8R6 is based on the ambient temperature of 25℃, the power supply V_{HV} = 15V and V_{HREG} = 7V, and the environment with V_{DD} = 3.3V for design guidance.

The data based on comprehensive evaluation, design simulation or technology characteristics are not tested in production. On the basis of comprehensive evaluation, the minimum and maximum values refer to sample tests. Unless otherwise specified that is tested, the characteristic parameters are guaranteed by comprehensive evaluation or design.

Power supply scheme:

Figure 3-1-1 CH32L103 Typical circuit for conventional power supply

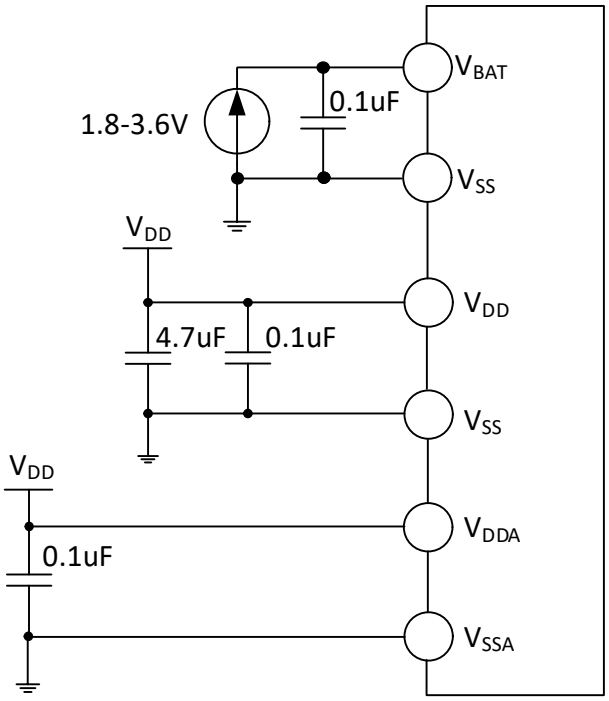

Figure 3-1-1 CH32M103 Typical circuit for conventional power supply (The resistor in the figure is optional, which is used to share the voltage drop and reduce the chip heating.)

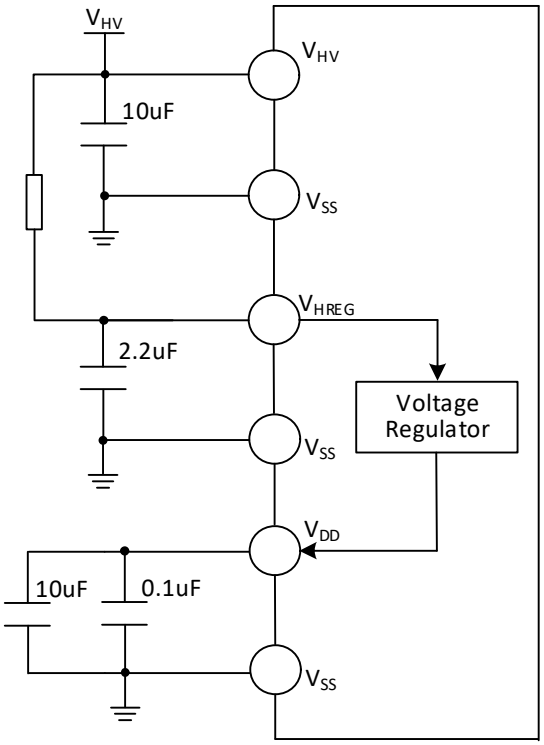

3.2 Absolute Maximum Ratings

Critical or exceeding the absolute maximum value may cause the chip to operate improperly or even be damaged.

Table 3-1 Absolute maximum ratings

Symbol	Description		Min.	Max.	Unit
T_A	Ambient temperature during operation	Chips with a model number ending in 6	-40	85	℃
		Chips with a model number ending in 7	-40	105	℃
T_S	Ambient temperature during storage		-40	125	℃
V_{DD}	External mains supply voltage (including V_{DDA} and V_{DD})	CH32L103	-0.3	4.0	V
	Output voltage of internal voltage regulator	CH32M103G8R6	-0.3	4.0	V
V_{HV}	Power supply voltage of high voltage power supply and gate driver	CH32M103G8R6	-0.4	28	V
V_{HREG}	Input power supply voltage of internal voltage regulator	CH32M103G8R6	-0.4	28	V
V_{IN}	Input voltage on FT (tolerate 5V) pin.		V_{SS}-0.3	5.5	V
	Voltage on other pins		V_{SS}-0.3	V_{DD}+0.3	V

V_{HO}	Output voltage of high-side driver	CH32M103G8R6	-0.4	V_{HV}+0.4	V
V_{LO}	Output voltage of low-side driver	CH32M103G8R6	-0.4	V_{HV}+0.4	V
$\|\Delta V_{DD_x}\|$	Voltage difference between V_{DD} of main power supply pin			50	mV
$\|\Delta V_{SS_x}\|$	Voltage difference between different grounding pins			50	mV
$V_{ESD(HBM)}$	ESD Electrostatic Discharge Voltage (HBM) on normal I/O Pins		4K		V
	ESD Electrostatic Discharge Voltage (HBM) on USB Pins		4K		V
	ESD Electrostatic Discharge Voltage (HBM) on dedicated pin	CH32M103G8R6	2K		V
I_{AVVHV}	V_{HV} pin continuous input current			50	mA
I_{VDD}	Total current through V_{DD}/V_{DDA} power line (supply current)			150	mA
I_{Vss}	Total current through V_{SS} ground line (outgoing current)			150	mA
I_{IO}	Pour current on arbitrary I/O and control pins			25	mA
	Source current on arbitrary I/O and control pins			-25	mA
$I_{INJ(PIN)}$	NRST pin injection current			+/-5	mA
	OSC_IN pin of HSE and OSC_IN pin of LSE injection current			+/-5	mA
	Injection current on other pins			+/-5	mA
$\sum I_{INJ(PIN)}$	Total injection current on all IO and control pins			+/-25	mA

3.3 Electrical Characteristics

3.3.1 Operating Conditions

Table 3-2-1 General operating conditions

Symbol	Parameter	Condition	Min.	Max.	Unit
F_{HCLK}	Internal HB clock frequency			96	MHz
F_{PCLK1}	Internal PB1 clock frequency			96	MHz
F_{PCLK2}	Internal PB2 clock frequency			96	MHz
V_{DD}	Standard operating voltage		1.8	3.6	V
		Use USB	3.0	3.6	
V_{DDA}	Operating voltage of the analog section	Without TS	1.8	3.6	V
	Operating voltage of the analog section	With TS	2.0	3.6	
V_{BAT}(1)	Backup unit operating voltage		1.8	3.6	V
T_A	Ambient temperature	Chips with a model number ending in 6	-40	85	℃
		Chips with a model number ending in 7	-40	105	℃
T_J	Junction temperature range	Chips with a model number ending in 6	-40	105	℃
		Chips with a model number ending in 7	-40	115	℃

Note: 1. The battery to V_{BAT} cable should be as short as possible.

Table 3-2-2 Other power supply operating conditions (only for CH32M103G8R6 chip)

Symbol	Parameter	Condition	Min.	Typ.	Max.	Unit
V_{HV}	Power supply voltage of gate driver		6	6~24	26	V
V_{HREG}	Input power supply voltage of internal voltage regulator		6	7	26	V
V_{DD}	Output voltage of internal voltage regulator		3.23	3.3	3.37	V
I_{DD}	Load current of internal voltage regulator (including all loads such as common I/O and MCU core)	Pay attention to heat dissipation			30	mA

Table 3-3 Power-on and power-down conditions

Symbol	Parameter	Condition	Min.	Max.	Unit
t_{VDD}	V_{DD} rising speed		0	∞	us/V
	V_{DD} falling speed		70	∞	

Note: 1. The battery to V_{BAT} cable should be as short as possible.

3.3.2 Built-in Reset and Power Control Block Characteristics

Table 3-4 Reset and voltage monitor (For PDR, select high threshold gear)

Symbol	Parameter	Condition	Min.	Typ.	Max.	Unit
V_{PVD}(2)	Level selection of programmable voltage detector	PLS[2:0] = 000 (rising edge)		1.75		V
		PLS[2:0] = 000 (falling edge)		1.70		V
		PLS[2:0] = 001 (rising edge)		1.93		V
		PLS[2:0] = 001 (falling edge)		1.87		V
		PLS[2:0] = 010 (rising edge)		2.14		V
		PLS[2:0] = 010 (falling edge)		2.08		V
		PLS[2:0] = 011 (rising edge)		2.35		V
		PLS[2:0] = 011 (falling edge)		2.28		V
		PLS[2:0] = 100 (rising edge)		2.54		V
		PLS[2:0] = 100 (falling		2.46		V

		edge)				
		PLS[2:0] = 101 (rising edge)		2.72		V
		PLS[2:0] = 101 (falling edge)		2.63		V
		PLS[2:0] = 110 (rising edge)		2.92		V
		PLS[2:0] = 110 (falling edge)		2.83		V
		PLS[2:0] = 111 (rising edge)		3.1		V
		PLS[2:0] = 111 (falling edge)		3.01		V
$V_{PVDhyst}$(1)	PVD hysteresis		0.05	0.08	0.1	V
$V_{POR/PDR}$(2)	Power-on/power-down reset threshold	Rising edge	1.62	1.73	1.80	V
		Falling edge	1.45(3)	1.55	1.65	V
$V_{PDRhyst}$(1)	PDR hysteresis			180	600	mV
$t_{RSTTEMPO}$	Reset duration		6	6.5	30	ms

Note: 1. Design parameters;

2. Normal temperature test value.

3. When in STOP mode 3, stop mode 4 or STANDBY mode, the minimum value of $V_{POR/PDR}$ at the falling edge is 1.2V.

3.3.3 Embedded Reference Voltage

Table 3-5 Embedded reference voltage

Symbol	Parameter	Condition	Min.	Typ.	Max.	Unit
V_{REFINT}	Built-in reference voltage	T_A = -40℃ ~ 105℃	1.17	1.2	1.23	V
$T_{S_vrefint}$	ADC sampling time when reading the internal reference voltage	Slow sampling recommended			20	us

3.3.4 Supply Current Characteristics

Current consumption is a comprehensive index of a variety of parameters and factors. These parameters and factors include operating voltage, ambient temperature, I/O pin load, software configuration of the product, the operating frequency, flip rate of the I/O pin, the location of the program in memory and the executed code, etc. The current consumption measurement method is as follows:

Figure 3-2-1 Current consumption measurement

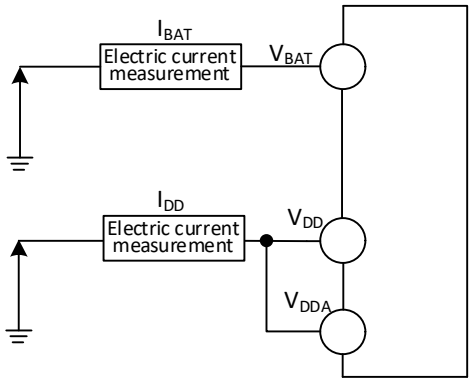

Figure 3-2-2 CH32M103G8R6 Current consumption measurement

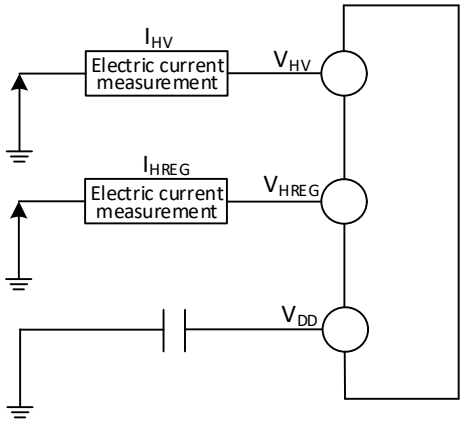

CH32L103 is in the following conditions:

Tested with room temperature V_{DD} = 3.3V: Bit CC1_PD of R16_PORT_CC1 and Bit CC2_PD of R16_PORT_CC2 are both = 0, all I/O pins are configured as pull-down inputs running on the high-speed internal RC oscillator HSI with HSI = 8M. F_{PLCK1}=F_{HCLK}/2 and F_{PLCK2}=F_{HCLK} to enable or disable the power consumption of all peripheral clocks.

CH32M103G8R6 is in the following conditions:

In V_{HV} = 15V, V_{HREG} = 7V, V_{DD} = 3.3V condition, during the test: bit CC1_PD of R16_PORT_CC1 and bit CC2_PD of R16_PORT_CC2 are both = 0, and all I/O pins are configured as pull-down inputs, running in high-speed internal RC oscillators HSI, HSI = 8M, F_{PLCK1}=F_{HCLK}/2 and F_{PLCK2} = FHCLK, enabling or turning off the power consumption of all peripheral clocks.

Note: For pins not packaged in small package models or pins that are packaged but unused, it is recommended to configure them as pull-up inputs or pull-down inputs. Failure to do so may affect current specifications. For specific procedures, please refer to the EVT low-power example code.

Table 3-6 Data Processing Code Running from FLASH, Setting LDOTRIM[1:0]=10, LDO_EC=0

Symbol	Parameter	Condition			Typ.		Unit
		HSILP	PLLON	F_{HCLK}	Enable all peripherals	Disable all peripherals	
I_{DD}(1)	Supply current in Run mode	0	1	96MHz	7.46	4.70	mA
		0	1	48MHz	5.13	3.77	
		0	1	8MHz	2.23	1.95	
		0	1	1MHz	1.46	1.43	
		1	1	1MHz	1.27	1.24	
		0	0	8MHz	2.14	1.87	
		0	0	1MHz	1.37	1.34	
		1	0	1MHz	1.19	1.17	
	Supply current in sleep mode (when peripherals are powered and clock is held)	0	1	96MHz	5.58	2.82	mA
		0	1	48MHz	3.52	2.14	
		0	1	8MHz	1.74	1.47	
		0	1	1MHz	1.40	1.37	
		1	1	1MHz	1.21	1.18	
		0	0	8MHz	1.65	1.38	
		0	0	1MHz	1.31	1.28	
		1	0	1MHz	1.13	1.10	

Note: 1. The above are CH32L103 measured parameters.

2. When configuring CC1_PD and CC2_PD = 1, the current consumption of CH32L103K8U and F8U6 chips will be about 5uA; on the basis of the above table; When other CH32L103 chips are configured with CC1_PD and CC2_PD = 1 and PB6/CC1 and PB7/CC2 pins are pull-down inputs, their current consumption will be increased by about 5uA on the basis of the above table.

Table 3-7-1 Data processing code runs from SRAM, FLASH enters low-power mode(1), Set LDOTRIM[1:0]=10

Symbol	Parameter	Condition			Typ.		Unit
		HSILP	PLLON	F_{HCLK}(3)	Enable all peripherals	Disable all peripherals	
I_{DD}(2)	Supply current in Run mode	0	1	96MHz	7.08	4.29	mA
		0	1	48MHz	3.77	2.37	
		0	1	8MHz	0.91	0.63	
		0	1	1MHz	0.40	0.37	
		1	1	8MHz	0.68	0.46	
		1	1	1MHz	0.21	0.17	
		0	0	8MHz	0.83	0.56	
		0	0	1MHz	0.31	0.28	
		1	0	1MHz	0.13	0.10	
		1	0	500KHz	0.10	0.08	
		1	0	125KHz	0.07	0.07	
	Supply current in sleep mode	0	1	96MHz	4.60	1.81	mA
		0	1	48MHz	2.52	1.13	

	(when peripherals are powered and clock is held)	0	1	8MHz	0.72	0.44	
		0	1	1MHz	0.38	0.34	
		1	1	8MHz	0.48	0.25	
		1	1	1MHz	0.18	0.15	
		0	0	8MHz	0.63	0.35	
		0	0	1MHz	0.28	0.26	
		1	0	1MHz	0.11	0.07	
		1	0	500KHz	0.08	0.07	
		1	0	125KHz	0.07	0.06	

Note: 1. When FLASH_LP_REG=1 and FLASH_LP=1, FLASH enters low-power mode.

2. The above are CH32L103 measured parameters.

3. When FHCLK exceeds 16MHz, set LDO_EC=0, otherwise set LDO_EC=1 by default.

4. When configuring CC1_PD and CC2_PD = 1, the current consumption of CH32L103K8U and F8U6 chips will be about 5uA; on the basis of the above table; When other CH32L103 chips are configured with CC1_PD and CC2_PD = 1 and PB6/CC1 and PB7/CC2 pins are pull-down inputs, their current consumption will be increased by about 5uA on the basis of the above table.

Table 3-7-2 Data processing code runs from SRAM, FLASH does not enter low-power mode(1), set LDOTRIM[1:0]=10

Symbol	Parameter	Condition			Typ.		Unit
		HSILP	PLLON	F_{HCLK}(3)	Enable all peripherals	Disable all peripherals	
I_{DD}(2)	Supply current in Run mode	0	1	96MHz	7.87	5.09	mA
		0	1	48MHz	4.68	3.28	
		0	1	8MHz	1.97	1.69	
		0	1	1MHz	1.44	1.40	
		1	1	8MHz	1.71	1.47	
		1	1	1MHz	1.23	1.20	
		0	0	8MHz	1.85	1.57	
		0	0	1MHz	1.34	1.31	
		1	0	1MHz	1.16	1.13	
	Supply current in sleep mode (when peripherals are powered and clock is held)	0	1	96MHz	5.64	2.84	mA
		0	1	48MHz	3.56	2.16	
		0	1	8MHz	1.75	1.48	
		0	1	1MHz	1.41	1.38	
		1	1	8MHz	1.51	1.28	
		1	1	1MHz	1.21	1.18	
		0	0	8MHz	1.66	1.39	
		0	0	1MHz	1.32	1.29	
		1	0	1MHz	1.14	1.11	

Note: 1. When FLASH_LP_REG=0, FLASH does not enter low-power mode.

2. The above are CH32L103 measured parameters.

3. When FHCLK exceeds 16MHz, set LDO_EC=0, otherwise set LDO_EC=1 by default.

4. When configuring CC1_PD and CC2_PD = 1, the current consumption of CH32L103K8U and F8U6 chips will be about 5uA; on the basis of the above table; When other CH32L103 chips are configured with CC1_PD and CC2_PD = 1 and PB6/CC1 and PB7/CC2 pins are pull-down inputs, their current consumption will be increased by about 5uA on the basis of the above table.

Table 3-7-3 Data processing code runs from SRAM, FLASH enters low-power mode(1), Setting LDOTRIM[1:0]=01

Symbol	Parameter	Condition			Typ.		Unit
		HSILP	PLLON	F_{HCLK}(3)	Enable all peripherals	Disable all peripherals	
I_{DD}(2)(4)	Supply current in Run mode	0	1	96MHz	6.32	3.78	mA
		0	1	48MHz	3.41	2.11	
		0	1	8MHz	0.86	0.60	
		0	1	1MHz	0.39	0.36	
		1	1	8MHz	0.63	0.42	
		1	1	1MHz	0.20	0.16	
		0	0	8MHz	0.76	0.52	
		0	0	1MHz	0.30	0.27	
		1	0	1MHz	0.13	0.09	
		1	0	500KHz	0.09	0.08	
		1	0	125KHz	0.07	0.06	
	Supply current in sleep mode (when peripherals are powered and clock is held)	0	1	96MHz	4.22	1.67	mA
		0	1	48MHz	2.33	1.05	
		0	1	8MHz	0.68	0.42	
		0	1	1MHz	0.37	0.34	
		1	1	8MHz	0.45	0.24	
		1	1	1MHz	0.17	0.14	
		0	0	8MHz	0.59	0.34	
		0	0	1MHz	0.27	0.25	
		1	0	1MHz	0.10	0.07	
		1	0	500KHz	0.08	0.06	
		1	0	125KHz	0.06	0.06	

Note: 1. When FLASH_LP_REG=1 and FLASH_LP=1, FLASH enters low-power mode.

2. The above are CH32L103 measured parameters.

3. When FHCLK exceeds 16MHz, set LDO_EC=0, otherwise set LDO_EC=1 by default.

4. When configuring CC1_PD and CC2_PD = 1, the current consumption of CH32L103K8U and F8U6 chips will be about 5uA; on the basis of the above table; When other CH32L103 chips are configured with CC1_PD and CC2_PD = 1 and PB6/CC1 and PB7/CC2 pins are pull-down inputs, their current consumption will be increased by about 5uA on the basis of the above table.

Table 3-8-1 Data processing code runs from FLASH, typical current consumption in Stop and Standby mode

Symbol	Parameter	Condition								Typ.	Unit
		HIS, HSE, LSI, LSE	RAMLV	R18KSTY	R2KSTY	LDO_EC	LPDS	PDDS	LDO		
I_{DD}	Supply current in STOP mode1	All disabled	×	×	×	0	0	0	10	34.63	uA
	Supply current in STOP mode2	All disabled	×	×	×	1	0	0	10	23.88	
	Supply current in STOP mode3	All disabled	0	×	×	×	1	0	10	4.55	
	Supply current in STOP mode4	All disabled	1	×	×	×	1	0	10	4.08	
	Supply current in STANDBY mode	Only enable LSI	0	1	1	×	×	1	10	2.97	uA
		All disabled	0	1	1	×	×	1	10	2.82	
		All disabled	1	1	1	×	×	1	10	1.89	
		Only enable LSI	1	0	1	×	×	1	10	0.74	
		All disabled	1	0	1	×	×	1	10	0.59	
		Only enable LSI	×	0	0	×	×	1	10	0.51	
		All disabled	×	0	0	×	×	1	10	0.37	
I_{DD_VBAT}	Supply current for backup domain (Remove V_{DD} and V_{DDA} and use only V_{BAT} supply)	Only enable LSE	×	0	0	×	×	1	10	0.75	uA
		All disabled	×	0	0	×	×	1	10	0.37	

Note: 1. The above are CH32L103 measured parameters.

2. When configuring CC1_PD and CC2_PD = 1, the current consumption of CH32L103K8U and F8U6 chips will be about 5uA; on the basis of the above table; When other CH32L103 chips are configured with CC1_PD and CC2_PD = 1 and PB6/CC1 and PB7/CC2 pins are pull-down inputs, their current consumption will be increased by about 5uA on the basis of the above table.

3. CH32L103K8U and F8U6 have built-in 5.1Ω pull-down resistors. Only for products with the penultimate lot number of 1, the configuration in Note 2 is not needed because the function of the 5.1Ω pull-down resistor is forced to be turned on in standby mode. The current consumption of CH32L103K8U and F8U6 chips in standby mode will be increased by about 5uA on the basis of the above table.

Table 3-8-2 Data processing code runs from FLASH, typical current consumption in Stop mode

Symbol	Parameter	Condition								Typ.	Unit
		HIS, HSE LSI, LSE	RAMLV	R18KSTY	R2KSTY	LDO_EC	LPDS	PDDS	LDO		
I_{DD}	Supply current in STOP mode1	All disabled	Invalid	Invalid	Invalid	0	0	0	01	30.94	uA
	Supply current in STOP mode2	All disabled	Invalid	Invalid	Invalid	1	0	0	01	20.22	

Note: 1. The above are CH32L103 measured parameters.

2. When configuring CC1_PD and CC2_PD = 1, the current consumption of CH32L103K8U and F8U6 chips will be about 5uA; on the basis of the above table; When other CH32L103 chips are configured with CC1_PD and CC2_PD = 1 and PB6/CC1 and PB7/CC2 pins are pull-down inputs, their current consumption will be increased by about 5uA on the basis of the above table.

Table 3-9 Other typical current consumption (Compared with CH32L103, increased current consumption of CH32M103G8R6)

Symbol	Parameter	Condition	Min.	Typ.	Max.	Unit
I_Q(1)(2)	Total static current of V_{HV} and V_{HREG}	$V_{HV} = V_{HREG} = 6V$		41		uA
		$V_{HV} = V_{HREG} = 11.5V$		52		uA
		$V_{HV} = V_{HREG} = 12.5V$		97		uA
		$V_{HV} = V_{HREG} = 24V$		130		uA

Note: 1. The above are measured parameters.

2. At this time, it is necessary to set the pre-drive signal in CH32M103G8R6 at a low level.

3.3.5 External Clock Source Characteristics

Table 3-10 From external high-speed clock

Symbol	Parameter	Condition	Min.	Typ.	Max.	Unit
F_{HSE_ext}	External clock frequency		3	8	25	MHz
V_{HSEH}(1)	OSC_IN input pin high level voltage		$0.8V_{DD}$		V_{DD}	V
V_{HSEL}(1)	OSC_IN input pin low level voltage		0		$0.2V_{DD}$	V
$C_{in(HSE)}$	OSC_IN input capacitance			5		pF
$DuCy_{HSE}$	Duty Cycle			50		%
I_L	OSC_IN input leakage current				±1	uA

Note 1: Failure to meet this condition may cause a level recognition error.

Figure 3-3 Low frequency clock circuit for external clock source

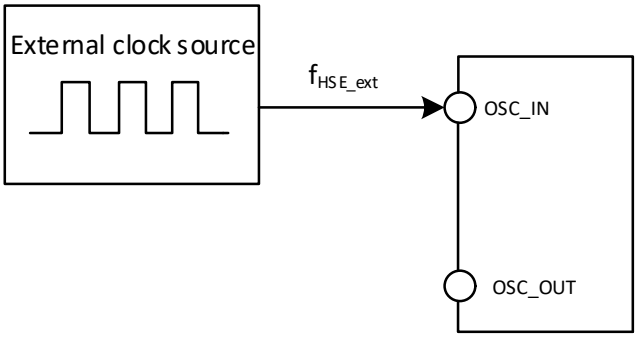

Table 3-11 From external low-speed clock

Symbol	Parameter	Condition	Min.	Typ.	Max.	Unit
F_{LSE_ext}	User external clock frequency			32.768	1000	KHz
V_{LSEH}	OSC32_IN input pin high level voltage		$0.8V_{DD}$		V_{DD}	V
V_{LSEL}	OSC32_IN input pin low voltage		0		$0.2V_{DD}$	V
$C_{in(LSE)}$	OSC32_IN input capacitance			5		pF
$DuCy_{LSE}$	Duty Cycle			50		%
I_L	OSC32_IN input leakage current				±1	uA

Figure 3-4 Low frequency clock circuit for external clock source

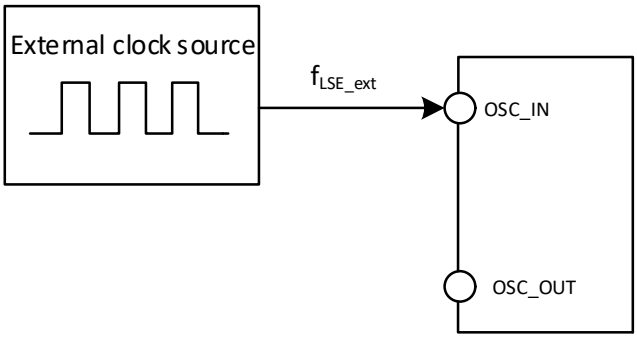

Table 3-12 High-Speed external clocks generated using one crystal/ceramic resonator

Symbol	Parameter	Condition	Min.	Typ.	Max.	Unit
F_{OSC_IN}	Resonator frequency		3	8	25	MHz
R_F	Feedback resistance			250		kΩ
C	Suggested load capacitance with corresponding crystal serial impedance R_S	R_S=60Ω(1)		20		pF
I_2	HSE drive current	V_{DD} = 3.3V，20p load		1		mA
		Low-power, V_{DD} = 3.3V, 20p load		0.55		mA
g_m	Oscillator transconductance	Startup		21		mA/V
$t_{SU(HSE)}$	Startup time(2)	V_{DD} stabilization, 8M		1.5(2)		ms

		crystal				

Note: 1. It is suggested that the ESR of the crystal should not exceed 80Ω, and the crystal with smaller ESR is preferred. Refer to the requirements of the crystal manual for load capacitance.

2. Start-up time refers to the time difference from when HSEON is turned on to when HSERDY is set.

Circuit reference design and requirements:

The load capacitance of the crystal is based on the crystal manufacturer's recommendation, usually C_{L1}=C_{L2}.

Figure 3-5 Typical circuit for external 8M crystal

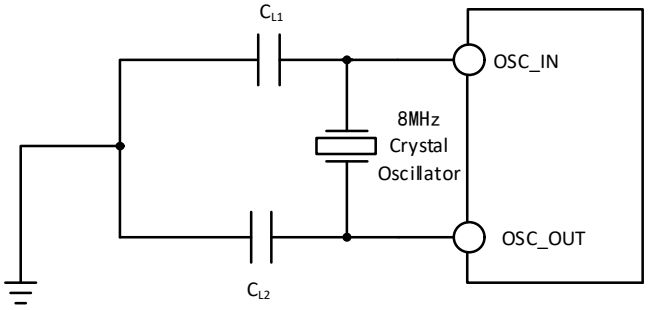

Table 3-13 Low-speed external clocks generated using a crystal/ceramic resonator (f_{LSE}=32.768KHz)

Symbol	Parameter	Condition	Min.	Typ.	Max.	Unit
R_F	Feedback resistance			5		MΩ
C_{L1}/C_{L2}	Suggested load capacitance with corresponding crystal serial impedance R_S	R_S = 70KΩ			15	pF
i_2(1)	LSE drive current	V_{DD} = 3.3V		0.36		uA
g_m(1)	Oscillator transconductance	Startup		26		uA/V
$t_{SU(LSE)}$	Startup time	V_{DD} stabilization		1000(1)		ms

Note: The startup time is the time difference between when LSEON is turned on and when LSERDY is set.

Circuit reference design and requirements:

The load capacitance of the crystal is based on the crystal manufacturer's recommendation, usually C_{L1}=C_{L2}, optional about 12pF.

Figure 3-6 Typical Circuit for External 32.768K Crystal

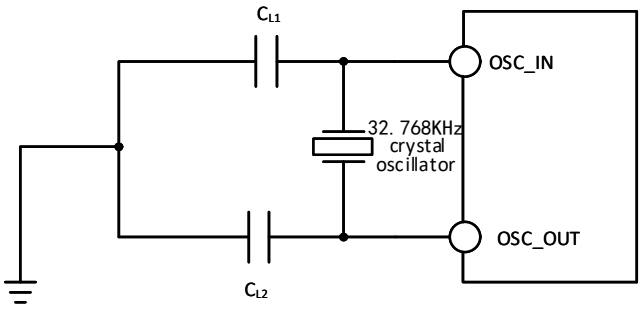

Note: The load capacitance C_L is calculated by the following formula: $C_L = C_{L1} \times C_{L2} / (C_{L1} + C_{L2}) + C_{stray}$, where C_{stray} is the capacitance of the pins and the capacitance associated with the PCB board or PCB, and its typical value is between 2pF and 7pF.

3.3.6 Internal Clock Source Characteristics

Table 3-14 Internal High-Speed (HSI) RC Oscillator Characteristics

Symbol	Parameter	Condition	Min.	Typ.	Max.	Unit
F_{HSI}	Frequency (after calibration)			8		MHz
		Low-power mode		1		MHz
$DuCy_{HSI}$	Duty Cycle		45	50	55	%
ACC_{HSI}	Accuracy of HSI oscillator (after calibration)	T_A = 0°C~70°C	-1.6		1.6	%
		T_A = Ambient temperature range as shown in Table 3-2-1	-2.2		2.2	%
$t_{SU(HSI)}$	HSI oscillator startup stabilization time				8	us
$I_{DD(HSI)}$	HSI oscillator power consumption			200		uA
		Low-power mode		24		uA

Table 3-15 Internal Low-Speed (LSI) RC Oscillator Characteristics

Symbol	Parameter	Condition	Min.	Typ.	Max.	Unit
F_{LSI}	Frequency		27	37	47	KHz
$DuCy_{LSI}$	Duty Cycle		45	50	55	%
$t_{SU(LSI)}$	LSI oscillator startup stabilization time			400		us
$I_{DD(LSI)}$	LSI oscillator power consumption			150		nA

3.3.7 PLL Characteristics

Table 3-16 PLL Characteristics

Symbol	Parameter	Condition	Min.	Typ.	Max.	Unit
F_{PLL_IN}	PLL input clock		3	8	25	MHz
	PLL input clock duty cycle		40		60	%
F_{PLL_OUT}	PLL multiplier output clock		18		96(1)	MHz
t_{LOCK}	PLL lock time			80	200	us
$I_{DD(PLL)}$	PLL power consumption	Input frequency 8M, Output frequency 96M		0.15		mA

Note 1: The appropriate multiplier frequency must be selected to meet the PLL output frequency range.

3.3.8 Wakeup Time from Low-power Mode

Table 3-17 Wakeup time from low-power mode(1)

Symbol	Parameter	Condition	Typ.	Unit
$t_{wusleep}$	Wakeup from Sleep mode	Wake up using HSI RC clock	0.2	us
t_{wustop}	Wakeup from Stop mode	Wake up using HSI RC clock	7	us
$t_{WUSTDBY}$	Wakeup from Standby mode	Wake up using HSI RC clock	72	us

Note: The above are measured parameters.

3.3.9 Memory Characteristics

Table 3-18 Flash memory characteristics

Symbol	Parameter	Condition	Min.	Typ.	Max.	Unit
t_{prog_page}	Page (256 bytes) programming time			2.0	2.5	ms
t_{erase_page}	Page (256 bytes) erase time			6.2	7.5	ms
t_{erase_sec}	Sector (2K bytes) erase time			6.2	7.5	ms

Table 3-19 Flash memory endurance and data retention

Symbol	Parameter	Condition	Min.	Typ.	Max.	Unit
N_{END}	Endurance	T_A = 25℃	300K			Times
		T_A = 70℃	100K			Times
t_{RET}	Data retention period	T_A = 25℃	20			Years
		T_A = 70℃	10			Years

3.3.10 I/O Port Characteristics

Table 3-20 General-purpose I/O static characteristics

Symbol	Parameter	Condition	Min.	Typ.	Max.	Unit
V_{IH}	Standard I/O pin, input high-level voltage		0.41*(V_{DD}-1.8)+1.3		V_{DD}+0.3	V
	FT I/O pin, input high-level voltage		0.42*(V_{DD}-1.8)+1.2		5.0	V
	BOOT0 pin, input high-level voltage		0.85*V_{DD}		V_{DD}+0.3	V
V_{IL}	Standard I/O pin, input low-level voltage		-0.3		0.28*(V_{DD}-1.8)+0.6	V
	FT I/O pin, input low-level voltage		-0.3		0.32*(V_{DD}-1.8)+0.55	V
V_{hys}	Standard I/O pin Schmitt trigger voltage hysteresis		150			mV
	FT I/O Schmitt trigger voltage hysteresis		90			mV
I_{lkg}	Standard I/O pin input leakage current				1	uA
	FT I/O pin input leakage current				3	uA
R_{PU}	Pull-up equivalent group		30	40	50	kΩ
R_{PD}	Pull-down equivalent group		30	40	50	kΩ
C_{IO}	I/O pin capacitor			5		pF

Note: The above are guaranteed design parameters.

Output Drive Current Characteristics

The GPIOs (General-purpose Input/Output Ports) can absorb or output up to ±8mA of current and absorb or output ±20mA of current (not strictly up to V_{OL}/V_{OH}). In user applications, the total current driven by all IO pins must not exceed the absolute maximum ratings given in section 3.2:

Table 3-21 Output voltage characteristics

Symbol	Parameter	Condition	Min.	Max.	Unit
V_{OL}	Output low, 8 pins absorb current	TTL port, I_{IO} = +8mA 2.7V< V_{DD} <3.6V		0.4	V
V_{OH}	Output high, 8 pins absorb current		V_{DD}-0.4		
V_{OL}	Output low, 8 pins absorb current	CMOS port, I_{IO} = +8mA 2.7V< V_{DD} <3.6V		0.4	V
V_{OH}	Output high, 8 pins absorb current		V_{DD}-0.4		
V_{OL}	Output low, 8 pins absorb current	I_{IO} = +20mA 2.7V< V_{DD} <3.6V		0.8	V
V_{OH}	Output high, 8 pins absorb current		V_{DD}-1.2		
V_{OL}	Output low, 8 pins absorb current	I_{IO} = +6mA 2.4V< V_{DD} <2.7V		0.8	V
V_{OH}	Output high, 8 pins absorb current		V_{DD}-1.2		

Note: If more than one IO pin is driven at the same time in the above conditions, the sum of the currents must not exceed the absolute maximum ratings given in section 3.2. Also when multiple IO pins are driven at the same time, the high current at the power/ground point can cause a voltage drop that prevents the voltage of the internal IOs from reaching the supply voltage in the table, which results in a drive current that is less than the nominal value.

Table 3-22 Output AC Characteristics

MODEx[1:0] configuration	Symbol	Parameter	Condition	Min.	Max.	Unit
10 (2MHz)	$F_{max(IO)out}$	Maximum Frequency	CL=50pF, V_{DD}=2.7-3.6V		2	MHz
	$t_{f(IO)out}$	Output high-to-low level fall time	CL=50pF, V_{DD}=2.7-3.6V		125	ns
	$t_{r(IO)out}$	Output low-to-high rise time			125	ns
01 (10MHz)	$F_{max(IO)out}$	Maximum Frequency	CL=50pF, V_{DD}=2.7-3.6V		10	MHz
	$t_{f(IO)out}$	Output high-to-low level fall time	CL=50pF, V_{DD}=2.7-3.6V		25	ns
	$t_{r(IO)out}$	Output low-to-high rise time			25	ns
11 (50MHz)	$F_{max(IO)out}$	Maximum Frequency	CL=30pF, V_{DD}=2.7-3.6V		50	MHz
			CL=50pF, V_{DD}=2.7-3.6V		30	MHz
	$t_{f(IO)out}$	Output low-to-high rise time Maximum Frequency	CL=30pF, V_{DD}=2.7-3.6V		5	ns
			CL=50pF, V_{DD}=2.7-3.6V		8	ns
	$t_{r(IO)out}$	Output high-to-low level fall time	CL=30pF, V_{DD}=2.7-3.6V		5	ns
			CL=50pF, V_{DD}=2.7-3.6V		8	ns
	t_{EXTIpw}	EXTI controller detects the pulse width of the external signal		10		ns

3.3.11 NRST Pin Characteristics

Table 3-23 External reset pin characteristics

Symbol	Parameter	Condition	Min.	Typ.	Max.	Unit
$V_{IL(NRST)}$	NRST input low level voltage		-0.3		0.28*(V_{DD}-1.8)+0.6	V
$V_{IH(NRST)}$	NRST input high level voltage		0.41*(V_{DD}-1.8)+1.3		V_{DD}+0.3	V
$V_{hys(NRST)}$	NRST Schmitt trigger voltage hysteresis		150			mV
R_{PU}(1)	Pull-up equivalent resistance		30	40	50	kΩ
$V_{F(NRST)}$	NRST input can be filtered for pulse width				100	ns
$V_{NF(NRST)}$	NRST input cannot be filtered pulse width		300			ns

Note: 1. The pull-up resistor is a real resistor in series with a switchable PMOS implementation. The resistance of this PMOS/NMOS switch is very small (about 10%).

Circuit reference design and requirements:

Figure 3-7 Typical circuit of external reset pin

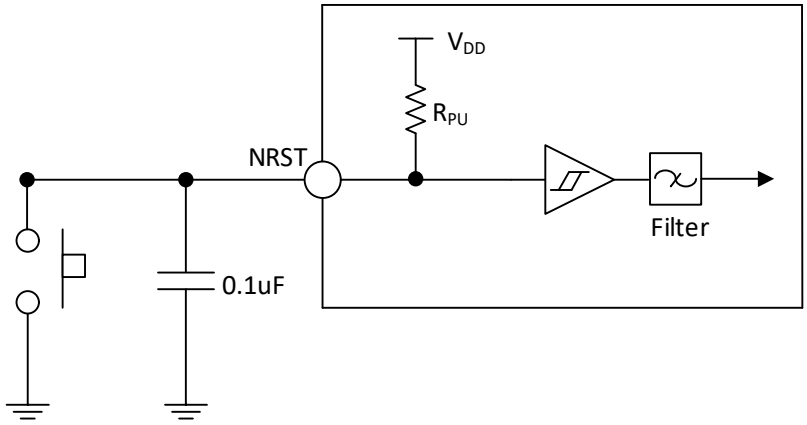

Note: The capacitors shown are optional and can be used to filter out key jitter.

3.3.12 USB PD Interface Characteristics

Table 3-24-1 PD interface I/O characteristics

Symbol	Parameter	Condition	Min.	Typ.	Max.	Unit
tRise	Rising time	The time between 10% and 90% of the range, with the minimum value being the time under no-load conditions.	240	400		ns
tFall	Falling time	The time between 10% and 90% of the range, with the minimum value being the time under no-load conditions.	240	400		ns
V_{Swing}	Output voltage swing		1.04	1.12	1.20	V

	(Peak-to-peak)					
Z_{Driver}	Output impedance		26		90	Ω

Table 3-24-2 Type-C I/O characteristics

Symbol	Parameter	Condition	Min.	Typ.	Max.	Unit
I_{pu}	Pull-up current	PAD < V_{DD}-0.6V		80		uA
				180		uA
				330		uA
Rd	Pull-down current	V_{DD} ≥ 1.6V or external pull-up 330uA	4.08	5.1	6.12	kΩ

3.3.13 TIM Timer Characteristics

Table 3-25 TIMx characteristics

Symbol	Parameter	Condition	Min.	Max.	Unit
$t_{res(TIM)}$	Timer reference clock		1		$t_{TIMxCLK}$
		$f_{TIMxCLK}$ = 48MHz	20.8		ns
F_{EXT}	Timer external clock frequency on CH1 to CH4		0	$f_{TIMxCLK}$/2	MHz
		$f_{TIMxCLK}$ = 48MHz	0	24	MHz
R_{esTIM}	Timer resolution			16	Bit
$t_{COUNTER}$	16-bit counter clock cycle when the internal clock is selected		1	65536	$t_{TIMxCLK}$
		$f_{TIMxCLK}$ = 48MHz	0.02	1363	us
t_{MAX_COUNT}	Maximum possible count			65535	$t_{TIMxCLK}$
		$f_{TIMxCLK}$ = 48MHz		1363	us

3.3.14 I2C Interface Characteristics

Figure 3-8 I2C bus timing diagram

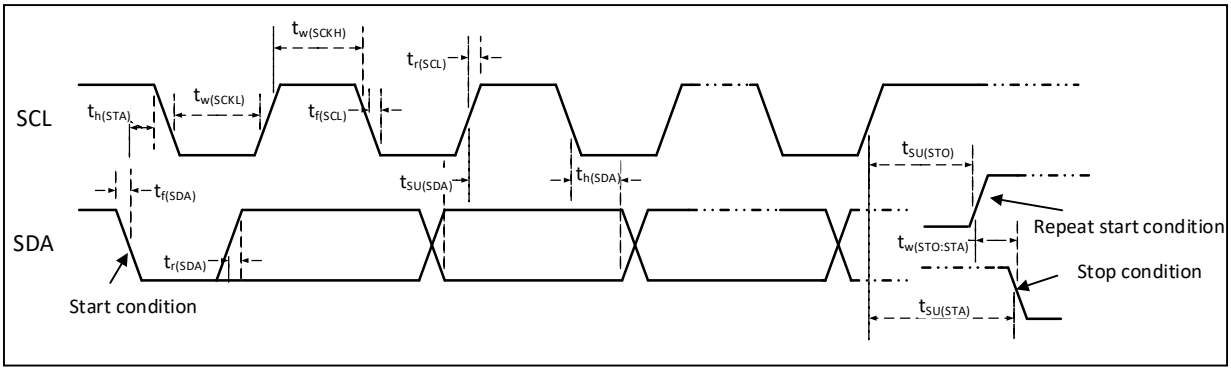

Table 3-26 I2C interface characteristics

Symbol	Parameter	Standard I2C		Fast I2C		Unit
		Min.	Max.	Min.	Max.	
$t_{w(SCKL)}$	SCL clock low level time	4.7		1.2		us
$t_{w(SCKH)}$	SCL clock high level time	4.0		0.6		us
$t_{SU(SDA)}$	SDA data setup time	250		100		ns
$t_{h(SDA)}$	SDA data hold time	0		0	900	ns
$t_{r(SDA)}/t_{r(SCL)}$	SDA and SCL rise time		1000	20		ns
$t_{f(SDA)}/t_{f(SCL)}$	SDA and SCL fall time		300			ns
$t_{h(STA)}$	Start condition hold time	4.0		0.6		us
$t_{SU(STA)}$	Repeated start condition setup time	4.7		0.6		us
$t_{SU(STO)}$	Stop condition setup time	4.0		0.6		us
$t_{w(STO:STA)}$	Time from stop condition to start condition (bus free)	4.7		1.2		us
C_b	Capacitive load for each bus		400		400	pF

3.3.15 SPI Interface Characteristics

Figure 3-9 SPI timing diagram in Master mode

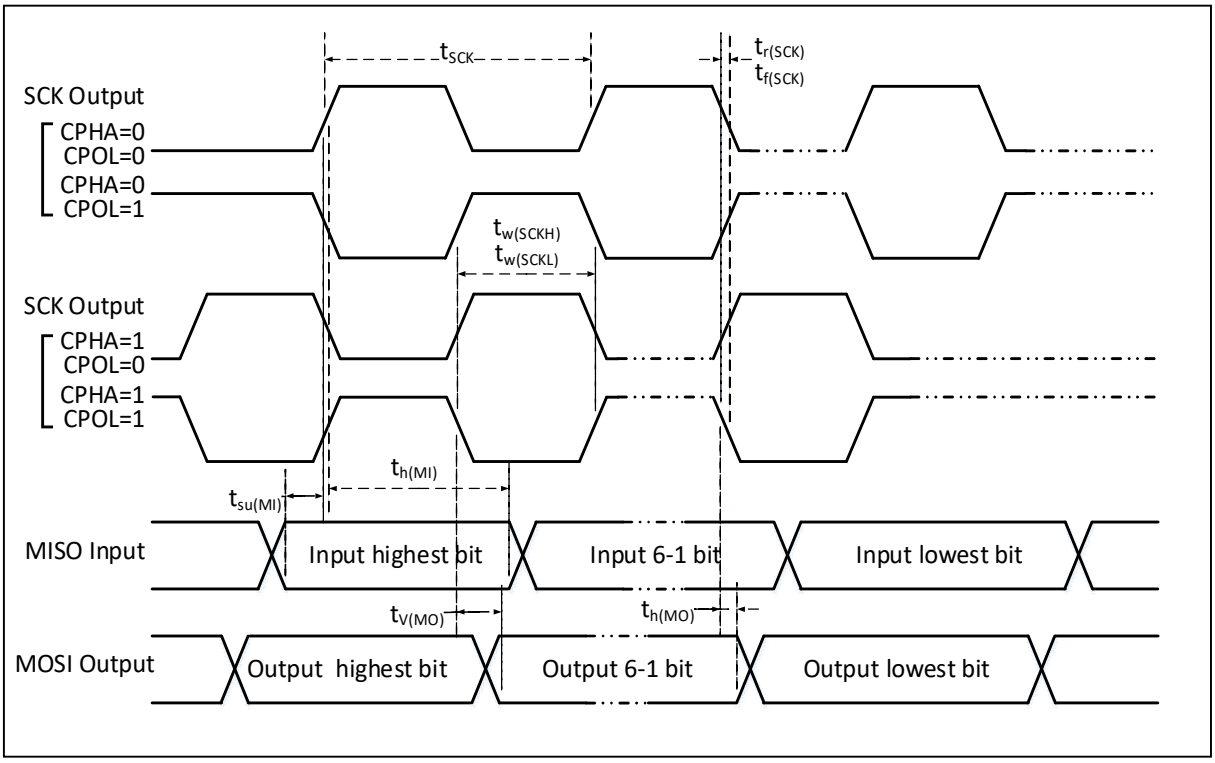

Figure 3-10-1 SPI timing diagram in Slave mode (CPHA=0, CPOL=0)

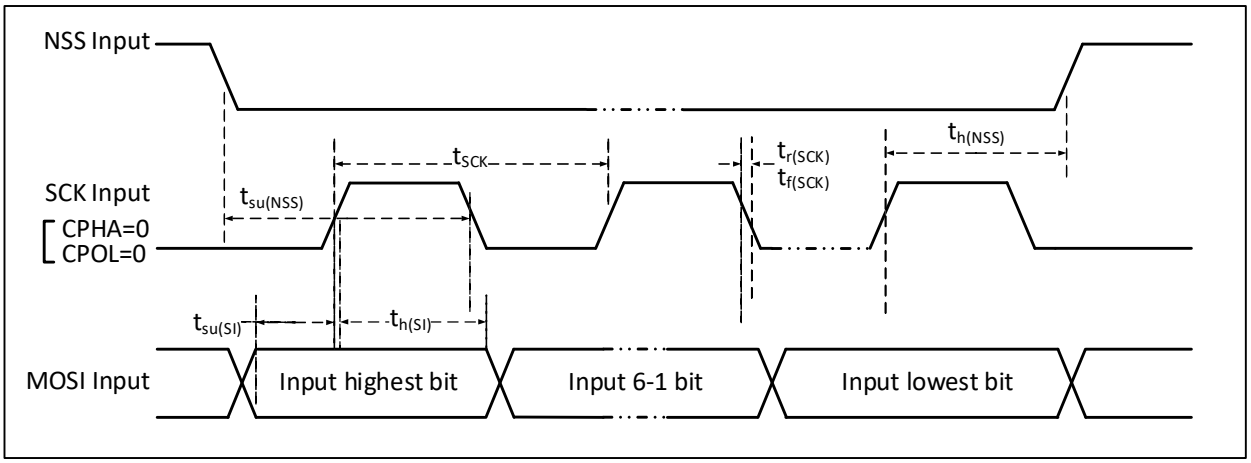

Figure 3-10-2 SPI timing diagram in Slave mode (CPHA=0, CPOL=1)

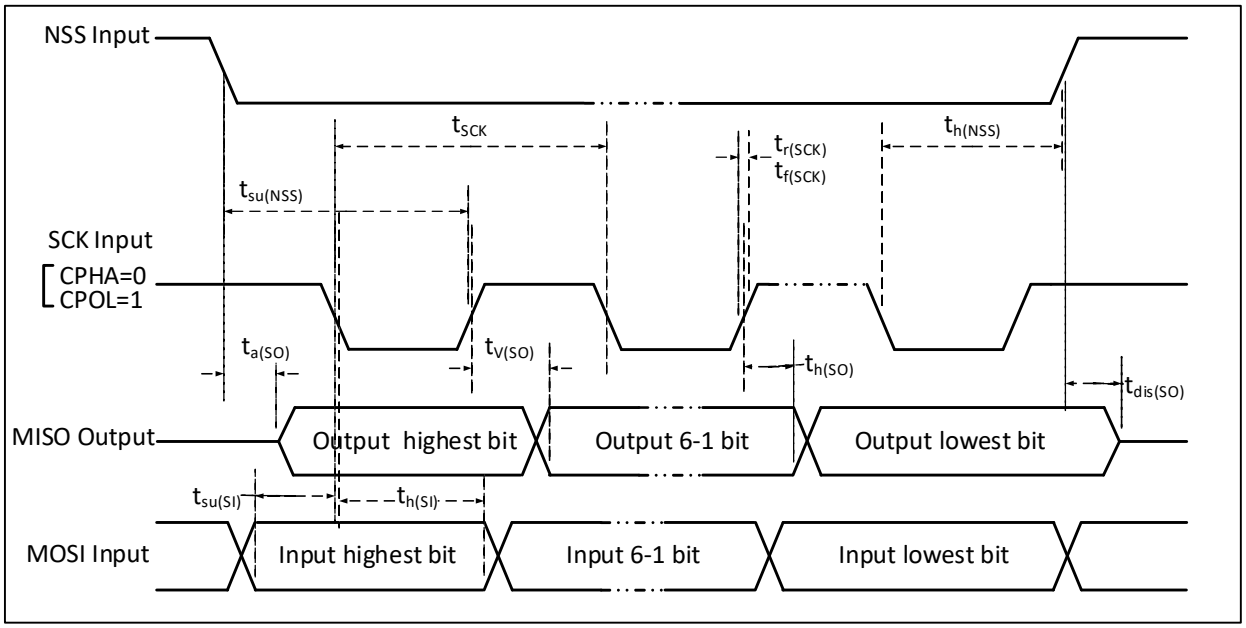

Figure 3-11-1 SPI timing diagram in Slave mode (CPHA=1, CPOL=0)

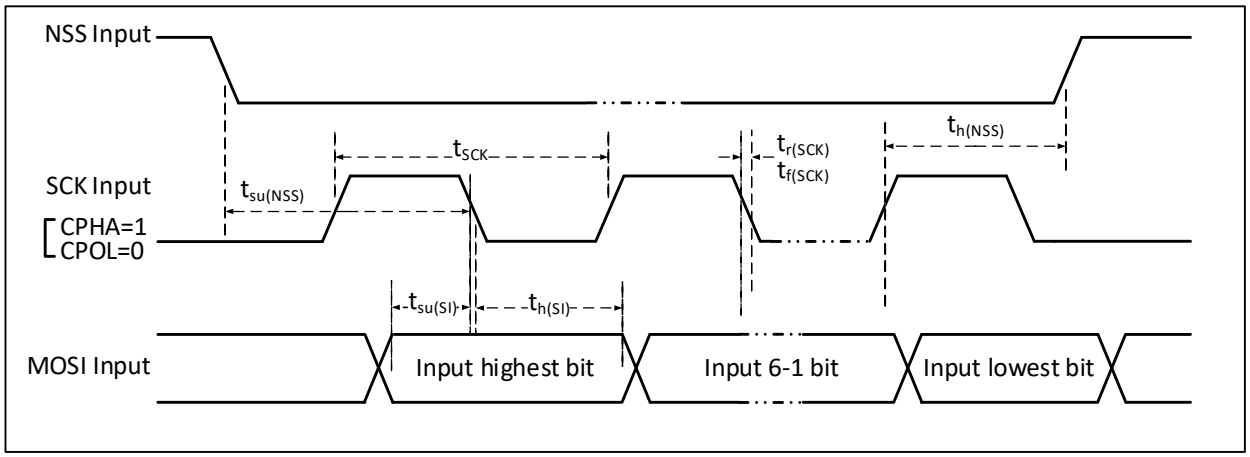

Figure 3-11-2 SPI timing diagram in Slave mode (CPHA=1, CPOL=1)

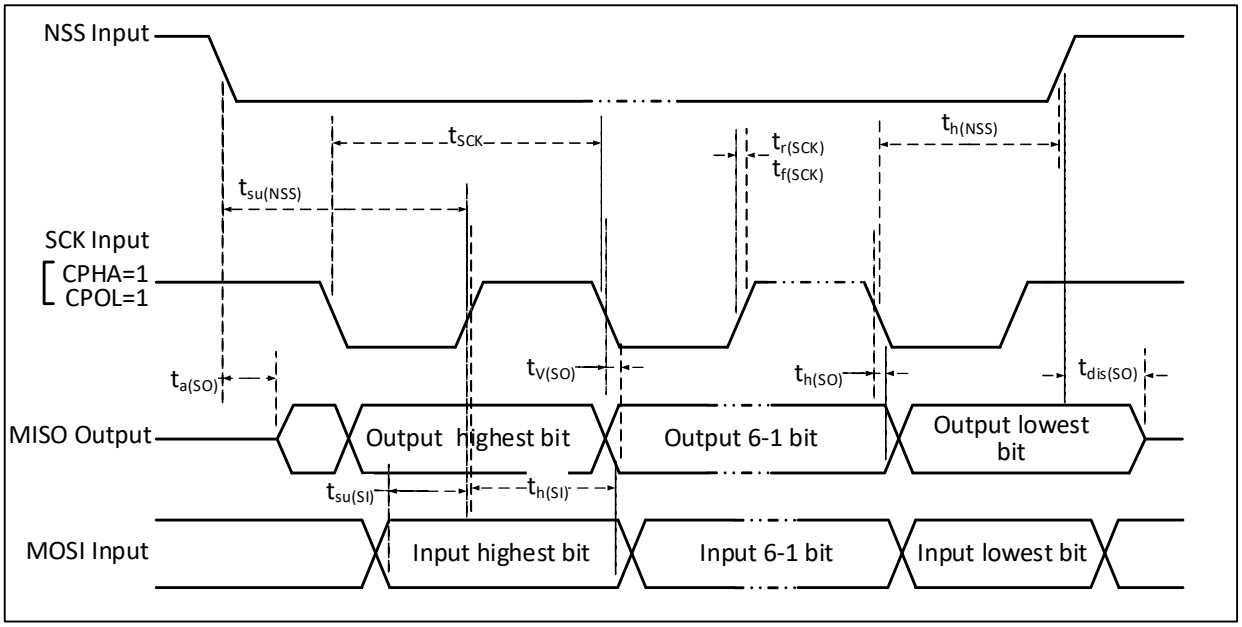

Table 3-27 SPI interface characteristics

Symbol	Parameter	Condition		Min.	Max.	Unit
f_{SCK}/t_{SCK}	SPI clock frequency	Master mode			32	MHz
		Slave mode			32	MHz
$t_{r(SCK)}/t_{f(SCK)}$	SPI clock rise and fall time	Load capacitance: C = 30pF			8	ns
$t_{SU(NSS)}$	NSS setup time	Slave mode		$2t_{HCLK}$		ns
$t_{h(NSS)}$	NSS hold time	Slave mode		$2t_{HCLK}$		ns
$t_{w(SCKH)}/t_{w(SCKL)}$	SCK high-level and low-level time	Master mode, f_{PCLK} = 24MHz, Prescaler factor = 4		70	97	ns
$t_{SU(MI)}$	Data input setup time	Master mode	HSRXEN = 0	15		ns
		Master mode	HSRXEN = 1	$15-0.5t_{SCK}$		
$t_{SU(SI)}$		Slave mode		4		ns
$t_{h(MI)}$	Data input hold time	Master mode	HSRXEN = 0	-4		ns
		Master mode	HSRXEN = 1	$0.5t_{SCK}-4$		
$t_{h(SI)}$		Slave mode		4		ns
$t_{a(SO)}$	Data output access time	Slave mode, f_{PCLK} = 20MHz		0	$1t_{HCLK}$	ns
$t_{dis(SO)}$	Data output disable time	Slave mode		0	10	ns
$t_{V(SO)}$	Data output valid time	Slave mode (After enabling edge)			15	ns
$t_{V(MO)}$		Master mode (After enabling edge)			5	ns
$t_{h(SO)}$	Data output hold time	Slave mode (After enabling edge)		8		ns
$t_{h(MO)}$		Master mode (After enabling edge)		0		ns

3.3.16 USB Interface Characteristics

Table 3-28 USB interface I/O characteristics

Symbol	Parameter	Condition	Min.	Typ.	Max.	Unit

V_{DD}	USB operating voltage	Selection of USB parameters according to V_{DD} voltage	3.0		3.6	V
V_{SE}	Single-ended receiver threshold	Rated voltage	1.2		1.9	V
V_{OL}	Static output low level				0.3	V
V_{OH}	Static output high level		2.8			V
V_{BC_REF}	BC comparator reference voltage			0.4		V
V_{BC_SRC}	BC protocol output voltage			0.6		V

3.3.17 12-bit ADC Characteristics

Table 3-29 ADC characteristics

Symbol	Parameter	Condition	Min.	Typ.	Max.	Unit
V_{DDA}	Supply voltage	f_S < 200KHz	1.8		3.6	V
		f_S = 2.4MHz	3		3.6	V
I_{DDA}	Supply current	f_S = 2.4MHz Buffer off		1.2		mA
		f_S = 2.4MHz Buffer on		1.96		mA
		f_S = 1MHz Buffer off		0.45		mA
		f_S = 1MHz Buffer on		1.21		mA
f_{ADC}	ADC clock frequency			14	48	MHz
f_S	Sampling rate		0.05		2.4	MHz
f_{TRIG}	External trigger frequency	f_{ADC} = 14MHz			875	KHz
					16	$1/f_{ADC}$
		f_{ADC} = 48MHz			2.2	MHz
					22	$1/f_{ADC}$
V_{AIN}	Conversion voltage range		0		V_{DDA}	V
R_{AIN}	External input impedance				50	kΩ
R_{ADC}	Sampling switch resistance			0.6	1.5	kΩ
C_{ADC}	Internal sample and hold capacitor			4		pF
t_{CAL}	Calibration time	f_{ADC} = 14MHz			7.14	us
					100	$1/f_{ADC}$
t_{lat}	Injected trigger conversion latency	f_{ADC} = 14MHz			0.143	us
		f_{ADC} = 48MHz			0.042	us
					2	$1/f_{ADC}$
t_{latr}	Regular trigger conversion latency	f_{ADC} = 14MHz			0.143	us
		f_{ADC} = 48MHz			0.042	us
					2	$1/f_{ADC}$
t_s	Sampling time	f_{ADC} = 14MHz	0.107		17.1	us
			1.5		239.5	$1/f_{ADC}$
		f_{ADC} = 48MHz		0.156		us
				7.5		$1/f_{ADC}$
t_{STAB}	Power-on time				1	us
t_{CONV}	Total conversion time	f_{ADC} = 14MHz	1		18	us

	(including sampling time)		14		252	$1/f_{ADC}$
		f_{ADC} = 48MHz		0.417		us
				20		$1/f_{ADC}$

Note: The above are guaranteed design parameters.

Formula: Maximum R_{AIN}

$$R_{AIN} < \frac{T_S}{f_{ADC} \times C_{ADC} \times \ln 2^{N+2}} - R_{ADC}$$

The above formula is used to determine the maximum external impedance such that the error can be less than 1/4 LSB. where N=12 (indicating 12-bit resolution).

Table 3-30 Maximum R_{AIN} at f_{ADC} = 14MHz

T_S (cycle)	t_S (us)	Maximum R_{AIN}(kΩ)
1.5	0.11	1.2
7.5	0.54	12.3
13.5	0.96	23.3
28.5	2.04	50
41.5	2.96	75
55.5	3.96	No limit
71.5	5.11	No limit
239.5	17.1	No limit

Table 3-31 ADC error

Symbol	Parameter	Condition	Min.	Typ.	Max.	Unit
ET	Total error	f_{ADC} = 14MHz,		±3	±8	LSB
ED	Differential nonlinear error	R_{AIN} < 10kΩ,		±2	±5	
EL	Integral nonlinear error	V_{DD} = 3.3V, 15mV < V_{AIN} < (V_{DD}-15mV) Measurements are calibrated.		±3	±5	

Note: The above are guaranteed design parameters.

Figure 3-12 ADC typical connection diagram

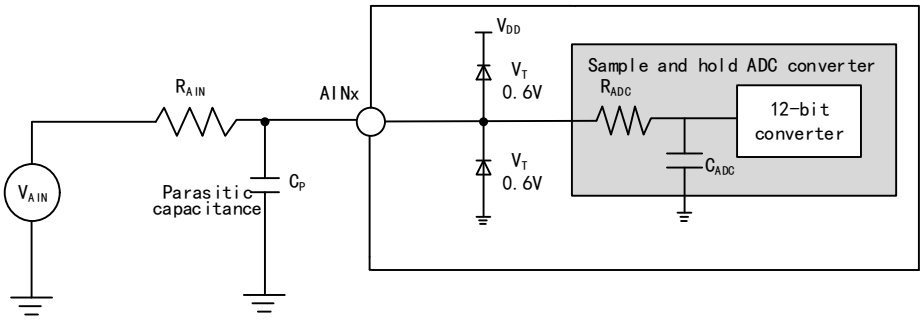

Cp indicates the parasitic capacitance on the PCB and pads (About 5pF), which may be related to the quality of

the pads and PCB layout. Larger values of Cp will reduce the conversion accuracy and the solution is to reduce the f_{ADC} value.

Figure 3-13 Analog power supply and decoupling circuit reference

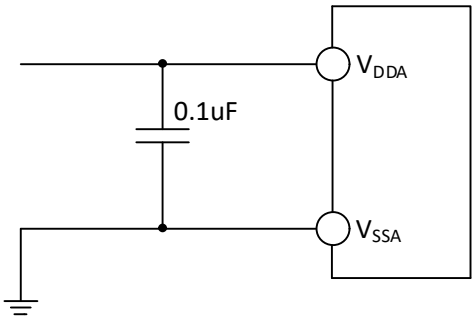

3.3.18 TS Characteristics

Table 3-32 TS characteristics

Symbol	Parameter	Condition	Min.	Typ.	Max.	Unit
R_{TS}	Temperature sensor measurement range		-40		85	℃
A_{TSC}	Measurement error of temperature sensors			±12		℃
Avg_Slope	Average slope (negative temperature coefficient)		3.7	4.2	4.7	mV/℃
V_{25}	Voltage at 25℃		1.4	1.45	1.5	V
T_{S_temp}	ADC sampling time when reading temperature	f_{ADC} = 14MHz			20	us

3.3.19 OPA Characteristics

Table 3-33-1 OPA characteristics

Symbol	Parameter	Condition	Min.	Typ.	Max.	Unit
V_{DDA}	Supply voltage	Recommended not less than 2.4V	1.8	3.3	3.6	V
V_{CM}	Common mode input voltage		0		V_{DDA}	V
$V_{IOFFSET0}$	Input offset voltage	Before calibration		±2	±8	mV
$V_{IOFFSET}$	Input offset voltage	After calibration		±0.2	±0.8	mV
I_{LOAD}	Drive current	R_{LOAD} = 4kΩ			900	uA
I_{LOAD_PGA}	PGA mode drive current				500	uA
$I_{DDOPAMP}$	Current consumption	No load, static mode		220		uA
C_{MRR}(1)	Common mode rejection ratio	@1kHz		96		dB
P_{SRR}(1)	Power supply rejection ratio	@1kHz		82		dB
Av(1)	Open loop gain	C_{LOAD} = 5pF		115		dB

G_{BW}(1)	Unit gain bandwidth	C_{LOAD} = 5pF		9		MHz
P_M(1)	Phase margin	C_{LOAD} = 5pF		75		
S_R(1)	Slew rate limited	C_{LOAD} = 5pF		5		V/us
t_{WAKUP}(1)	Setup time from shutdown to wake up, 0.1%	Input V_{DDA}/2, C_{LOAD} = 50pF, R_{LOAD} = 4kΩ			0.8	us
R_{LOAD}	Resistive load		4			kΩ
C_{LOAD}	Capacitive load				40	pF
V_{OHSAT}(2)	High saturation output voltage	R_{LOAD} = 4kΩ	V_{DDA}-250	V_{DDA}-150		mV
		R_{LOAD} = 20kΩ	V_{DDA}-50	V_{DDA}-30		
V_{OLSAT}(2)	Low saturation output voltage	R_{LOAD} = 4kΩ		3	10	mV
		R_{LOAD} = 20kΩ		3	10	
PGA Gain(1)	NSEL=010b mode in phase	Gain = 32, PB10 = V_{SS}	-3		3	%
	Internal in-phase PGA	Gain = 8, V_{INP} <(V_{DDA}/7)	-1		1	%
		Gain = 16, V_{INP} <(V_{DDA}/15)	-1		1	%
		Gain = 32, V_{INP} <(V_{DDA}/31)	-1		1	%
		Gain = 64, V_{INP} <(V_{DDA}/63)	-1		1	%
Delta R	Absolute change in resistance		-15		15	%
eN(1)	Equivalent input voltage noise	R_{LOAD} = 4kΩ@1kHz		100		nV/ sqrt(Hz)
		R_{LOAD} = 20kΩ@1KHz		60		

Note: 1. Design parameters are guaranteed;

2. Load current will limit saturated output voltage.

Table 3-33-2 OPA characteristics (low-power mode)

Symbol	Parameter	Condition	Min.	Typ.	Max.	Unit
V_{DDA}	Supply voltage	Recommended not less than 2.4V	1.8	3.3	3.6	V
V_{CM}	Common mode input voltage		0		V_{DDA}	V
$V_{IOFFSET}$	Input offset voltage			±2	±12	mV
I_{LOAD}	Drive current	R_{LOAD} = 10kΩ			360	uA
I_{LOAD_PGA}	PGA mode drive current				500	uA
$I_{DDOPAMP}$	Current consumption	No load, static mode		40		uA
C_{MRR}(1)	Common mode rejection ratio	@1kHz		90		dB

P_{SRR}(1)	Power supply rejection ratio	@1kHz		78		dB
Av(1)	Open loop gain	C_{LOAD} = 5pF		115		dB
G_{BW}(1)	Unit gain bandwidth	C_{LOAD} = 5pF		4		MHz
P_M(1)	Phase margin	C_{LOAD} = 5pF		76		
S_R(1)	Slew rate limited	C_{LOAD} = 5pF		2.2		V/us
t_{WAKUP}(1)	Setup time from shutdown to wake up, 0.1%	Input V_{DDA}/2, C_{LOAD} = 30pF, R_{LOAD} = 4kΩ			1.1	us
R_{LOAD}	Resistive load		10			kΩ
C_{LOAD}	Capacitive load				30	pF
V_{OHSAT}(2)	High saturation output voltage	R_{LOAD} = 10kΩ	V_{DDA}-300	V_{DDA}-180		mV
		R_{LOAD} = 20kΩ	V_{DDA}-60	V_{DDA}-35		
V_{OLSAT}(2)	Low saturation output voltage	R_{LOAD} = 10kΩ		4	15	mV
		R_{LOAD} = 20kΩ		4	15	
PGA Gain(1)	NSEL=010b mode in phase	Gain = 32, PB10 = V_{SS}	-3		3	%
	Internal in-phase PGA	Gain = 8, V_{INP} <(V_{DDA}/7)	-1		1	%
		Gain = 16, V_{INP} <(V_{DDA}/15)	-1		1	%
		Gain = 32, V_{INP} <(V_{DDA}/31)	-1		1	%
		Gain = 64, V_{INP} <(V_{DDA}/63)	-1		1	%
Delta R	Absolute change in resistance		-15		15	%
eN(1)	Equivalent input voltage noise	R_{LOAD} = 10kΩ@1kHz		100		nV/ sqrt(Hz)
		R_{LOAD} = 20kΩ@1KHz		80		

Note: 1. Design parameters are guaranteed;

2. Load current will limit saturated output voltage.

3.3.20 CMP Characteristics

Table 3-34-1 CMP characteristics

Symbol	Parameter	Condition	Min.	Typ.	Max.	Unit
V_{DDA}	Supply voltage		1.8	3.3	3.6	V
V_{CM}	Common mode input voltage		0		V_{DDA}	V
$V_{IOFFSET}$	Input offset voltage			±2.8	±10	mV
$I_{DDOPAMP}$	Current consumption			43		uA
V_{hys}	Hysteresis voltage			±15		mV
t_D(1)	Comparator delay.	0 ≤ V_{INN} ≤ V_{DDA}		16	40	ns

	V_{INP} varies from (V_{INN}-100mV) to (V_{INN}+100mV) change					

Note: 1. Design parameters are guaranteed.

Table 3-34-2 CMP characteristics (low-power mode)

Symbol	Parameter	Condition	Min.	Typ.	Max.	Unit
V_{DDA}	Supply voltage		1.8	3.3	3.6	V
V_{CM}	Common mode input voltage		0		V_{DDA}	V
$V_{IOFFSET}$	Input offset voltage			±4		mV
$I_{DDOPAMP}$	Current consumption			3.5		uA
t_D(1)	Comparator delay. V_{INP} varies from (V_{INN}-100mV) to (V_{INN}+100mV) change	$0 \le V_{INN} \le V_{DDA}$		251	400	ns

Note: 1. Design parameters are guaranteed.

3.3.21 Internal Gate Driver Characteristics (Only for CH32M103G8R6 chip)

Table 3-35 Internal gate driver characteristics

Symbol	Parameter	Condition	Min.	Typ.	Max.	Unit
V_{HVUVR}	Gate driver V_{HV} undervoltage protection turn-on voltage		4.8	5.2	5.7	V
V_{HVUVF}	Gate driver V_{HV} undervoltage protection turn-off voltage		4.4	4.9	5.3	V
V_{HVUVS}	Hysteresis voltage of gate driver V_{HV} undervoltage protection		0.1	0.3	0.6	V
V_{OHL}	LO high level output voltage	I_{SOURCE} = 20mA	9.5	11.5	14	V
V_{OHH}	HO high level output voltage (relative to V_{HV})	I_{SOURCE} = 20mA		-170	-280	mV
V_{OLL}	Lo low level output voltage	I_{SINK} = 20mA		105	180	mV
V_{OLH}	HO low level output voltage (relative to V_{HV})	I_{SINK} = 20mA	-14	-11.5	-9.5	V
I_{OH}	Short-circuit pulse current when LO drives high level (used to turn on N-type power tube)	V_{HV} = 15V	100	140		mA
		V_{HV} = 7V	80	115		
	Short-circuit pulse current when HO drives high level (used to quickly turn off P-type power tube)	V_{HV} = 15V	500	720		mA
		V_{HV} = 7V	160	230		
I_{OL}	Short-circuit pulse current when LO drives low level (used to quickly turn off N-type power tube)	V_{HV} = 15V	420	600		mA
		V_{HV} = 7V	140	200		
	Short-circuit pulse current when HO drives low level (used to turn on P-type power tube)	V_{HV} = 15V	105	150		mA
		V_{HV} = 7V	85	120		

Chapter 4 Package and Ordering Information

Packages

Package Form	Body Size	Pin Pitch		Package Description	Order Model
LQFP48	7*7mm	0.5mm	19.7mil	Low Profile Quad Flat Pack	CH32L103C8T6
QFN32	4*4mm	0.4mm	15.7mil	Quad Flat No-Lead Package	CH32L103K8U6
QFN32	4*4mm	0.4mm	15.7mil	Quad Flat No-Lead Package	CH32L103K8U7
QSOP28	3.9*9.9mm	0.635mm	25.0mil	Quarter-sized Outline Package	CH32L103G8R6
QFN20	3*3mm	0.4mm	15.7mil	Quad Flat No-Lead Package	CH32L103F8U6
TSSOP20	4.4*6.5mm	0.65mm	25.6mil	Thin Shrink Small Outline Package	CH32L103F8P6
QSOP28	3.9*9.9mm	0.635mm	25.0mil	Quarter-sized Outline Package	CH32M103G8R6

Note: All dimensions are in millimeters. The pin center spacing values are nominal values, with no error. Other than that, the dimensional error is not greater than the greater of ±0.2mm or 10%.

4.1 LQFP48 package

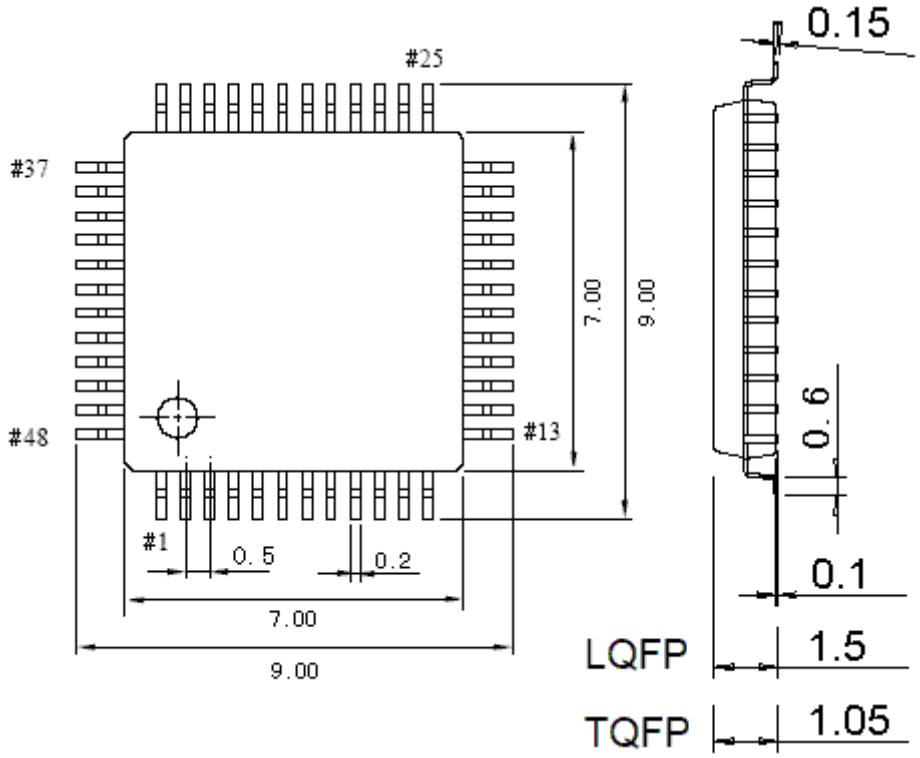

4.2 QFN32 package

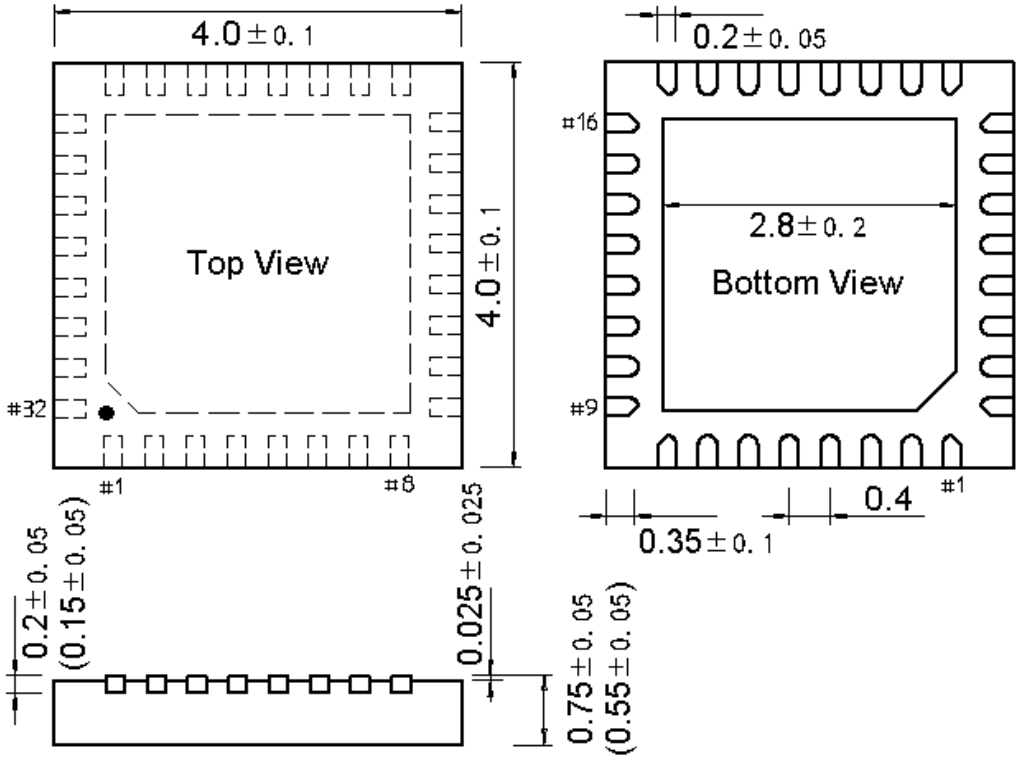

4.3 QSOP28 package

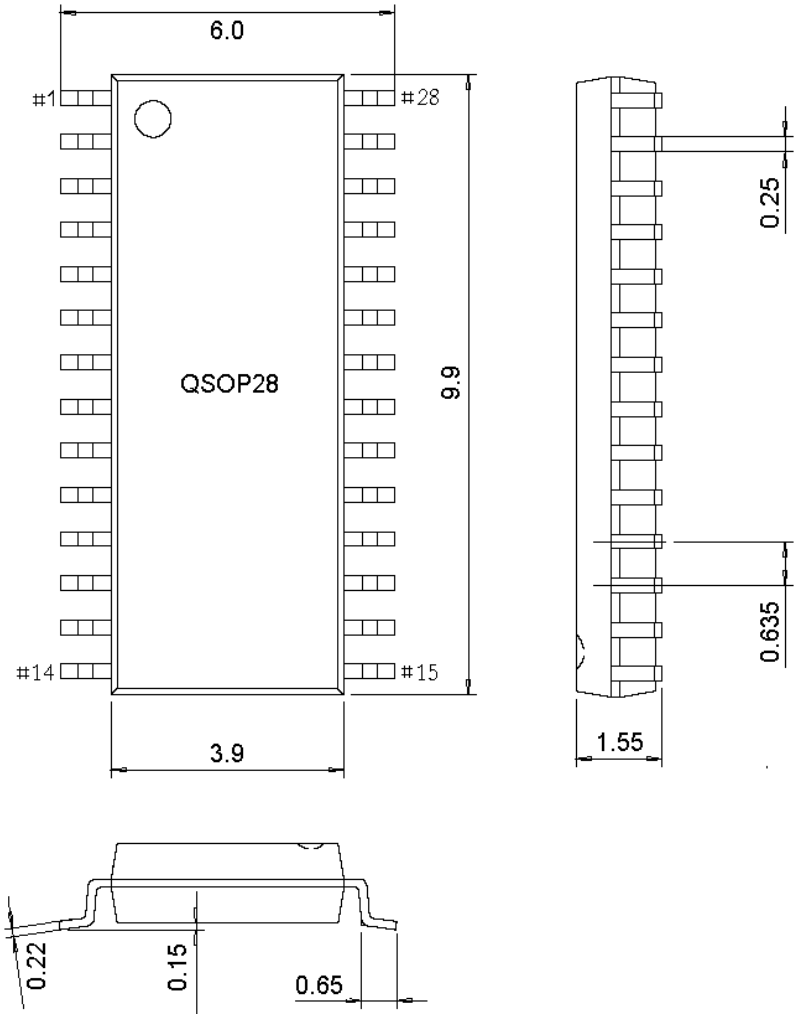

4.4 QFN20 package

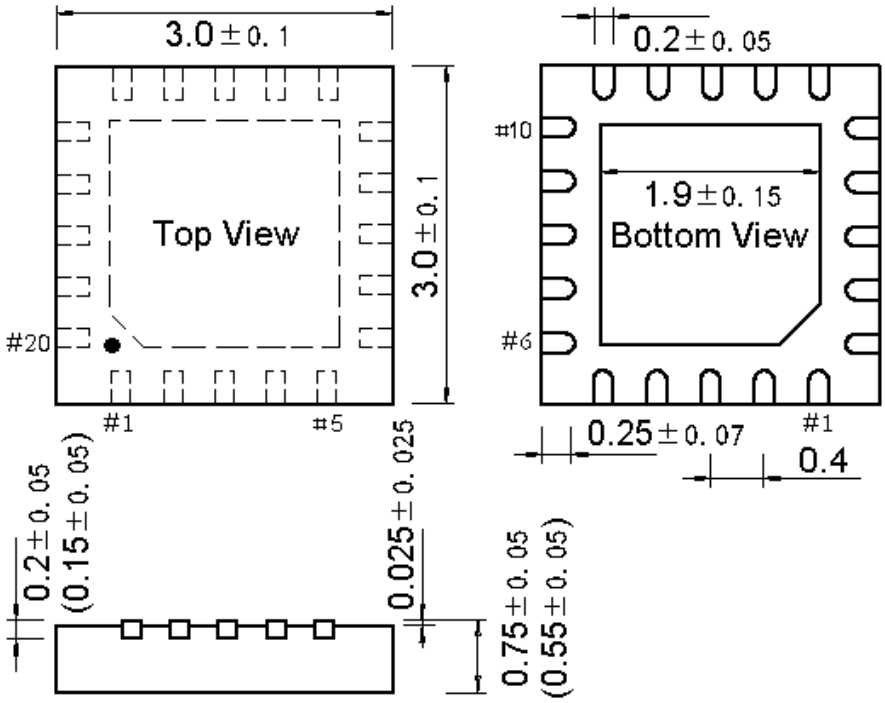

4.5 TSSOP20 package

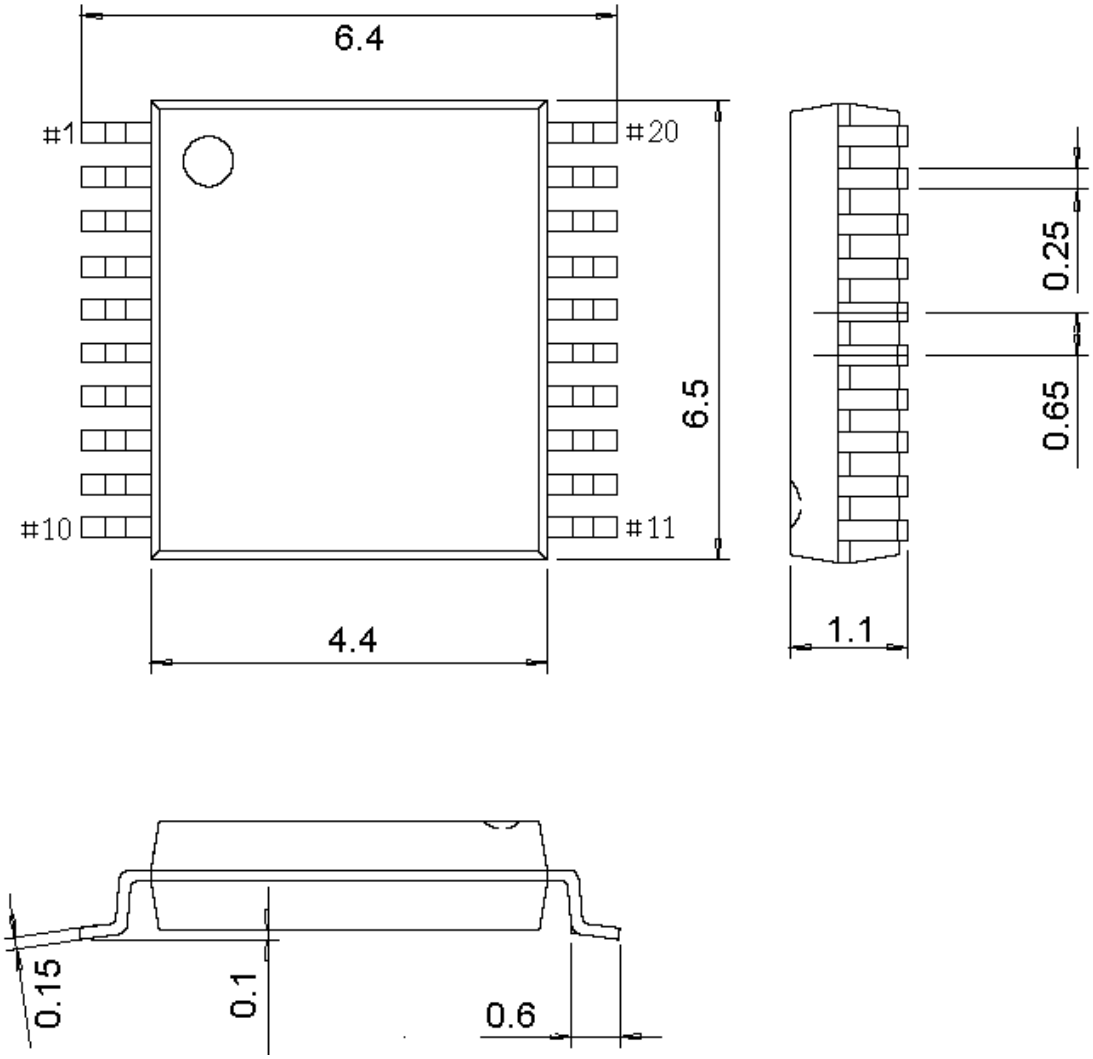

Series Product Naming Rules

Example: CH32 V 303 R 8 T 6

Product Series

F = Arm core, general-purpose MCU
V = QingKe RISC-V core, general-purpose MCU
L = QingKe RISC-V core, low-power MCU
X = QingKe RISC-V core, dedicated or special peripheral MCU
M = QingKe RISC-V core, Built-in gate drive motor MCU
H = QingKe RISC-V core, high-performance MCU

Product type (*)+Product sub-series (**)

Product type	Product sub-series
0 = Value version, main frequency <=48M	02 = 16K Flash value general-purpose type 03 = 16K Flash basic general-purpose type, OPA 06 = 64K Flash multi-function general-purpose type, OPA, dual-purpose, TKey 07 = Basic motor application type, OPA+CMP
1 = Basic version, main frequency <=100M 2 = Enhanced version, main frequency <=200M 3 = Hardware floating point, medium and large capacity <512KB	03 = Connected, USB 05 = Connected, USB HS, CAN 07 = Interconnected, USB HS, CAN, Ethernet, SDIO, FSMC 08 = Wireless, BLE5.x, CAN, USB, Ethernet 17 = Interconnected, USB HS, CAN, Ethernet (Built-in PHY), SDIO
4 = Hardware floating point, large capacity >=512KB	17 = Interconnected, USB SS, SerDes, HSADC, UHSIF, SDIO, DVP, Ethernet (Built-in PHY)

Pin number

J = 8 pin D = 12 pin A = 16 pin F = 20 pin E = 24 pin
G = 28 pin K = 32 pin T = 36 pin C = 48 pin R = 64 pin
W = 68 pin M = 88 pin V = 100 pin Q = 128 pin Z = 144 pin

Flash memory capacity

4 = 16K Flash memory 6 = 32K Flash memory 7 = 48K Flash memory 8 = 64K Flash memory
B = 128K Flash memory C = 256K Flash memory E = 512K Flash memory

Package

T = LQFP U = QFN R = QSOP P = TSSOP M = SOP

Temperature range	
6 = -40℃~85℃	7 = -40℃~105℃
3 = -40℃~125℃	D = -40℃~150℃