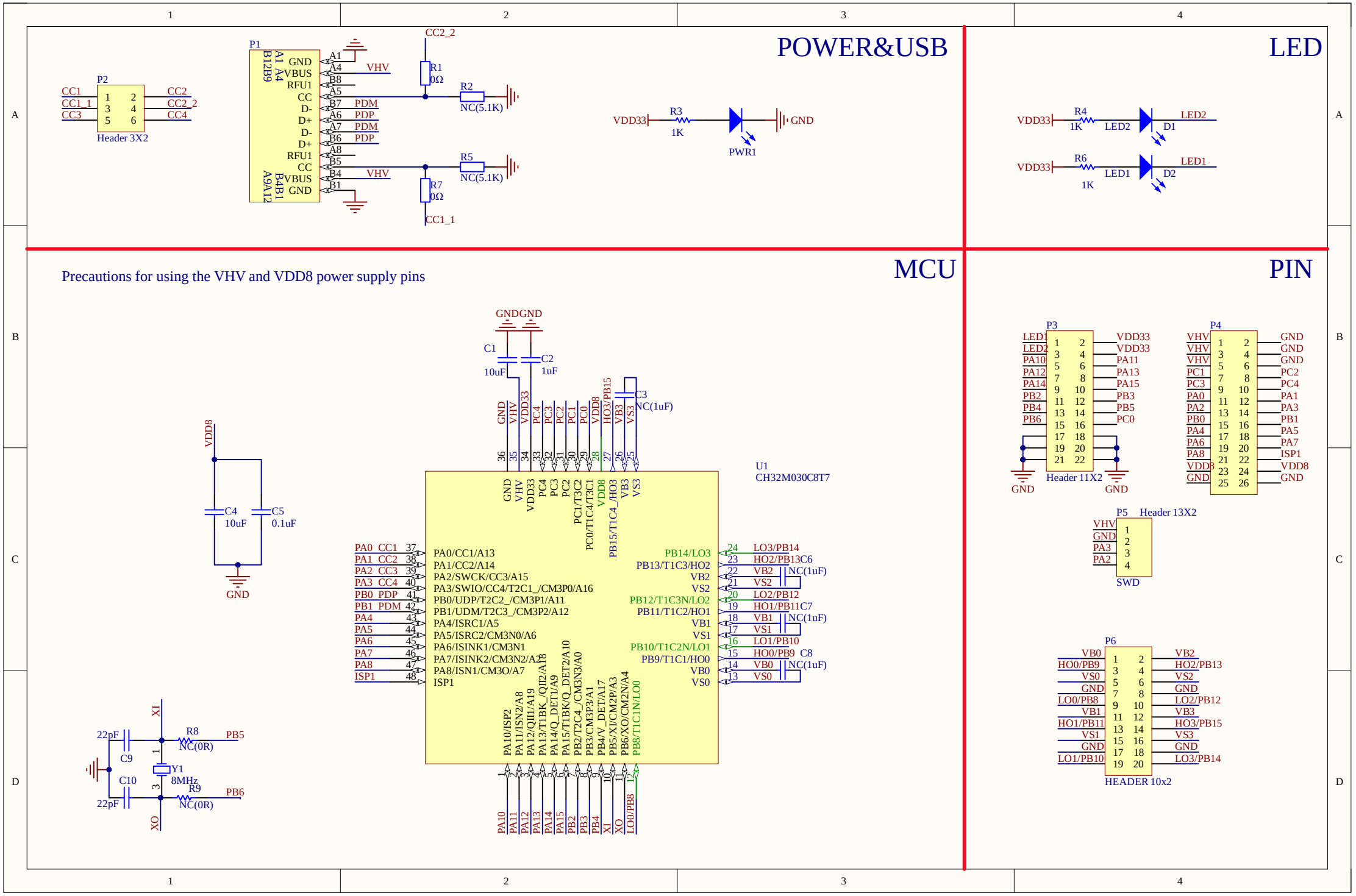
POWER&USB
LED
MCU
PIN
Precautions for using the VHV and VDD8 power supply pins
P2
Header 3X2
P1
R1 0Ω
R2 NC(5.1K)
R5 NC(5.1K)
R7 0Ω
R3 1K
PWR1
R4 1K
R6 1K
LED1
LED2
D1
D2
U1
CH32M030C8T7
C1 10uF
C2 1uF
C3 NC(1uF)
C4 10uF
C5 0.1uF
C6 NC(1uF)
C7 NC(1uF)
C8 NC(1uF)
C9 22pF
C10 22pF
R8 NC(0R)
R9 NC(0R)
Y1 8MHz
P3
Header 11X2
P4
P5 Header 13X2
SWD
P6
HEADER 10x2

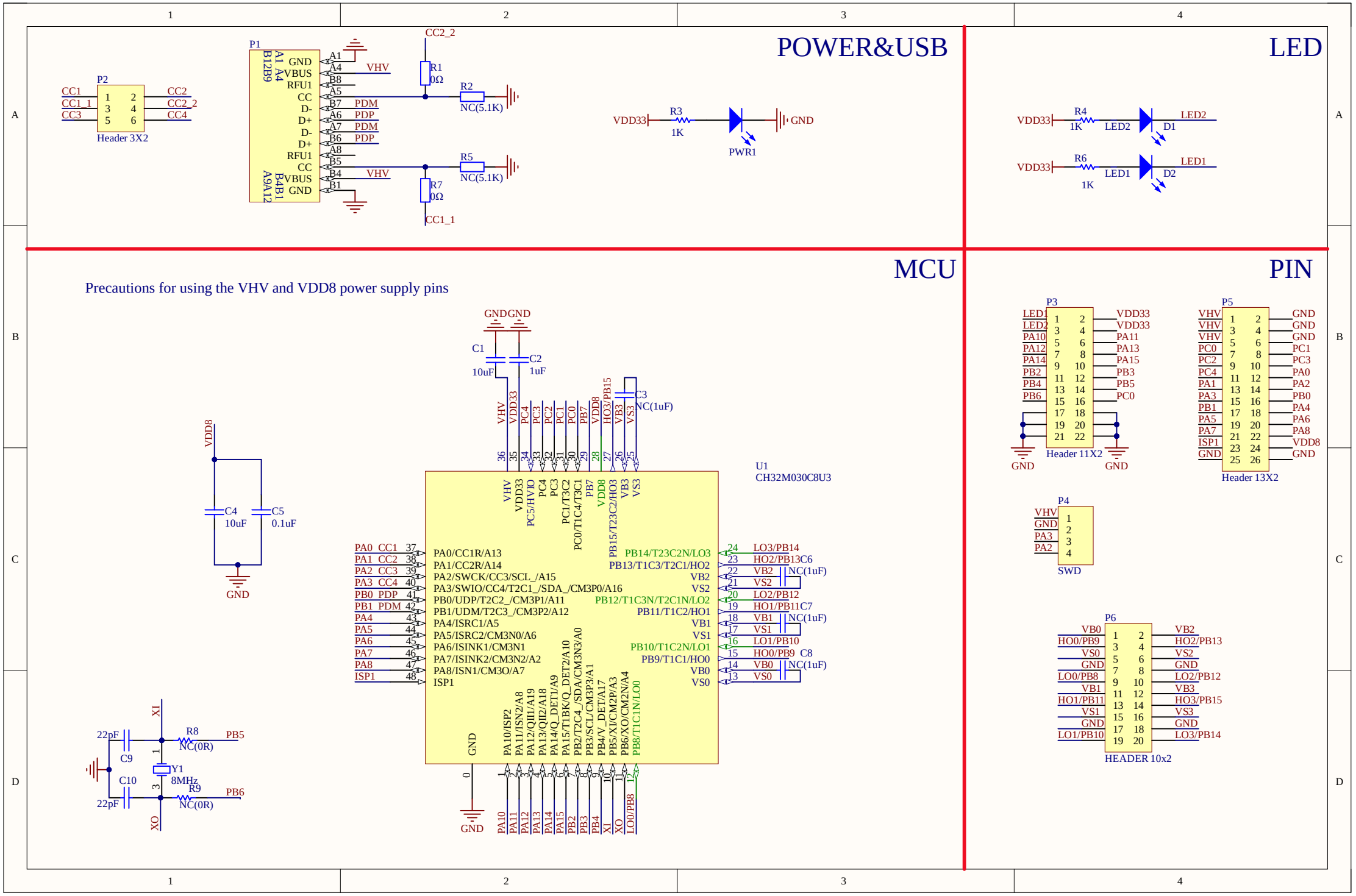
POWER&USB
LED
MCU
PIN
Precautions for using the VHV and VDD8 power supply pins
P1
P2
Header 3X2
R1 0Ω
R2 NC(5.1K)
R5 NC(5.1K)
R7 0Ω
R3 1K
PWR1
R4 1K
R6 1K
D1
D2
U1
CH32M030C8U3
C1 10uF
C2 1uF
C3 NC(1uF)
C4 10uF
C5 0.1uF
C8 NC(1uF)
C9 22pF
C10 22pF
R8 NC(0R)
R9 NC(0R)
Y1 8MHz
P3
Header 11X2
P5
Header 13X2
P4
SWD
P6
HEADER 10x2

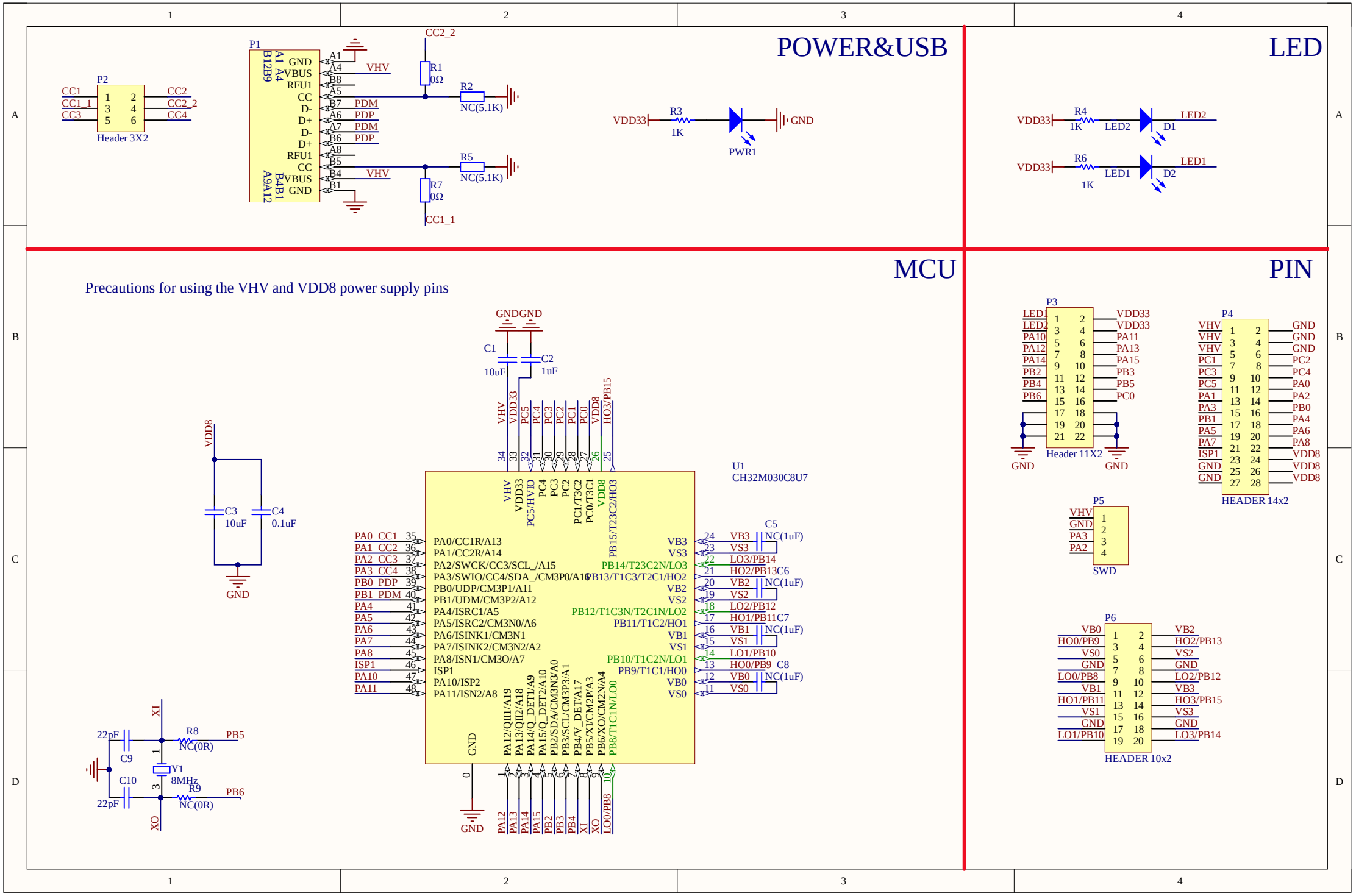
POWER&USB
LED
MCU
PIN
Precautions for using the VHV and VDD8 power supply pins
P1
P2
Header 3X2
R1 0Ω
R2 NC(5.1K)
R3 1K
PWR1
R4 1K
R5 NC(5.1K)
R6 1K
R7 0Ω
D1
D2
C1 10uF
C2 1uF
C3 10uF
C4 0.1uF
U1
CH32M030C8U7
C5 NC(1uF)
C8 NC(1uF)
C9 22pF
C10 22pF
R8 NC(0R)
R9 NC(0R)
Y1 8MHz
P3
Header 11X2
P4
HEADER 14x2
P5
SWD
P6
HEADER 10x2

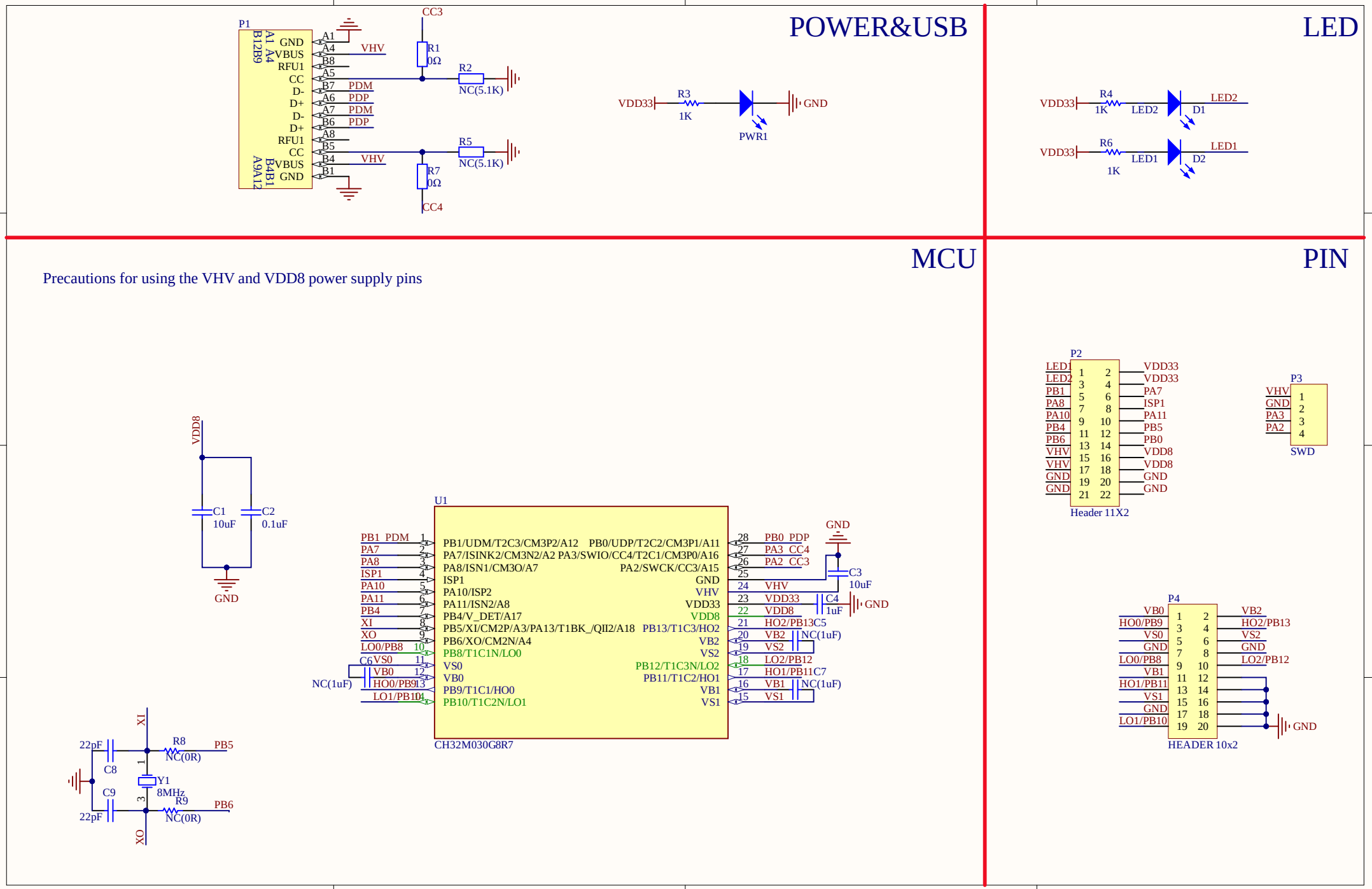
POWER&USB
LED
MCU
PIN
Precautions for using the VHV and VDD8 power supply pins
P1
GND
VBUS
RFU1
CC
D-
D+
D-
D+
RFU1
CC
VBUS
GND
VHV
PDM
PDP
PDM
PDP
VHV
CC3
CC4
R1 0Ω
R2 NC(5.1K)
R5 NC(5.1K)
R7 0Ω
VDD33
R3 1K
PWR1
GND
R4 1K
LED2
D1
R6 1K
LED1
D2
VDD8
C1 10uF
C2 0.1uF
GND
U1
PB1/UDM/T2C3/CM3P2/A12
PA7/ISINK2/CM3N2/A2
PA8/ISN1/CM3O/A7
ISP1
PA10/ISP2
PA11/ISN2/A8
PB4/V_DET/A17
PB5/XI/CM2P/A3/PA13/T1BK_/QII2/A18
PB6/XO/CM2N/A4
PB8/T1C1N/LO0
VS0
VB0
PB9/T1C1/HO0
PB10/T1C2N/LO1
PB0/UDP/T2C2/CM3P1/A11
PA3/SWIO/CC4/T2C1/CM3P0/A16
PA2/SWCK/CC3/A15
GND
VHV
VDD33
VDD8
PB13/T1C3/HO2
VB2
VS2
PB12/T1C3N/LO2
PB11/T1C2/HO1
VB1
VS1
PB1_PDM
PA7
PA8
ISP1
PA10
PA11
PB4
XI
XO
LO0/PB8
LO1/PB10
PB0_PDP
PA3_CC4
PA2_CC3
VHV
VDD33
VDD8
HO2/PB13
VB2
VS2
LO2/PB12
HO1/PB11
VB1
VS1
C3 10uF
C4 1uF
C5 NC(1uF)
C6 NC(1uF)
C7 NC(1uF)
CH32M030G8R7
XI
XO
22pF
C8
C9
R8 NC(0R)
R9 NC(0R)
PB5
PB6
Y1 8MHz
P2
Header 11X2
P3
SWD
P4
HEADER 10x2

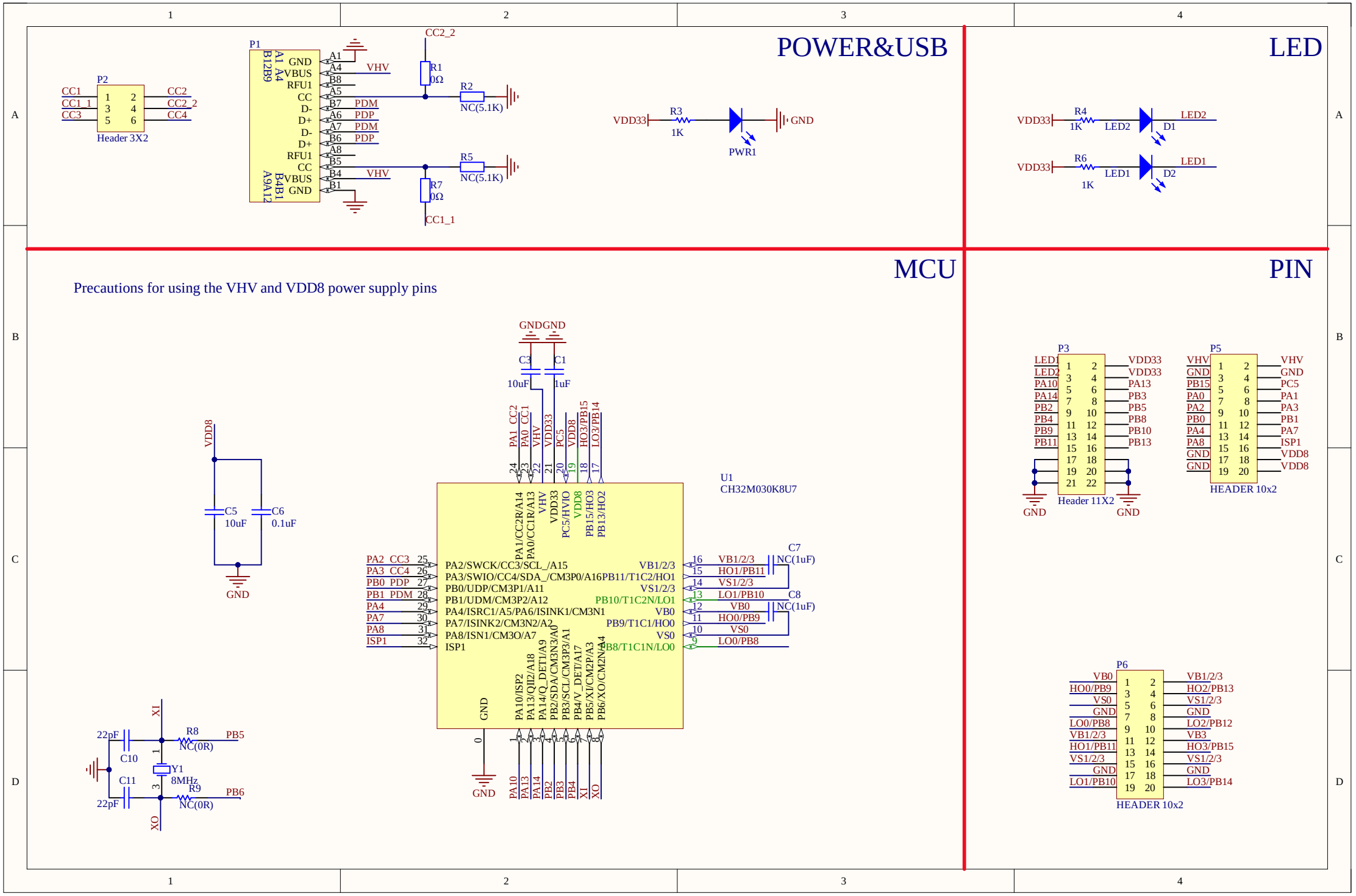
POWER&USB
LED
MCU
PIN
Precautions for using the VHV and VDD8 power supply pins
P2
Header 3X2
P1
R1 0Ω
R2 NC(5.1K)
R5 NC(5.1K)
R7 0Ω
R3 1K
PWR1
R4 1K
R6 1K
LED1
LED2
D1
D2
U1
CH32M030K8U7
C3 10uF
C1 1uF
C5 10uF
C6 0.1uF
C7 NC(1uF)
C8 NC(1uF)
Y1 8MHz
R8 NC(0R)
R9 NC(0R)
C10 22pF
C11 22pF
P3
Header 11X2
P5
HEADER 10x2
P6
HEADER 10x2