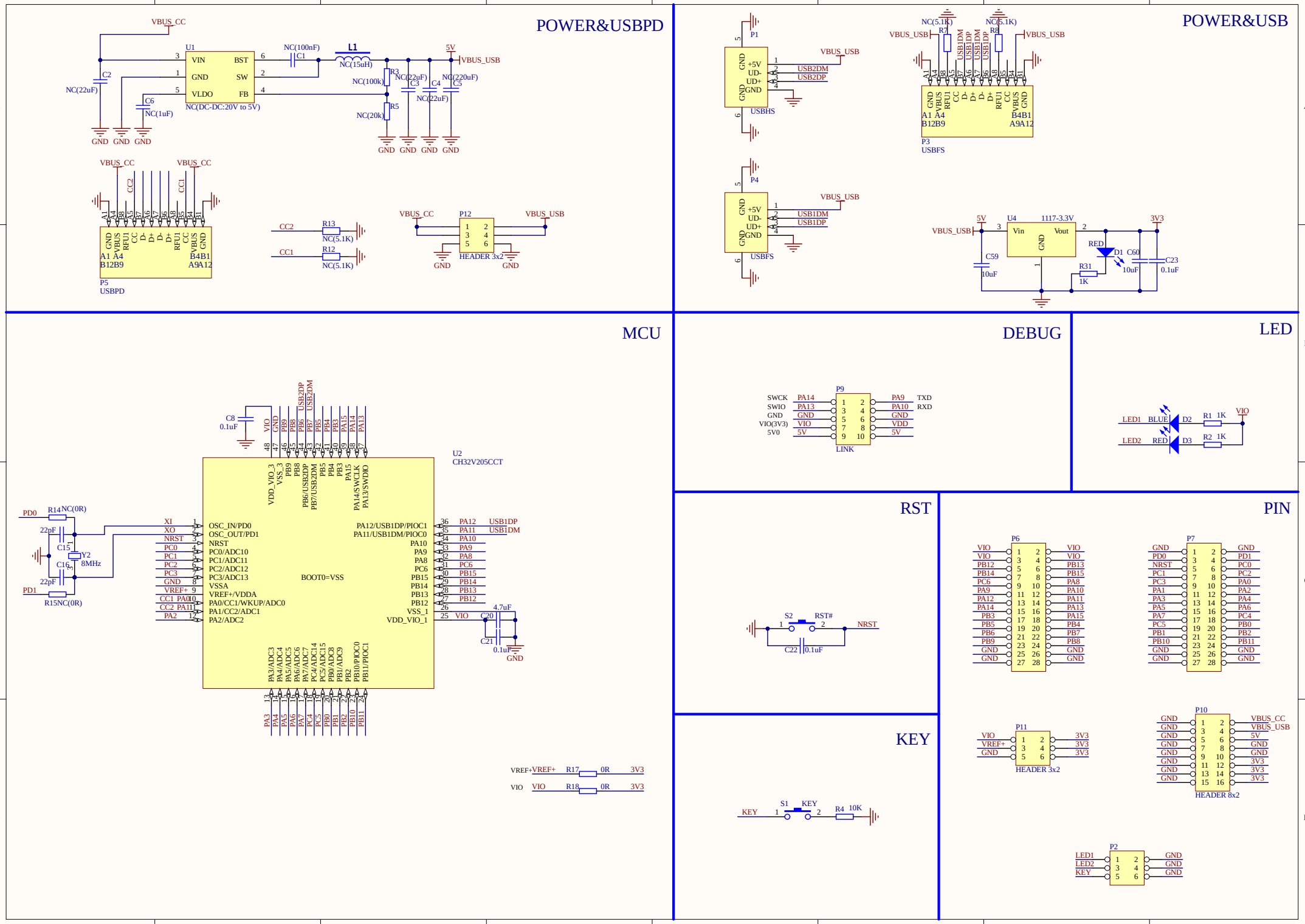
POWER&USBPD
VBUS_CC
U1
VIN
GND
VLDO
BST
SW
FB
NC(DC-DC:20V to 5V)
C1
NC(100nF)
L1
NC(15uH)
5V
VBUS_USB
C2
NC(22uF)
C6
NC(1uF)
R3
NC(100k)
R5
NC(20k)
C3
NC(22uF)
C4
NC(22uF)
C5
NC(220uF)
GND
P5
USBPD
CC2
CC1
R13
NC(5.1K)
R12
NC(5.1K)
P12
HEADER 3x2
POWER&USB
P1
USBHS
USB2DM
USB2DP
R7
NC(5.1K)
R8
NC(5.1K)
P3
USBFS
P4
USBFS
USB1DM
USB1DP
U4
1117-3.3V
Vin
Vout
3V3
C59
10uF
RED
D1
C60
10uF
C23
0.1uF
R31
1K
MCU
C8
0.1uF
VIO
U2
CH32V205CCT
OSC_IN/PD0
OSC_OUT/PD1
NRST
PC0/ADC10
PC1/ADC11
PC2/ADC12
PC3/ADC13
VSSA
VREF+/VDDA
PA0/CC1/WKUP/ADC0
PA1/CC2/ADC1
PA2/ADC2
BOOT0=VSS
PA12/USB1DP/PIOC1
PA11/USB1DM/PIOC0
PA10
PA9
PA8
PC6
PB15
PB14
PB13
PB12
VSS_1
VDD_VIO_1
PD0
R14NC(0R)
22pF
C15
Y2
8MHz
C16
22pF
PD1
R15NC(0R)
XI
XO
PC0
PC1
PC2
PC3
GND
VREF+
CC1 PA0
CC2 PA1
PA2
USB1DP
USB1DM
C20
4.7uF
C21
0.1uF
VREF+
R17
0R
3V3
VIO
R18
DEBUG
P9
SWCK
SWIO
GND
VIO(3V3)
5V0
PA14
PA13
VIO
5V
PA9
PA10
VDD
TXD
RXD
LINK
LED
LED1
BLUE
D2
R1 1K
LED2
RED
D3
R2 1K
RST
S2
RST#
NRST
C22
0.1uF
PIN
P6
P7
P11
HEADER 3x2
P10
HEADER 8x2
KEY
S1
R4 10K
P2
LED1
LED2
KEY

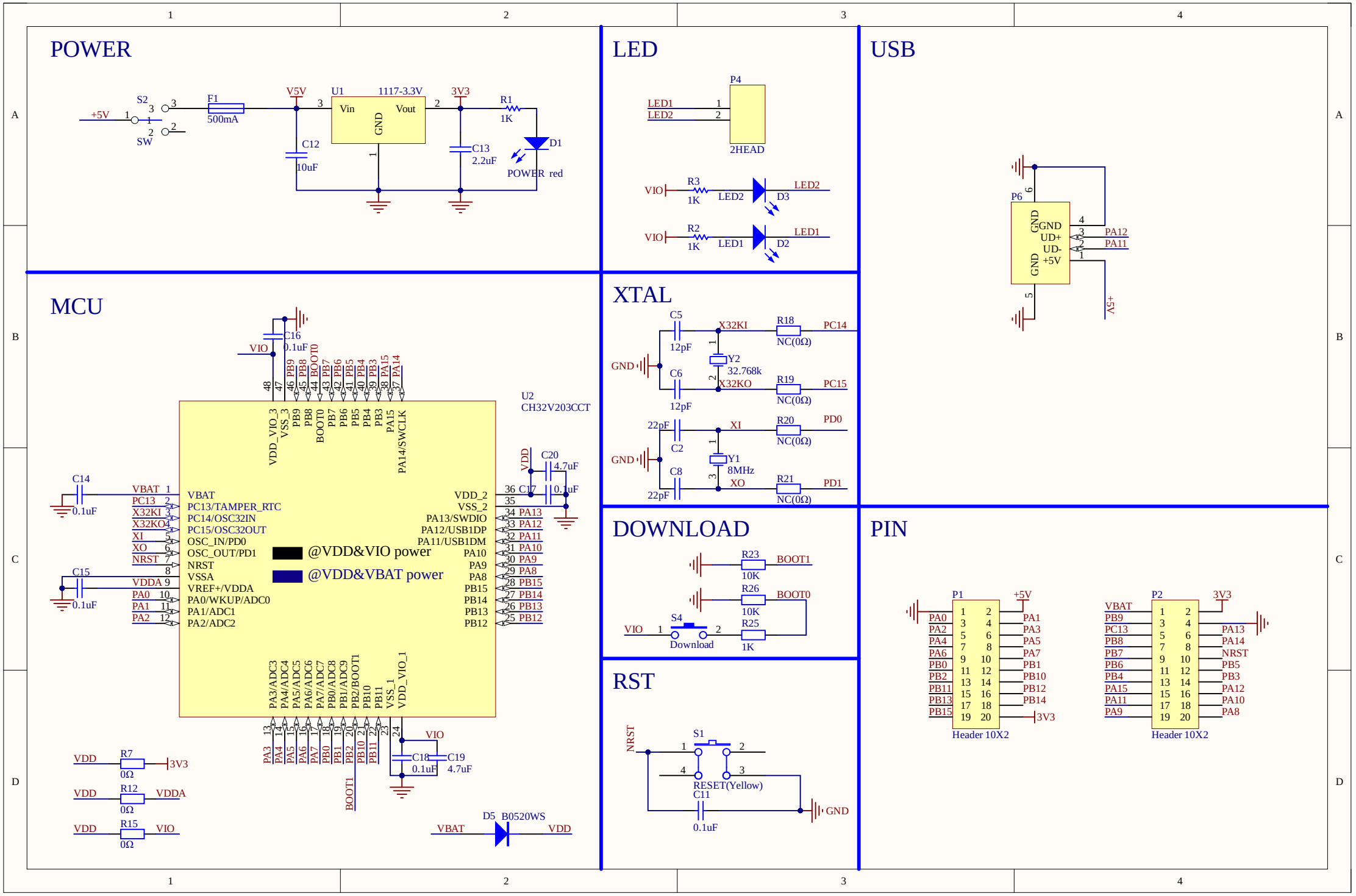
POWER
+5V
S2
SW
F1
500mA
V5V
U1
1117-3.3V
Vin
Vout
GND
3V3
R1
1K
D1
POWER red
C12
10uF
C13
2.2uF
LED
P4
LED1
LED2
2HEAD
VIO
R3
1K
LED2
D3
R2
1K
LED1
D2
USB
P6
GND
UD+
UD-
+5V
PA12
PA11
MCU
U2
CH32V203CCT
C16
0.1uF
VIO
VDD_VIO_3
VSS_3
PB9
PB8
BOOT0
PB7
PB6
PB5
PB4
PB3
PA15
PA14/SWCLK
C14
0.1uF
C15
0.1uF
VBAT
PC13
X32KI
X32KO
XI
XO
NRST
VDDA
PA0
PA1
PA2
PC13/TAMPER_RTC
PC14/OSC32IN
PC15/OSC32OUT
OSC_IN/PD0
OSC_OUT/PD1
VSSA
VREF+/VDDA
PA0/WKUP/ADC0
PA1/ADC1
PA2/ADC2
@VDD&VIO power
@VDD&VBAT power
VDD_2
VSS_2
PA13/SWDIO
PA12/USB1DP
PA11/USB1DM
PA10
PA9
PA8
PB15
PB14
PB13
PB12
C20
4.7uF
C17
0.1uF
PA3/ADC3
PA4/ADC4
PA5/ADC5
PA6/ADC6
PA7/ADC7
PB0/ADC8
PB1/ADC9
PB2/BOOT1
PB10
PB11
VSS_1
VDD_VIO_1
C18
0.1uF
C19
4.7uF
R7
0Ω
3V3
R12
0Ω
VDDA
R15
0Ω
D5 B0520WS
XTAL
C5
12pF
C6
12pF
X32KI
X32KO
Y2
32.768k
R18
NC(0Ω)
PC14
R19
NC(0Ω)
PC15
22pF
C2
C8
22pF
XI
XO
Y1
8MHz
R20
NC(0Ω)
PD0
R21
NC(0Ω)
PD1
DOWNLOAD
R23
10K
BOOT1
R26
10K
BOOT0
S4
Download
R25
1K
RST
S1
RESET(Yellow)
C11
0.1uF
PIN
P1
Header 10X2
P2
Header 10X2

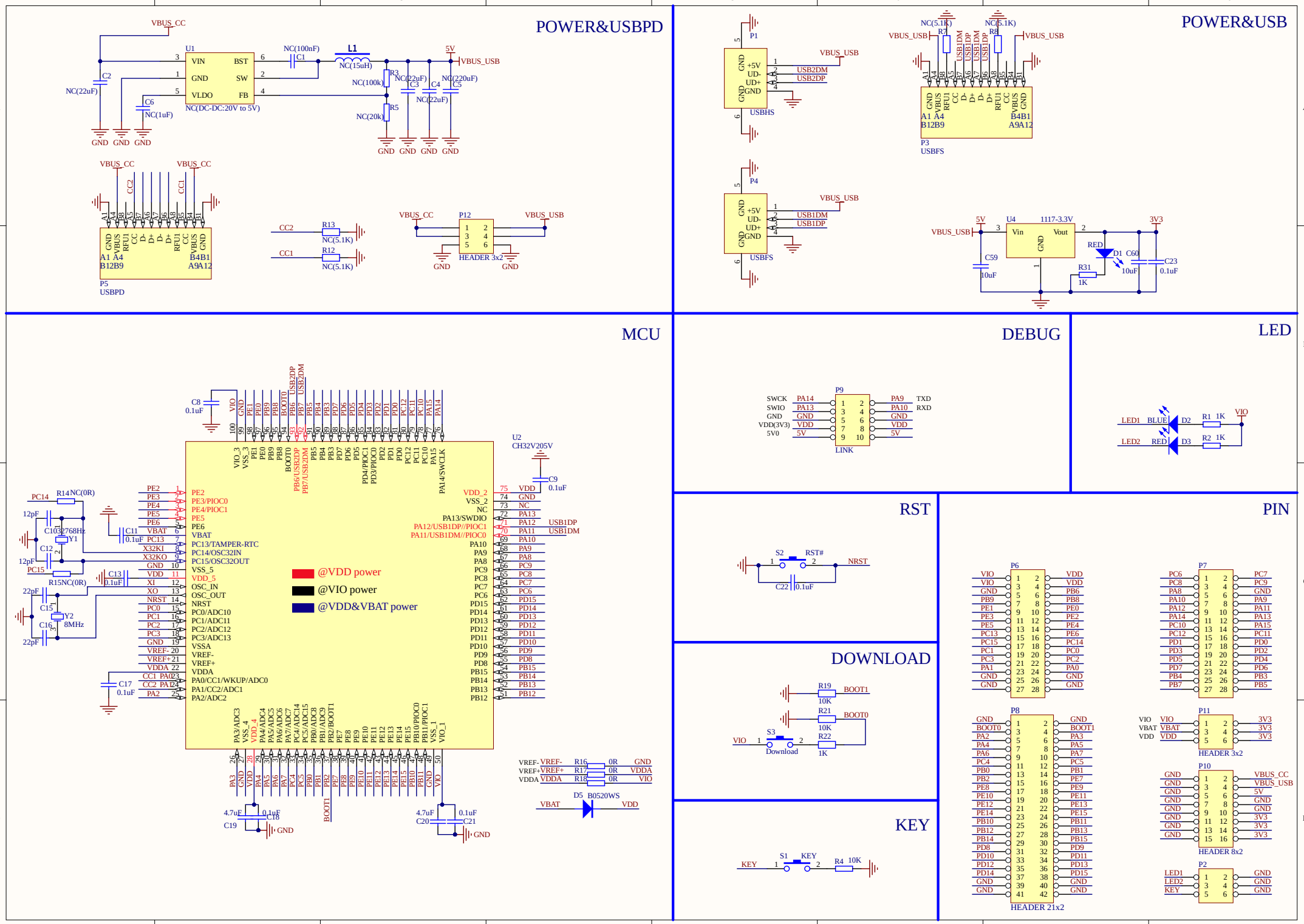
POWER&USBPD
U1
VIN
GND
VLDO
BST
SW
FB
NC(DC-DC:20V to 5V)
NC(100nF)
C1
L1
NC(15uH)
5V
VBUS_USB
NC(22uF)
C2
C6
NC(1uF)
R3
NC(100k)
NC(22uF)
C3
C4
NC(220uF)
C5
R5
NC(20k)
GND
VBUS_CC
CC2
CC1
P5
USBPD
R13
NC(5.1K)
R12
NC(5.1K)
P12
HEADER 3x2
POWER&USB
P1
USBHS
USB2DM
USB2DP
NC(5.1K)
R7
R8
P3
USBFS
P4
USB1DM
USB1DP
U4
1117-3.3V
Vin
Vout
3V3
C59
10uF
RED
D1
C60
10uF
C23
0.1uF
R31
1K
MCU
C8
0.1uF
VIO
U2
CH32V205V
C9
0.1uF
PC14
R14NC(0R)
12pF
C10
32768Hz
Y1
C11
0.1uF
C12
PC15
R15NC(0R)
C13
0.1uF
22pF
C15
Y2
8MHz
C16
C17
0.1uF
@VDD power
@VIO power
@VDD&VBAT power
VREF-
VREF+
VDDA
R16
R17
R18
0R
D5
B0520WS
VBAT
VDD
4.7uF
C19
C18
C20
C21
DEBUG
P9
SWCK
SWIO
GND
VDD(3V3)
5V0
PA14
PA13
VDD
5V
PA9
PA10
TXD
RXD
LINK
LED
LED1
BLUE
D2
R1 1K
LED2
RED
D3
R2 1K
RST
S2
RST#
NRST
C22
0.1uF
DOWNLOAD
R19
10K
BOOT1
R21
10K
BOOT0
S3
Download
R22
1K
KEY
S1
KEY
R4 10K
PIN
P6
P7
P8
HEADER 21x2
P11
HEADER 3x2
P10
HEADER 8x2
P2

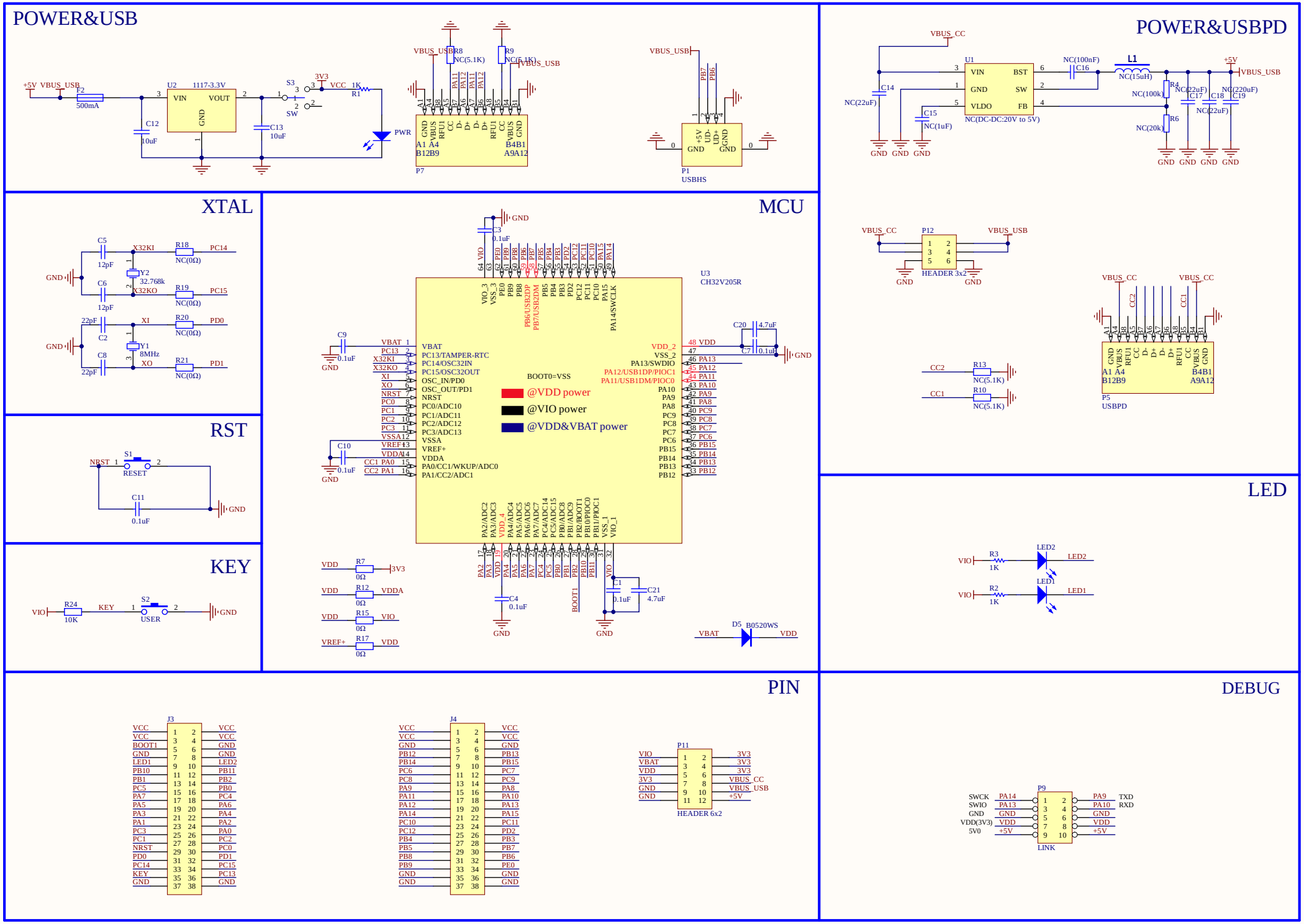
POWER&USB
U2 1117-3.3V
VIN VOUT GND
F2 500mA
C12 10uF
C13 10uF
S3 SW
3V3 VCC 1K R1
PWR
VBUS_USB
R8 NC(5.1K)
R9 NC(5.1K)
P7
P1 USBHS
POWER&USBPD
U1
VIN BST GND SW VLDO FB
NC(DC-DC:20V to 5V)
NC(100nF) C16
L1 NC(15uH)
+5V
NC(100k) R4
NC(20k) R6
NC(22uF) C17
NC(220uF) C18 C19
NC(22uF)
C14 NC(22uF)
C15 NC(1uF)
GND
XTAL
C5 12pF
C6 12pF
X32KI X32KO
Y2 32.768k
R18 NC(0Ω) PC14
R19 NC(0Ω) PC15
C2 22pF
C8 22pF
Y1 8MHz
XI XO
R20 NC(0Ω) PD0
R21 NC(0Ω) PD1
RST
NRST S1 RESET
C11 0.1uF
KEY
VIO R24 10K KEY S2 USER
MCU
U3 CH32V205R
C3 0.1uF
C9 0.1uF
C10 0.1uF
C20 4.7uF
C7 0.1uF
C1 0.1uF
C21 4.7uF
C4 0.1uF
BOOT0=VSS
@VDD power
@VIO power
@VDD&VBAT power
VBAT
PC13/TAMPER-RTC
PC14/OSC32IN
PC15/OSC32OUT
OSC_IN/PD0
OSC_OUT/PD1
NRST
PC0/ADC10
PC1/ADC11
PC2/ADC12
PC3/ADC13
VSSA
VREF+
VDDA
PA0/CC1/WKUP/ADC0
PA1/CC2/ADC1
VDD_2
VSS_2
PA13/SWDIO
PA12/USB1DP/PIOC1
PA11/USB1DM/PIOC0
PA10
PA9
PA8
PC9
PC8
PC7
PC6
PB15
PB14
PB13
PB12
R7 0Ω
R12 0Ω
R15 0Ω
R17 0Ω
D5 B0520WS
LED
R3 1K LED2
R2 1K LED1
PIN
J3
J4
P11 HEADER 6x2
DEBUG
P9 LINK
P12 HEADER 3x2
P5 USBPD
CC2 R13 NC(5.1K)
CC1 R10 NC(5.1K)