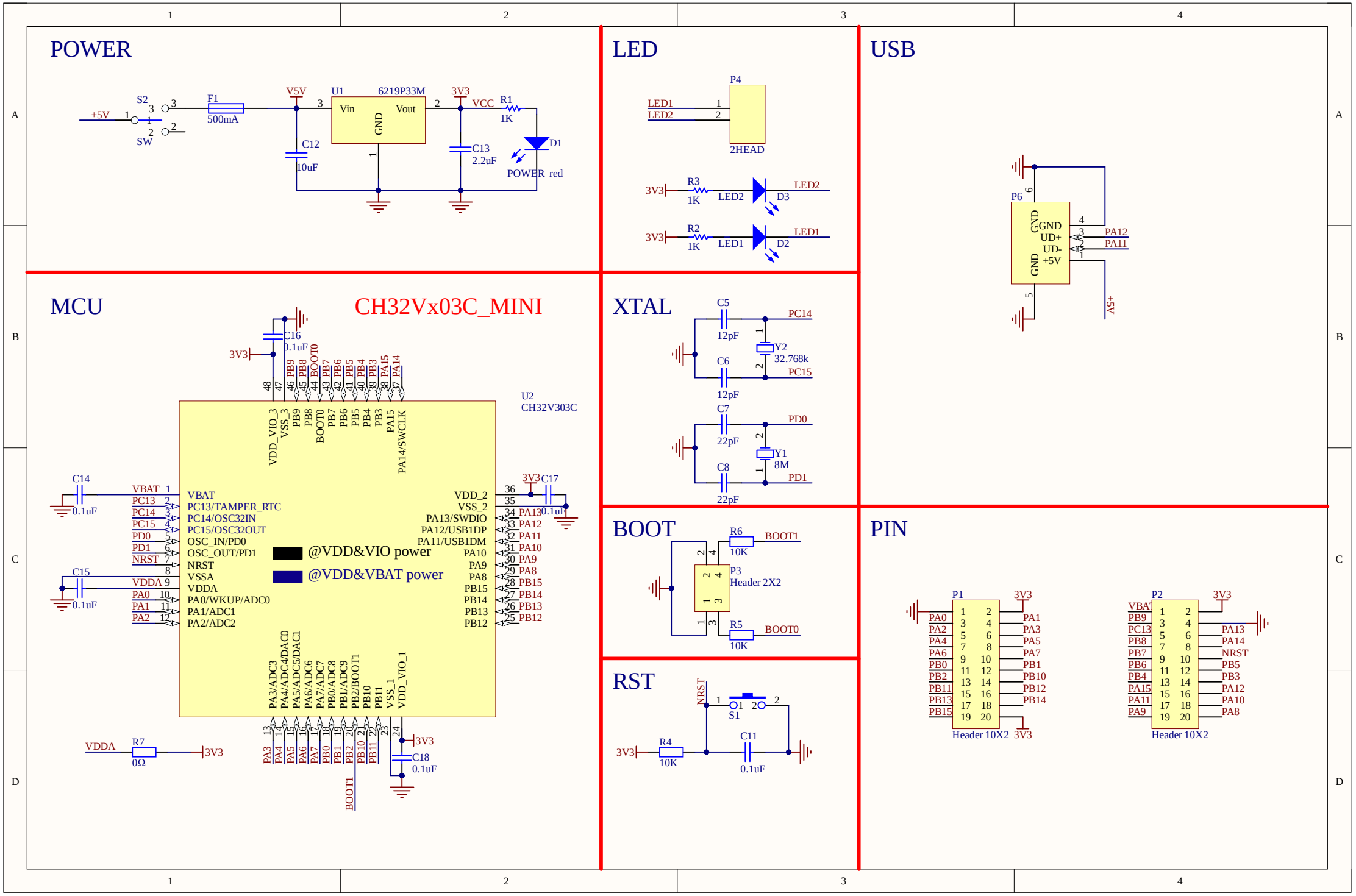
POWER
S2
+5V
SW
F1
500mA
V5V
U1
6219P33M
Vin
Vout
GND
3V3
VCC
R1
1K
C12
10uF
C13
2.2uF
D1
POWER red
LED
P4
LED1
LED2
2HEAD
3V3
R3
1K
LED2
D3
R2
1K
LED1
D2
USB
P6
GND
UD+
UD-
+5V
PA12
PA11
MCU
CH32Vx03C_MINI
C16
0.1uF
U2
CH32V303C
VDD_VIO_3
VSS_3
PB9
PB8
BOOT0
PB7
PB6
PB5
PB4
PB3
PA15
PA14/SWCLK
C14
0.1uF
C15
0.1uF
VBAT
PC13
PC14
PC15
PD0
PD1
NRST
VDDA
PA0
PA1
PA2
VBAT
PC13/TAMPER_RTC
PC14/OSC32IN
PC15/OSC32OUT
OSC_IN/PD0
OSC_OUT/PD1
NRST
VSSA
VDDA
PA0/WKUP/ADC0
PA1/ADC1
PA2/ADC2
@VDD&VIO power
@VDD&VBAT power
VDD_2
VSS_2
PA13/SWDIO
PA12/USB1DP
PA11/USB1DM
PA10
PA9
PA8
PB15
PB14
PB13
PB12
C17
0.1uF
PA3/ADC3
PA4/ADC4/DAC0
PA5/ADC5/DAC1
PA6/ADC6
PA7/ADC7
PB0/ADC8
PB1/ADC9
PB2/BOOT1
PB10
PB11
VSS_1
VDD_VIO_1
R7
0Ω
C18
0.1uF
XTAL
C5
12pF
C6
12pF
PC14
PC15
Y2
32.768k
C7
22pF
C8
22pF
PD0
PD1
Y1
8M
BOOT
R6
10K
R5
10K
BOOT1
BOOT0
P3
Header 2X2
RST
NRST
S1
R4
10K
C11
0.1uF
PIN
P1
Header 10X2
P2
Header 10X2

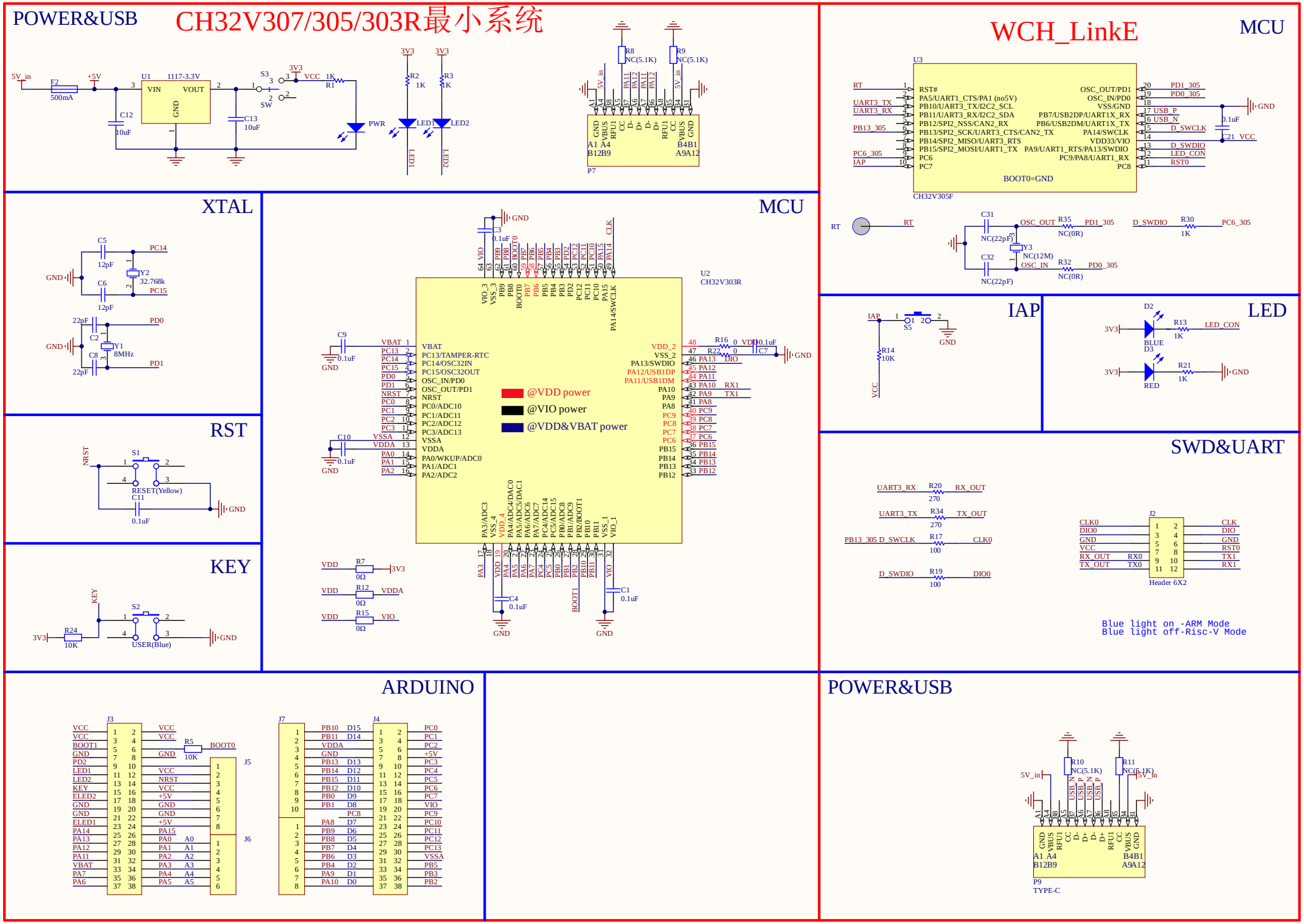
POWER&USB
CH32V307/305/303R最小系统
WCH_LinkE
MCU
XTAL
MCU
IAP
LED
RST
SWD&UART
KEY
ARDUINO
POWER&USB
U1 1117-3.3V
U3
CH32V305F
U2
CH32V303R
@VDD power
@VIO power
@VDD&VBAT power
Blue light on -ARM Mode
Blue light off-Risc-V Mode
Header 6X2
TYPE-C

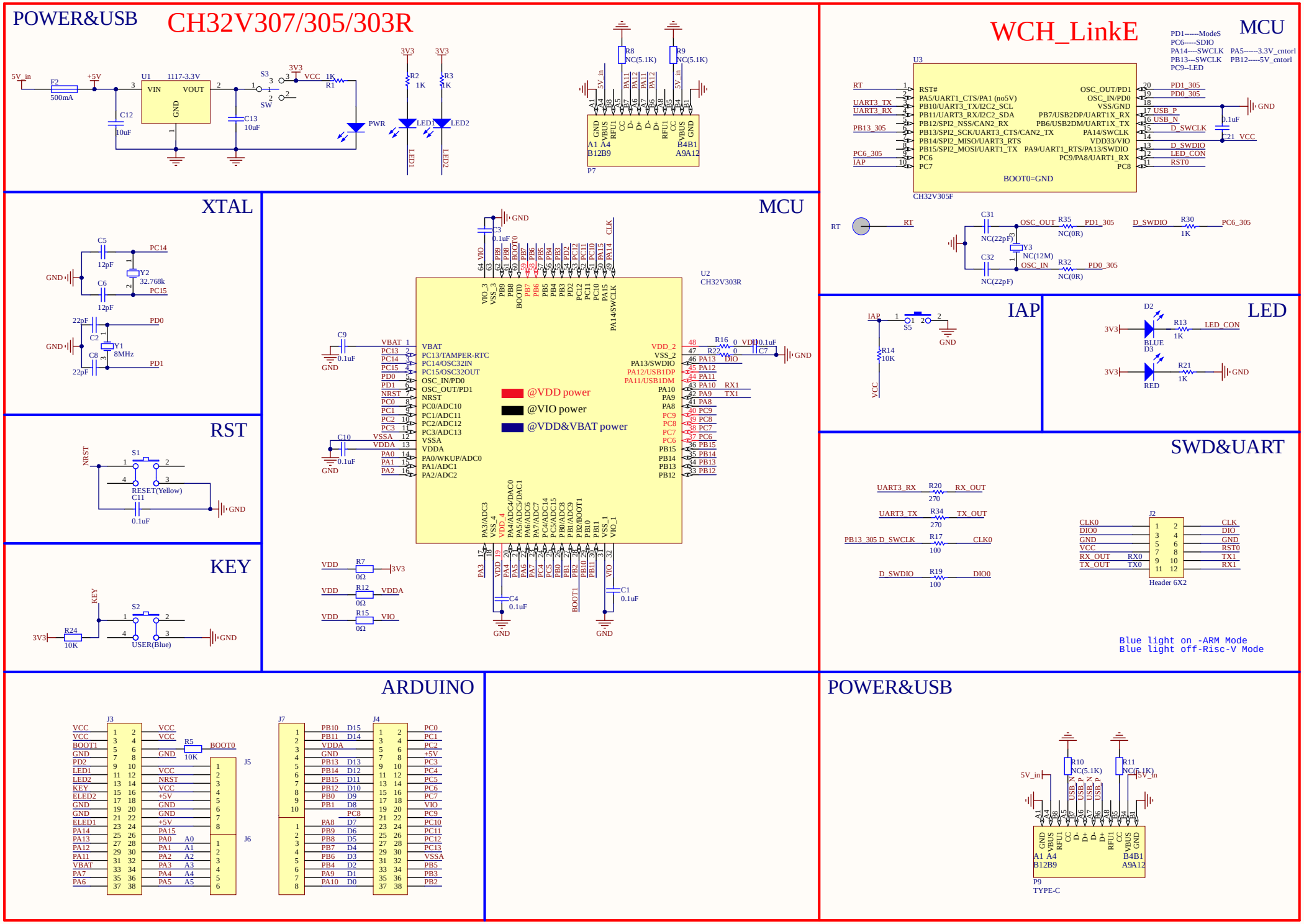
POWER&USB
CH32V307/305/303R
5V_in
F2
500mA
+5V
U1
1117-3.3V
VIN
VOUT
GND
C12
10uF
C13
10uF
S3
SW
3V3
VCC
1K
R1
PWR
R2
1K
R3
1K
LED1
LED2
R8
NC(5.1K)
R9
NC(5.1K)
GND
VBUS
RFU1
CC
D-
D+
RFU1
CC
VBUS
GND
A1 A4
B12B9
B4B1
A9A12
P7
WCH_LinkE
MCU
PD1------ModeS
PC6-----SDIO
PA14----SWCLK
PB13---SWCLK
PC9--LED
PA5------3.3V_cntorl
PB12-----5V_cntorl
U3
RST#
PA5/UART1_CTS/PA1 (no5V)
PB10/UART3_TX/I2C2_SCL
PB11/UART3_RX/I2C2_SDA
PB12/SPI2_NSS/CAN2_RX
PB13/SPI2_SCK/UART3_CTS/CAN2_TX
PB14/SPI2_MISO/UART3_RTS
PB15/SPI2_MOSI/UART1_TX
PC6
PC7
OSC_OUT/PD1
OSC_IN/PD0
VSS/GND
PB7/USB2DP/UART1X_RX
PB6/USB2DM/UART1X_TX
PA14/SWCLK
VDD33/VIO
PA9/UART1_RTS/PA13/SWDIO
PC9/PA8/UART1_RX
PC8
BOOT0=GND
CH32V305F
RT
UART3_TX
UART3_RX
PB13_305
PC6_305
IAP
PD1_305
PD0_305
USB_P
USB_N
D_SWCLK
D_SWDIO
LED_CON
RST0
0.1uF
21_VCC
C31
NC(22pF)
C32
NC(22pF)
OSC_OUT
OSC_IN
R35
NC(0R)
R32
NC(0R)
Y3
NC(12M)
D_SWDIO
R30
1K
XTAL
C5
12pF
C6
12pF
PC14
PC15
Y2
32.768k
22pF
C2
C8
22pF
PD0
PD1
Y1
8MHz
MCU
U2
CH32V303R
C3
0.1uF
VIO
VIO_3
VSS_3
PB9
PB8
BOOT0
PB7
PB6
PB5
PB4
PB3
PD2
PC12
PC11
PC10
PA15
PA14/SWCLK
CLK
C9
0.1uF
C10
0.1uF
VBAT
PC13/TAMPER-RTC
PC14/OSC32IN
PC15/OSC32OUT
OSC_IN/PD0
OSC_OUT/PD1
NRST
PC0/ADC10
PC1/ADC11
PC2/ADC12
PC3/ADC13
VSSA
VDDA
PA0/WKUP/ADC0
PA1/ADC1
PA2/ADC2
@VDD power
@VIO power
@VDD&VBAT power
VDD_2
VSS_2
PA13/SWDIO
PA12/USB1DP
PA11/USB1DM
PA10
PA9
PA8
PC9
PC8
PC7
PC6
PB15
PB14
PB13
PB12
R16
R22
C7
0.1uF
DIO
RX1
TX1
PA3/ADC3
VSS_4
VDD_4
PA4/ADC4/DAC0
PA5/ADC5/DAC1
PA6/ADC6
PA7/ADC7
PC4/ADC14
PC5/ADC15
PB0/ADC8
PB1/ADC9
PB2/BOOT1
PB10
PB11
VSS_1
VIO_1
R7
0Ω
R12
0Ω
R15
0Ω
VDDA
VIO
C4
0.1uF
C1
0.1uF
BOOT1
IAP
S5
R14
10K
VCC
LED
D2
BLUE
D3
RED
R13
1K
R21
1K
LED_CON
SWD&UART
UART3_RX
R20
270
RX_OUT
UART3_TX
R34
270
TX_OUT
PB13_305 D_SWCLK
R17
100
CLK0
D_SWDIO
R19
100
DIO0
J2
CLK0
DIO0
GND
VCC
RX_OUT
TX_OUT
RX0
TX0
CLK
DIO
GND
RST0
TX1
RX1
Header 6X2
Blue light on -ARM Mode
Blue light off-Risc-V Mode
KEY
S2
R24
10K
USER(Blue)
ARDUINO
J3
VCC
BOOT1
GND
PD2
LED1
LED2
KEY
ELED2
PA14
PA13
PA12
PA11
VBAT
PA7
PA6
R5
10K
BOOT0
J5
J6
PA0
PA1
PA2
PA3
PA4
PA5
J7
PB10
PB11
VDDA
PB13
PB14
PB15
PB12
PB0
PB1
PA8
PB9
PB8
PB7
PB6
PB4
PA9
PA10
J4
PC0
PC1
PC2
+5V
PC3
PC4
PC5
PC6
PC7
VIO
PC9
PC10
PC11
PC12
PC13
VSSA
PB5
PB3
PB2
POWER&USB
R10
NC(5.1K)
R11
NC(5.1K)
USB_N
USB_P
USB_P
USB_N
A1 A4
B12B9
B4B1
A9A12
P9
TYPE-C

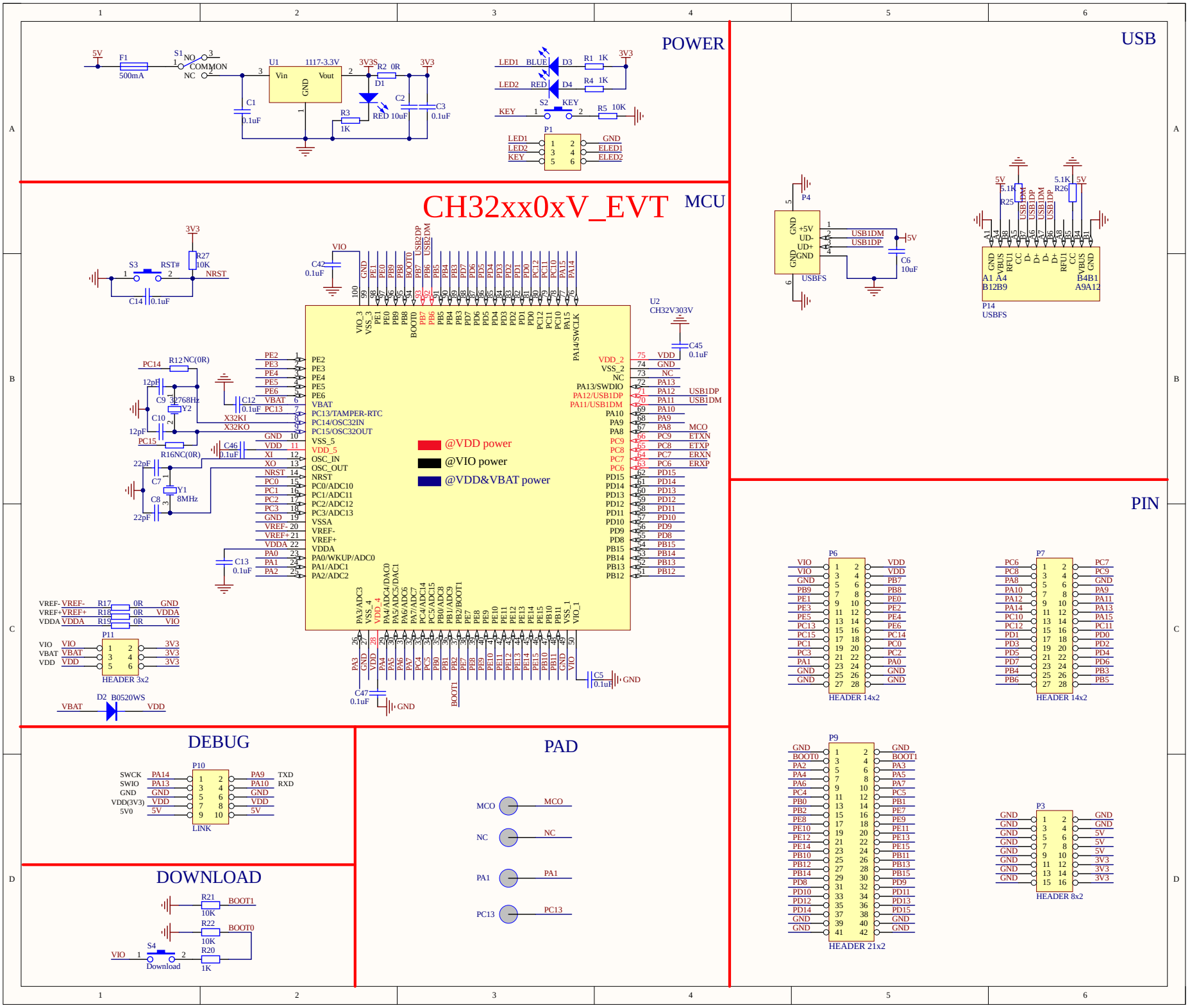
POWER
USB
CH32xx0xV_EVT
MCU
@VDD power
@VIO power
@VDD&VBAT power
PIN
DEBUG
PAD
DOWNLOAD

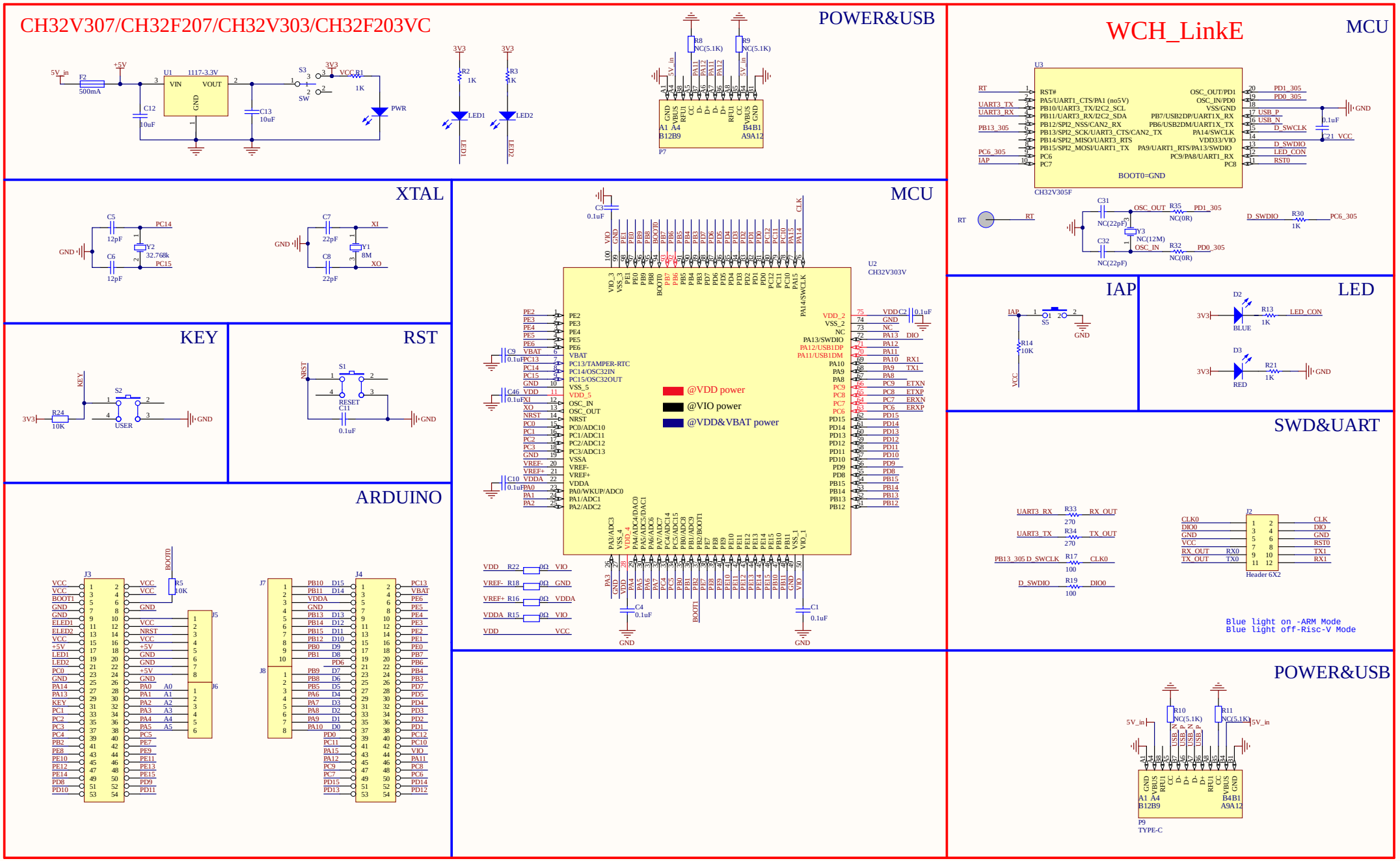
CH32V307/CH32F207/CH32V303/CH32F203VC
POWER&USB
WCH_LinkE
MCU
XTAL
MCU
IAP
LED
KEY
RST
SWD&UART
ARDUINO
POWER&USB
@VDD power
@VIO power
@VDD&VBAT power
Blue light on -ARM Mode
Blue light off-Risc-V Mode

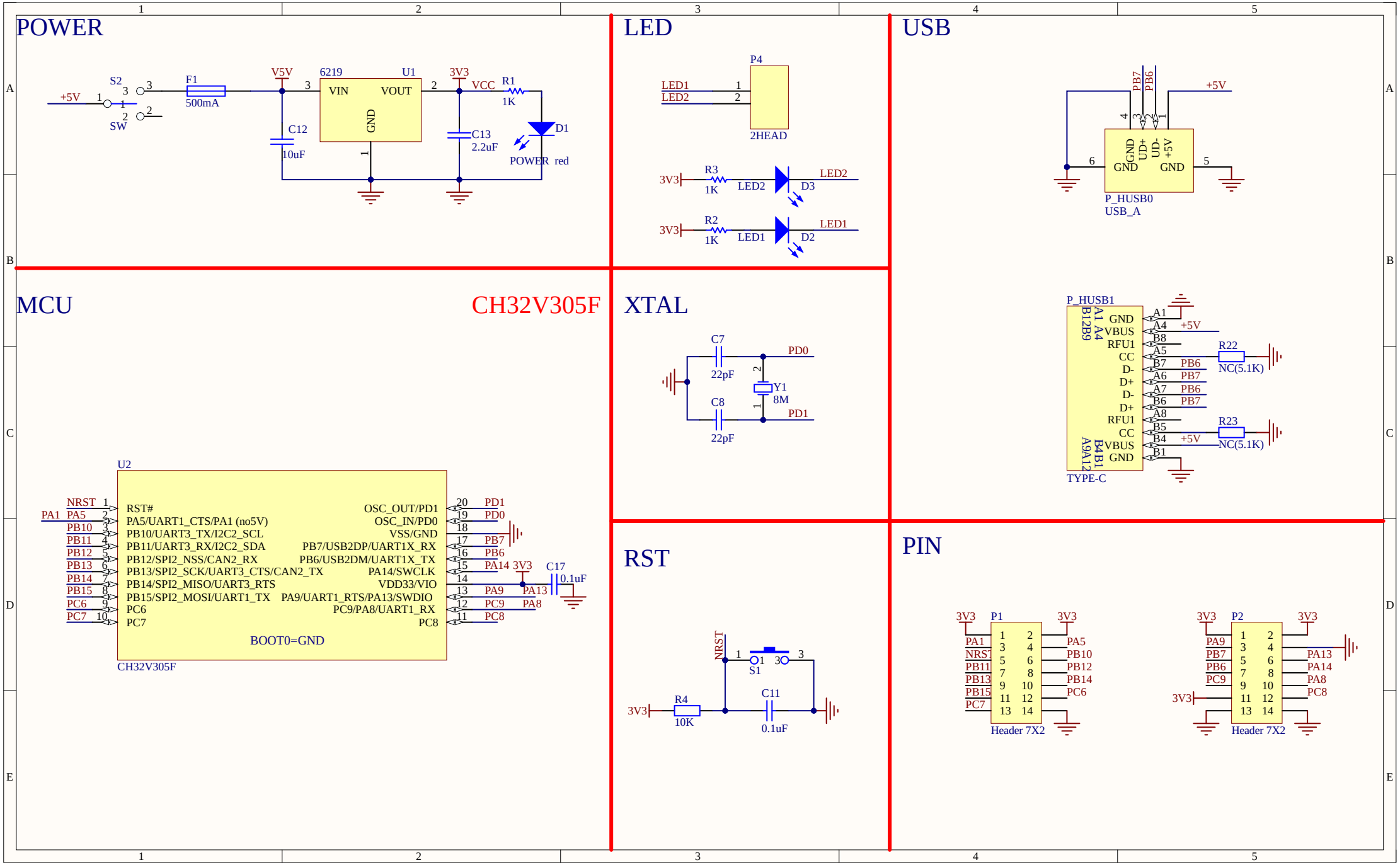
POWER
+5V
S2
SW
F1
500mA
V5V
6219
U1
VIN
VOUT
GND
C12
10uF
3V3
VCC
R1
1K
C13
2.2uF
D1
POWER red
LED
P4
LED1
LED2
2HEAD
3V3
R3
1K
LED2
D3
R2
1K
LED1
D2
USB
PB7
PB6
+5V
GND
UD+
UD-
+5V
GND
GND
P_HUSB0
USB_A
P_HUSB1
GND
VBUS
RFU1
CC
D-
D+
D-
D+
RFU1
CC
VBUS
GND
A1
A4
B8
A5
B7
A6
A7
B6
A8
B5
B4
B1
R22
NC(5.1K)
R23
NC(5.1K)
TYPE-C
MCU
CH32V305F
U2
NRST
PA1
PA5
PB10
PB11
PB12
PB13
PB14
PB15
PC6
PC7
RST#
PA5/UART1_CTS/PA1 (no5V)
PB10/UART3_TX/I2C2_SCL
PB11/UART3_RX/I2C2_SDA
PB12/SPI2_NSS/CAN2_RX
PB13/SPI2_SCK/UART3_CTS/CAN2_TX
PB14/SPI2_MISO/UART3_RTS
PB15/SPI2_MOSI/UART1_TX
PC6
PC7
OSC_OUT/PD1
OSC_IN/PD0
VSS/GND
PB7/USB2DP/UART1X_RX
PB6/USB2DM/UART1X_TX
PA14/SWCLK
VDD33/VIO
PA9/UART1_RTS/PA13/SWDIO
PC9/PA8/UART1_RX
PC8
PD1
PD0
PB7
PB6
PA14
PA9
PC9
PC8
PA13
PA8
3V3
C17
0.1uF
BOOT0=GND
CH32V305F
XTAL
C7
22pF
PD0
Y1
8M
C8
22pF
PD1
RST
NRST
S1
3V3
R4
10K
C11
0.1uF
PIN
3V3
P1
PA1
NRST
PB11
PB13
PB15
PC7
PA5
PB10
PB12
PB14
PC6
Header 7X2
P2
PA9
PB7
PB6
PC9
PA13
PA14
PA8
PC8
Header 7X2

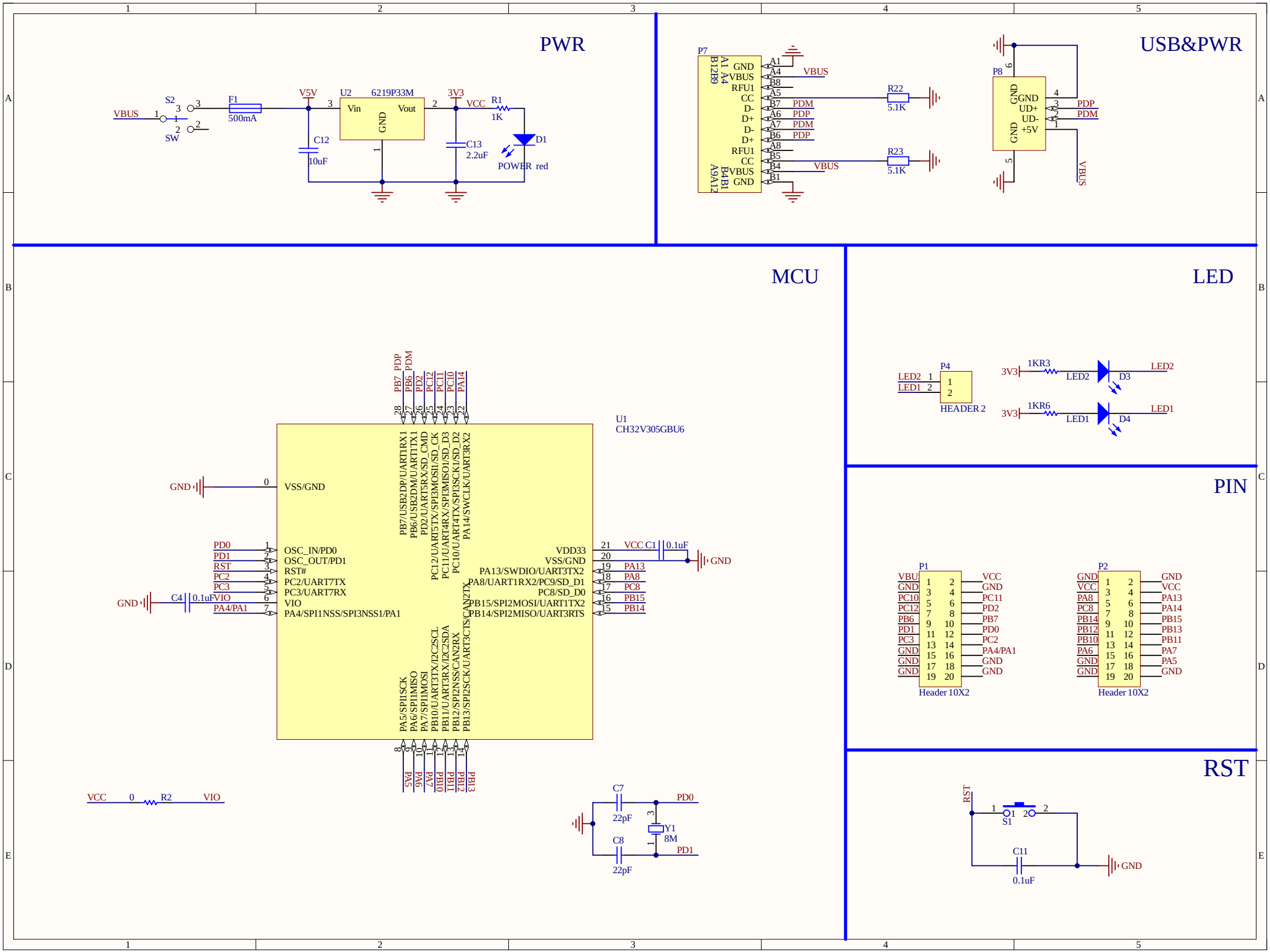
PWR
VBUS
S2
SW
F1
500mA
V5V
U2
6219P33M
Vin
Vout
GND
3V3
VCC
R1
1K
C12
10uF
C13
2.2uF
D1
POWER red
USB&PWR
P7
GND
VBUS
RFU1
CC
D-
D+
D-
D+
RFU1
CC
VBUS
GND
A1 A4 B12B9
A9A12 B4 B1
PDM
PDP
R22
5.1K
R23
5.1K
P8
GND
UD+
UD-
+5V
MCU
U1
CH32V305GBU6
VSS/GND
OSC_IN/PD0
OSC_OUT/PD1
RST#
PC2/UART7TX
PC3/UART7RX
VIO
PA4/SPI1NSS/SPI3NSS1/PA1
VDD33
VSS/GND
PA13/SWDIO/UART3TX2
PA8/UART1RX2/PC9/SD_D1
PC8/SD_D0
PB15/SPI2MOSI/UART1TX2
PB14/SPI2MISO/UART3RTS
PB7/USB2DP/UART1RX1
PB6/USB2DM/UART1TX1
PD2/UART5RX/SD_CMD
PC12/UART5TX/SPI3MOSI1/SD_CK
PC11/UART4RX/SPI3MISO1/SD_D3
PC10/UART4TX/SPI3SCK1/SD_D2
PA14/SWCLK/UART3RX2
PA5/SPI1SCK
PA6/SPI1MISO
PA7/SPI1MOSI
PB10/UART3TX/I2C2SCL
PB11/UART3RX/I2C2SDA
PB12/SPI2NSS/CAN2RX
PB13/SPI2SCK/UART3CTS/CAN2TX
C4 0.1uF
C1 0.1uF
R2
C7 22pF
C8 22pF
Y1 8M
LED
P4
HEADER 2
3V3
1KR3
1KR6
D3
D4
PIN
P1
Header 10X2
P2
Header 10X2
RST
S1
C11 0.1uF

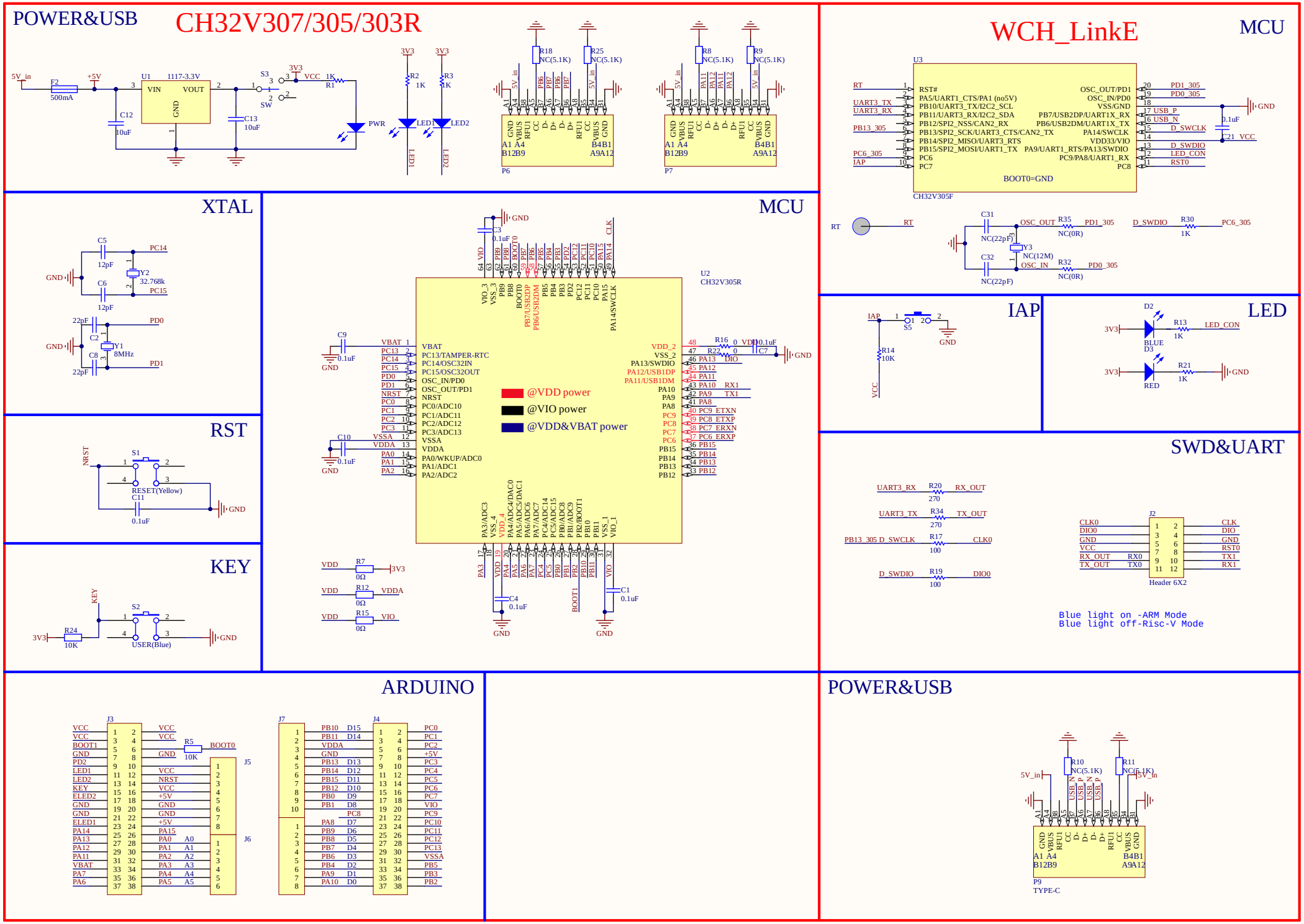
POWER&USB
CH32V307/305/303R
WCH_LinkE
MCU
XTAL
MCU
IAP
LED
RST
SWD&UART
KEY
ARDUINO
POWER&USB
@VDD power
@VIO power
@VDD&VBAT power
Blue light on -ARM Mode
Blue light off-Risc-V Mode

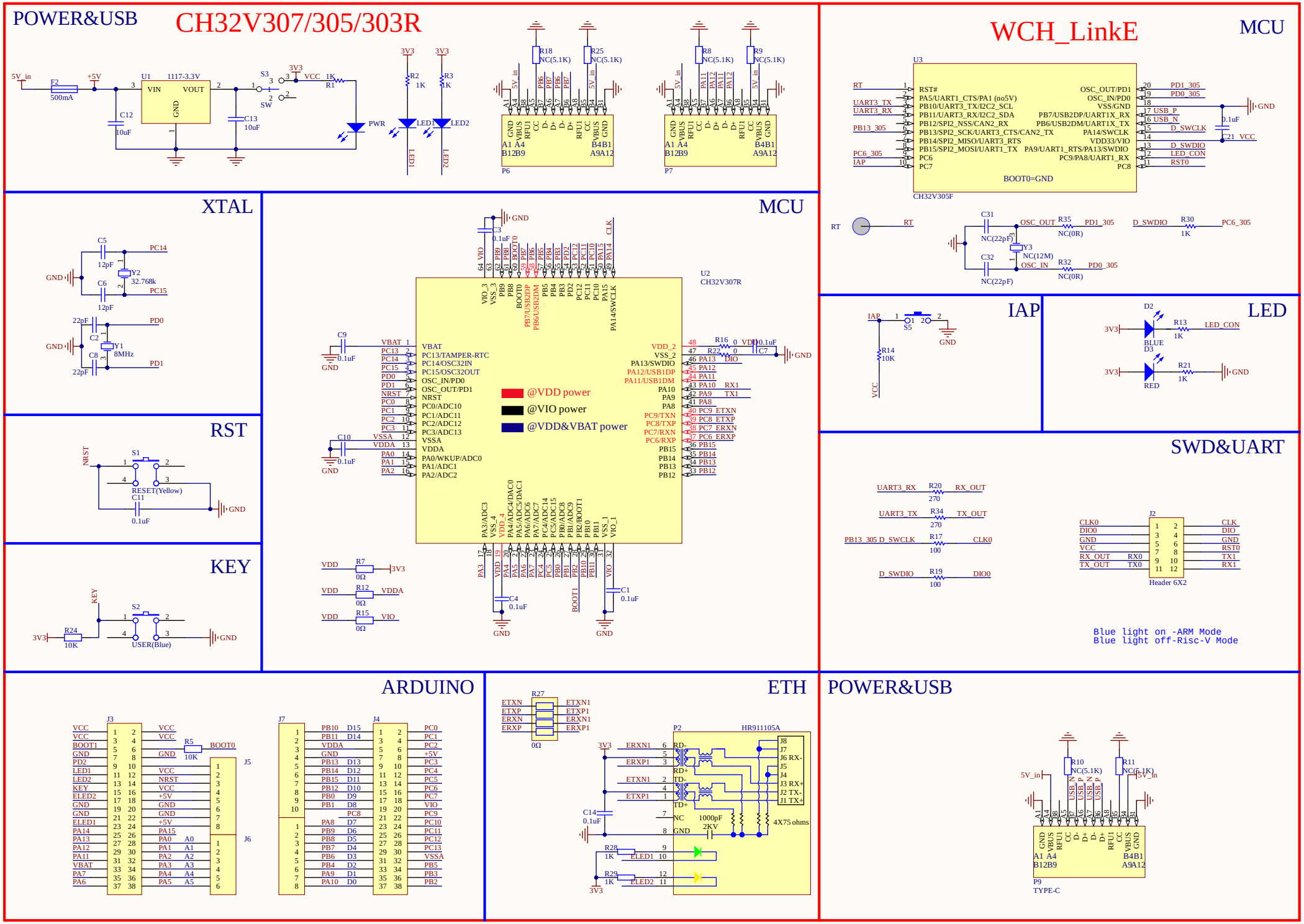
POWER&USB
CH32V307/305/303R
WCH_LinkE
MCU
XTAL
MCU
IAP
LED
RST
SWD&UART
KEY
ARDUINO
ETH
POWER&USB
@VDD power
@VIO power
@VDD&VBAT power
Blue light on -ARM Mode
Blue light off-Risc-V Mode

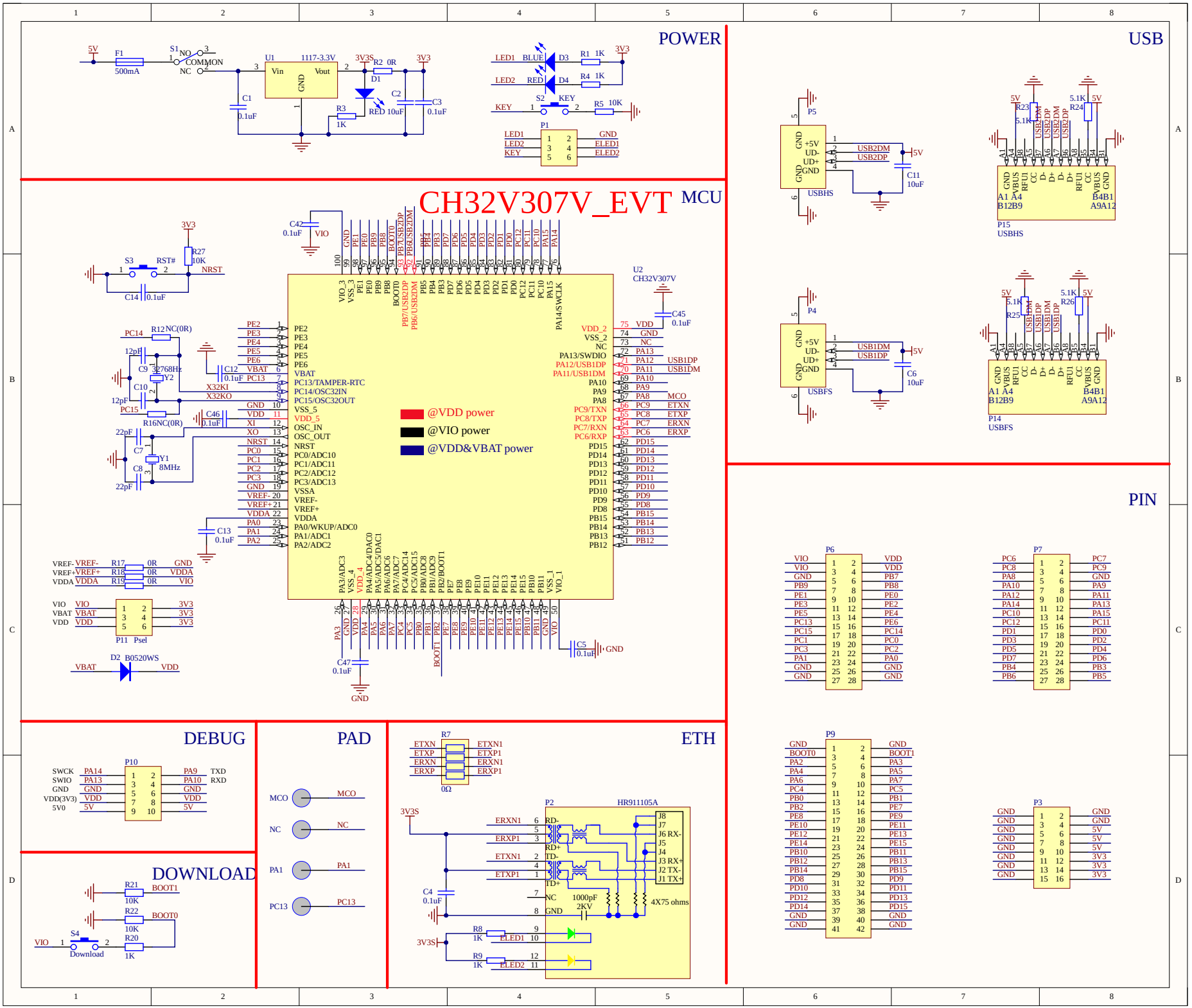
POWER
5V
F1
500mA
S1
NO
COMMON
NC
U1
1117-3.3V
Vin
Vout
GND
3V3S
R2 0R
D1
RED
C1
0.1uF
C2
10uF
C3
0.1uF
R3
1K
3V3
LED1
BLUE
D3
R1 1K
LED2
RED
D4
R4 1K
S2
KEY
R5 10K
P1
GND
ELED1
ELED2
USB
P5
USBHS
USB2DM
USB2DP
C11
10uF
R23
5.1K
R24
5.1K
P15
USBHS
A1 A4
B12B9
B4B1
A9A12
P4
USBFS
USB1DM
USB1DP
C6
10uF
R25
5.1K
R26
5.1K
P14
USBFS
CH32V307V_EVT
MCU
U2
CH32V307V
C42
0.1uF
VIO
3V3
S3
RST#
R27
10K
NRST
C14
0.1uF
PC14
R12NC(0R)
12pF
C9
32768Hz
Y2
C10
12pF
PC15
R16NC(0R)
C12
0.1uF
X32KI
X32KO
C46
0.1uF
22pF
C7
Y1
8MHz
C8
22pF
C13
0.1uF
C45
0.1uF
@VDD power
@VIO power
@VDD&VBAT power
VREF-
VREF+
VDDA
R17 0R
R18 0R
R19 0R
GND
VDDA
VIO
VBAT
VDD
P11 Psel
3V3
D2 B0520WS
C47
0.1uF
C5
0.1uF
PIN
P6
P7
P9
P3
DEBUG
P10
SWCK
SWIO
GND
VDD(3V3)
5V0
PA14
PA13
PA9
PA10
TXD
RXD
DOWNLOAD
R21
10K
BOOT1
R22
10K
BOOT0
S4
Download
R20
1K
PAD
MCO
NC
PA1
PC13
ETH
R7
ETXN
ETXP
ERXN
ERXP
ETXN1
ETXP1
ERXN1
ERXP1
0Ω
P2
HR911105A
3V3S
RD-
RD+
TD-
TD+
NC
GND
1000pF
2KV
4X75 ohms
C4
0.1uF
R8
1K
ELED1
R9
1K
ELED2

CH32V307/CH32F207/CH32V303/CH32F203VC

POWER&USB

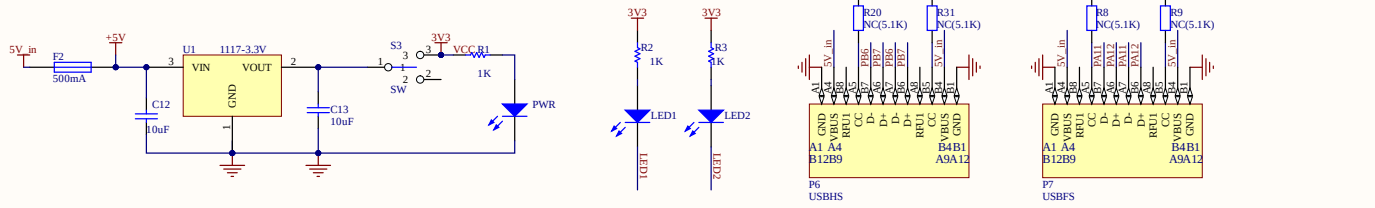

MCU

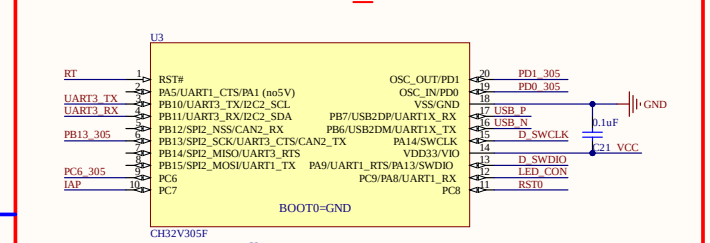

XTAL

MCU

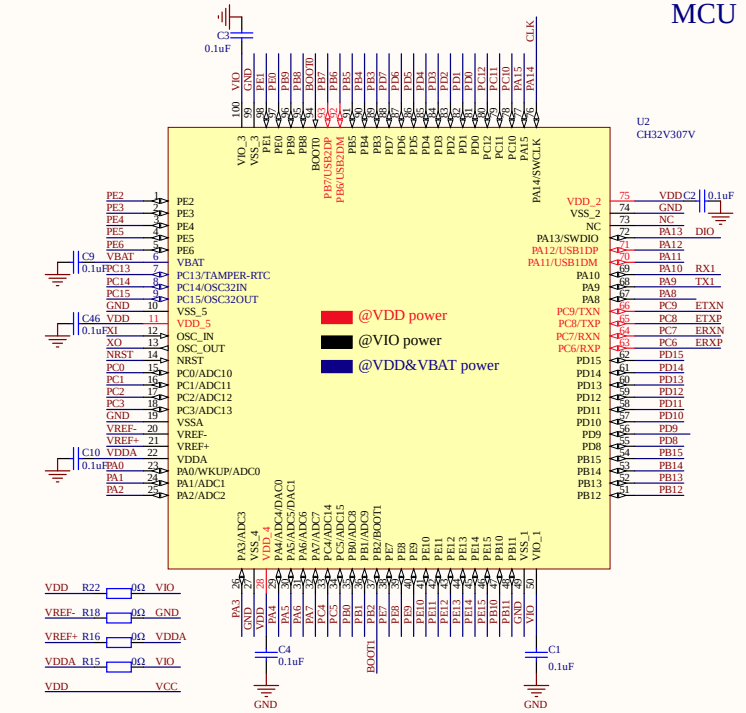

IAP

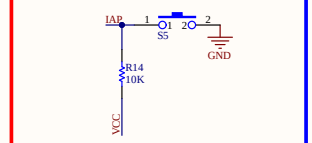

LED

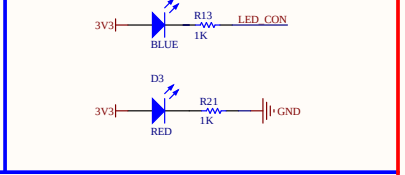

KEY

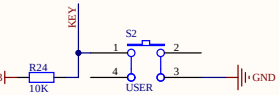

RST

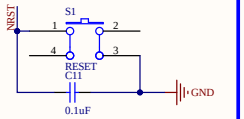

SWD&UART

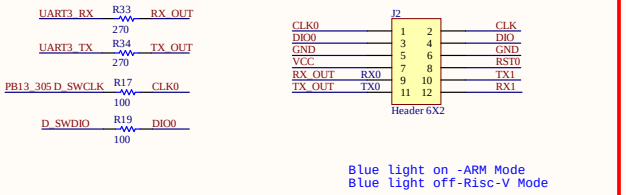

ARDUINO

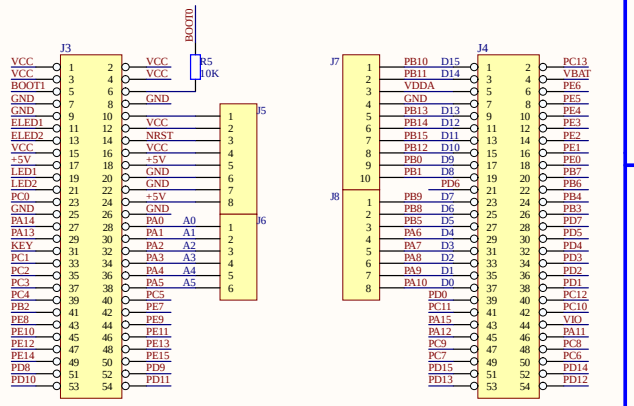

ETH

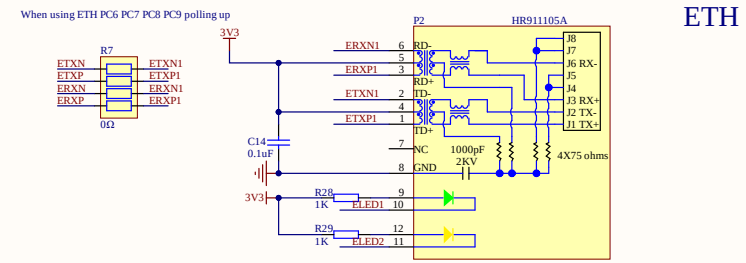

POWER&USB

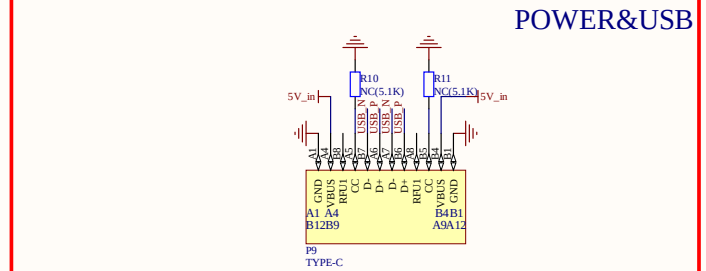

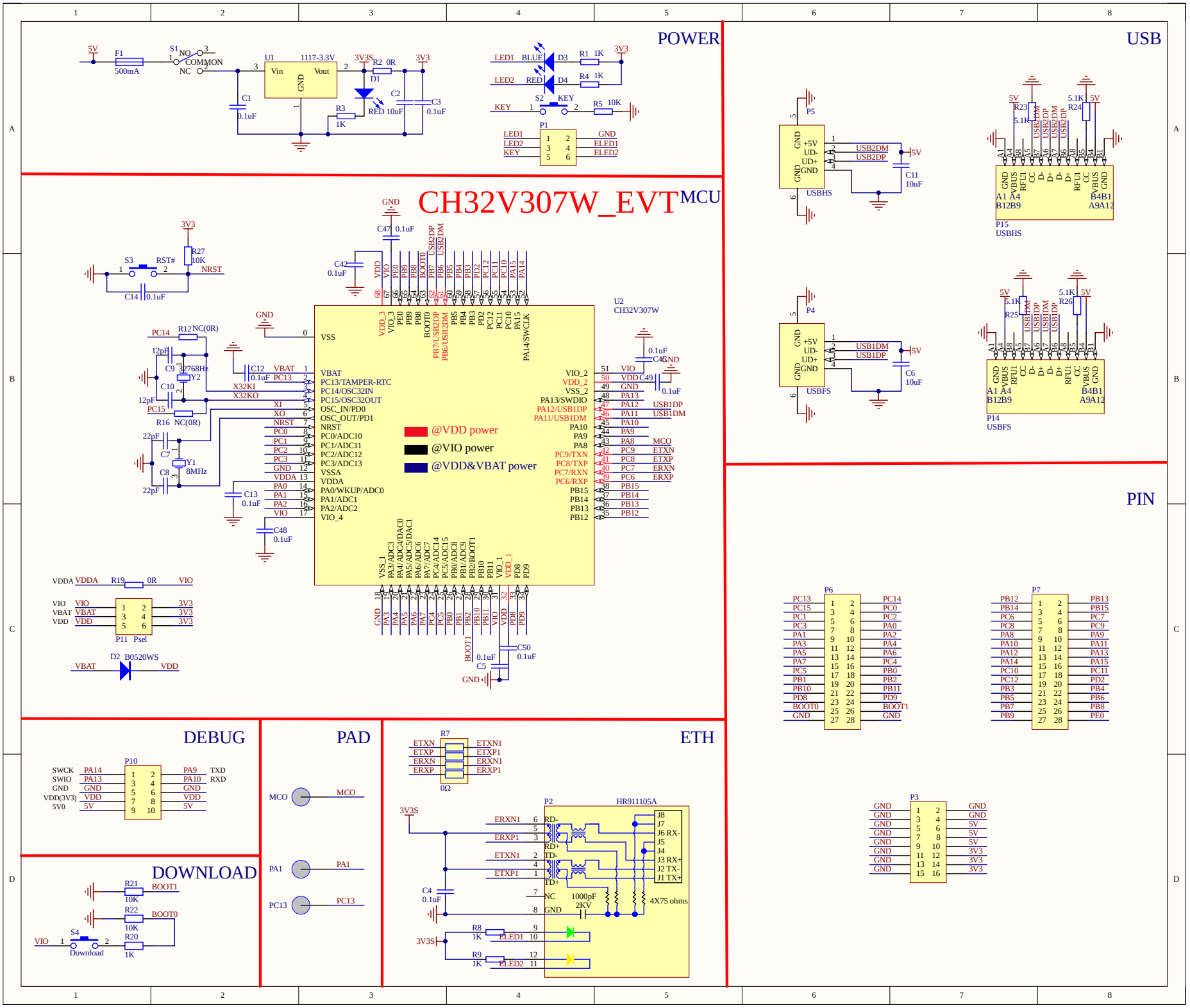
POWER
5V
F1
500mA
S1
NO
COMMON
NC
U1
1117-3.3V
Vin
Vout
GND
3V3S
R2 0R
3V3
D1
RED
C1
0.1uF
C2
10uF
C3
0.1uF
R3
1K
LED1 BLUE
D3
R1 1K
LED2 RED
D4
R4 1K
S2
KEY
R5 10K
P1
LED1
LED2
KEY
GND
ELED1
ELED2
USB
P5
USBHS
USB2DM
USB2DP
C11
10uF
5.1K
R23
R24
P15
USBHS
P4
USBFS
USB1DM
USB1DP
C6
10uF
R25
R26
P14
USBFS
CH32V307W_EVT
MCU
U2
CH32V307W
S3
RST#
NRST
R27
10K
C14
0.1uF
C47
0.1uF
C42
0.1uF
PC14
R12 NC(0R)
12pF
C9
32768Hz
Y2
C10
12pF
PC15
R16 NC(0R)
22pF
C7
Y1
8MHz
C8
22pF
C12
0.1uF
VBAT
PC13
X32KI
X32KO
XI
XO
C13
0.1uF
C48
0.1uF
VSS
VBAT
PC13/TAMPER-RTC
PC14/OSC32IN
PC15/OSC32OUT
OSC_IN/PD0
OSC_OUT/PD1
NRST
PC0/ADC10
PC1/ADC11
PC2/ADC12
PC3/ADC13
VSSA
VDDA
PA0/WKUP/ADC0
PA1/ADC1
PA2/ADC2
VIO_4
@VDD power
@VIO power
@VDD&VBAT power
VIO_2
VDD_2
VSS_2
PA13/SWDIO
PA12/USB1DP
PA11/USB1DM
PA10
PA9
PA8
PC9/TXN
PC8/TXP
PC7/RXN
PC6/RXP
PB15
PB14
PB13
PB12
C46
0.1uF
C49
0.1uF
MCO
ETXN
ETXP
ERXP
VDDA R19 0R VIO
P11 Psel
D2 B0520WS
C50
0.1uF
C5
0.1uF
PIN
P6
P7
P3
DEBUG
P10
SWCK PA14
SWIO PA13
GND
VDD(3V3)
5V0
TXD
RXD
DOWNLOAD
R21 10K BOOT1
R22 10K BOOT0
S4
Download
R20 1K
PAD
MCO
PA1
PC13
ETH
R7
0Ω
ETXN1
ETXP1
ERXN1
ERXP1
P2
HR911105A
3V3S
C4
0.1uF
R8 1K
R9 1K
ELED1
ELED2
1000pF
2KV
4X75 ohms

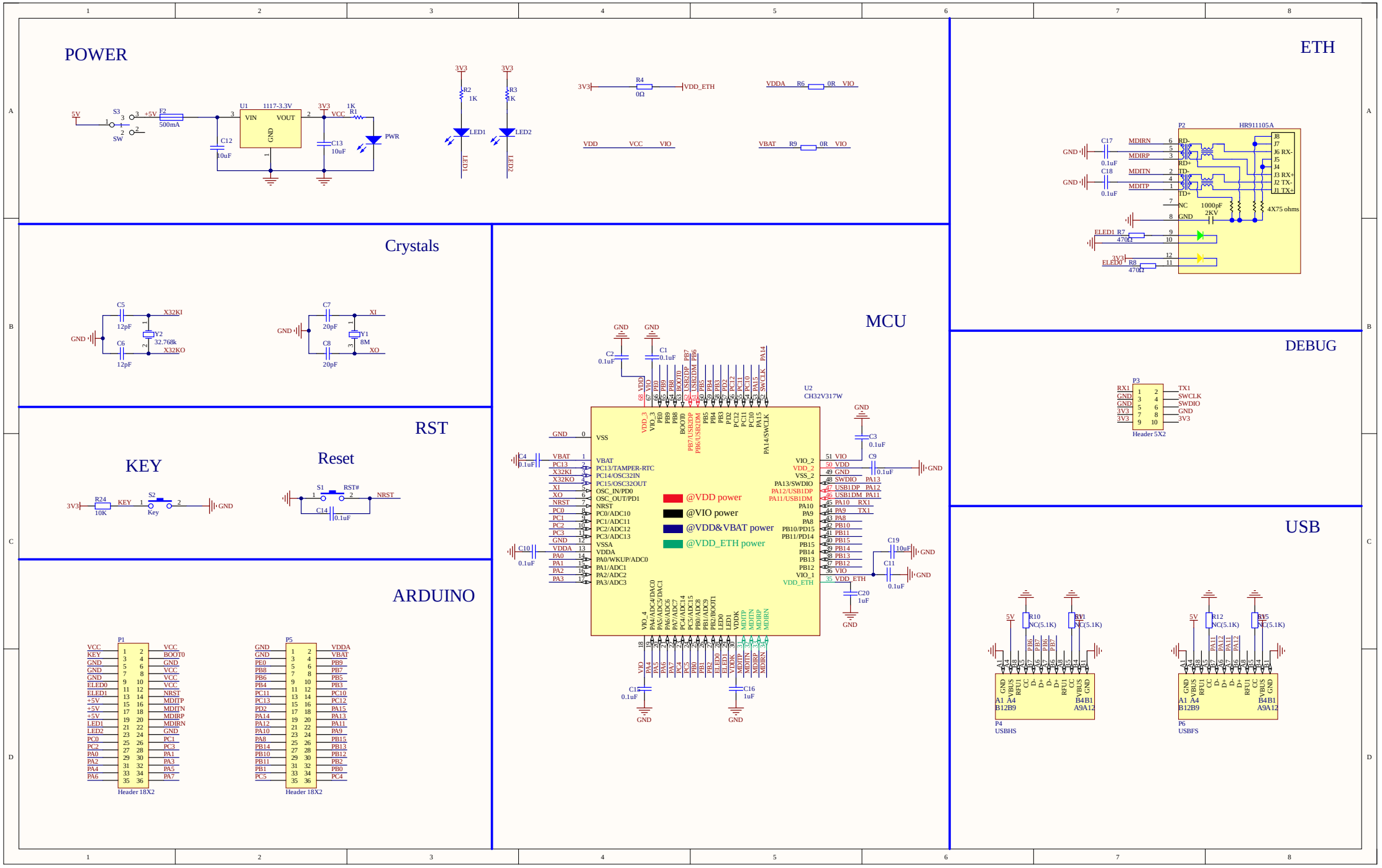
POWER
5V
S3
SW
+5V
F2
500mA
U1
1117-3.3V
VIN
VOUT
GND
C12
10uF
3V3
VCC
R1
1K
C13
10uF
PWR
R2
1K
R3
1K
LED1
LED2
R4
0Ω
VDD_ETH
VDDA
R6
0R
VIO
VDD
VCC
VIO
VBAT
R9
0R
VIO
ETH
P2
HR911105A
C17
0.1uF
C18
0.1uF
MDIRN
MDIRP
MDITN
MDITP
RD-
RD+
TD-
TD+
NC
GND
1000pF
2KV
4X75 ohms
ELED1
R7
470Ω
ELED0
R8
470Ω
Crystals
C5
12pF
X32KI
Y2
32.768k
C6
12pF
X32KO
C7
20pF
XI
Y1
8M
C8
20pF
XO
RST
KEY
R24
10K
KEY
S2
Key
Reset
S1
RST#
NRST
C14
0.1uF
MCU
U2
CH32V317W
C1
0.1uF
C2
0.1uF
C3
0.1uF
C4
0.1uF
C9
0.1uF
C10
0.1uF
C11
0.1uF
C19
10uF
C20
1uF
C15
0.1uF
C16
1uF
VSS
VBAT
PC13/TAMPER-RTC
PC14/OSC32IN
PC15/OSC32OUT
OSC_IN/PD0
OSC_OUT/PD1
NRST
PC0/ADC10
PC1/ADC11
PC2/ADC12
PC3/ADC13
VSSA
VDDA
PA0/WKUP/ADC0
PA1/ADC1
PA2/ADC2
PA3/ADC3
VIO_2
VDD_2
VSS_2
PA13/SWDIO
PA12/USB1DP
PA11/USB1DM
PA10
PA9
PA8
PB10/PD15
PB11/PD14
PB15
PB14
PB13
PB12
VIO_1
VDD_ETH
@VDD power
@VIO power
@VDD&VBAT power
@VDD_ETH power
DEBUG
P3
Header 5X2
TX1
SWCLK
SWDIO
GND
3V3
RX1
USB
R10
NC(5.1K)
R11
NC(5.1K)
P4
USBHS
R12
NC(5.1K)
R15
NC(5.1K)
P6
USBFS
ARDUINO
P1
Header 18X2
P5
Header 18X2