CH32X035/X033 Datasheet

V2.0

https://wch-ic.com

Overview

CH32X035 is an industrial-grade microcontroller based on the QingKe RISC-V core. CH32X035 has built-in USB and PD PHY, supports USB Host and USB Device functions, PDUSB and Type-C fast charging functions, built-in programmable protocol I/O controller, provides 2 groups of OPA, 3 groups of CMP, 4 groups of USART, I2C, SPI, multiple timers, 12-bit ADC, 14-channel touch-key and other rich peripheral resources.

Features

- **Core**
  - QingKe 32-bit RISC-V4C core
  - Support RV32IMAC instruction set and self-extending instructions
  - Fast programmable interrupt controller + hardware interrupt stack
  - Branch prediction, conflict handling mechanism
  - Single-cycle multiplication, hardware division
- **Memory**
  - 20KB volatile data storage area SRAM
  - 62KB program memory area CodeFlash
  - 256B system non-volatile configuration information memory area
  - 256B user-defined information storage area
- **Power management and low-power:**
  - System power supply V_{DD} rated voltage: 3.3V or 5V
  - Low power modes: Sleep, Stop, Standby
- **Clock & Reset**
  - Built-in 48MHz RC oscillator
  - Power on/down reset, programmable voltage detector
- **8-channel general-purpose DMA controller**
  - 8 channels, support ring buffer management
  - Support TIMx/ADC/USART/I2C/SPI
- **Programmable Protocol I/O Controller PIOC:**
  - Programmable, supports a wide range of 1-wire interfaces, 2-wire interfaces
- **2-group OPA/PGA/CMP:**
  - Multiple input channels, selectable multi-step gain
  - 2 output channels each, optional ADC pins
- **3-group analog voltage comparator CMP:**
  - 2 input channels each, optional common reference voltage pin
  - Output to I/O or internal direct trigger TIM2
- **12-bit ADC**
  - Analog input range: GND ~ V_{DD}
  - 14-channel external signal + 1-channel internal signal channel
- **14-channel touch-key detection**
- **Multiple timers**
  - 2×16-bit advanced-control timers, with dead zone control and emergency brake; can offer PWM complementary output for motor control
  - 1×16-bit general-purpose timers, provide input capture/output comparison/PWM
  - 2 watchdog timers (independent watchdog and window watchdog)
  - SysTick: 64-bit counter
- **4-group USART: Support LIN and ISO7816**
- **1×I2C interface**
- **1×SPI interface**
- **USB2.0 full-speed controller and PHY:**
  - Support USB Host and USB Device
- **USB PD and Type-C controller and PHY**
- **Fast GPIO port**
  - 60 I/O ports, with 24 external interrupts
- **Security features: Chip unique ID**
- **Debug mode: 2-wire serial debug interface (SDI)**
- **Package: LQFP, QFN, QSOP, TSSOP**

Model	Flash	RAM	GPIO	Advanced-control timer	General-purpose timer	Serial port	Watchdog	PDUSB			ADC	OPA	CMP	Capacitive Touchkey	SPI	PIOC 1-wire interface	Package form
								USB Host	USB Device	Type-C Source Sink DRP							
CH32X035R8T6	62K	20K	60	2	1	4	2	√	√	√	14+1	2	3	14	√	√	LQFP64M
CH32X035C8T6	62K	20K	46	2	1	4	2	√	√	√	10+1	2	3	10	√	√	LQFP48
CH32X035G8U6	62K	20K	27	2	1	4	2	√	√	√	12+1	2	1	12	√	√	QFN28
CH32X035G8R6	62K	20K	26	2	1	4	2	√	√	√	11+1	2	3	11	√	√	QSOP28
CH32X035F8U6	62K	20K	19	2	1	3	2	-	√	√	10+1	2	-	10	√	√	QFN20
CH32X035F7P6	62K	20K	18	2	1	3	2	-	√	√	11+1	1	1	11	√	√	TSSOP20
CH32X033F8P6	62K	20K	18	2	1	4	2	-	√	-	10+1	2	2	10	√	√	TSSOP20

Chapter 1 Specification Information

1.1 System Structure

The microcontroller is designed on the basis of the RISC-V instruction set, and its architecture integrates the barley microprocessor core, arbitration unit, DMA module, SRAM storage and other components through multiple bus groups to achieve interaction. A general-purpose DMA controller is integrated to reduce the CPU load and improve access efficiency, and a multi-level clock management mechanism is applied to reduce the power consumption of peripherals. The following diagram shows the overall internal architecture of the series chip.

Figure 1-1 System Block Diagram

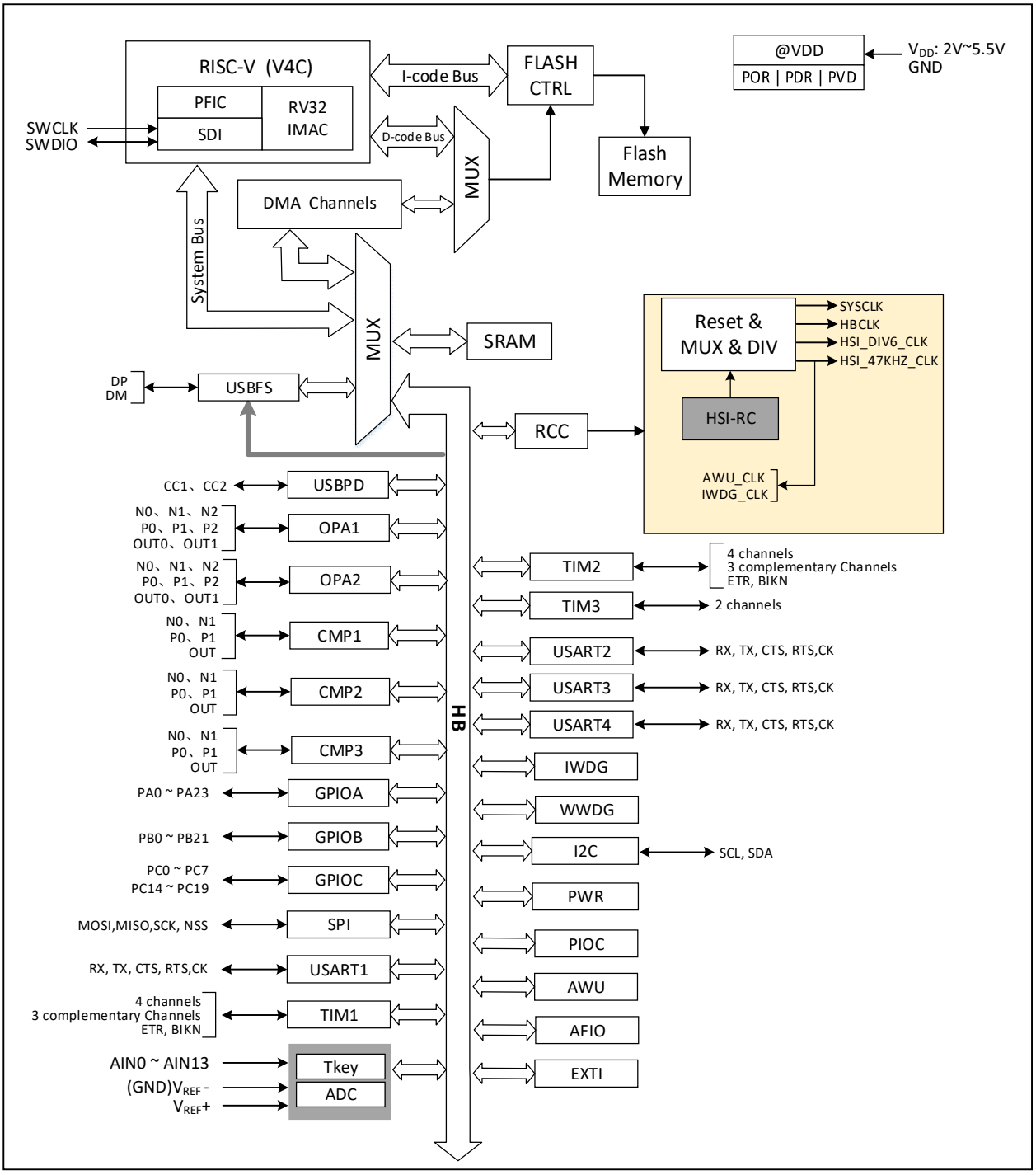

1.2 Memory Map

Figure 1-2 Memory address map

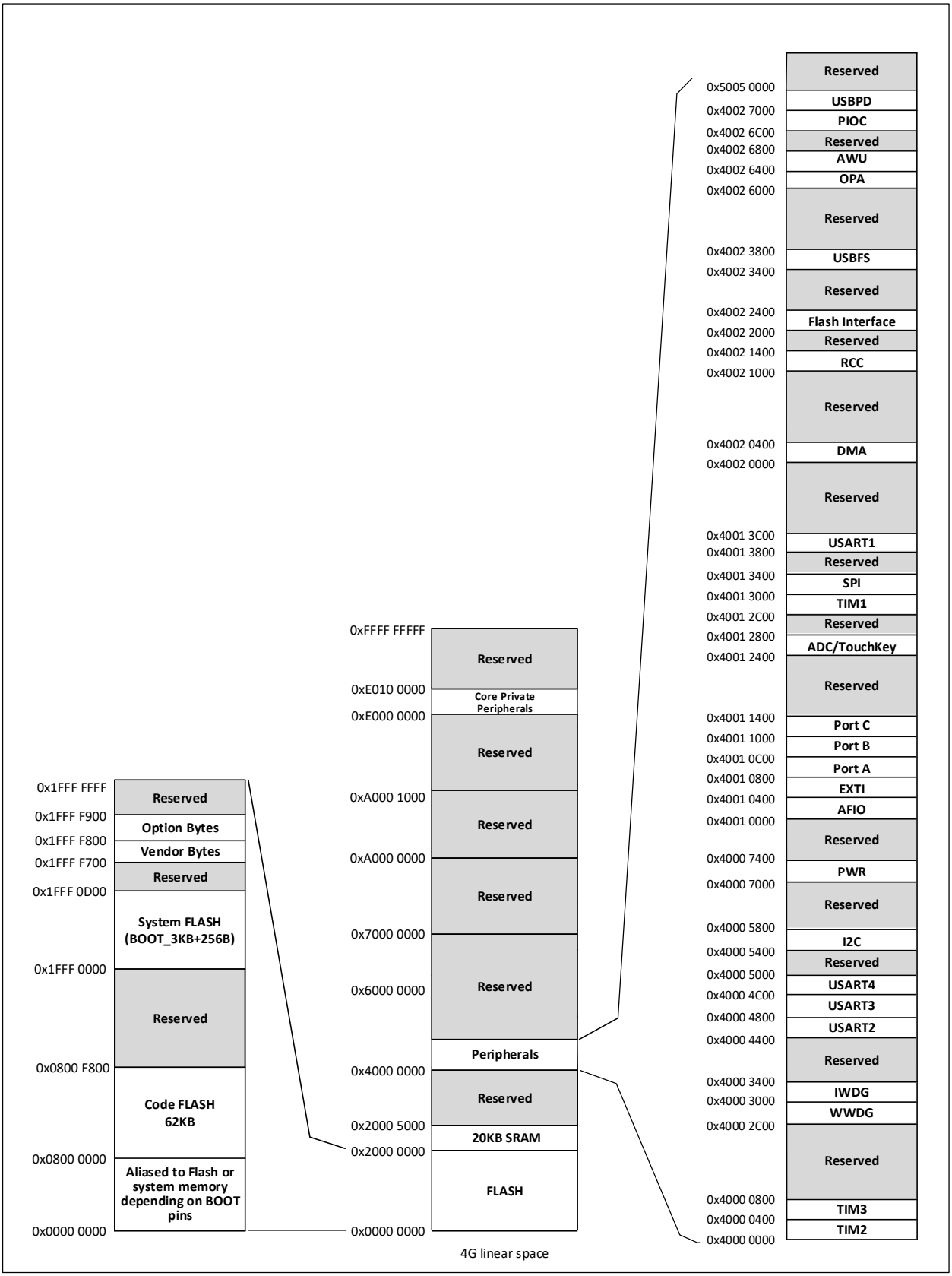

1.3 Clock Tree

System clock source: Internal high frequency RC oscillator (HSI)

Figure 1-3 Clock Tree Block Diagram

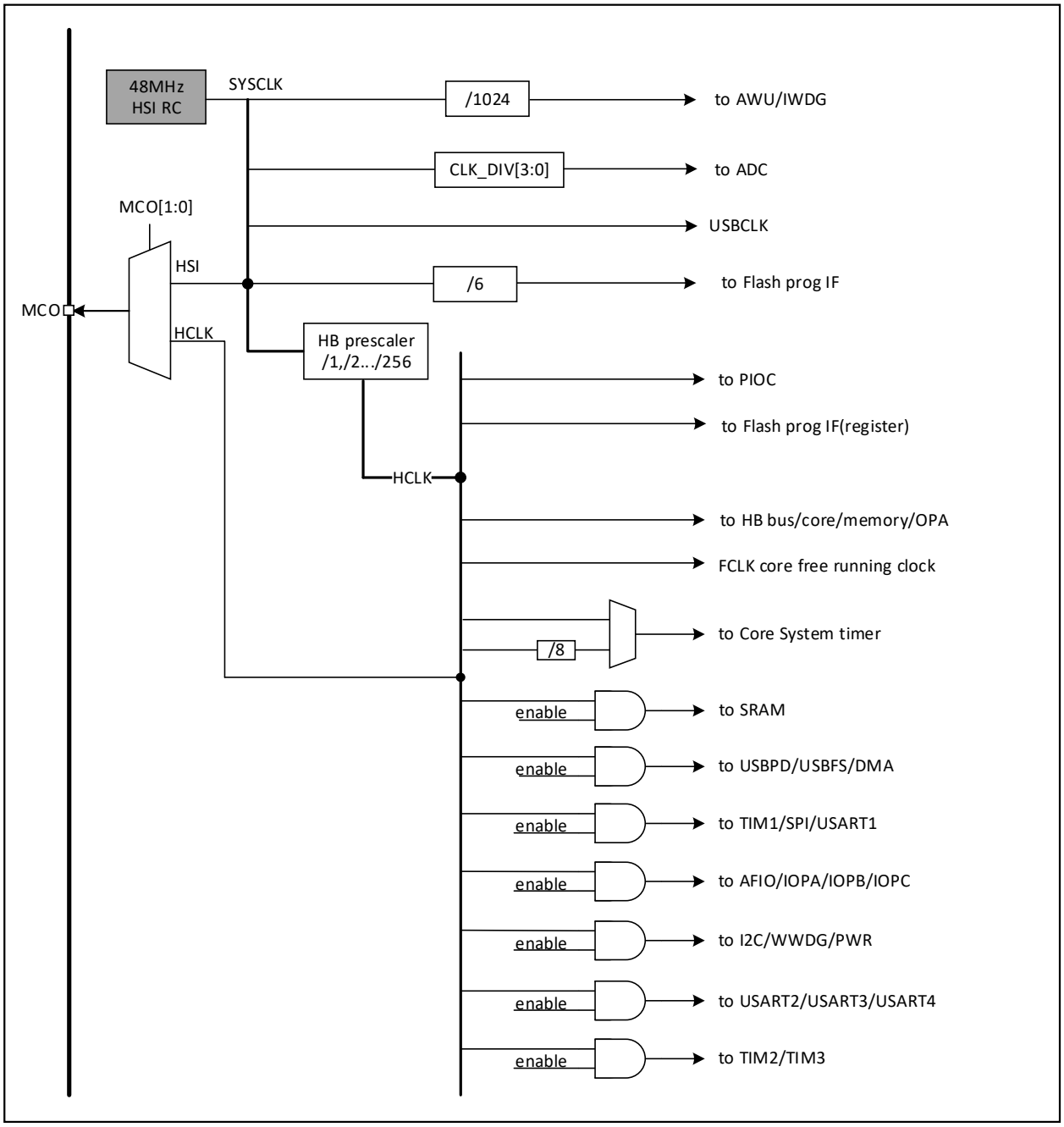

1.4 Functional Description

1.4.1 RISC-V4C Processor

RISC-V4C supports the IMAC subset of the RISC-V instruction set. The processor is managed internally in a modular fashion and contains units such as a programmable fast interrupt controller (PFIC), memory protection, branch prediction mode and extended instruction support. Externally multiple buses are connected to external unit modules, enabling interaction between external function modules and the core.

The processor with its minimal instruction set, multiple operating modes, and modular custom extensions can be flexibly applied to different scenarios of microcontroller design, such as small area low-power embedded scenarios, high performance application operating system scenarios, etc.

- Support machine and user privileged modes
- Programmable Fast Interrupt Controller (PFIC)
- Multi-level hardware interrupt stack
- 2-wire serial debug interface (SDI)
- Standard memory protection design
- Static or dynamic branch prediction, efficient jumping, conflict detection mechanisms
- Custom extension instructions

1.4.2 Programmable Protocol I/O Controller (PIOC)

Programmable protocol I/O controller is based on a single clock cycle dedicated compact instruction set RISC core running at system mains frequency with 2K instruction program ROM and 49 SFR registers and PWM timer/counter, supporting protocol control of 2 I/O pins.

- Multiplex 4K bytes of system SRAM as a 2K word capacity program ROM, supporting program pause and dynamic loading.
- Provide 33 bytes of 1 register each in bidirectional and unidirectional mode, providing 6 levels of independent stacking.
- Support 1- and 2-wire interfaces with multiple protocol specifications by dynamically loading different protocol programs.

1.4.3 On-chip Memory

Built-in 20K bytes SRAM area for data storage and data loss after power down. Among them, 4K can be used for PIOC.

Built-in 62K bytes program flash memory storage area (Code FLASH), i.e. user area, for user's application program and constant data storage.

Built-in 3328 bytes system storage area (System FLASH), i.e. BOOT area, for system boot program storage, built-in bootstrap loading program. This region can be used for the user area together with the aforementioned 62K-byte region via the WCH-LinkUtility tool. For details, refer to the relevant EVT.

256-byte system non-volatile configuration information storage area, used for vendor configuration word storage, factory-cured, user cannot be modified.

256-byte user-defined information storage area for user-selected word storage.

1.4.4 Power Supply Scheme

V_{DD} = 2 ~ 5.5V: supplies power to the I/O pins and internal regulator. (When using the ADC or PD, V_{DD} should be no less than 2.5V.)

1.4.5 Power Supply Monitor

A power-on reset (POR)/power-down reset (PDR) circuit is integrated inside the chip, which is always active to ensure that the system operates when the power supply exceeds 2V; when V_{DD} is below the set threshold ($V_{POR/PDR}$), it puts the device in reset without the need to use external reset circuitry.

In addition, the system has a programmable voltage monitor (PVD), which needs to be turned on by software, to compare the voltage magnitude of the V_{DD} supply with the set threshold V_{PVD}. Turning on the corresponding edge interrupt of the PVD allows you to receive an interrupt notification when V_{DD} falls to the PVD threshold or rises to the PVD threshold. Refer to Chapter 3 for $V_{POR/PDR}$ and V_{PVD} values.

1.4.6 System Voltage Regulator LDO

After resetting, the system voltage regulator is automatically switched on. There are two modes of operation depending on the application mode.

- On mode: normal running operation, providing stable core power.
- Low-power mode: low-power operation of the regulator when the CPU is in Standby mode.

1.4.7 Low-power Mode

The system supports three low-power modes, which can be selected to achieve the best balance for conditions such as low-power consumption, short start-up times and multiple wake-up events.

- Sleep mode

In Sleep mode, only the CPU clock is stopped, but all peripheral clocks are powered normally and the peripherals are in working condition. This mode is the shallowest low-power mode, but the fastest wake-up can be achieved.

Exit condition: any interrupt or wake-up event.

- Stop mode

This mode puts the FLASH into low-power mode and the RC oscillator of the HSI is switched off.

Exit conditions: any external interrupt/event (EXTI signal), external reset signal on RST, IWDG reset, where EXTI signal includes one of the 24 external I/O ports, output of PVD, wake-up signal of USB, wake-up signal of USB PD, etc.

- Standby mode

This mode FLASH enters low-power mode, the RC oscillator of HSI is switched off and the system LDO enters low-power mode.

Exit conditions: any external interrupt/event (EXTI signal), external reset signal on RST, IWDG reset, where the EXTI signal includes one of the 24 external I/O ports, the output of PVD, the wake-up signal of USB, the wake-up signal of USB PD, etc.

1.4.8 Programmable Fast Interrupt Controller (PFIC)

The chip has a built-in Programmable Fast Interrupt Controller (PFIC) that supports up to 255 interrupt vectors, providing flexible interrupt management with minimal interrupt latency. Currently the chip manages 7 core private interrupts and 39 peripheral interrupt management, with other interrupt sources reserved. the PFIC registers are all accessible in both user and machine privileged modes.

- 2 individually maskable interrupts
- Provide one non-maskable interrupt NMI
- Support Hardware Prologue/Epilogue (HPE) without instruction overhead
- Provide 4 Vector Table Free (VTF) for faster access to interrupt service routines
- Vector table support address or instruction mode

- Interrupt nesting depth can be configured up to 2 levels
- Support interrupt tail linking

1.4.9 External Interrupt/Event Controller (EXTI)

The external interrupt/event controller contains a total of 28 edge detectors for generating interrupt/event requests. Each interrupt line can be configured independently of its trigger event (rising or falling edge or double edge) and can be individually masked; a pending register maintains the status of all interrupt requests. Up to 60 general purpose I/O ports are optionally connected to 24 external interrupt lines.

1.4.10 General DMA Controller

The system has a built-in general purpose DMA controller that manages 8 channels to flexibly handle high-speed data transfers between memory to memory, peripheral to memory and memory to peripheral, supporting the ring buffer approach. Each channel has dedicated hardware DMA request logic to support one or more peripheral access requests to memory, with configurable access priority, transfer length, source and destination addresses for transfers, etc.

DMA is used for the main peripherals including: General-purpose/advanced-control timers TIMx, ADC, USART, I2C, SPI.

USB and USB PD have additional dedicated independent DMA channels.

Note: DMA and CPU access to system SRAM after arbiter arbitration.

1.4.11 Clock and Boot

The system clock source HSI is turned on by default, and the internal 48MHz RC oscillator 6 division is used as the default CPU clock when no clock is configured or after a reset. For low power modes where the clock is turned off, the system will first turn on the internal RC oscillator upon wake-up. If the clock interrupt is enabled, the software can receive the corresponding interrupt.

1.4.12 Analog-to-digital Converter (ADC) and Touchkey Capacitance Detection (TKey)

The chip has an built-in 12-bit analog/digital converter (ADC) providing up to 14 external channels and 1 internal channel sample, with programmable channel sample times for single, continuous, sweep or intermittent conversion. The provision of an analogue watchdog function allows very accurate monitoring of one or more selected channels for monitoring channel signal voltages. Supports external event-triggered transitions, with trigger sources including internal signals from the on-chip timer and external pins. Supports the use of DMA operation.

ADC internal channels are internal reference supply voltage sampling channels.

Touch key capacitance detection unit, providing up to 14 detection channels, multiplexes the external channels of the ADC module. The detection results are converted to output results by the ADC module, and the touch key status is identified by the touch detection algorithm subroutine library or by user software.

Note: The channel 3, channel 7, channel 11 and channel 15 functions of the ADC are not available for products with a lot number with the penultimate 5 digits being 0.

1.4.13 Timer and Watchdog

- Advanced-control timer (TIM1, TIM2)

The Advanced Control Timer is a 16-bit auto-loading up/down counter with a 16-bit programmable prescaler. In addition to the full general-purpose timer functionality, it can be viewed as a three-phase PWM generator assigned to 6 channels, with a complementary PWM output functionality with dead-band insertion, allowing the timer to be

updated after a specified number of counter cycles for repeating Counting cycle, braking function, etc. Many functions of advanced control timers are the same as general timers, and the internal structure is also the same. Therefore, advanced control timers can cooperate with other TIM timers through the timer link function to provide synchronization or event link functions.

- General-purpose timer (TIM3)

The general-purpose timer is a 16-bit auto-loading recursive counter with a programmable 16-bit prescaler and 2 independent channels, each supporting input capture, output comparison, PWM generation and single pulse mode output. It can also work with advanced-control timers via the timer linking function to provide synchronous or event linking functionality. In debug mode, the counter can be frozen and any general-purpose timer can be used to generate PWM outputs.

- Independent watchdog

The Independent Watchdog is a free-running 12-bit decrementing counter supporting 7 division factors. The clock source is provided by the division of the (HSI/1024) clock. IWDG works completely independently of the main program and can therefore be used to reset the entire system in case of problems or as a free timer to provide timeout management for applications. With the option byte it can be configured to be a software or hardware start watchdog. In debug mode, the counter can be frozen.

- Window watchdog

Window watchdog is a 7-bit decrementing counter and can be set to run freely. It can be used to reset the entire system in the event of a problem. It is driven by the master clock and has an early warning interrupt function; in debug mode the counter can be frozen.

- SysTick timer

QingKe microprocessor core comes with a 64-bit optional incremental or decremental counter for generating SYSTICK exceptions (exception number: 12), which can be used exclusively in real time operating systems to provide a "heartbeat" rhythm for the system, or as a standard 64-bit counter. Automatic reload function and programmable clock source.

1.4.14 Universal Synchronous/Asynchronous Receiver Transmitter (USART)

The chip provides 4 sets of universal synchronous/asynchronous transceivers. It supports full duplex asynchronous serial communication, synchronous unidirectional communication as well as half duplex single line communication, also LIN (Local Interconnect Network), ISO7816 compatible smart card protocol and IrDA SIR ENDEC transmission codec specification, as well as modem (CTS/RTS hardware flow control) operation, and also supports multi-processor communication. It uses a fractional baud rate generator system and supports continuous communication by DMA operation.

1.4.15 Serial Peripheral Interface (SPI)

The chip provides 1 serial peripheral SPI interface, support master or slave operation, dynamic switching. Support multi-master mode, full-duplex or half-duplex synchronous transmission, support basic SD card and MMC mode. Programmable clock polarity and phase, data bit width provides 8 or 16-bit selection, hardware CRC generation/check for reliable communication, and continuous communication support for DMA operation.

1.4.16 I2C Bus

The chip provides one I2C bus interface, capable of working in multi-master or slave mode, performing all I2C bus specific timing, protocols, arbitration, etc. Both standard and fast communication speeds are supported.

The I2C interface provides 7-bit or 10-bit addressing, and supports dual slave addressing in 7-bit Slave mode. It integrates built-in hardware CRC generator/checker. It also supports DMA operation.

Note: I2C function is not available for products with a 0 in the penultimate 5 digits of the lot number.

1.4.17 Universal Serial Bus USB2.0 Full-speed Host/Device Controller (USBFS)

USB2.0 Full-speed Host Controller and Device Controller (USBFS) following the USB2.0 Full-speed standard and supporting the BC charging protocol. Provides 8 configurable USB device endpoints and a set of host endpoints. Supports control/lot/sync/interrupt transfers, double buffer mechanism, USB bus hang/resume operation and provides standby/wakeup functions. 48MHz clock dedicated to the USBFS module is generated directly from the internal high-speed clock (HSI).

1.4.18 USB PD and Type-C Controller (USB PD)

Built-in USB Power Delivery controller and PD transceiver PHY, support USB Type-C master-slave detection, automatic BMC codec and CRC, hardware edge control, support USB PD2.0 and PD3.0 power delivery control, support fast charging, support UFP/PD powered end Sink and DFP/PD powered end Source applications and DRP applications, supports PDUSB.

The CH211 Type-C/PD high-voltage interface chip additionally enables 28V direct power supply, internal boost pump control of N-channel MOSFETs, 28V withstand voltage on the CC pin, and an integrated 5KΩ controlled pull-down resistor compliant with Type-C specifications.

1.4.19 General-purpose Input and Output (GPIO)

The system provides 3 groups of GPIO ports with a total of 60 GPIO pins. Each pin can be configured by software as an output, input (with or without pull-up, some pins support pull-down) or multiplexed peripheral function port. All GPIO pins support controlled pull-up, only PA0-PA15 and PC16-PC17 support controlled pull-down, the remaining pins do not support pull-down. PC14-PC17 support multiple pull-up modes, set by dedicated control registers corresponding to the PD and USB pins respectively.

Most GPIO pins are shared with either digital or analogue multiplexed peripherals. All PA and PB GPIO pins have high current drive capability with simple constant current functionality and all support PWM. a lockout mechanism is provided to freeze the I/O configuration to avoid accidental writes to I/O registers.

Most of the I/O pins in the system are powered by V_{DD}, and changing the V_{DD} power supply will change the I/O pin output level high enough to adapt to the external communication interface level. Please refer to the pin description for specific pins.

1.4.20 Operational Amplifier/Comparator (OPA)

The chip has a built-in 2-group op-amp (OPA), which can also be used as a voltage comparator. Its input can be selected for multiple channels by changing the configuration, including amplification selection for the programmable gain op-amp (PGA), and its output can be selected for 2 channels by changing the configuration, internally associated to ADC channels. External analogue small signal amplification is supported for feeding into the ADC for small signal ADC conversion.

1.4.21 Voltage Comparator (CMP)

The chip has 3 built-in rail-to-rail analog voltage comparators with optional hysteresis characteristics. The voltage

comparison results are triggered by the GPIO output or internally directly into the input channels CH1 ~ CH3 of the TIM2.

1.4.22 2-wire SDI Serial Debug Interface

The core comes with a 2-wire serial debug interface (SDI) including the SWDIO and SWCLK pins. The default debug interface pin function is turned on after system power-up or reset, and the SDI can be turned off as required after the main program is running.

Chapter 2 Pinouts and Pin Definition

2.1 Pinouts

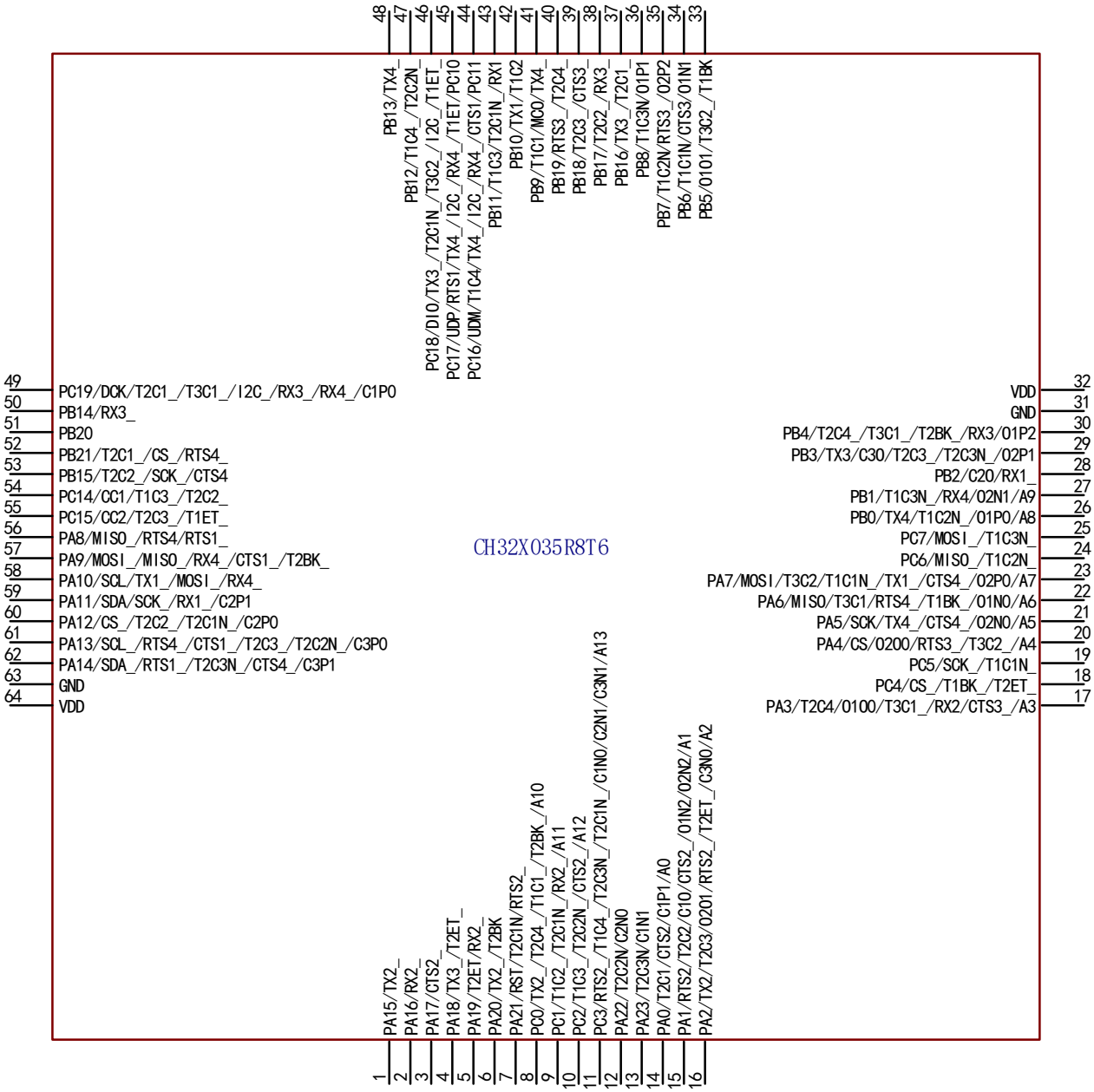

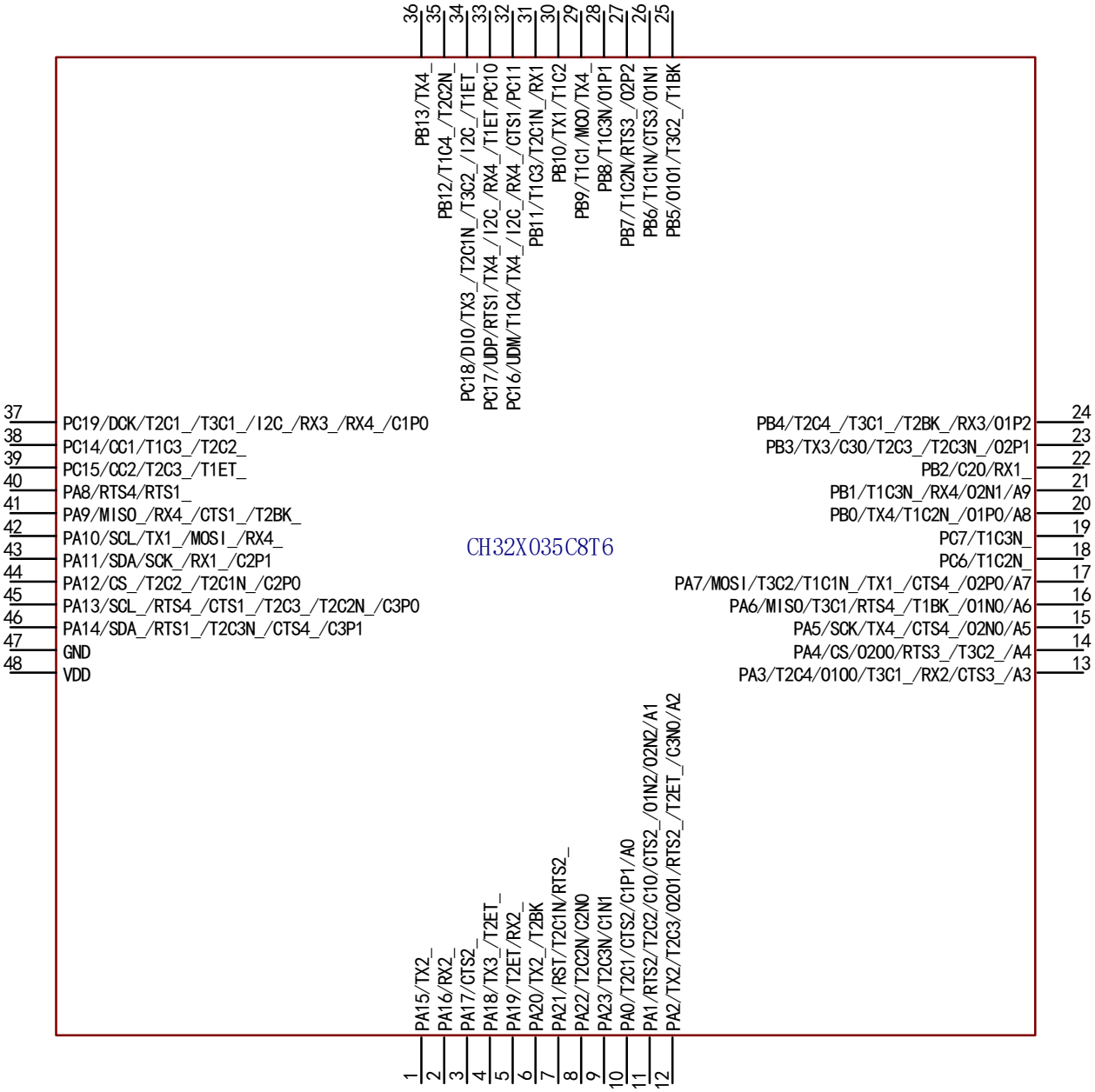
36 PB13/TX4_
35 PB12/T1C4_/T2C2N_
34 PC18/DIO/TX3_/T2C1N_/T3C2_/I2C_/T1ET_
33 PC17/UDP/RTS1/TX4_/I2C_/RX4_/T1ET/PC10
32 PC16/UDM/T1C4/TX4_/I2C_/RX4_/CTS1/PC11
31 PB11/T1C3/T2C1N_/RX1
30 PB10/TX1/T1C2
29 PB9/T1C1/MCO/TX4_
28 PB8/T1C3N/O1P1
27 PB7/T1C2N/RTS3_/O2P2
26 PB6/T1C1N/CTS3/O1N1
25 PB5/O1O1/T3C2_/T1BK
37 PC19/DCK/T2C1_/T3C1_/I2C_/RX3_/RX4_/C1P0
38 PC14/CC1/T1C3_/T2C2_
39 PC15/CC2/T2C3_/T1ET_
40 PA8/RTS4/RTS1_
41 PA9/MISO_/RX4_/CTS1_/T2BK_
42 PA10/SCL/TX1_/MOSI_/RX4_
43 PA11/SDA/SCK_/RX1_/C2P1
44 PA12/CS_/T2C2_/T2C1N_/C2P0
45 PA13/SCL_/RTS4_/CTS1_/T2C3_/T2C2N_/C3P0
46 PA14/SDA_/RTS1_/T2C3N_/CTS4_/C3P1
47 GND
48 VDD
CH32X035C8T6
24 PB4/T2C4_/T3C1_/T2BK_/RX3/O1P2
23 PB3/TX3/C3O/T2C3_/T2C3N_/O2P1
22 PB2/C2O/RX1_
21 PB1/T1C3N_/RX4/O2N1/A9
20 PB0/TX4/T1C2N_/O1P0/A8
19 PC7/T1C3N_
18 PC6/T1C2N_
17 PA7/MOSI/T3C2/T1C1N_/TX1_/CTS4_/O2P0/A7
16 PA6/MISO/T3C1/RTS4_/T1BK_/O1N0/A6
15 PA5/SCK/TX4_/CTS4_/O2N0/A5
14 PA4/CS/O2O0/RTS3_/T3C2_/A4
13 PA3/T2C4/O1O0/T3C1_/RX2/CTS3_/A3
1 PA15/TX2_
2 PA16/RX2_
3 PA17/CTS2_
4 PA18/TX3_/T2ET_
5 PA19/T2ET/RX2_
6 PA20/TX2_/T2BK
7 PA21/RST/T2C1N/RTS2_
8 PA22/T2C2N/C2N0
9 PA23/T2C3N/C1N1
10 PA0/T2C1/CTS2/C1P1/A0
11 PA1/RTS2/T2C2/C1O/CTS2_/O1N2/O2N2/A1
12 PA2/TX2/T2C3/O2O1/RTS2_/T2ET_/C3N0/A2

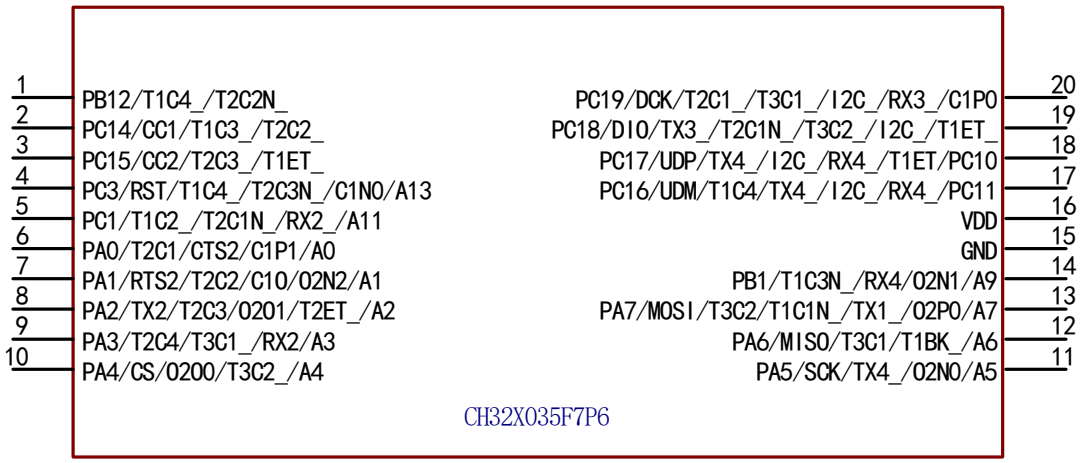
1 PB12/T1C4_/T2C2N_
2 PC14/CC1/T1C3_/T2C2_
3 PC15/CC2/T2C3_/T1ET_
4 PC3/RST/T1C4_/T2C3N_/C1N0/A13
5 PC1/T1C2_/T2C1N_/RX2_/A11
6 PA0/T2C1/CTS2/C1P1/A0
7 PA1/RTS2/T2C2/C1O/O2N2/A1
8 PA2/TX2/T2C3/O2O1/T2ET_/A2
9 PA3/T2C4/T3C1_/RX2/A3
10 PA4/CS/O2O0/T3C2_/A4
CH32X035F7P6
20 PC19/DCK/T2C1_/T3C1_/I2C_/RX3_/C1P0
19 PC18/DIO/TX3_/T2C1N_/T3C2_/I2C_/T1ET_
18 PC17/UDP/TX4_/I2C_/RX4_/T1ET/PC10
17 PC16/UDM/T1C4/TX4_/I2C_/RX4_/PC11
16 VDD
15 GND
14 PB1/T1C3N_/RX4/O2N1/A9
13 PA7/MOSI/T3C2/T1C1N_/TX1_/O2P0/A7
12 PA6/MISO/T3C1/T1BK_/A6
11 PA5/SCK/TX4_/O2N0/A5

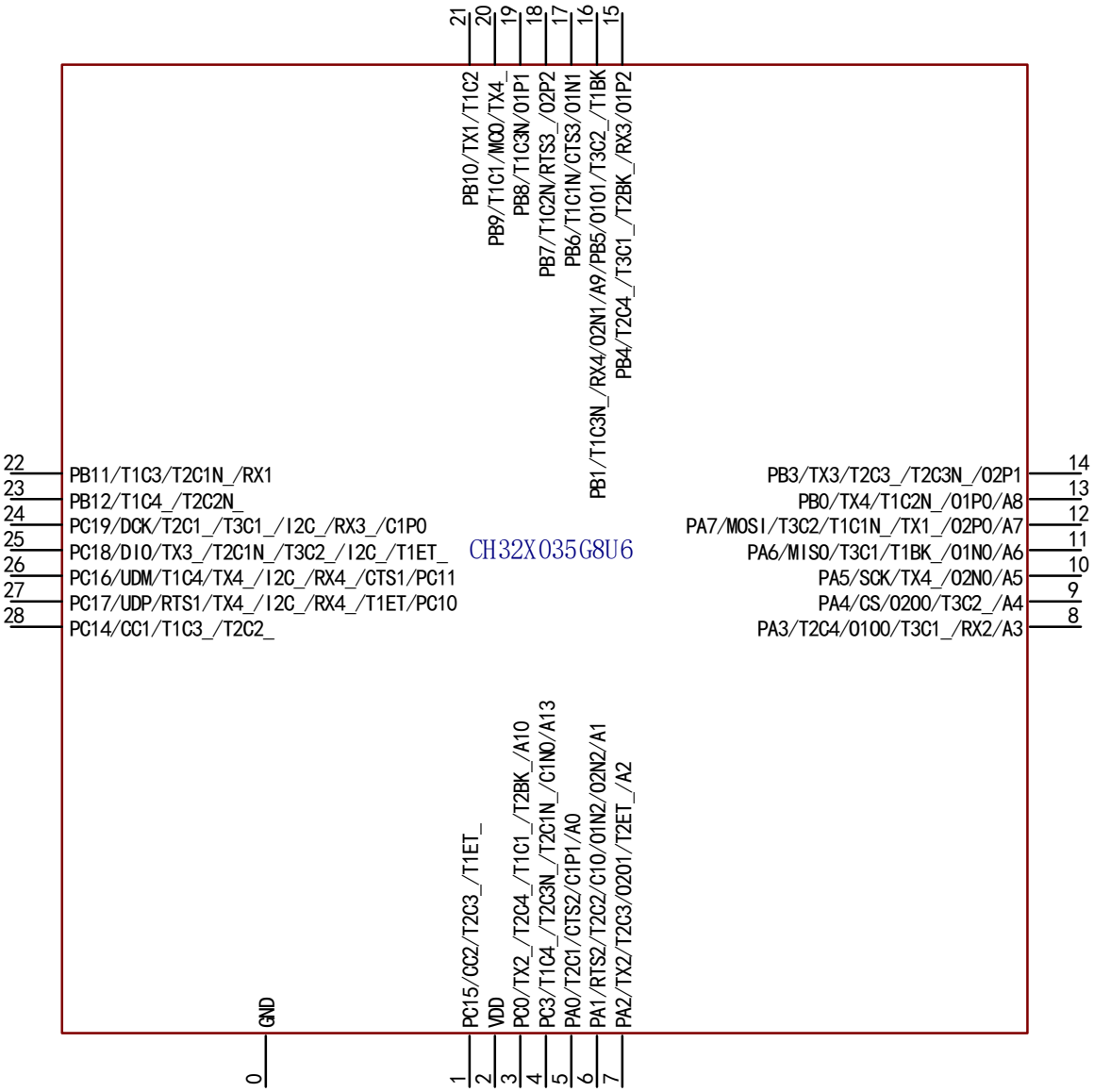
21 PB10/TX1/T1C2
20 PB9/T1C1/MCO/TX4_
19 PB8/T1C3N/O1P1
18 PB7/T1C2N/RTS3_/O2P2
17 PB6/T1C1N/CTS3/O1N1
16 PB1/T1C3N_/RX4/O2N1/A9/PB5/O1O1/T3C2_/T1BK
15 PB4/T2C4_/T3C1_/T2BK_/RX3/O1P2
22 PB11/T1C3/T2C1N_/RX1
23 PB12/T1C4_/T2C2N_
24 PC19/DCK/T2C1_/T3C1_/I2C_/RX3_/C1P0
25 PC18/DIO/TX3_/T2C1N_/T3C2_/I2C_/T1ET_
26 PC16/UDM/T1C4/TX4_/I2C_/RX4_/CTS1/PC11
27 PC17/UDP/RTS1/TX4_/I2C_/RX4_/T1ET/PC10
28 PC14/CC1/T1C3_/T2C2_
CH32X035G8U6
14 PB3/TX3/T2C3_/T2C3N_/O2P1
13 PB0/TX4/T1C2N_/O1P0/A8
12 PA7/MOSI/T3C2/T1C1N_/TX1_/O2P0/A7
11 PA6/MISO/T3C1/T1BK_/O1N0/A6
10 PA5/SCK/TX4_/O2N0/A5
9 PA4/CS/O2O0/T3C2_/A4
8 PA3/T2C4/O1O0/T3C1_/RX2/A3
0 GND
1 PC15/CC2/T2C3_/T1ET_
2 VDD
3 PC0/TX2_/T2C4_/T1C1_/T2BK_/A10
4 PC3/T1C4_/T2C3N_/T2C1N_/C1N0/A13
5 PA0/T2C1/CTS2/C1P1/A0
6 PA1/RTS2/T2C2/C1O/O1N2/O2N2/A1
7 PA2/TX2/T2C3/O2O1/T2ET_/A2

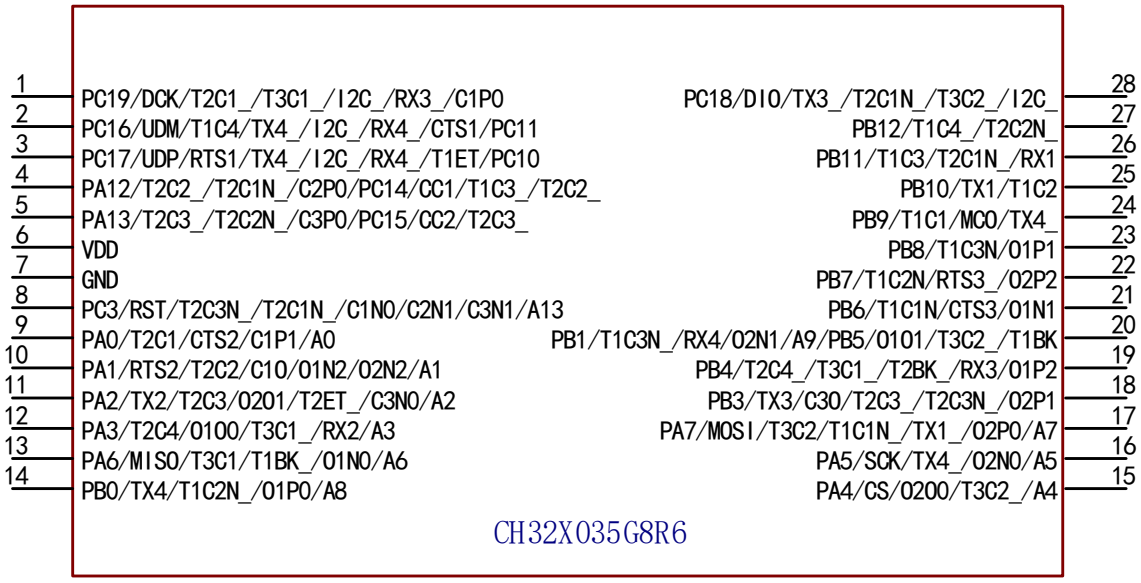
1 PC19/DCK/T2C1_/T3C1_/I2C_/RX3_/C1P0
2 PC16/UDM/T1C4/TX4_/I2C_/RX4_/CTS1/PC11
3 PC17/UDP/RTS1/TX4_/I2C_/RX4_/T1ET/PC10
4 PA12/T2C2_/T2C1N_/C2P0/PC14/CC1/T1C3_/T2C2_
5 PA13/T2C3_/T2C2N_/C3P0/PC15/CC2/T2C3_
6 VDD
7 GND
8 PC3/RST/T2C3N_/T2C1N_/C1N0/C2N1/C3N1/A13
9 PA0/T2C1/CTS2/C1P1/A0
10 PA1/RTS2/T2C2/C1O/O1N2/O2N2/A1
11 PA2/TX2/T2C3/O2O1/T2ET_/C3N0/A2
12 PA3/T2C4/O1O0/T3C1_/RX2/A3
13 PA6/MISO/T3C1/T1BK_/O1N0/A6
14 PB0/TX4/T1C2N_/O1P0/A8
28 PC18/DIO/TX3_/T2C1N_/T3C2_/I2C_
27 PB12/T1C4_/T2C2N_
26 PB11/T1C3/T2C1N_/RX1
25 PB10/TX1/T1C2
24 PB9/T1C1/MCO/TX4_
23 PB8/T1C3N/O1P1
22 PB7/T1C2N/RTS3_/O2P2
21 PB6/T1C1N/CTS3/O1N1
20 PB1/T1C3N_/RX4/O2N1/A9/PB5/O1O1/T3C2_/T1BK
19 PB4/T2C4_/T3C1_/T2BK_/RX3/O1P2
18 PB3/TX3/C3O/T2C3_/T2C3N_/O2P1
17 PA7/MOSI/T3C2/T1C1N_/TX1_/O2P0/A7
16 PA5/SCK/TX4_/O2N0/A5
15 PA4/CS/O2O0/T3C2_/A4
CH32X035G8R6

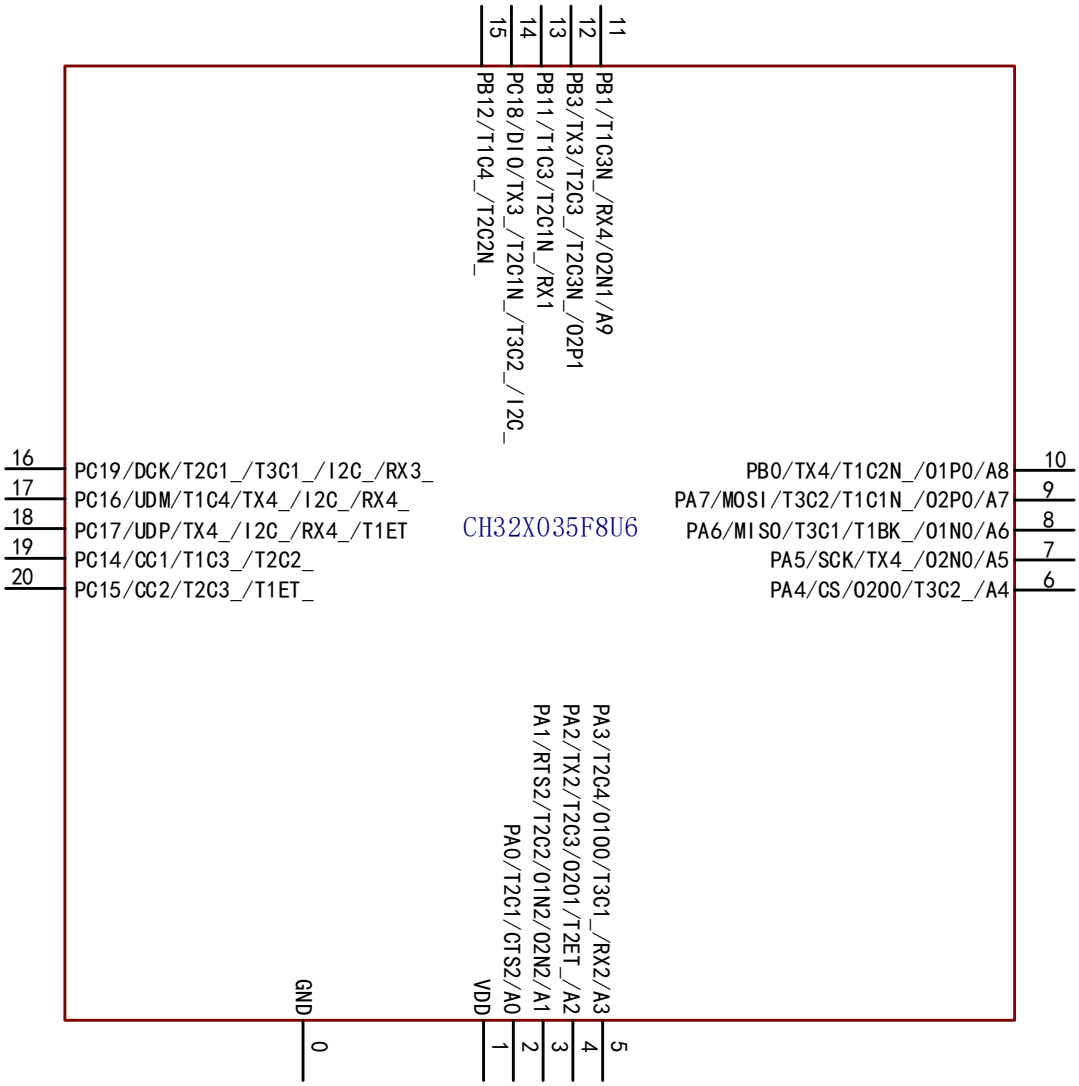

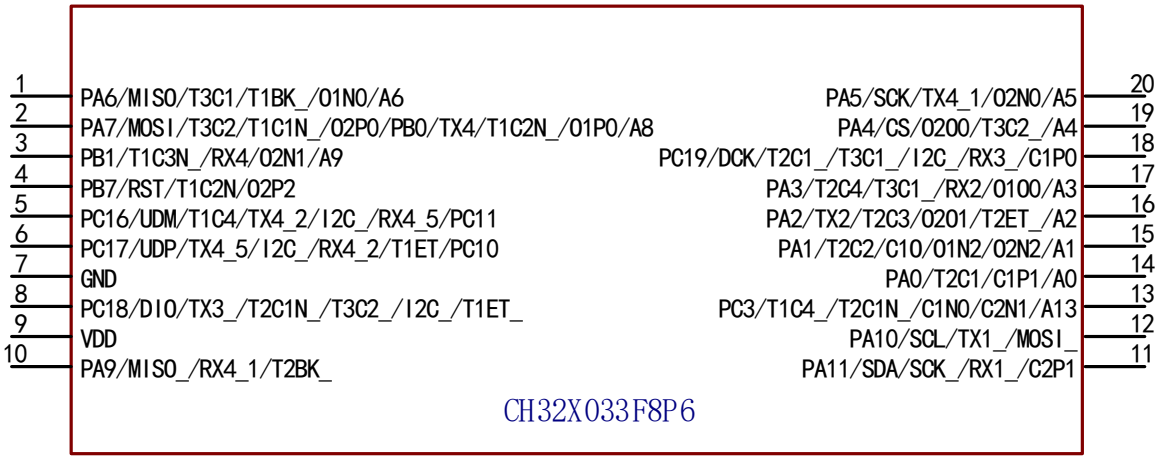

Note: The multiplexed functions in the pin diagram are abbreviated.

Example: A:ADC_ (A10:ADC_IN10)

C:CMP_ (C3N0:CMP3_N0)

T:TIME_ (T2C4:TIM2_CH4、T2C2N:TIM2_CH2N)
O:OPA_ (O1N2:OPA1_N2、O2O0:OPA2_OUT0)
TX2:USART2_TX
CS:SPI_NSS
UDP:USBDP
UDM:USBDM
DIO:SWDIO
DCK:SWCLK

2.2 Pin Description

Note that the pin function descriptions in the table below are for all functions and do not relate to specific product models. Peripheral resources may vary between models, so please check the availability of this feature against the product model resource table before viewing.

Table 2-1 CH32X035 Pin definitions

Pin No.						Pin name	Pin type(1)	Main function (after reset)	Default alternate function	Remapping function
LQFP64M	LQFP48	QFN28	QSOP28	QFN20	TSSOP20					
-	-	0	-	0	-	GND	P	GND		
31	47	-	7	-	15	GND	P	GND		
1	1	-	-	-	-	PA15	I/O	PA15		TX2_2/TX2_4
2	2	-	-	-	-	PA16	I/O	PA16		RX2_2/RX2_4
3	3	-	-	-	-	PA17	I/O	PA17		CTS2_2/CTS2_4
4	4	-	-	-	-	PA18	I/O	PA18		TX3_2/T2ET_1/T2ET_3
5	5	-	-	-	-	PA19	I/O	PA19	T2ET	RX2_1/T2ET_2
6	6	-	-	-	-	PA20	I/O	PA20	T2BK	TX2_1/T2BK_2
7	7	-	-	-	-	PA21	I/O	PA21	RST/T2C1N	RTS2_2
8	-	3	-	-	-	PC0	I/O/A	PC0	A10	TX2_3/T2C4_5 /T2C4_6/T1C1_3/T2BK_4
9	-	-	-	-	5	PC1	I/O/A	PC1	A11(3)	T1C2_3/T2C1N_4/RX2_3
10	-	-	-	-	-	PC2	I/O/A	PC2	A12	T1C3_3/T2C2N_4/CTS2_3
11	-	4	-	-	-	PC3	I/O/A	PC3	C1N0/C2N1/C3N1/A13	RTS2_3/T1C4_3 /T2C3N_4/T2C1N_2/RTS2_4
-	-	-	8	-	4				RST/C1N0/C2N1 /C3N1/A13	
12	8	-	-	-	-	PA22	I/O/A	PA22	T2C2N/C2N0	CK2_2/T2C2N_2/CK2_4
13	9	-	-	-	-	PA23	I/O/A	PA23	T2C3N/C1N1	CK2_1/T2C3N_2
14	10	5	9	2	6	PA0	I/O/A	PA0	T2C1/CTS2/C1P1/A0	T2C1_2
15	11	6	10	3	7	PA1	I/O/A	PA1	RTS2/T2C2/C1O /O1N2/O2N2/A1	CTS2_1/T2C2_2
16	12	7	11	4	8	PA2	I/O/A	PA2	TX2/T2C3/O2O1/C3N0 /A2	RTS2_1/T2ET_5/T2C3_1/T2ET_6
63	-	-	-	-	-	GND	P	GND		
32	48	2	6	1	16	V_{DD}	P	VDD		
17	13	8	12	5	9	PA3	I/O/A	PA3	RX2/T2C4/O1O0/A3(3)	T3C1_3/T2C4_1/CTS3_2
18	-	-	-	-	-	PC4	I/O	PC4		CS_3/T1BK_3/T2ET_4
19	-	-	-	-	-	PC5	I/O	PC5		SCK_3/T1C1N_3
20	14	9	15	6	10	PA4	I/O/A	PA4	CS/CK2/O2O0/A4	RTS3_2/T3C2_3
21	15	10	16	7	11	PA5	I/O/A	PA5	SCK/O2N0/A5	TX4_1/CTS4_4
22	16	11	13	8	12	PA6	I/O/A	PA6	MISO/T3C1/O1N0/A6	CK4_1/RTS4_4/T1BK_1

Pin No.						Pin name	Pin type(1)	Main function (after reset)	Default alternate function	Remapping function
LQFP64M	LQFP48	QFN28	QSOP28	QFN20	TSSOP20					
23	17	12	17	9	13	PA7	I/O/A	PA7	MOSI/T3C2/O2P0/A7(3)	T1C1N_1/TX1_3/CTS4_1
24	18	-	-	-	-	PC6	I/O	PC6		MISO_3/T1C2N_3
25	19	-	-	-	-	PC7	I/O	PC7		MOSI_3/T1C3N_3/PIOC_IO0_1
26	20	13	14	10	-	PB0	I/O/A	PB0	TX4/O1P0/A8	T1C2N_1
27	21	16	20	11	14	PB1(5)	I/O/A	PB1	RX4/O2N1/A9	T1C3N_1
28	22	-	-	-	-	PB2	I/O/A	PB2	CK4/C2O	RX1_3/CK4_2/CK4_5
29	23	14	18	12	-	PB3	I/O/A	PB3	TX3/C3O/O2P1	T2C3_2/T2C3N_5/T2C3_3/T2C3N_6
30	24	15	19	-	-	PB4	I/O/A	PB4	RX3/O1P2	T2C4_2/T3C1_1/T2BK_5 /T2C4_3/T2BK_6
64	-	-	-	-	-	V_{DD}	P	V_{DD}		
33	25	16	20	-	-	PB5(5)	I/O/A	PB5	CK3/O1O1/T1BK	CK1_2/T3C2_1/CK3_1/T1BK_2
34	26	17	21	-	-	PB6	I/O/A	PB6	T1C1N/CTS3/O1N1	T1C1N_2/CTS3_1
35	27	18	22	-	-	PB7	I/O/A	PB7	T1C2N/O2P2/RTS3	RTS3_1/T1C2N_2
36	28	19	23	-	-	PB8	I/O/A	PB8	T1C3N/O1P1	CK3_2/CK4_3/T1C3N_2
37	-	-	-	-	-	PB16	I/O	PB16		TX3_3/T2C1_4
38	-	-	-	-	-	PB17	I/O	PB17		T2C2_4/RX3_3
39	-	-	-	-	-	PB18	I/O	PB18		T2C3_4/CTS3_3
40	-	-	-	-		PB19	I/O	PB19		RTS3_3/T2C4_4
41	29	20	24	-	-	PB9	I/O	PB9	CK1/T1C1/MCO	TX4_3/CK1_1/T1C1_1/T1C1_2
42	30	21	25	-	-	PB10	I/O	PB10	TX1/T1C2	T1C2_1/T1C2_2/TX1_2
43	31	22	26	13	-	PB11	I/O	PB11	T1C3/RX1	T1C3_1/T1C3_2/RX1_2/T2C1N_6
44	32	26	2	17	17	PC16(4) (9)	I/O/A	PC16	UDM/T1C4/CTS1	TX4_2/SCL_2(3)/SDA_4(3)/RX4_5 /CTS1_1/T1C4_1
				-		PC11(4)	I/O	PC11		
45	33	27	3	18	18	PC17(4) (8)	I/O/A	PC17	UDP/RTS1/T1ET	TX4_5/SDA_2(3)/SCL_4(3)/RX4_2 /RTS1_1/T1ET_1
				-		PC10(4)	I/O	PC10		
46	34	25	28	14	19	PC18	I/O	PC18	DIO/PIOC_IO0	TX3_1/T2C1N_5/SDA_3(3)/SCL_5(3) T1ET_2/T1ET_3/T3C2_2
47	35	23	27	15	1	PB12	I/O	PB12		CK1_3/T1C4_2/T2C2N_5/T2C2N_6
48	36	-	-	-	-	PB13	I/O	PB13		TX4_4
49	37	24	1	16	20	PC19	I/O/A	PC19	DCK/PIOC_IO1/C1P0	T2C1_5/T3C1_2/SCL_3(3)/SDA_5(3) /RX3_1/RX4_4/T2C1_6
50	-	-	-	-	-	PB14	I/O	PB14		RX3_2
51	-	-	-	-	-	PB20	I/O	PB20		CK2_3
52	-	-	-	-	-	PB21	I/O	PB21		T2C1_1/CS_1/RTS4_1/T2C1_3
53	-	-	-	-	-	PB15	I/O	PB15	CTS4	T2C2_1/SCK_1/T2C2_3/CTS4_2

Pin No.						Pin name	Pin type(1)	Main function (after reset)	Default alternate function	Remapping function
LQFP64M	LQFP48	QFN28	QSOP28	QFN20	TSSOP20					
										/CTS4_5
54	38	28	4	19	2	PC14	I/O/A	PC14	CC1	T1C3_4/T2C2_6
55	39	1	5	20	3	PC15	I/O/A	PC15	CC2	T2C3_6/T1ET_4
56	40	-	-	-	-	PA8	I/O	PA8	RTS4	RTS1_2/CK4_4/RTS4_2/RTS4_5 /MISO_1
57	41	-	-	-	-	PA9	I/O	PA9		MOSI_1/RX4_1/CTS1_2/MISO_2 /T2BK_1/T2BK_3
58	42	-	-	-	-	PA10	I/O	PA10	SCL(3)	TX1_1/MOSI_2/RX4_3
59	43	-	-	-	-	PA11	I/O/A	PA11	SDA(3)/C2P1	SCK_2/RX1_1
60	44	-	4	-	-	PA12(6)	I/O/A	PA12	C2P0	CS_2/T2C2_5/T2C1N_1/T2C1N_3
61	45	-	5	-	-	PA13(6)	I/O/A	PA13	C3P0	SCL_1(3)/RTS4_3/CTS1_3/T2C3_5 /T2C2N_1/T2C2N_3
62	46	-	-	-	-	PA14	I/O/A	PA14	C3P1	SDA_1(3)/RTS1_3/T2C3N_1/CTS4_3 /T2C3N_3

Table 2-2 CH32X033 Pin definitions

Pin No.		Pin name	Pin type(1)	Main function (after reset)	Default alternate function	Remapping function
	TSSOP20					
-	7	GND	P	GND		
-	9	V_{DD}	P	VDD		
-	14	PA0	I/O/A	PA0	T2C1/CTS2/C1P1/A0	T2C1_2
-	15	PA1	I/O/A	PA1	RTS2/T2C2/C1O /O1N2/O2N2/A1	CTS2_1/T2C2_2
-	16	PA2	I/O/A	PA2	TX2/T2C3/O2O1/C3N0 /A2	RTS2_1/T2ET_5/T2C3_1/T2ET_6
-	17	PA3	I/O/A	PA3	RX2/T2C4/O1O0/A3(3)	T3C1_3/T2C4_1/CTS3_2
-	19	PA4	I/O/A	PA4	CS/CK2/O2O0/A4	RTS3_2/T3C2_3
-	20	PA5	I/O/A	PA5	SCK/O2N0/A5	TX4_1/CTS4_4
-	1	PA6	I/O/A	PA6	MISO/T3C1/O1N0/A6	CK4_1/RTS4_4/T1BK_1
-	2	PA7(7)	I/O/A	PA7	MOSI/T3C2/O2P0/A7(3)	T1C1N_1/TX1_3/CTS4_1
-	10	PA9	I/O	PA9		MOSI_1/RX4_1/CTS1_2/MISO_2 /T2BK_1/T2BK_3
-	12	PA10	I/O	PA10	SCL(3)	TX1_1/MOSI_2/RX4_3
-	11	PA11	I/O/A	PA11	SDA(3)/C2P1	SCK_2/RX1_1
-	2	PB0(7)	I/O/A	PB0	TX4/O1P0/A8	T1C2N_1

Pin No.		Pin name	Pin type(1)	Main function (after reset)	Default alternate function	Remapping function
	TSSOP20					
-	3	PB1	I/O/A	PB1	RX4/O2N1/A9	T1C3N_1
-	4	PB7	I/O/A	PB7	RST/T1C2N/O2P2/RTS3	RTS3_1/T1C2N_2
-	13	PC3	I/O/A	PC3	C1N0/C2N1/C3N1/A13	RTS2_3/T1C4_3 /T2C3N_4/T2C1N_2/RTS2_4
-	5	PC16(4) (9)	I/O/A	PC16	UDM/T1C4/CTS1	TX4_2/SCL_2(3)/SDA_4(3)/RX4_5 /CTS1_1/T1C4_1
		PC11(4)	I/O	PC11		
-	6	PC17(4) (8)	I/O/A	PC17	UDP/RTS1/T1ET	TX4_5/SDA_2(3)/SCL_4(3)/RX4_2 /RTS1_1/T1ET_1
		PC10(4)	I/O	PC10		
-	8	PC18	I/O	PC18	DIO/PIOC_IO0	TX3_1/T2C1N_5/SDA_3(3)/SCL_5(3) T1ET_2/T1ET_3/T3C2_2
-	18	PC19	I/O/A	PC19	DCK/PIOC_IO1/C1P0	T2C1_5/T3C1_2/SCL_3(3)/SDA_5(3) /RX3_1/RX4_4/T2C1_6

Note 1: Explanation of table abbreviations:

I = TTL/CMOS level Schmitt input; O = CMOS level tri-state output;

A = analog signal input or output; P = power supply.

Note 2: The value after the remapping function underline indicates the configuration value of the corresponding bit in the AFIO register. For example: TX2_2 indicates that the corresponding bit of the AFIO register is configured as 10b.

Note 3: The channel 3, channel 7, channel 11, channel 15 and I2C functions of the ADC are not applicable to products with a lot number with the penultimate bit 5 being 0.

Note 4: Except for the CH32X035F8U6 chip (QFN20 package), for CH32X033 and other CH32X035 model chips, the PC10 and PC17 pins are short-joined inside the chip, and both IOs are prohibited from being configured as output functions; the PC11 and PC16 pins are short-joined inside the chip. Seal, prohibiting both IOs from being configured as output functions; in USB applications, the PC10 and PC11 pins should be configured in floating input mode (default value after reset).

Note 5: For CH32X035G8U6 and CH32X035G8R6 chips, PB1 and PB5 pins are shorted and sealed inside the chip, prohibiting both IOs from being configured for output function.

Note 6: For CH32X035G8R6 chip, PA12 and PC14 pins are shorted and sealed inside the chip, prohibiting both IOs from being configured for output function; PA13 and PC15 pins are shorted and sealed inside the chip, prohibiting both IOs from being configured for output function.

Note 7: PA7 and PB0 pins are short-circuited inside the chip, prohibiting both IOs from being configured as output functions.

Note 8: PC17 is the BOOT detection pin. Upon power-up, PC17 is high, causing the chip to enter the BOOT zone.

Note 9: When using I2C functionality, an external pull-up resistor must be connected to the PC16 pin.

2.3 Pin Alternate Functions

Note: The pin function in the table below refer to all functions and does not involve specific model(s). There are differences in peripheral resources between different models. Please confirm whether this function is available according to the particular model's resource table before viewing this table.

Table 2-3 Pin alternate and remapping functions

Alternate / Pin	ADC	TIM1/2	TIM3	USART	CMP	SYS	I2C	SPI	USB	OPA	PIOC
PA0	A0	T2C1 T2C1_2		CTS2	C1P1						
PA1	A1	T2C2 T2C2_2		RTS2 CTS2_1	C1O					O1N2 O2N2	
PA2	A2	T2C3 T2C3_1 T2ET_5 T2ET_6		TX2 RTS2_1	C3N0					O2O1	
PA3	A3(1)	T2C4 T2C4_1	T3C1_3	RX2 CTS3_2						O1O0	
PA4	A4		T3C2_3	CK2 RTS3_2				CS		O2O0	
PA5	A5			TX4_1 CTS4_4				SCK		O2N0	
PA6	A6	T1BK_1	T3C1	CK4_1 RTS4_4				MISO		O1N0	
PA7	A7(1)	T1C1N_1	T3C2	CTS4_1 TX1_3				MOSI		O2P0	
PA8				RTS4 RTS1_2 CK4_4 RTS4_2 RTS4_5				MISO_1			
PA9		T2BK_1 T2BK_3		RX4_1 CTS1_2				MOSI_1 MISO_2			
PA10				TX1_1 RX4_3			SCL(1)	MOSI_2			
PA11				RX1_1	C2P1		SDA(1)	SCK_2			
PA12		T2C2_5 T2C1N_1 T2C1N_3			C2P0			CS_2			
PA13		T2C3_5 T2C2N_1 T2C2N_3		RTS4_3 CTS1_3	C3P0		SCL_1(1)				
PA14		T2C3N_1 T2C3N_3		CTS4_3 RTS1_3	C3P1		SDA_1(1)				
PA15				TX2_2 TX2_4							
PA16				RX2_2 RX2_4							
PA17				CTS2_2 CTS2_4							
PA18		T2ET_1 T2ET_3		TX3_2							
PA19		T2ET T2ET_2		RX2_1							
PA20		T2BK T2BK_2		TX2_1							
PA21		T2C1N		RTS2_2		RST					
PA22		T2C2N T2C2N_2		CK2_2 CK2_4	C2NO						
PA23		T2C3N T2C3N_2		CK2_1	C1N1						
PB0	A8	T1C2N_1		TX4						O1P0	
PB1	A9	T1C3N_1		RX4						O2N1	
PB2				RX1_3 CK4	C2O						

Alternate / Pin	ADC	TIM1/2	TIM3	USART	CMP	SYS	I2C	SPI	USB	OPA	PIOC
				CK4_2 CK4_5							
PB3		T2C3_2 T2C3_3 T2C3N_5 T2C3N_6		TX3	C3O					O2P1	
PB4		T2C4_2 T2C4_3 T2BK_5 T2BK_6	T3C1_1	RX3						O1P2	
PB5		T1BK T1BK_2	T3C2_1	CK3 CK1_2 CK3_1						O1O1	
PB6		T1C1N T1C1N_2		CTS3 CTS3_1						O1N1	
PB7		T1C2N T1C2N_2		RTS3 RTS3_1		RST(3)				O2P2	
PB8		T1C3N T1C3N_2		CK3_2 CK4_3						O1P1	
PB9		T1C1 T1C1_1 T1C1_2		CK1 CK1_1 TX4_3		MCO					
PB10		T1C2 T1C2_1 T1C2_2		TX1 TX1_2							
PB11		T1C3 T1C3_1 T1C3_2 T2C1N_6		RX1 RX1_2							
PB12		T1C4_2 T2C2N_5 T2C2N_6		CK1_3							
PB13				TX4_4							
PB14				RX3_2							
PB15		T2C2_1 T2C2_3		CTS4 CTS4_2 CTS4_5				SCK_1			
PB16		T2C1_4		TX3_3							
PB17		T2C2_4		RX3_3							
PB18		T2C3_4		CTS3_3							
PB19		T2C4_4		RTS3_3							
PB20				CK2_3							
PB21		T2C1_1 T2C1_3		RTS4_1				CS_1			
PC0	A10	T1C1_3 T2C4_5 T2C4_6 T2BK_4		TX2_3							
PC1	A11(1)	T1C2_3 T2C1N_4		RX2_3							
PC2	A12	T1C3_3 T2C2N_4		CTS2_3							
PC3	A13	T1C4_3 T2C3N_4 T2C1N_2		RTS2_3 RTS2_4	C1NO C2N1 C3N1	RST(2)					
PC4		T1BK_3 T2ET_4						CS_3			
PC5		T1C1N_3						SCK_3			
PC6		T1C2N_3						MISO_3			
PC7		T1C3N_3						MOSI_3			PIOC_IO0_1
PC14		T1C3_4 T2C2_6							CC1		
PC15		T1ET_4 T2C3_6							CC2		
PC16		T1C4 T1C4_1		CTS1 CTS1_1 TX4_2			SCL_2(1) SDA_4(1)		UDM		

Alternate / Pin	ADC	TIM1/2	TIM3	USART	CMP	SYS	I2C	SPI	USB	OPA	PIOC
				RX4_5							
PC17		T1ET T1ET_1		RTS1 RTS1_1 RX4_2 TX4_5			SDA_2(1) SCL_4(1)		UDP		
PC18		T1ET_2 T1ET_3 T2C1N_5	T3C2_2	TX3_1		DIO	SDA_3(1) SCL_5(1)				PIOC_IO0
PC19		T2C1_5 T2C1_6	T3C1_2	RX3_1 RX4_4	C1P0	DCK	SCL_3(1) SDA_5(1)				PIOC_IO1

Note: 1. Channel 3, channel 7, channel 11, channel 15 and I2C functions of the ADC are not available for products with a lot number with a penultimate 5 digit of 0;

2. The RST function on pin PC3 is only available for the CH32X035 in the QSOP28 package and TSSOP20 package.

3. The RST function on pin PB7 is only available for CH32X033 in TSSOP20 package.

Chapter 3 Electrical Characteristics

3.1 Test Conditions

All voltages are referenced to GND unless otherwise stated and labelled.

All minimum and maximum values are guaranteed in the worst conditions of ambient temperature, supply voltage and clock frequency. Typical values are based on normal temperature (25°C) and V_{DD} = 5V environment, which are given only as design guidelines.

The data based on comprehensive evaluation, design simulation or technology characteristics are not tested in production. On the basis of comprehensive evaluation, the minimum and maximum values refer to sample tests. Unless otherwise specified that is tested, the characteristic parameters are guaranteed by comprehensive evaluation or design.

Power supply scheme:

Figure 3-1 Typical circuit for conventional power supply

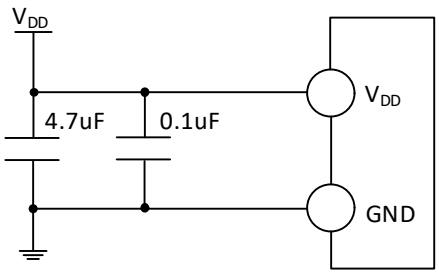

3.2 Absolute Maximum Ratings

Critical or exceeding the absolute maximum value may cause the chip to operate improperly or even be damaged.

Table 3-1 Absolute maximum ratings

Symbol	Description	Min.	Max.	Unit
T_A	Ambient temperature during operation	-40	85	°C
T_S	Ambient temperature during storage	-40	125	°C
V_{DD}	Voltage on external mains supply pin VDD	-0.3	6.0	V
V_{IN}	Voltage on I/O pins	-0.3	V_{DD}+0.3	V
$\lvert\triangle V_{DD_x}\rvert$	Voltage difference between each VDD of the main supply pins		20	mV
$\lvert\triangle GND_{_x}\rvert$	Voltage difference between each GND of the common ground pins		20	mV
$V_{ESD(HBM)}$	ESD electrostatic discharge voltage (HBM) on common I/O pins	4K		V
I_{VDD}	Total combined current of all VDD main supply pins		150	mA
I_{GND}	Total combined current on all GND common ground pins		200	mA
I_{IO}	Sink current on any I/O pins		40	mA
	Source current on any I/O pins		30	mA

3.3 Electrical Characteristics

3.3.1 Operating Conditions

Table 3-2 General operating conditions

Symbol	Parameter	Condition	Min.	Max.	Unit
F_{HCLK} or F_{SYS}	Internal system bus frequency or microprocessor main frequency			48	MHz
V_{DD}	Operating supply voltage (nominal 5V)	Disable USB or PD function	2.0	5.5	V
		Enable USB or PD function	3.0	5.3	
		Disable ADC function	2.0	5.5	V
		Enable ADC function	2.5	5.5	

Table 3-3 Power-on and power-down conditions

Symbol	Parameter	Condition	Min.	Max.	Unit
t_{VDD}	V_{DD} rise time rate		0.1	∞	us/V
	V_{DD} fall time rate		10	∞	

3.3.2 Built-in Reset and Power Control Block Characteristics

Table 3-4 Reset and voltage monitor (For PDR, select high threshold gear)

Symbol	Parameter	Condition	Min.	Typ.	Max.	Unit
V_{PVD}(1)	Level selection of programmable voltage detector	PLS[1:0] = 00 (rising edge)		2.12		V
		PLS[1:0] = 00 (falling edge)		2.1		
		PLS[1:0] = 01 (rising edge)		2.32		V
		PLS[1:0] = 01 (falling edge)		2.3		
		PLS[1:0] = 10 (rising edge)		3.02		V
		PLS[1:0] = 10 (falling edge)		3		
		PLS[1:0] = 11 (rising edge)		4.02		V
		PLS[1:0] = 11 (falling edge)		4		
$V_{PVDhyst}$	PVD hysteresis			20		mV
$V_{POR/PDR}$	Power-on/power-down reset threshold	Rising edge		1.8		V
		Falling edge		1.78		V
$V_{PDRhyst}$	PDR hysteresis			20		mV
$t_{RSTTEMPO}$	Power on reset		4	17	24	ms
	Other resets		6	9	20	us

Note: 1. Normal temperature test value.

3.3.3 Embedded Reference Voltage

Table 3-5 Embedded reference voltage

Symbol	Parameter	Condition	Min.	Typ.	Max.	Unit
V_{REFINT}	Internal reference voltage	T_A = -40℃~85℃	1.16	1.2	1.24	V
$T_{S_vrefint}$	ADC sampling time when reading the internal reference voltage	Slow sampling recommended			11	$1/f_{ADC}$

3.3.4 Supply Current Characteristics

Current consumption is a comprehensive index of a variety of parameters and factors. These parameters and factors include operating voltage, ambient temperature, I/O pin load, software configuration of the product, the operating frequency, flip rate of the I/O pin, the location of the program in memory and the executed code, etc. The current consumption measurement method is as follows:

Figure 3-2 Current consumption measurement

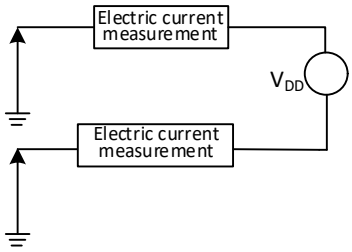

The microcontroller is in the following conditions:
When tested at room temperature VDD = 3.3V: all I/O ports configured with pull-up inputs, HSI = 48M. power consumption of all peripheral clocks enabled or disabled.

Note: For pins not packaged in small package models or pins that are packaged but unused, it is recommended to configure them as pull-up inputs or pull-down inputs. Failure to do so may affect current specifications. For specific procedures, please refer to the EVT low-power example code.

Table 3-6 Typical current consumption in Run mode, the data processing code runs from the internal Flash

Symbol	Parameter	Condition		Typ.		Unit
				Enable all peripherals	Disable all peripherals	
I_{DD}(1)	Current in Run mode	Runs on the high-speed internal RC oscillator (HSI). Uses HB prescaler to reduce the frequency.	F_{HCLK} = 48MHz	4.2	3.0	mA
			F_{HCLK} = 24MHz	3.2	2.6	
			F_{HCLK} = 16MHz	2.5	2.1	
			F_{HCLK} = 8MHz	2.2	2.0	

Note: The above are measured parameters.

Table 3-7 Typical current consumption in Sleep mode, data processing code runs from internal Flash or SRAM

Symbol	Parameter	Condition		Typ.		Unit
				Enable all peripherals	Disable all peripherals	
I_{DD}(1)	Current in Sleep mode (In this case, peripheral power supply and clock are maintained)	Runs on the high-speed internal RC oscillator (HSI). Uses HB prescaler to reduce the frequency.	F_{HCLK} = 48MHz	3.0	1.8	mA
			F_{HCLK} = 24MHz	2.1	1.5	
			F_{HCLK} = 16MHz	1.8	1.4	
			F_{HCLK} = 8MHz	1.5	1.3	

Note: The above are measured parameters.

Table 3-8 Typical current consumption in Stop and Standby mode

Symbol	Parameter	Condition	Typ.	Max.	Unit
I_{DD}	Current in Stop mode	High-speed internal RC oscillator is off (no independent watchdog)	75	150	uA
	Current in Standby mode	Independent watchdog enabled	530		
		AWU status enabled	528		
		Independent watchdog and AWU status enabled	51	90	

Note: The above are measured parameters.

3.3.5 Internal Clock Source Characteristics

Table 3-9 Internal high-speed (HSI) RC oscillator characteristics

Symbol	Parameter	Condition	Min.	Typ.	Max.	Unit
F_{HSI}	Frequency (after calibration)			48		MHz
$DuCy_{HSI}$	Duty cycle		45	50	55	%
ACC_{HSI}	Accuracy of HSI oscillator (after calibration)	TA = 0°C~70°C	-1.7	±0.8	1.6	%
		TA = -40°C~85°C	-2.6	±1.1	2.2	%
$t_{SU(HSI)}$	HSI oscillator startup stabilization time		1.5		3.5	us
$I_{DD(HSI)}$	HSI oscillator power consumption			312		uA

3.3.6 Wakeup Time from Low-power Mode

Table 3-10 Wakeup time from low-power mode(1)

Symbol	Parameter	Condition	Typ.	Unit
$t_{wusleep}$	Wakeup from Sleep mode	Wake up using HSI RC clock	1	us
t_{wustop}	Wakeup from Stop mode	Wake up using HSI RC clock	10	us
$t_{WUSTDBY}$	Wakeup from Standby mode	Wake up using HSI RC clock	10	us

Note: The above parameters are measured parameters.

3.3.7 Memory Characteristics

Table 3-11 Flash memory characteristics

Symbol	Parameter	Condition	Min.	Typ.	Max.	Unit
t_{prog_page}	Page (256 bytes) programming time			1.5	2.0	ms
t_{erase_page}	Page (256 bytes) erase time			2.5	3.0	ms
t_{erase_sec}	Sector (1K bytes) erase time			2.7	3.3	ms

Table 3-12 Flash memory endurance and data retention

Symbol	Parameter	Condition	Min.	Typ.	Max.	Unit
N_{END}	Number of erasures	T_A = 25℃	300K			Times
		T_A = 70℃	100K			Times
t_{RET}	Data retention period	T_A = 25℃	20			Years
		T_A = 70℃	10			Years

3.3.8 I/O Port Characteristics

Table 3-13 General-purpose I/O static characteristics

Symbol	Parameter	Condition	Min.	Typ.	Max.	Unit
V_{IH}	Standard I/O pin, input high-level voltage		(V_{DD}-2)* 0.36+1.3		V_{DD}	V
		V_{DD} = 5V	2.4		V_{DD}	V
		V_{DD} = 3.3V	1.8		V_{DD}	V
V_{IL}	Standard I/O pin, input low-level voltage		0		(V_{DD}-2)* 0.24+0.4	V
		V_{DD} = 5V	0		1.1	V
		V_{DD} = 3.3V	0		0.7	V
V_{OH}	Standard I/O pin, output high-level voltage	I_{IO} = 6mA V_{DD} = 3.3V	V_{DD}-0.4			V
		I_{IO} = 12mA V_{DD} = 5V	V_{DD}-0.5			V
V_{OL}	Standard I/O pin, output low-level voltage	I_{IO} = 8mA V_{DD} = 3.3V			0.4	V
		I_{IO} = 16mA V_{DD} = 5V			0.5	V
V_{hys}	Standard I/O pin Schmitt trigger voltage hysteresis	V_{DD} = 5V	180	350		mV
I_{lkg}	Input leakage current		-2		2	uA
I_{PU}	Standard I/O pin weak pull-up current	V_{DD} = 5V	25	60	140	uA
		V_{DD} = 3.3V	12	30	65	uA
I_{PD}	PA0-PA15 pins weak pull-down current	V_{DD} = 5V	60	150	350	uA
		V_{DD} = 3.3V	30	75	180	uA
C_{IO}	Single I/O pin capacitor (without double I/O co-seal)			5		pF

Note: The above are guaranteed design parameters;

Output Drive Current Characteristics

The GPIOs (General-purpose Input/Output) can absorb or output up to ±8mA of current. In user applications, the total current driven by all IO pins must not exceed the absolute maximum ratings given in section 3.2.

Table 3-14 Input/output AC characteristics

Pin	Symbol	Parameter	Condition	Min.	Max.	Unit
PA	$F_{max(IO)out}$	Maximum frequency	CL=50pF, V_{DD}=2.9~4.0V		40	MHz
			CL=50pF, V_{DD}=4.0~5.5V		56	MHz
	$t_{f(IO)out}$	Output high to low fall time	CL=50pF, V_{DD}=2.9~4.0V		6	ns
			CL=50pF, V_{DD}=4.0~5.5V		4.2	ns
	$t_{r(IO)out}$	Output low to high rise time	CL=50pF, V_{DD}=2.9~4.0V		8.4	ns
			CL=50pF, V_{DD}=4.0~5.5V		6	ns
PB	$F_{max(IO)out}$	Maximum frequency	CL=50pF, V_{DD}=2.9~4.0V		16	MHz
			CL=50pF, V_{DD}=4.0~5.5V		24	MHz
	$t_{f(IO)out}$	Output high to low fall time	CL=50pF, V_{DD}=2.9~4.0V		6	ns
			CL=50pF, V_{DD}=4.0~5.5V		4.2	ns
	$t_{r(IO)out}$	Output low to high rise time	CL=50pF, V_{DD}=2.9~4.0V		18	ns
			CL=50pF, V_{DD}=4.0~5.5V		13.2	ns
PC	$F_{max(IO)out}$	Maximum frequency	CL=50pF, V_{DD}=2.9~4.0V		28	MHz
			CL=50pF, V_{DD}=4.0~5.5V		36	MHz
	$t_{f(IO)out}$	Output high to low fall time	CL=50pF, V_{DD}=2.9~4.0V		8.4	ns
			CL=50pF, V_{DD}=4.0~5.5V		7.2	ns
	$t_{r(IO)out}$	Output low to high rise time	CL=50pF, V_{DD}=2.9~4.0V		13.2	ns
			CL=50pF, V_{DD}=4.0~5.5V		9.6	ns

Note: The above are guaranteed design parameters.

3.3.9 RST Pin Characteristics

Table 3-15 External reset pin characteristics

Symbol	Parameter	Condition	Min.	Typ.	Max.	Unit
$V_{F(RST)}$	RST input pulse width		300			ns

Circuit reference design and requirements:

Figure 3-3 Typical circuit for external reset pin

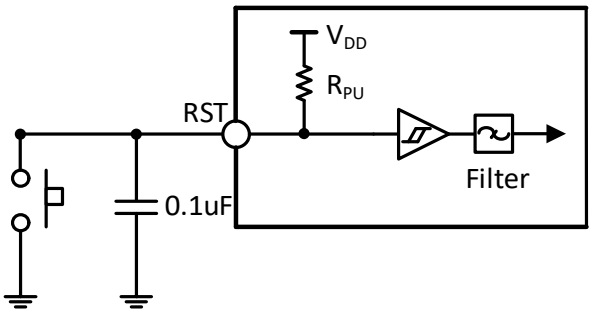

3.3.10 USB PD Interface Characteristics

Table 3-16 PD interface characteristics, application: PD communication

Symbol	Parameter	Condition	Min.	Typ.	Max.	Unit
t_{Rise}	Rising time	Time between 10% and 90% of the range, minimum value for no-load conditions.	300		600	ns
t_{Fall}	Falling time	Time between 10% and 90% of the range, minimum value for no-load conditions.	300		600	ns
v_{Swing}	Output voltage swing (peak-to-peak)	Low voltage output mode, CL=50pF	1.04	1.12	1.20	V
I_{pu}	CC pull-up current	Pin voltage < V_{DD} - 1V, PUCC[1:0] = 11	64	80	96	uA
		Pin voltage < V_{DD} - 1V, PUCC[1:0] = 10	144	180	216	uA
		Pin voltage < V_{DD} - 1V, PUCC[1:0] = 01	264	330	396	uA

Note: Adding the Type-C/PD high-voltage interface chip CH211 enables 28V withstand voltage for PD pins and incorporates the 5K1 controllable pull-down resistor specified by the Type-C standard.

3.3.11 TIM Timer Characteristics

Table 3-17 TIMx characteristics

Symbol	Parameter	Condition	Min.	Max.	Unit
$t_{res(TIM)}$	Timer reference clock		1		$t_{TIMxCLK}$
		$f_{TIMxCLK}$ = 48MHz	20.8		ns
F_{EXT}	Timer external clock frequency on CH1 to CH4		0	$f_{TIMxCLK}$/2	MHz
		$f_{TIMxCLK}$ = 48MHz	0	24	MHz
R_{esTIM}	Timer resolution			16	Bit
$t_{COUNTER}$	16-bit counter clock cycle when the internal clock is selected		1	65536	$t_{TIMxCLK}$
		$f_{TIMxCLK}$ = 48MHz	0.0208	1363	us
t_{MAX_COUNT}	Maximum possible count			65535	$t_{TIMxCLK}$
		$f_{TIMxCLK}$ = 48MHz		1363	us

3.3.12 I2C Interface Characteristics

Figure 3-4 I2C bus timing diagram

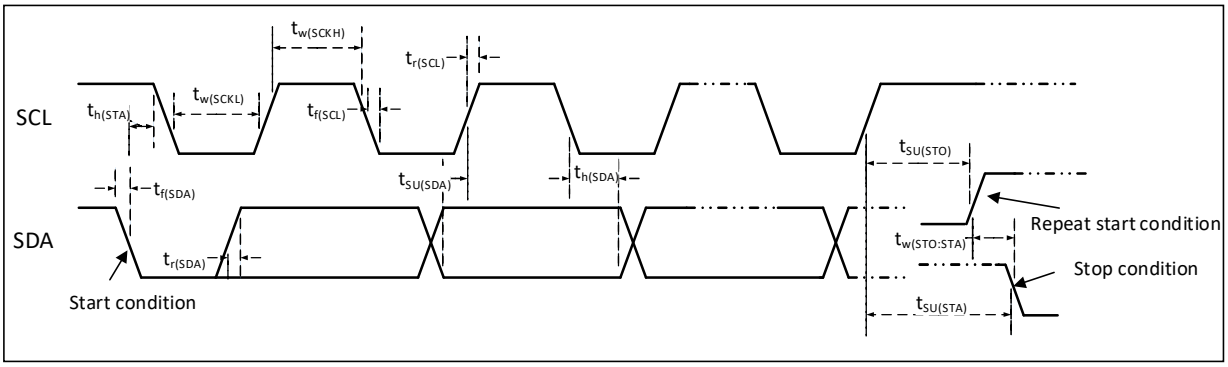

Table 3-18 I2C interface characteristics

Symbol	Parameter	Standard I2C		Fast I2C		Unit
		Min.	Max.	Min.	Max.	
$t_{w(SCKL)}$	SCL clock low level time	4.7		1.2		us
$t_{w(SCKH)}$	SCL clock high level time	4.0		0.6		us
$t_{SU(SDA)}$	SDA data setup time	250		100		ns
$t_{h(SDA)}$	SDA data hold time	0		0	900	ns
$t_{r(SDA)}/t_{r(SCL)}$	SDA and SCL rise time		1000	20		ns
$t_{f(SDA)}/t_{f(SCL)}$	SDA and SCL fall time		300			ns
$t_{h(STA)}$	Start condition hold time	4.0		0.6		us
$t_{SU(STA)}$	Repeated start condition setup time	4.7		0.6		us
$t_{SU(STO)}$	Stop condition setup time	4.0		0.6		us
$t_{w(STO:STA)}$	Time from stop condition to start condition (bus free)	4.7		1.2		us
C_b	Capacitive load for each bus		400		400	pF

3.3.13 SPI Interface Characteristics

Figure 3-5 SPI timing diagram in Master mode

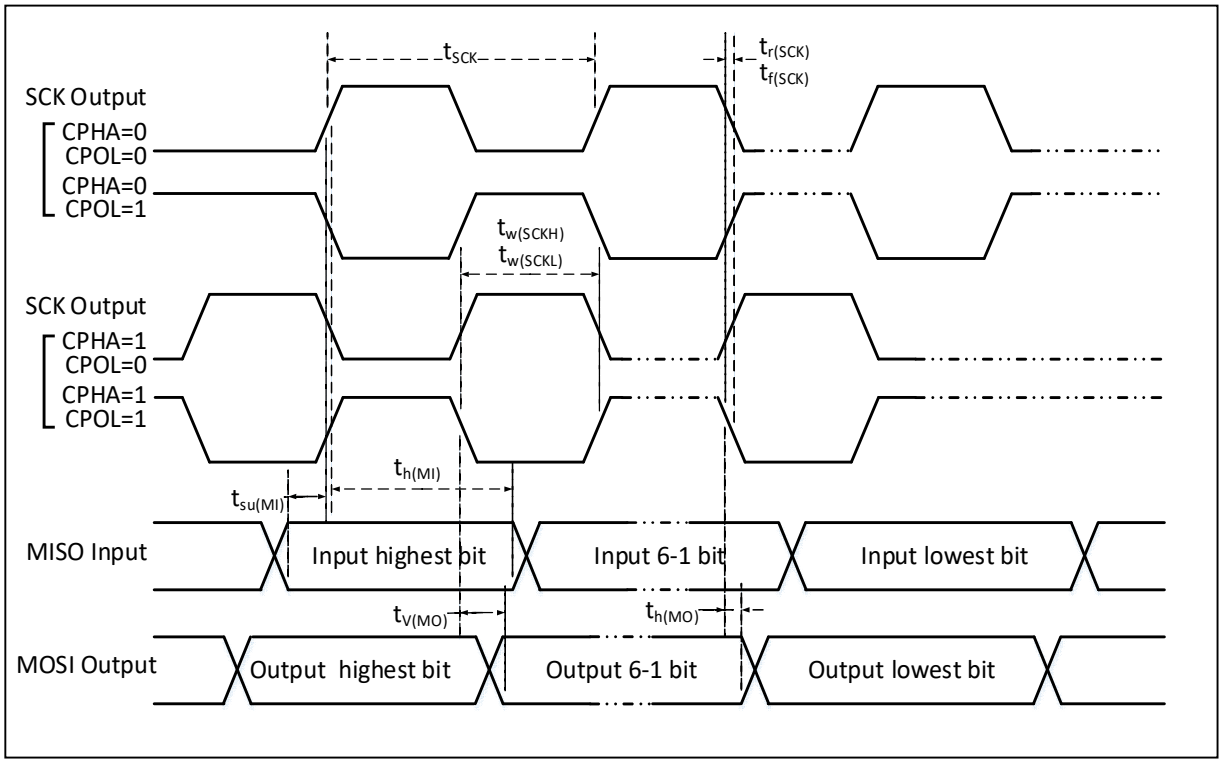

Figure 3-6-1 SPI timing diagram in Slave mode (CPHA=0, CPOL=0)

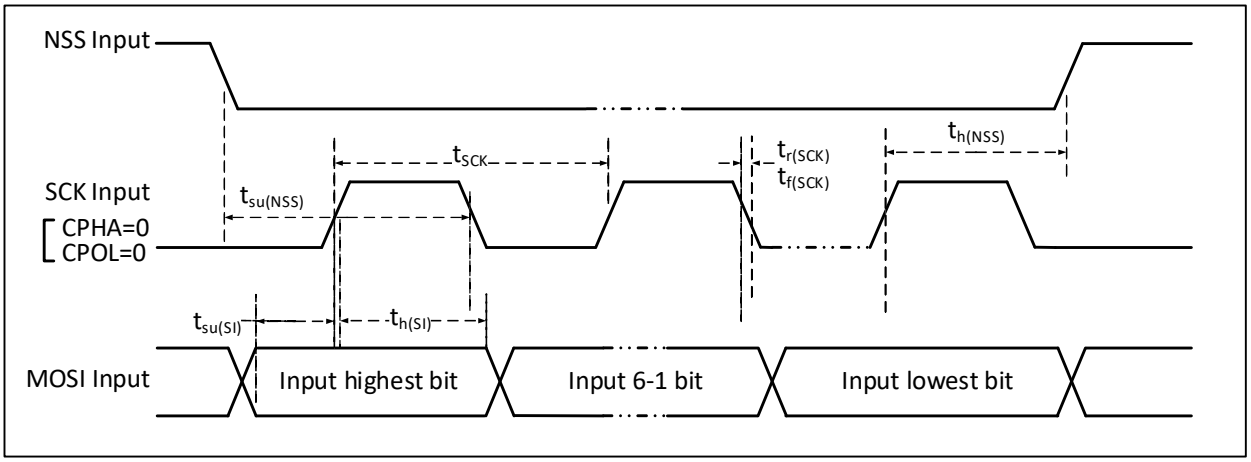

Figure 3-6-2 SPI timing diagram in Slave mode (CPHA=0, CPOL=1)

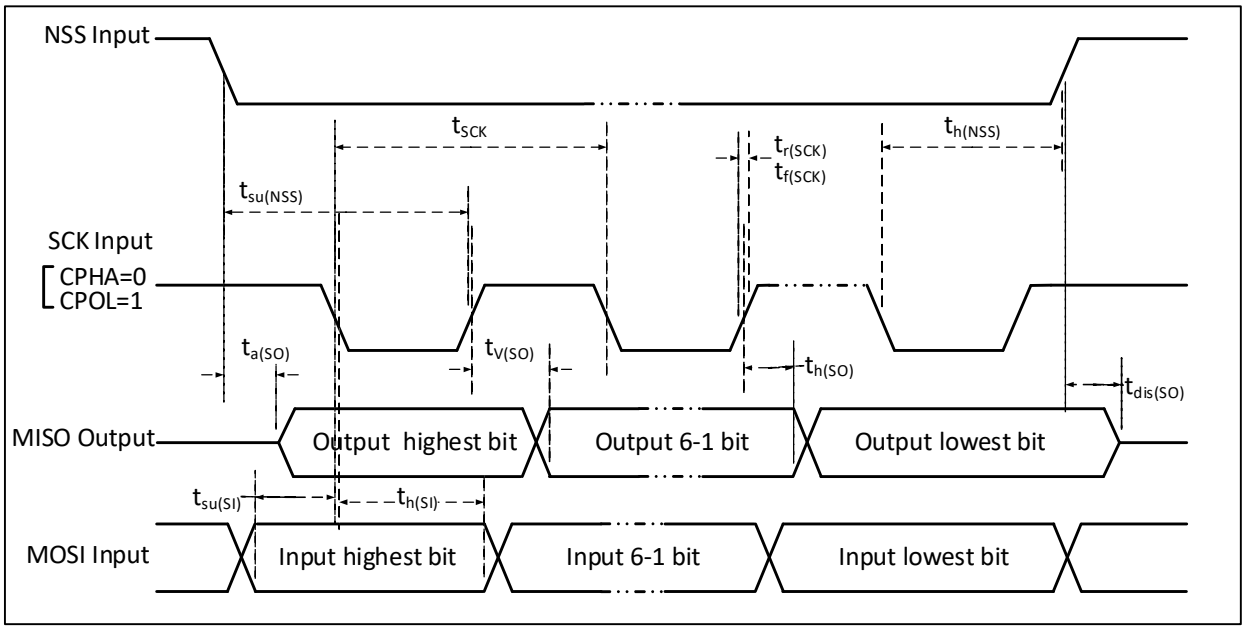

Figure 3-7-1 SPI timing diagram in Slave mode (CPHA=1, CPOL=0)

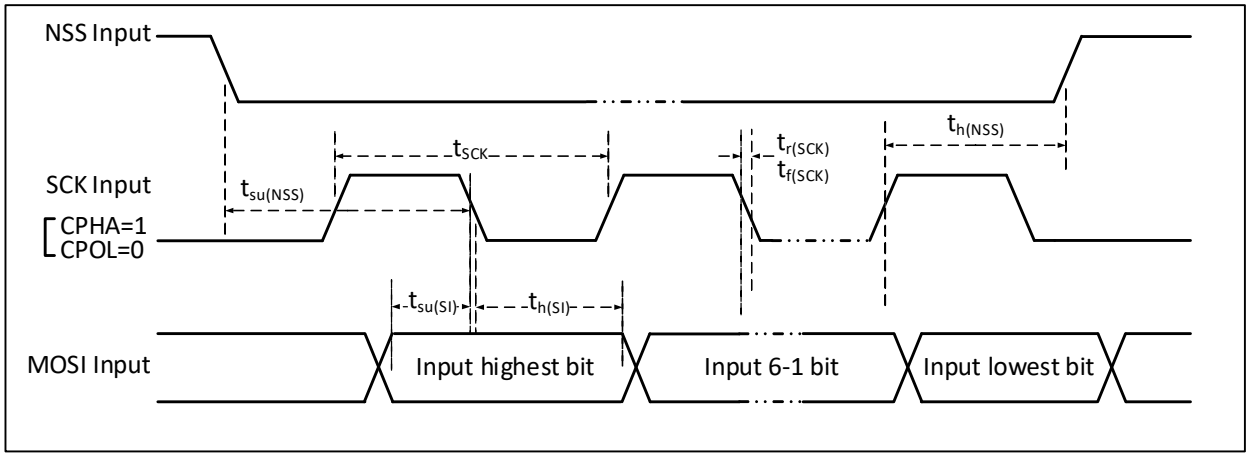

Figure 3-7-2 SPI timing diagram in Slave mode (CPHA=1, CPOL=1)

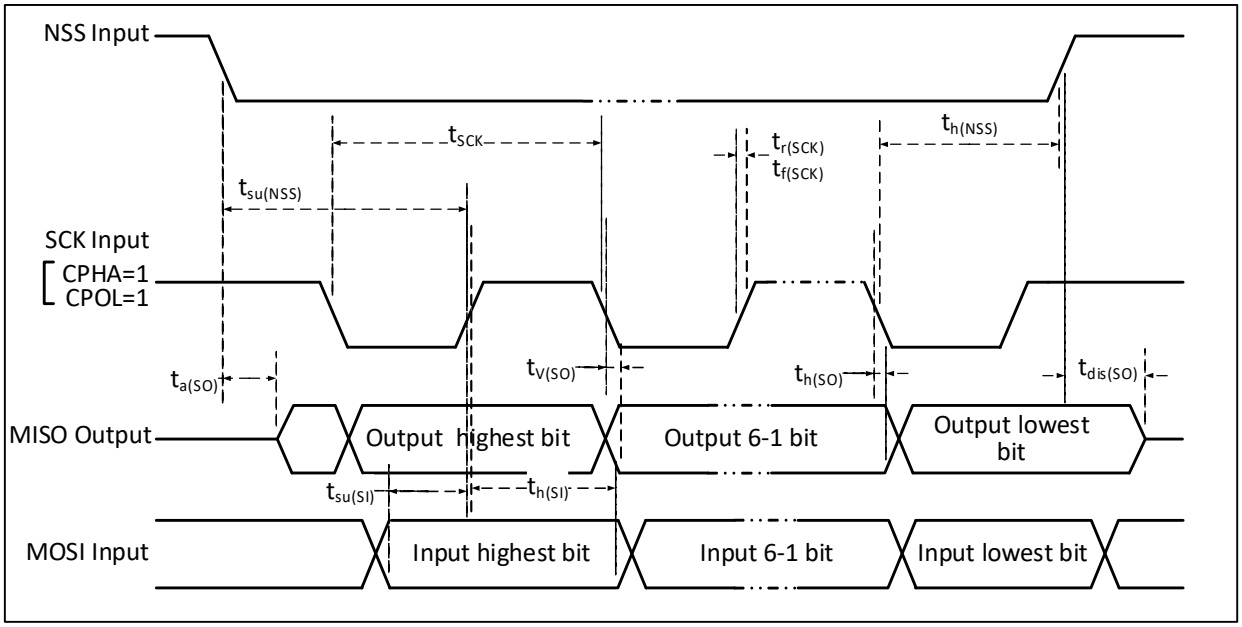

Table 3-19 SPI interface characteristics

Symbol	Parameter	Condition	Min.	Max.	Unit
f_{SCK}/t_{SCK}	SPI clock frequency	Master mode		24	MHz
		Slave mode		24	MHz
$t_{r(SCK)}/t_{f(SCK)}$	SPI clock rise and fall time	Load capacitance: C = 30pF		20	ns
$t_{SU(NSS)}$	NSS setup time	Slave mode	$2t_{HCLK}$		ns
$t_{h(NSS)}$	NSS hold time	Slave mode	$2t_{HCLK}$		ns
$t_{w(SCKH)}/t_{w(SCKL)}$	SCK high-level and low-level time	Master mode, f_{PCLK} = 24MHz, Prescaler factor = 4	70	100	ns
$t_{SU(MI)}$	Data input setup time	Master mode	5		ns
$t_{SU(SI)}$		Slave mode	5		ns
$t_{h(MI)}$	Data input hold time	Master mode	5		ns
$t_{h(SI)}$		Slave mode	4		ns
$t_{a(SO)}$	Data output access time	Slave mode, f_{PCLK} = 20MHz	0	$1t_{HCLK}$	ns
$t_{dis(SO)}$	Data output disable time	Slave mode	0	10	ns
$t_{V(SO)}$	Data output valid time	Slave mode (After enable edge)		25	ns
$t_{V(MO)}$		Master mode (After enable edge)		5	ns
$t_{h(SO)}$	Data output hold time	Slave mode (After enable edge)	15		ns
$t_{h(MO)}$		Master mode (After enable edge)	0		ns

3.3.14 USB Interface Characteristics

Table 3-20 USB interface I/O characteristics

Symbol	Parameter	Condition	Min.	Typ.	Max.	Unit
V_{DD}	USB operating voltage	Selection of USB parameters according to VDD voltage	3.0		5.3	V
V_{SE}	Single-ended receiver threshold	Nominal voltage	1.2		1.9	V

V_{OL}	Static output low level				0.3	V
V_{OH}	Static output high level		2.8			V
V_{BC_REF}	BC comparator reference voltage			0.4		V
V_{BC_SRC}	BC protocol output voltage			0.6		V

3.3.15 12-bit ADC Characteristics

Table 3-21 ADC characteristics

Symbol	Parameter	Condition	Min.	Typ.	Max.	Unit
V_{DD}	Supply voltage	Rated performance	3.0	5	5.3	V
		Performance may be reduced	2.5		5.5	V
I_{DD}	Supply current			290	480	uA
f_{ADC}	ADC clock frequency	V_{DD} >= 3.2V	3		8	MHz
		V_{DD} < 3.2V	3		6	MHz
f_S	Sampling rate	V_{DD} >= 3.2V	125		470	KHz
		V_{DD} < 3.2V	125		353	KHz
V_{AIN}	Conversion voltage range		0		V_{DD}	V
R_{ADC}	Sampling switch resistance		0.5	0.6	1.5	kΩ
C_{ADC}	Internal sample and hold capacitor			21		pF
t_{Iat}	Injected trigger conversion latency			1		$1/f_{ADC}$
t_{Iatr}	Regular trigger conversion latency			1		$1/f_{ADC}$
t_s	Sampling time			3.5		$1/f_{ADC}$
t_{CONV}	Total conversion time (including sampling time)		17		24	$1/f_{ADC}$

Note: The above are guaranteed design parameters.

Table 3-22 ADC error

Symbol	Parameter	Condition	Min.	Typ.	Max.	Unit
EO	Dysregulation error	f_{ADC} = 3MHz,		±4		LSB
ED	Differential nonlinearity error	R_{AIN} < 10 kΩ,		±1	±10	
EL	Integral nonlinearity error	V_{DD} = 5V		±4	±20	

Note: The above are guaranteed design parameters.

C_p represents the parasitic capacitance on the PCB and the pad (about 5pF), which may be related to the quality of the pad and PCB layout. A larger C_p value will reduce the conversion accuracy, the solution is to reduce the f_{ADC} value.

Figure 3-8 ADC typical connection diagram

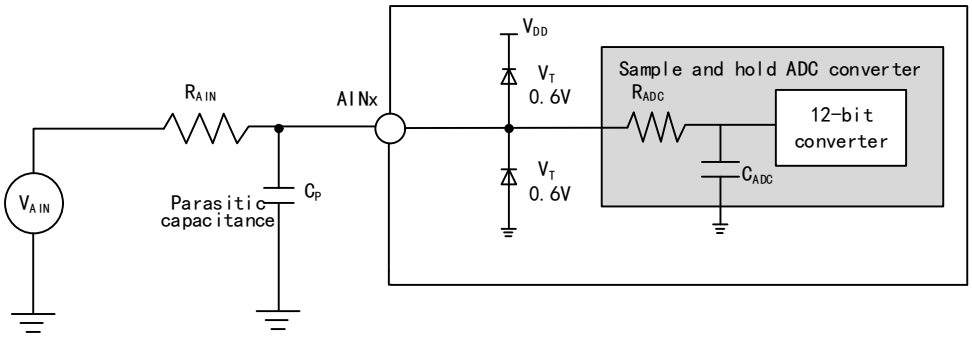

Figure 3-9 Analog power supply and decoupling circuit reference

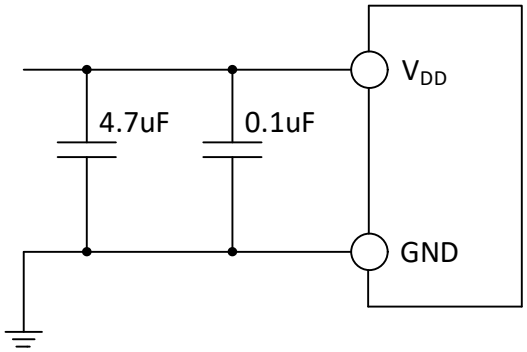

3.3.16 OPA Characteristics

Table 3-23 OPA characteristics

Symbol	Parameter	Condition: V_{DD} = 5V	Min.	Typ.	Max.	Unit
V_{DD}	Supply voltage	Recommended not less than 2.5V	2	5	5.5	V
V_{CM}	Common mode input voltage		0		V_{DD}	V
$V_{IOFFSET}$	Input offset voltage	Common mode input V_{CM} = 0.5V		±5	±13	mV
		Common mode input V_{CM} = V_{DD}/2		±3	±10	
		Common mode input V_{CM} = V_{DD}-0.5V		±5	±17	
I_{LOAD}	Drive current	R_{LOAD} = 5kΩ			1	mA
I_{LOAD_PGA}	PGA mode drive current				400	uA
$I_{DDOPAMP}$	Current consumption	No load, static mode		210		uA
C_{MRR}(1)	Common mode rejection ratio	@1kHz		110		dB
P_{SRR}(1)	Power supply rejection ratio	@1kHz		71		dB
Av(1)	Open loop gain	C_{LOAD} = 5pF		110		dB
G_{BW}(1)	Unit gain bandwidth	C_{LOAD} = 5pF		13		MHz

P_M(1)	Phase margin	C_{LOAD} = 5pF		88		
S_R(1)	Slew rate limited	C_{LOAD} = 5pF		5		V/us
t_{WAKUP}(1)	Setup time from shutdown to wake up, 0.1%	Input V_{DD}/2, C_{LOAD} = 50pF, R_{LOAD} = 5kΩ			1	us
R_{LOAD}	Resistive load		5			kΩ
C_{LOAD}	Capacitive load				50	pF
V_{OHSAT}(2)	High saturation output voltage	R_{LOAD} = 5kΩ	V_{DD}-300			mV
		R_{LOAD} = 20kΩ	V_{DD}-50			
V_{OLSAT}(2)	Low saturation output voltage	R_{LOAD} = 5kΩ			10	mV
		R_{LOAD} = 20kΩ			7	
PGA Gain(1)	NSEL=010b mode in phase	Gain =16, PA1=GND	-3		3	%
	Internal in-phase PGA	Gain = 4 V_{INP} < (V_{DD}/7)	-1		1	%
		Gain = 8 V_{INP} < (V_{DD}/15)	-1		1	%
		Gain = 16 V_{INP} < (V_{DD}/31)	-1		1	%
		Gain = 32 V_{INP} <(V_{DD}/63)	-1		1	%
Delta R	Absolute change in resistance		-15		15	%
EN(1)	Equivalent input voltage noise	R_{LOAD} = 5kΩ@1kHz		100		nV/sqrt(Hz)
		R_{LOAD} = 20kΩ@1KHz		60		

Note: 1. The source simulation is not a real measurement.

2. The load current limits the saturated output voltage.

3.3.17 CMP Characteristics

Table 3-24 CMP voltage comparator characteristics

Symbol	Parameter	Condition: V_{DD} = 5V	Min.	Typ.	Max.	Unit
V_{DD}	Supply voltage	Recommended not less than 2.5V	2	5	5.5	V
V_{CM}	Common mode input voltage		0		V_{DD}	V
$V_{IOFFSET}$(1)	Input offset voltage			±5	±18	mV
$I_{DDOPAMP}$	Current consumption			75		uA
V_{hys}	Hysteresis voltage			±24		mV
t_D(1)	Comparator delay. V_{INP} varies from (V_{INN}-100mV) to (V_{INN}+100mV) change	0 ≤ VINN ≤ V_{DD}		15	50	ns

Note: 1. Design parameters are guaranteed.

Chapter 4 Package and Ordering Information

Packages

Package Form	Body Size	Pin Pitch		Package Form	Order Model
LQFP64M	10*10mm	0.5mm	19.7mil	Low Profile Quad Flat Pack	CH32X035R8T6
LQFP48	7*7mm	0.5mm	19.7mil	Low Profile Quad Flat Pack	CH32X035C8T6
QFN28	4*4mm	0.4mm	15.7mil	Quad Flat No-Lead Package	CH32X035G8U6
QSOP28	3.9*9.9mm	0.635mm	25.0mil	Quarter-sized Outline Package	CH32X035G8R6
QFN20	3*3mm	0.4mm	15.7mil	Quad Flat No-Lead Package	CH32X035F8U6
TSSOP20	4.4*6.5mm	0.65mm	25.6mil	Thin Shrink Small Outline Package	CH32X035F7P6
TSSOP20	4.4*6.5mm	0.65mm	25.6mil	Thin Shrink Small Outline Package	CH32X033F8P6

Note: All dimensions are in millimeters. The pin center spacing values are nominal values, with no error. Other than that, the dimensional error is not greater than the greater of ±0.2mm or 10%.

4.1 LQFP64M package

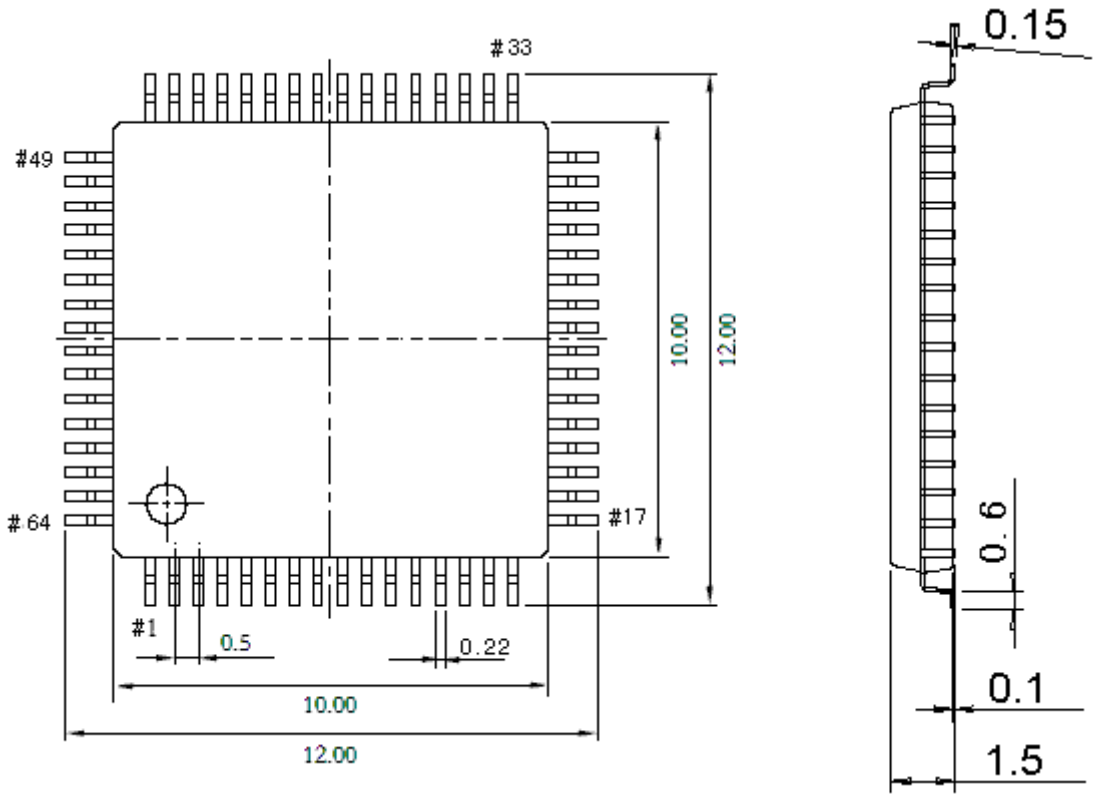

4.2 LQFP48 package

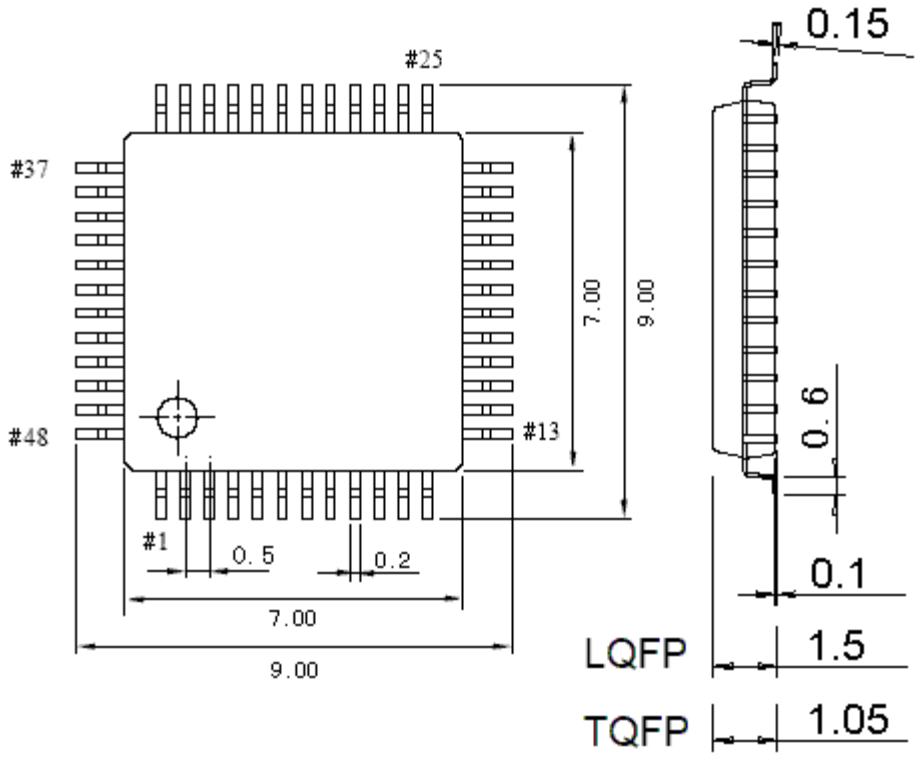

4.3 QFN28 package

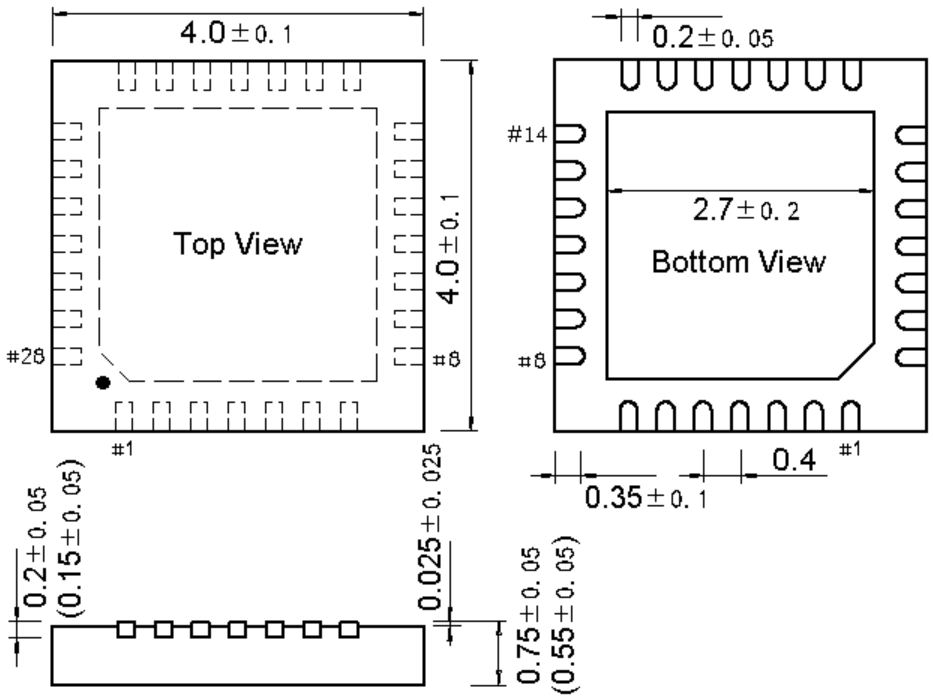

4.4 QSOP28 package

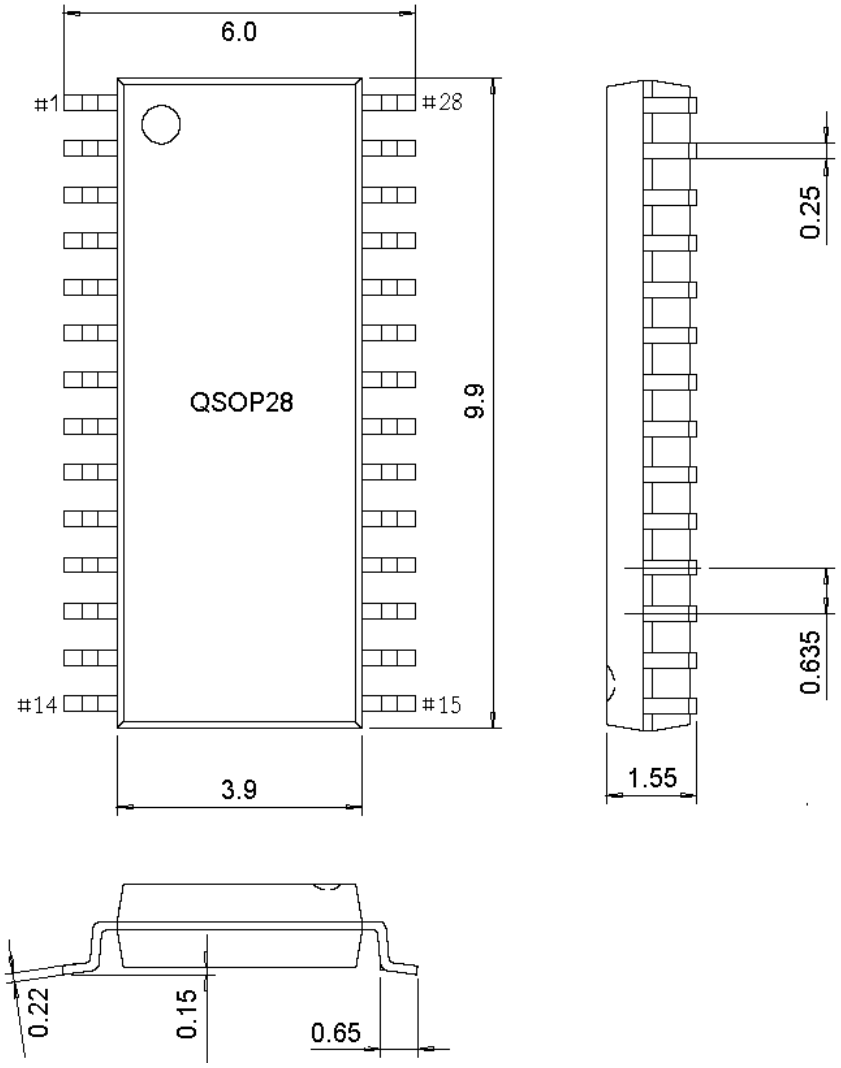

4.5 QFN20 package

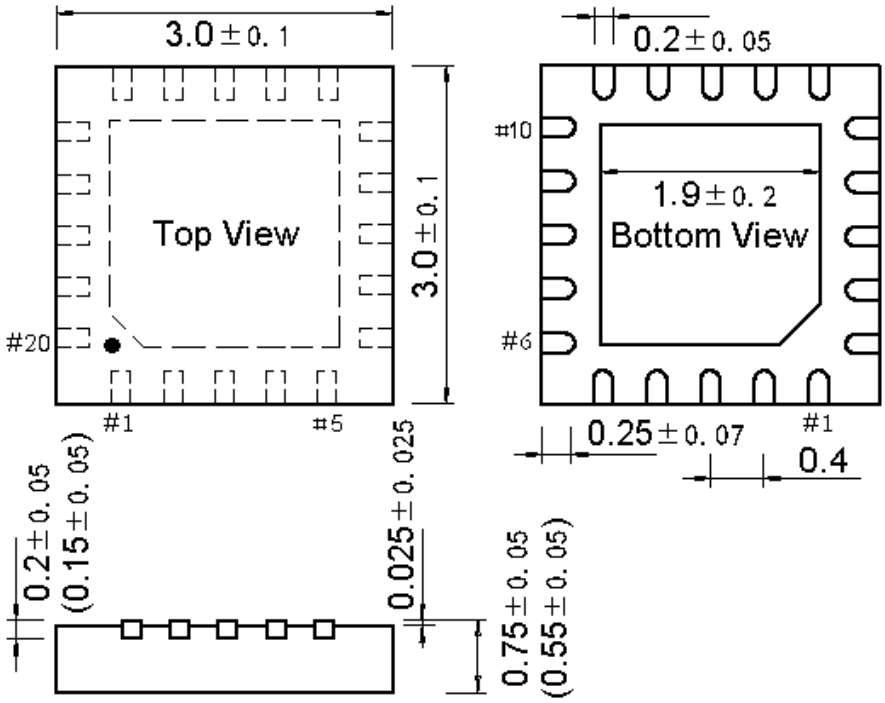

4.6 TSSOP20 package

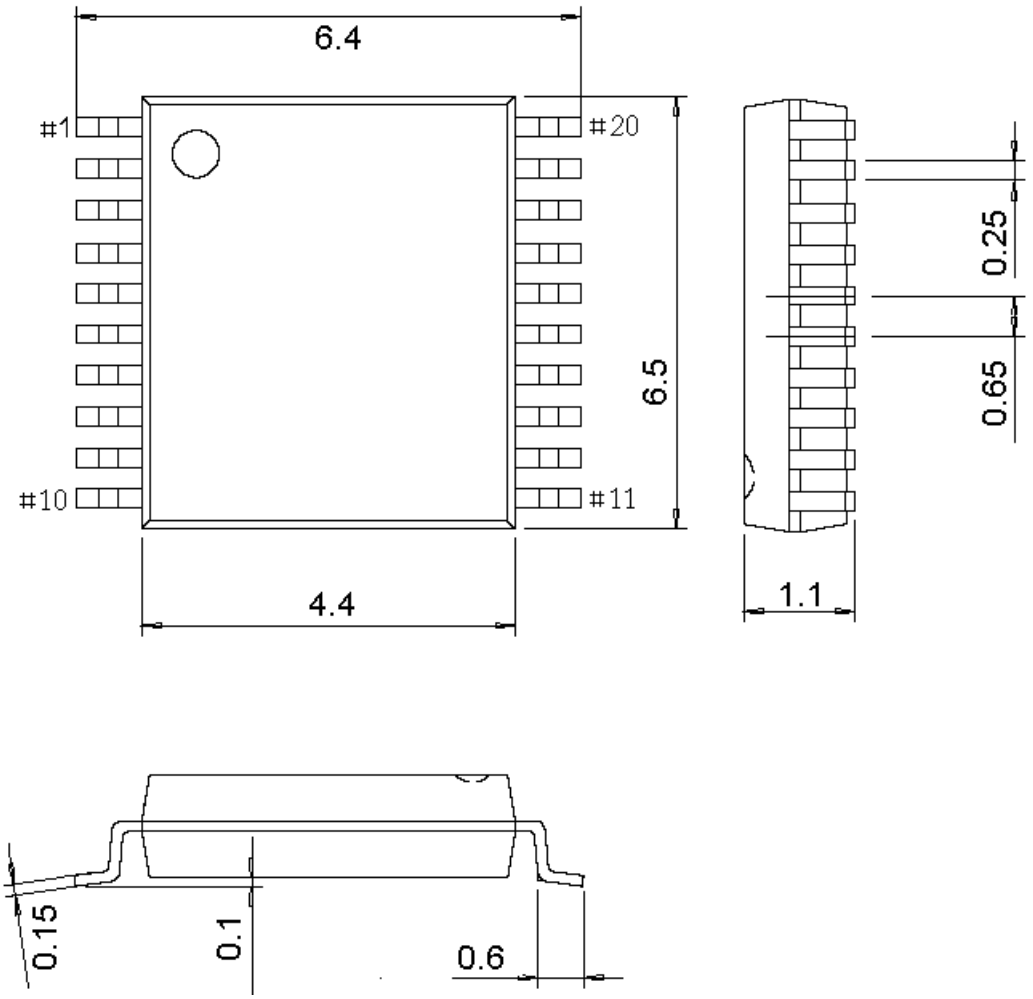

Series Product Naming Rules

Example: CH32 V 3 03 R 8 T 6

Device family

F = ARM-based, general-purpose MCU
V = QingKe RISC-V-based, general-purpose MCU
L = QingKe RISC-V-based, low power MCU
X = QingKe RISC-V-based, Dedicated architecture or special IO

Product type

0 = QingKe V2/V4 core, great value version, main frequency <= 48M
1 = M3/ QingKe V3/V4 core, basic version, main frequency <= 72M
2 = M3/ QingKe V4 non-floating-point core, enhanced version, main frequency <= 144M
3 = QingKe V4F floating-point core, main frequency <= 144M

Device subfamily

03 = General-purpose
05 = Connectivity (USB high-speed, SDIO, CAN)
07 = Interconnectivity (USB high-speed, CAN, Ethernet, DVP, SDIO, FSMC)
08 = Wireless (BLE5.X, CAN, USB, Ethernet)
35 = Connectivity (USB, USB PD/Type C)
33 = Connectivity (USB)

Pin count

J = 8 pins	A = 16 pins	F = 20 pins	G = 28 pins
K = 32 pins	T = 36 pins	C = 48 pins	R = 64 pins
W = 68 pins	V = 100 pins	Z = 144 pins	
J = 8 pins	A = 16 pins	F = 20 pins	G = 28 pins

Flash memory size

4 = 16 Kbytes of Flash memory
6 = 32 Kbytes of Flash memory
7 = 48 Kbytes of Flash memory
8 = 64 Kbytes of Flash memory
B = 128 Kbytes of Flash memory
C = 256 Kbytes of Flash memory

Package

T = LQFP	U = QFN	R = QSOP	P = TSSOP	M = SOP

Temperature range

6 = -40℃~85℃ (industrial-grade)

7 = -40℃~105℃ (automotive-grade 2)

3 = -40℃~125℃ (automotive-grade 1)

D = -40℃~150℃ (automotive-grade 0)