Compact Automated Two-Nozzle Bottle-Filling Cell

Electrical schematic set | Revision A | 24 folios

FICTIONAL CONCEPT DESIGN - NOT FOR CONSTRUCTION

CONCEPTUAL SAFETY ARCHITECTURE - REQUIRES REVIEW, RISK ASSESSMENT,
VERIFICATION AND VALIDATION BY A QUALIFIED MACHINERY-SAFETY ENGINEER.
NO PERFORMANCE LEVEL, SIL, CATEGORY OR REGULATORY COMPLIANCE IS CLAIMED.

400/230 VAC 3P+N+PE, 50 Hz, TN-S assumed | 24 VDC PELV | Indoor IP54 concept

FICTIONAL CONCEPT DESIGN - NOT FOR CONSTRUCTION

E-02 DRAWING INDEX

E-01 Cover, metadata, revision history

E-02 Drawing index

E-03 Design basis, legends, reference designations

E-04 Functional overview and operating-state block diagram

E-05 Single-line power distribution

E-06 Incoming isolation and branch protection

E-07 24 VDC PELV supply and protected distribution

E-08 Conceptual safety architecture

E-09 PLC, HMI, Ethernet and controller power

E-10 PLC digital inputs - module DI001

E-11 PLC digital inputs - module DI002

E-12 PLC digital inputs - module DI003 and spares

E-13 PLC digital outputs - module DO001

E-14 PLC digital outputs - module DO002 and spares

E-15 PLC analog inputs and outputs

E-16 Conveyor VFD control and power wiring

E-17 Conveyor motor, PE and shield termination

E-18 Dosing-pump VFD and motor interface

E-19 Two-channel filling valves and flow instrumentation

E-20 Bottle, gate, clamp, air and product sensors

E-21 HMI, stack light and capping-station interface

E-22 Terminal-strip plan and field connections

E-23 Cable overview, EMC and segregation notes

E-24 Spare capacity, general notes and commissioning prerequisites

FICTIONAL CONCEPT DESIGN - NOT FOR CONSTRUCTION

E-03 DESIGN BASIS, LEGENDS, REFERENCE DESIGNATIONS

REFERENCE DESIGNATION: =FC01+LOCATION-TAG | CP01 panel | FD01 field | OP01 operator | IF01 capping

SUPPLY BASIS: 400/230 VAC, 3P+N+PE, 50 Hz, TN-S assumed. CONTROL: 24 VDC PELV.

PNP ordinary sensors. Analog: isolated 4-20 mA; provisional raw 5530-27648. Field devices terminate at identified X strips.

PROTECTION, CONDUCTOR SIZING, VOLTAGE DROP, FAULT WITHSTAND AND THERMAL RESULTS ARE PRELIMINARY.

Wire IDs are unique physical segments. Cable/core and terminal references appear beside signal blocks; schedules are authoritative.

No PL, SIL, category, CE, UL, SCCR or regulatory compliance is claimed.

FICTIONAL CONCEPT DESIGN - NOT FOR CONSTRUCTION

CONCEPTUAL SAFETY ARCHITECTURE - REQUIRES REVIEW, RISK ASSESSMENT,
VERIFICATION AND VALIDATION BY A QUALIFIED MACHINERY-SAFETY ENGINEER.
NO PERFORMANCE LEVEL, SIL, CATEGORY OR REGULATORY COMPLIANCE IS CLAIMED.

E-04 FUNCTIONAL OVERVIEW AND OPERATING-STATE BLOCK DIAGRAM

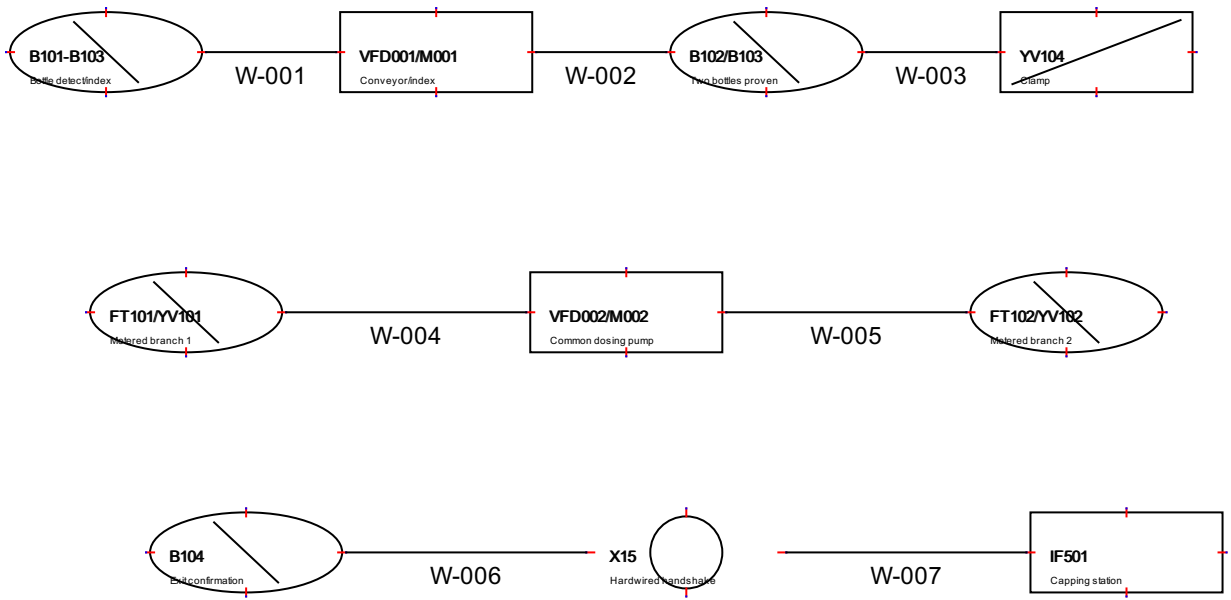

FICTIONAL CONCEPT DESIGN - NOT FOR CONSTRUCTION

Author : Principal electrical engineer - concept	Functional overview and operating-state block diagram	File : filling_cell.qet
Date :		Folio : 4/24

E-05 SINGLE-LINE POWER DISTRIBUTION

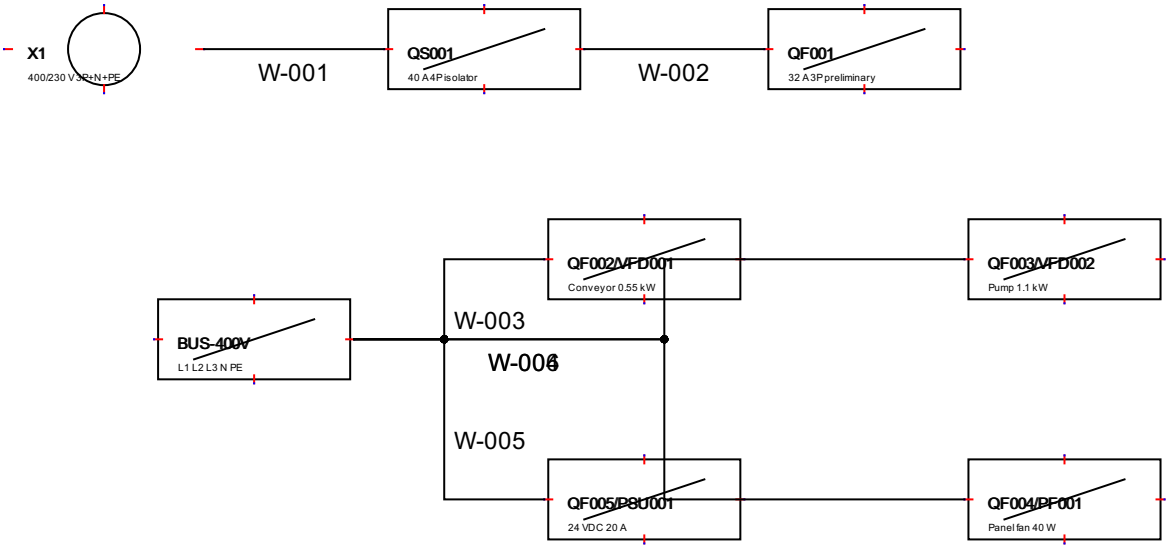

FICTIONAL CONCEPT DESIGN - NOT FOR CONSTRUCTION

Author : Principal electrical engineer - concept	Single-line power distribution	File : filling_cell.qet
Date :		Folio : 5/24

E-06 INCOMING ISOLATION AND BRANCH PROTECTION

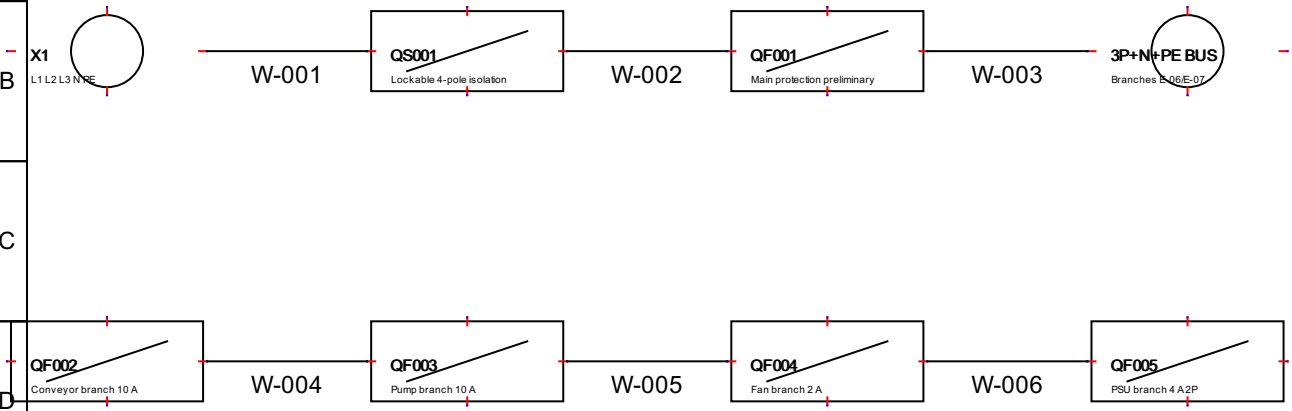

Breaking capacity, coordination, conductor ampacity and upstream protection require confirmed site data.

FICTIONAL CONCEPT DESIGN - NOT FOR CONSTRUCTION

Author : Principal electrical engineer - concept	Incoming isolation and branch protection	File : filling_cell.qet
Date :		Folio : 6/24

E-07 24 VDC PELV SUPPLY AND PROTECTED DISTRIBUTION

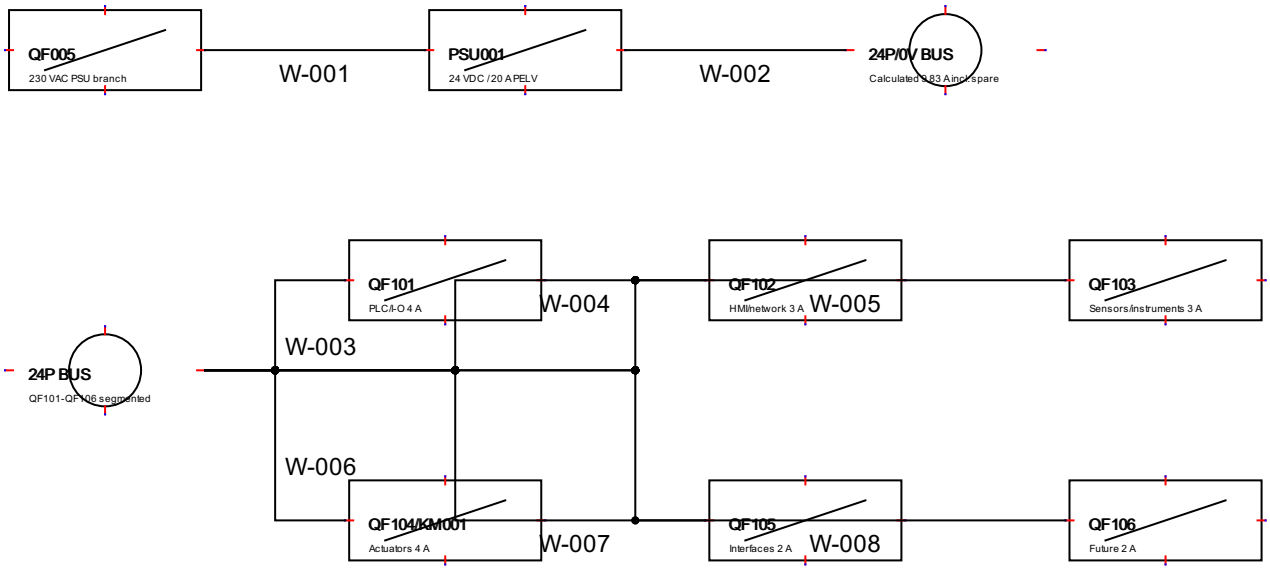

FICTIONAL CONCEPT DESIGN - NOT FOR CONSTRUCTION

Author : Principal electrical engineer - concept	24 VDC PELV supply and protected distribution	File : filling_cell.qet
Date :		Folio : 7/24

E-08 CONCEPTUAL SAFETY ARCHITECTURE

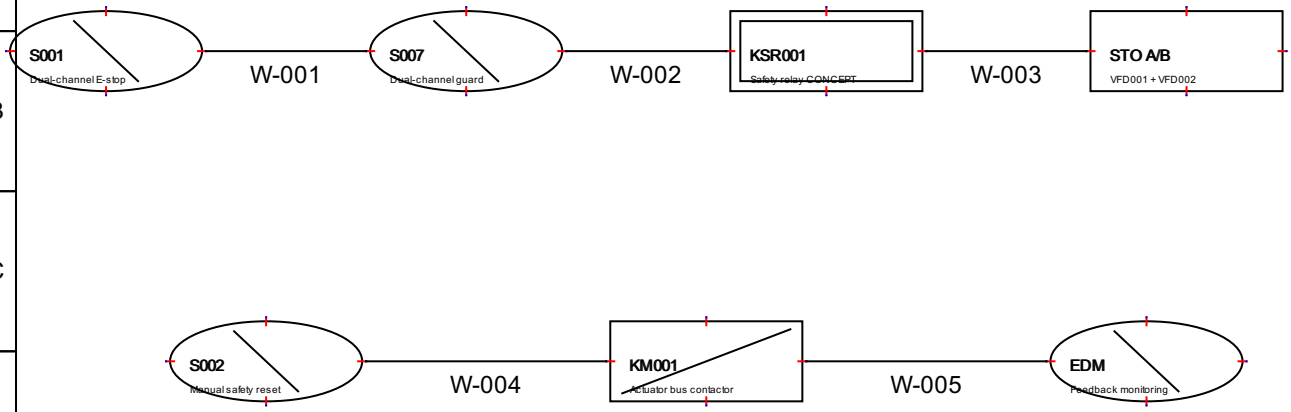

Standard PLC monitors status only. Restoration never starts motion. Required functions/performance are not determined here.

FICTIONAL CONCEPT DESIGN - NOT FOR CONSTRUCTION

CONCEPTUAL SAFETY ARCHITECTURE - REQUIRES REVIEW, RISK ASSESSMENT,
VERIFICATION AND VALIDATION BY A QUALIFIED MACHINERY-SAFETY ENGINEER.
NO PERFORMANCE LEVEL, SIL, CATEGORY OR REGULATORY COMPLIANCE IS CLAIMED.

Author : Principal electrical engineer - concept	Conceptual safety architecture	File : filling_cell.qet
Date :		Folio : 8/24

E-09 PLC, HMI, ETHERNET AND CONTROLLER POWER

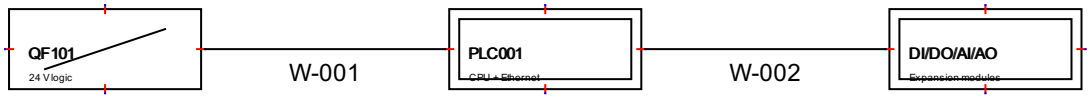

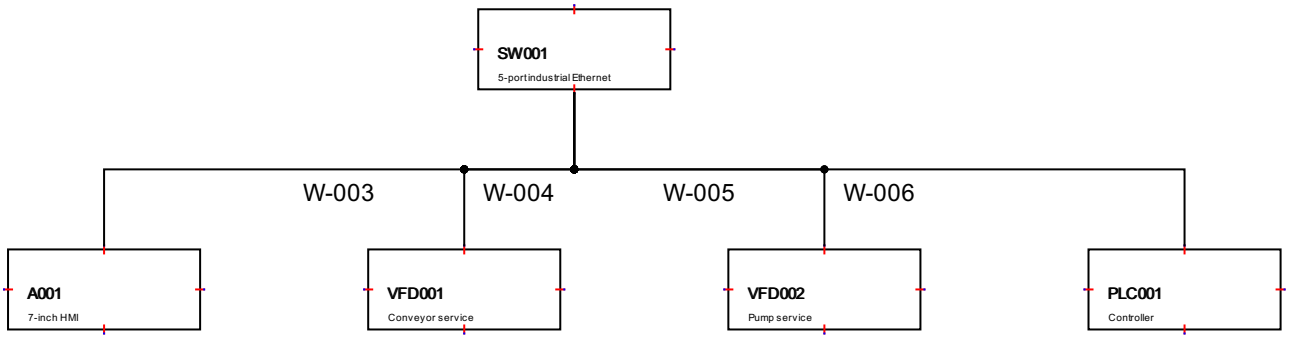

FICTIONAL CONCEPT DESIGN - NOT FOR CONSTRUCTION

Author : Principal electrical engineer - concept	PLC, HMI, Ethernet and controller power	File : filling_cell.qet
Date :		Folio : 9/24

E-10 PLC DIGITAL INPUTS - MODULE DI001

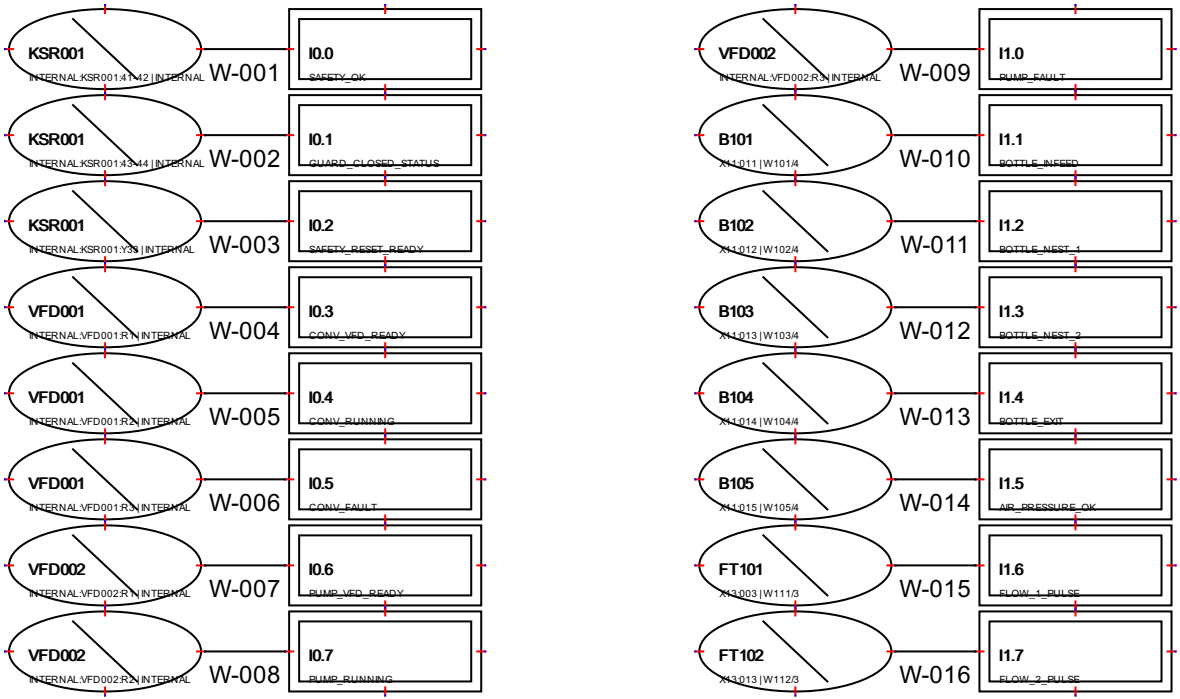

FICTIONAL CONCEPT DESIGN - NOT FOR CONSTRUCTION

Author : Principal electrical engineer - concept	PLC digital inputs - module DI001	File : filling_cell.qet
Date :		Folio : 10/24

E-11 PLC DIGITAL INPUTS - MODULE DI002

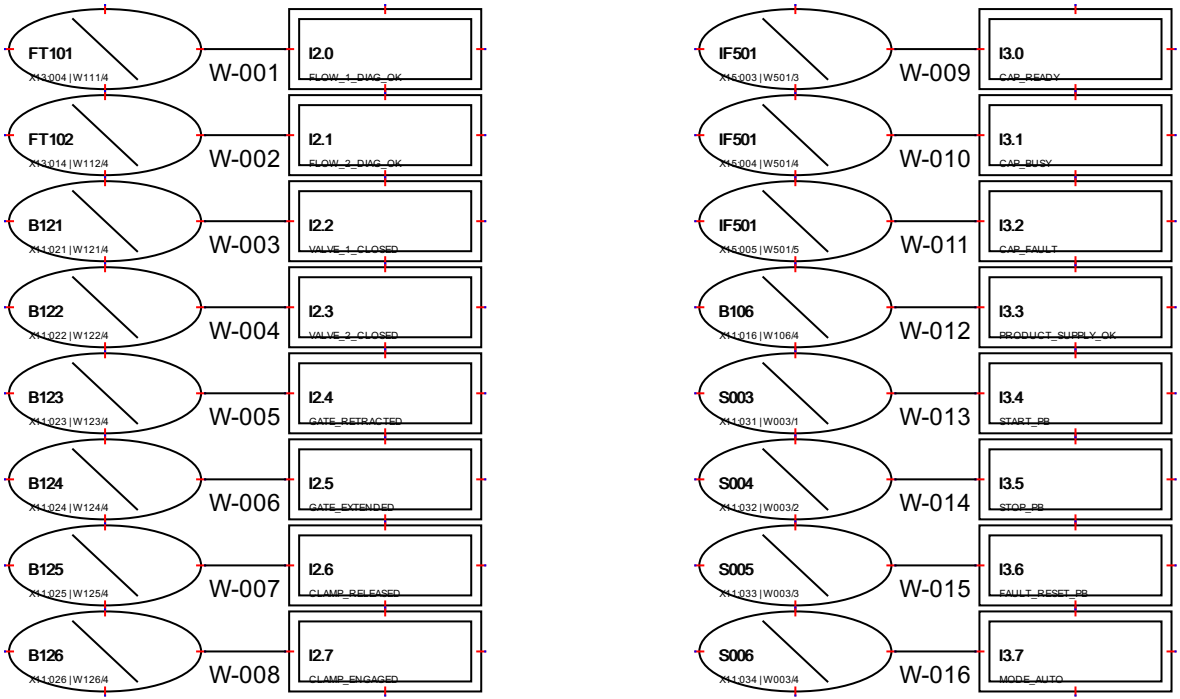

FICTIONAL CONCEPT DESIGN - NOT FOR CONSTRUCTION

Author : Principal electrical engineer - concept	PLC digital inputs - module DI002	File : filling_cell.qet
Date :		Folio : 11/24

E-12 PLC DIGITAL INPUTS - MODULE DI003 AND SPARES

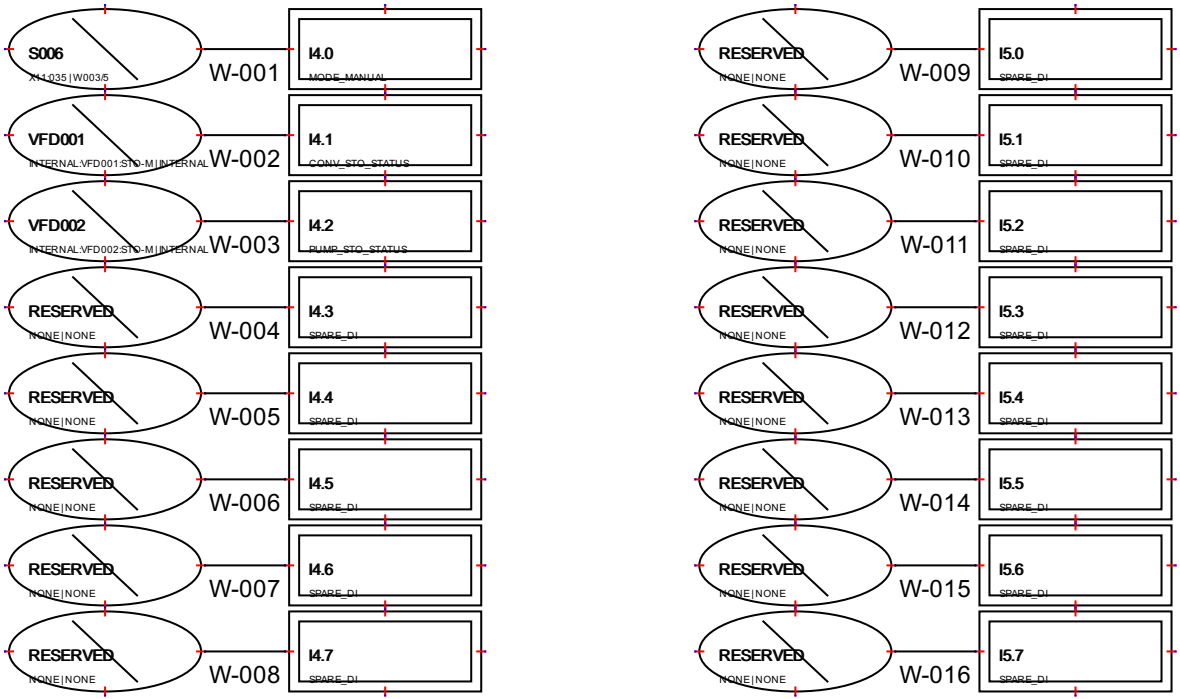

FICTIONAL CONCEPT DESIGN - NOT FOR CONSTRUCTION

Author : Principal electrical engineer - concept	PLC digital inputs - module DI003 and spares	File : filling_cell.qet
Date :		Folio : 12/24

E-13 PLC DIGITAL OUTPUTS - MODULE DO001

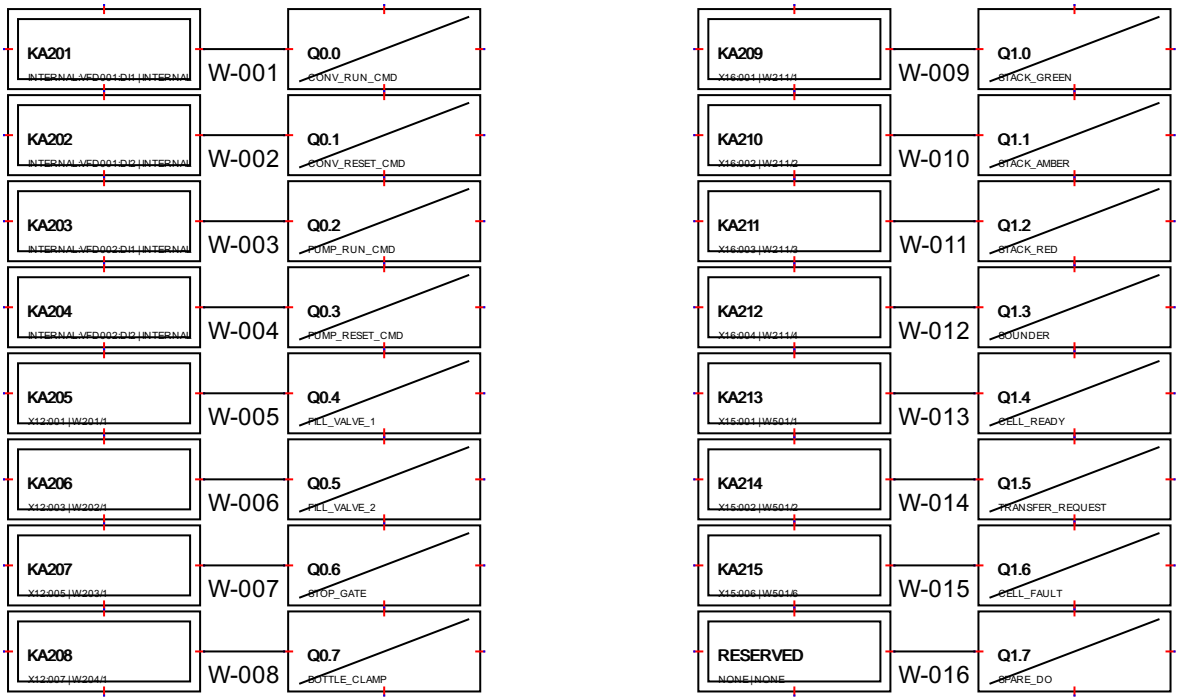

FICTIONAL CONCEPT DESIGN - NOT FOR CONSTRUCTION

Author : Principal electrical engineer - concept	PLC digital outputs - module DO001	File : filling_cell.qet
Date :		Folio : 13/24

E-14 PLC DIGITAL OUTPUTS - MODULE DO002 AND SPARES

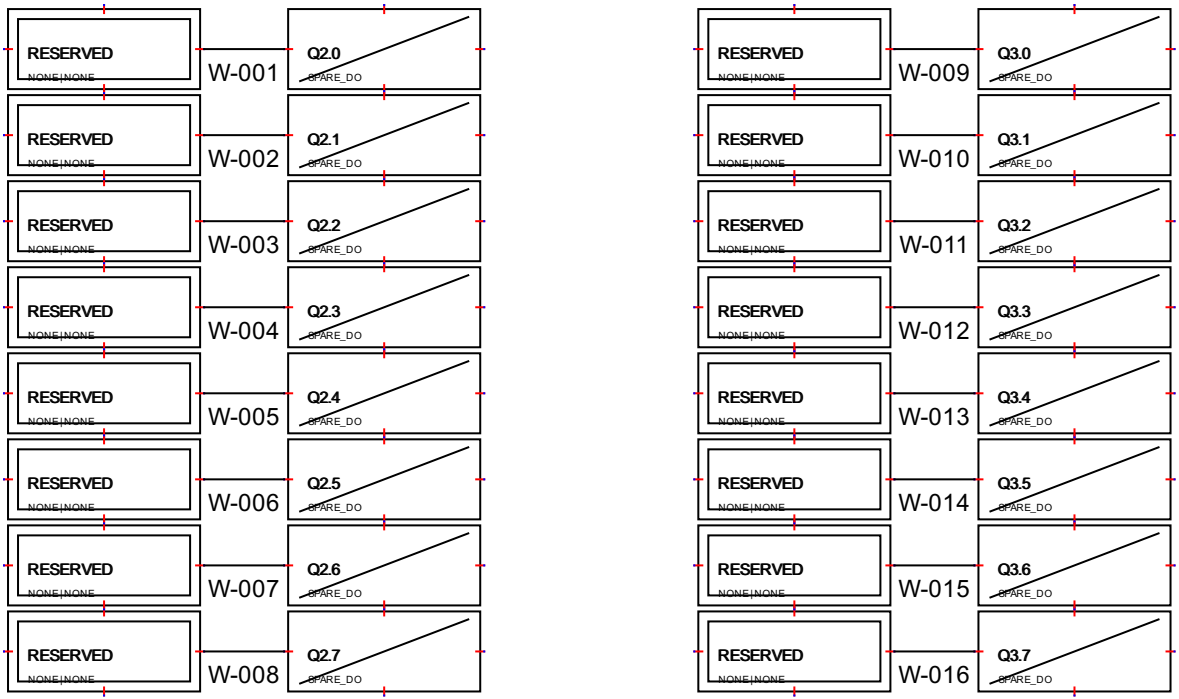

FICTIONAL CONCEPT DESIGN - NOT FOR CONSTRUCTION

Author : Principal electrical engineer - concept	PLC digital outputs - module DO002 and spares	File : filling_cell.qet
Date :		Folio : 14/24

E-15 PLC ANALOG INPUTS AND OUTPUTS

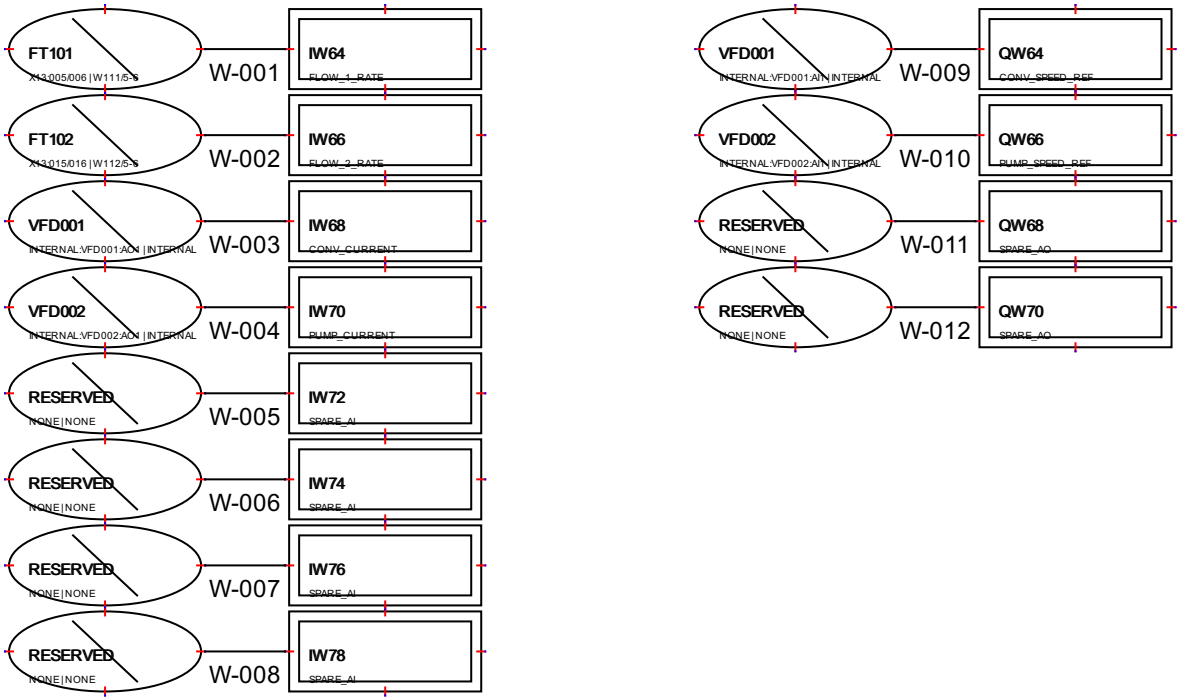

FICTIONAL CONCEPT DESIGN - NOT FOR CONSTRUCTION

Author : Principal electrical engineer - concept	PLC analog inputs and outputs	File : filling_cell.qet
Date :		Folio : 15/24

E-16 CONVEYOR VFD CONTROL AND POWER WIRING

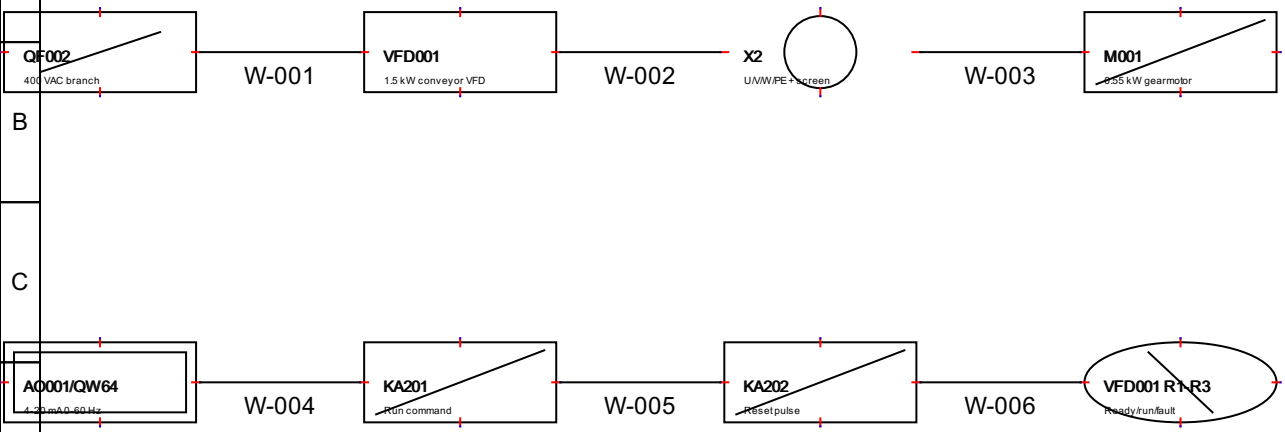

VFD line and motor sides are distinct. STO is on E-08; shield is 360-degree bonded at panel and motor.

FICTIONAL CONCEPT DESIGN - NOT FOR CONSTRUCTION

Author : Principal electrical engineer - concept	Conveyor VFD control and power wiring	File : filling_cell.qet
Date :		Folio : 16/24

E-17 CONVEYOR MOTOR, PE AND SHIELD TERMINATION

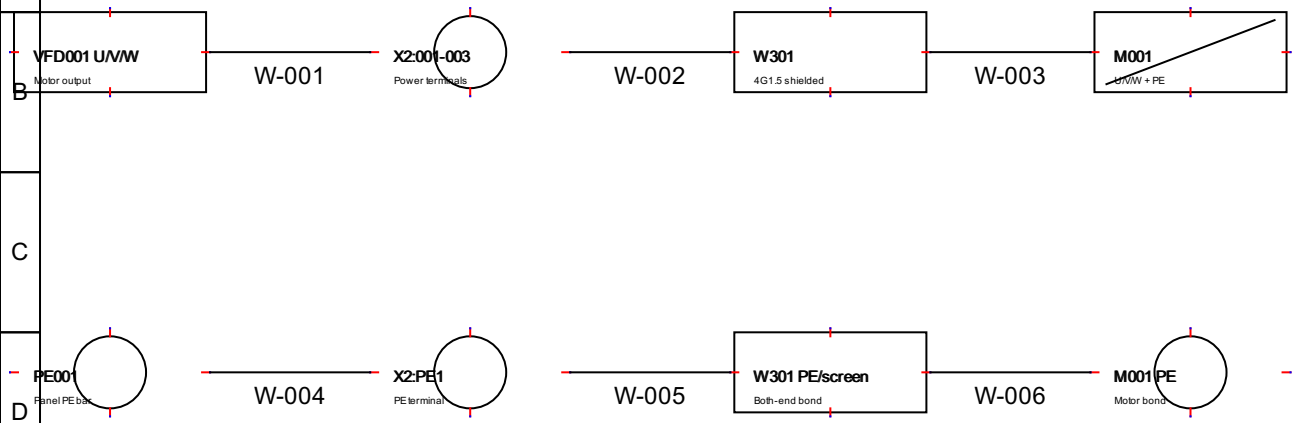

FICTIONAL CONCEPT DESIGN - NOT FOR CONSTRUCTION

Author : Principal electrical engineer - concept	Conveyor motor, PE and shield termination	File : filling_cell.qet
Date :		Folio : 17/24

E-18 DOSING-PUMP VFD AND MOTOR INTERFACE

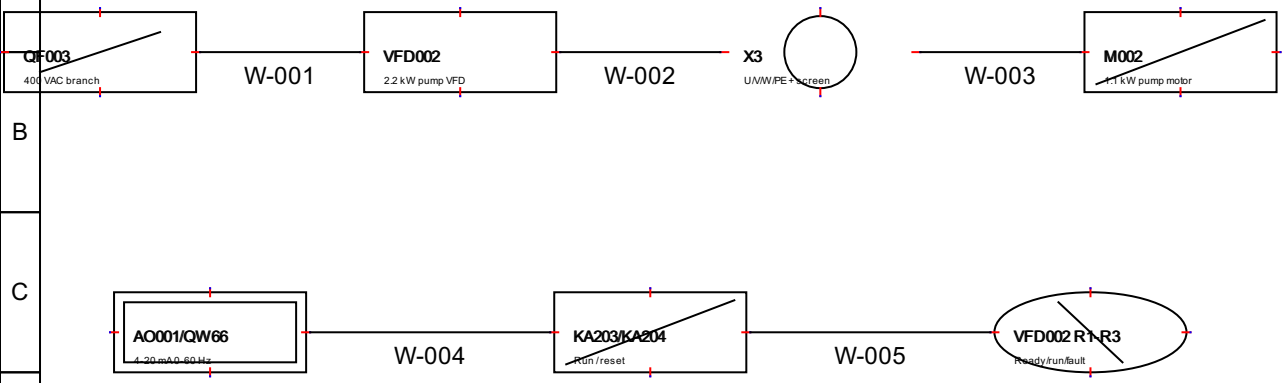

Pump must not dead-head. Electrical stop logic is not a substitute for process relief/bypass assessment.

FICTIONAL CONCEPT DESIGN - NOT FOR CONSTRUCTION

Author : Principal electrical engineer - concept	Dosing-pump VFD and motor interface	File : filling_cell.qet
Date :		Folio : 18/24

E-19 TWO-CHANNEL FILLING VALVES AND FLOW INSTRUMENTATION

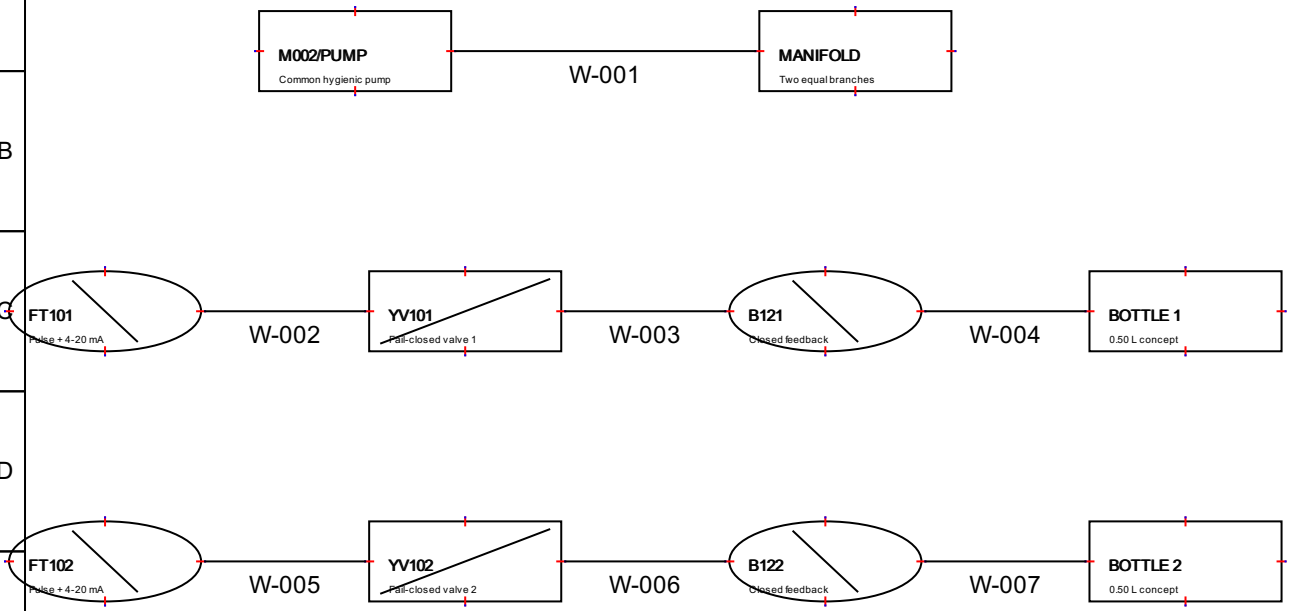

FICTIONAL CONCEPT DESIGN - NOT FOR CONSTRUCTION

Author : Principal electrical engineer - concept	Two-channel filling valves and flow instrumentation	File : filling_cell.qet
Date :		Folio : 19/24

E-20 BOTTLE, GATE, CLAMP, AIR AND PRODUCT SENSORS

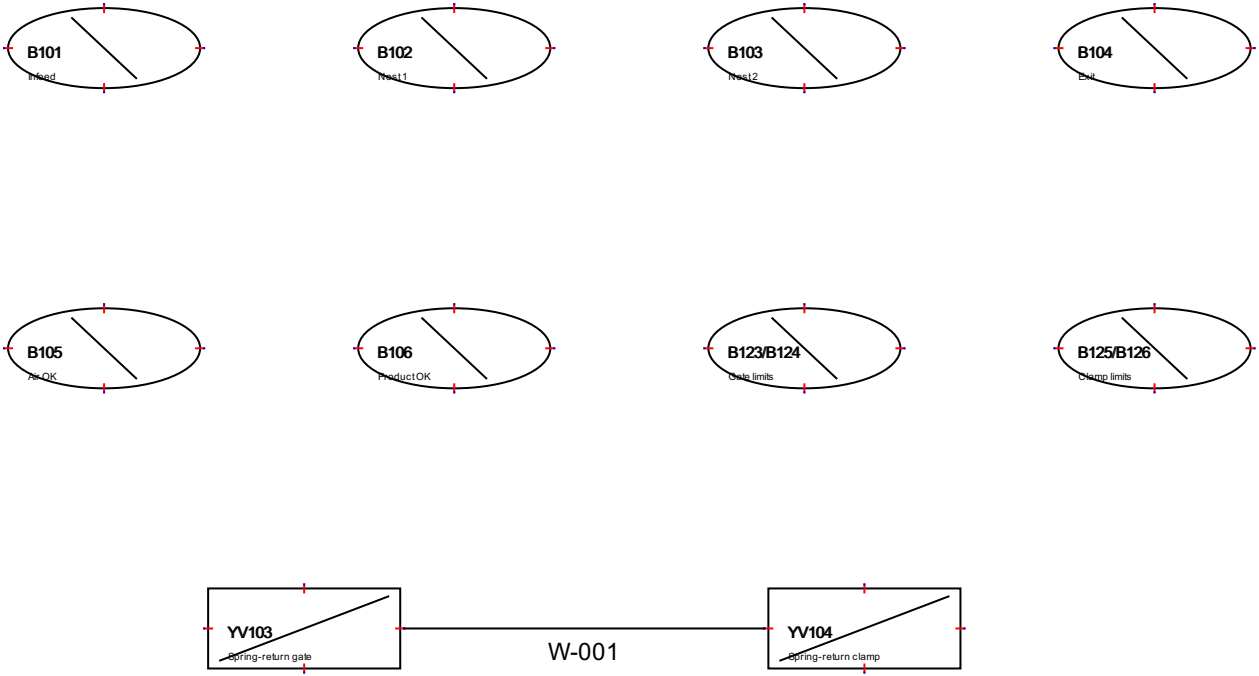

FICTIONAL CONCEPT DESIGN - NOT FOR CONSTRUCTION

Author : Principal electrical engineer - concept	Bottle, gate, clamp, air and product sensors	File : filling_cell.qet
Date :		Folio : 20/24

E-21 HMI, STACK LIGHT AND CAPPING-STATION INTERFACE

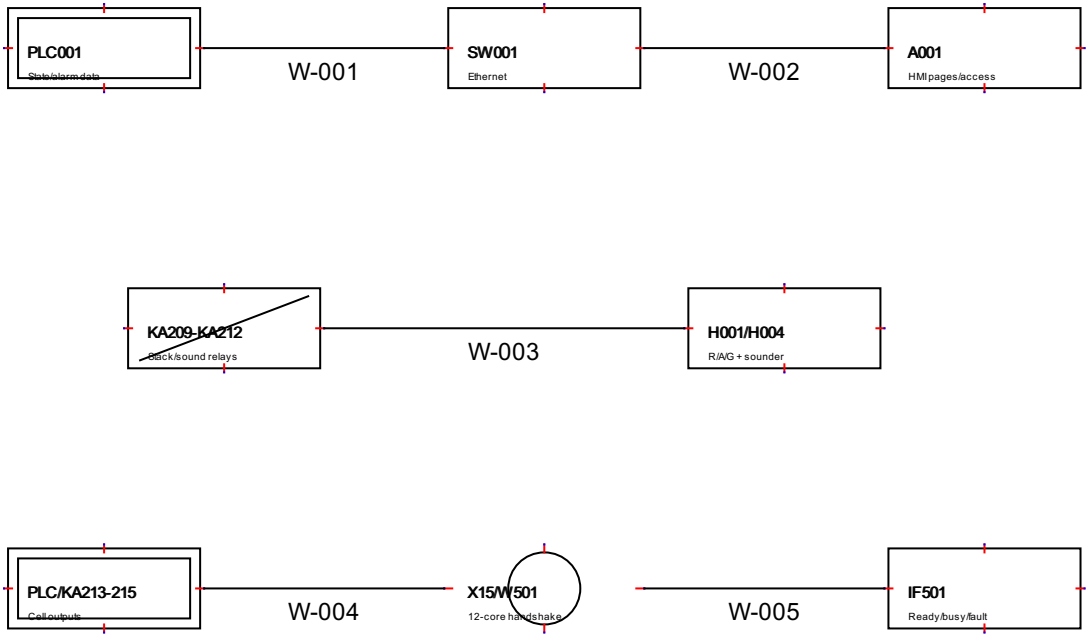

FICTIONAL CONCEPT DESIGN - NOT FOR CONSTRUCTION

Author : Principal electrical engineer - concept	HMI, stack light and capping-station interface	File : filling_cell.qet
Date :		Folio : 21/24

E-22 TERMINAL-STRIP PLAN AND FIELD CONNECTIONS

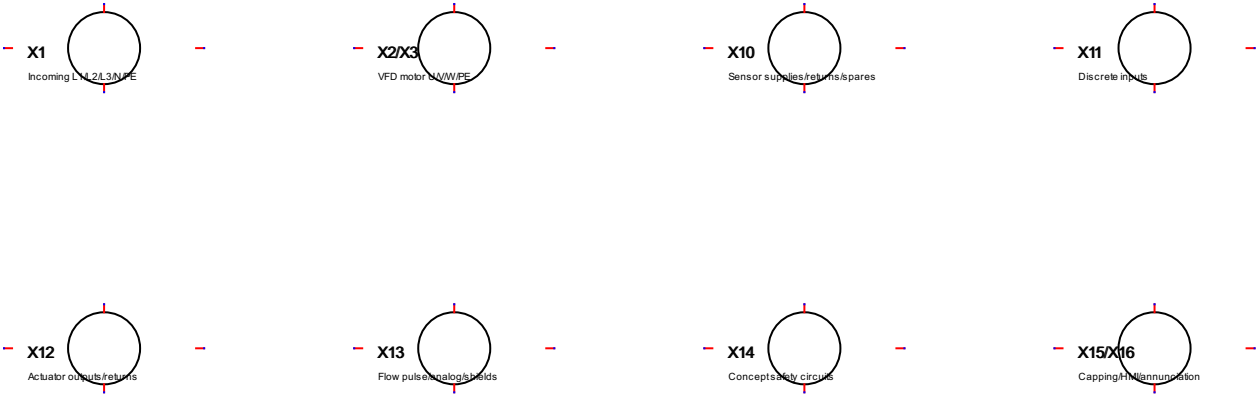

Canonical terminal plan contains 133 core/terminal records. Field and panel sides are explicit in the schedule.

FICTIONAL CONCEPT DESIGN - NOT FOR CONSTRUCTION

E-23 CABLE OVERVIEW, EMC AND SEGREGATION NOTES

W001-W003
Safety/operator control

W101-W126
PNP sensor cables

W111-W112
Shielded flow instrument

W201-W211
Actuators/annunciation

W301-W302
Shielded VFD motor

W401-W402
HMI network/power

W501
Capping handshake

Segregate VFD outputs from 24 VDC and instrument wiring. Terminate shields exactly as scheduled; final routing/length/derating remain open.

FICTIONAL CONCEPT DESIGN - NOT FOR CONSTRUCTION

E-24 SPARE CAPACITY, GENERAL NOTES AND COMMISSIONING PREREQUISITES

GENERAL: final device selections, fault-current/coordination, conductor sizes, voltage drop, EMC and thermal analysis require project data.

NETWORK: Ethernet loss does not substitute for hardwired stop; PLC controls drives through hardwired commands and analog references.

COMMISSIONING: test every I/O point, scaling, sensor, valve, drive, handshake, restart and fault response before process use.

SAFETY: this drawing only describes a conceptual boundary. Qualified risk assessment, verification and validation remain mandatory.

FICTIONAL CONCEPT DESIGN - NOT FOR CONSTRUCTION

CONCEPTUAL SAFETY ARCHITECTURE - REQUIRES REVIEW, RISK ASSESSMENT,
VERIFICATION AND VALIDATION BY A QUALIFIED MACHINERY-SAFETY ENGINEER.
NO PERFORMANCE LEVEL, SIL, CATEGORY OR REGULATORY COMPLIANCE IS CLAIMED.