Stat 256: Causality

Causal Graphs and Causal Structural Models

Chad Hazlett

UCLA

chazlett@ucla.edu

Spring 2026

Resources for this material

Today we will just get our feet wet, but for the DAG material in general:

Required reading:

- *What if* (Hernan and Robins), Chapters 6, 7.
- *Primer* (Pearl, Glymour, Jewell), Chapters 1.4, 1.5, 2, 3.

Resources for this material

Today we will just get our feet wet, but for the DAG material in general:

Required reading:

- *What if* (Hernan and Robins), Chapters 6, 7.
- *Primer* (Pearl, Glymour, Jewell), Chapters 1.4, 1.5, 2, 3.

Other suggestions:

- Pearl, J. (2009). *Causality*

Resources for this material

Today we will just get our feet wet, but for the DAG material in general:

Required reading:

- *What if* (Hernan and Robins), Chapters 6, 7.
- *Primer* (Pearl, Glymour, Jewell), Chapters 1.4, 1.5, 2, 3.

Other suggestions:

- Pearl, J. (2009). *Causality*
- Some online materials:
  - *Causal Diagrams: Draw Your Assumptions Before Your Conclusions* course by Miguel Hernan on EdX
  - *A Crash Course in Causality: Inferring Causal Effects from Observational Data* course by Jason Roy on Coursera.
  - Richard McElreath lecture on "Science before statistics: causal inference".
    `https://www.youtube.com/watch?v=KNPYUVmY3NM&t=8565s`

Goals for this lecture

- Motivation: Why do we need causal structure to make sense of data?

Goals for this lecture

- Motivation: Why do we need causal structure to make sense of data?
- Introduction to structural causal models (SCMs) and their graphs

Goals for this lecture

- Motivation: Why do we need causal structure to make sense of data?
- Introduction to structural causal models (SCMs) and their graphs
- Graph basics: Conditional independence and d-separation

Why we need causal structure

Suppose people self-select into taking a new drug. You find:

Why we need causal structure

Suppose people self-select into taking a new drug. You find:

	Outcome: Recovery	
	Drug	No Drug
Mild	81 of 87 (93%)	234 of 270 (87%)
Severe	192 of 263 (73%)	55 of 80 (69%)
Combined	273 of 350 (78%)	289 of 350 (83%)

Why we need causal structure

Suppose people self-select into taking a new drug. You find:

	Outcome: Recovery	
	Drug	No Drug
Mild	81 of 87 (93%)	234 of 270 (87%)
Severe	192 of 263 (73%)	55 of 80 (69%)
Combined	273 of 350 (78%)	289 of 350 (83%)

- Among mild cases, those on the drug did better (93% vs. 87%)

Why we need causal structure

Suppose people self-select into taking a new drug. You find:

	Outcome: Recovery	
	Drug	No Drug
Mild	81 of 87 (93%)	234 of 270 (87%)
Severe	192 of 263 (73%)	55 of 80 (69%)
Combined	273 of 350 (78%)	289 of 350 (83%)

- Among mild cases, those on the drug did better (93% vs. 87%)
- Among severe cases, those on the drug did better (73% vs. 69%)

Why we need causal structure

Suppose people self-select into taking a new drug. You find:

	Outcome: Recovery	
	Drug	No Drug
Mild	81 of 87 (93%)	234 of 270 (87%)
Severe	192 of 263 (73%)	55 of 80 (69%)
Combined	273 of 350 (78%)	289 of 350 (83%)

- Among mild cases, those on the drug did better (93% vs. 87%)
- Among severe cases, those on the drug did better (73% vs. 69%)
- But in the combined data, people did *worse* on the drug (78% vs. 83%)

Why we need causal structure

Suppose people self-select into taking a new drug. You find:

	Outcome: Recovery	
	Drug	No Drug
Mild	81 of 87 (93%)	234 of 270 (87%)
Severe	192 of 263 (73%)	55 of 80 (69%)
Combined	273 of 350 (78%)	289 of 350 (83%)

- Among mild cases, those on the drug did better (93% vs. 87%)
- Among severe cases, those on the drug did better (73% vs. 69%)
- But in the combined data, people did *worse* on the drug (78% vs. 83%)

Which comparison answers the causal question?

What's going on? Confounding

	Outcome: Recovery	
	Drug	No Drug
Mild	81 of 87 (93%)	234 of 270 (87%)
Severe	192 of 263 (73%)	55 of 80 (69%)
Combined	273 of 350 (78%)	289 of 350 (83%)

What's going on? Confounding

	Outcome: Recovery	
	Drug	No Drug
Mild	81 of 87 (93%)	234 of 270 (87%)
Severe	192 of 263 (73%)	55 of 80 (69%)
Combined	273 of 350 (78%)	289 of 350 (83%)

- Severe cases have lower recovery rates *and* are more likely to take drug.

What's going on? Confounding

	Outcome: Recovery	
	Drug	No Drug
Mild	81 of 87 (93%)	234 of 270 (87%)
Severe	192 of 263 (73%)	55 of 80 (69%)
Combined	273 of 350 (78%)	289 of 350 (83%)

- Severe cases have lower recovery rates *and* are more likely to take drug.

What's going on? Confounding

	Outcome: Recovery	
	Drug	No Drug
Mild	81 of 87 (93%)	234 of 270 (87%)
Severe	192 of 263 (73%)	55 of 80 (69%)
Combined	273 of 350 (78%)	289 of 350 (83%)

- Severe cases have lower recovery rates *and* are more likely to take drug.
- So the drug group is disproportionately severe cases, dragging down its average — classic confounding.

What's going on? Confounding

	Outcome: Recovery	
	Drug	No Drug
Mild	81 of 87 (93%)	234 of 270 (87%)
Severe	192 of 263 (73%)	55 of 80 (69%)
Combined	273 of 350 (78%)	289 of 350 (83%)

- Severe cases have lower recovery rates *and* are more likely to take drug.
- So the drug group is disproportionately severe cases, dragging down its average — classic confounding.

Knowing to condition on severity here required a causal judgment: that severity is a common cause of drug-taking and recovery.

What's going on? Confounding

	Outcome: Recovery	
	Drug	No Drug
Mild	81 of 87 (93%)	234 of 270 (87%)
Severe	192 of 263 (73%)	55 of 80 (69%)
Combined	273 of 350 (78%)	289 of 350 (83%)

- Severe cases have lower recovery rates *and* are more likely to take drug.
- So the drug group is disproportionately severe cases, dragging down its average — classic confounding.

Knowing to condition on severity here required a causal judgment: that severity is a common cause of drug-taking and recovery.

Thus knowing what to do – and the answer you get – depends on the analyst's beliefs about causal structure.

Encoding causal assumptions

In this example, our assumption is:

1. Severity influences both recovery and drug-taking, and
2. no other factor creates a spurious association between drug-taking and recovery.

Encoding causal assumptions

In this example, our assumption is:

1. Severity influences both recovery and drug-taking, and
2. no other factor creates a spurious association between drug-taking and recovery.

We encode this with a DAG:

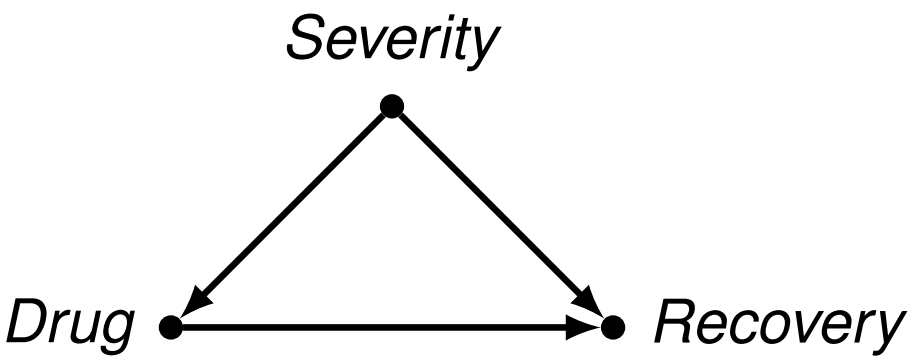

Encoding causal assumptions

In this example, our assumption is:

1. Severity influences both recovery and drug-taking, and
2. no other factor creates a spurious association between drug-taking and recovery.

We encode this with a DAG:

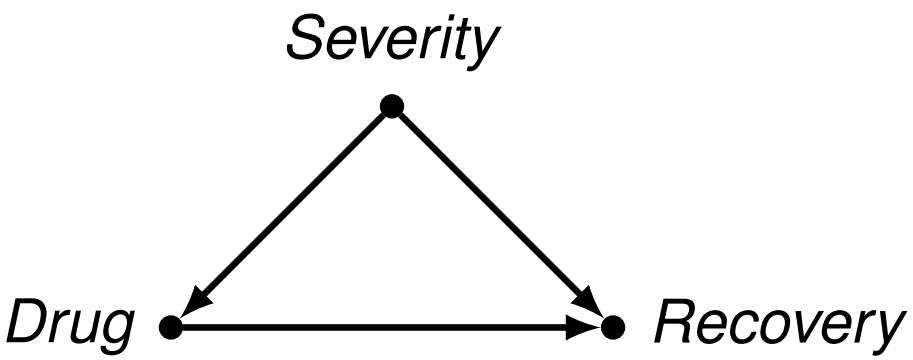

Preview: this graph shows us that conditioning on Severity removes the confounding, isolates the effect of Drug on Recovery.

Structural Causal Models

Let's now formalize what we mean by "causal structure."

Structural Causal Models

Let's now formalize what we mean by "causal structure."

Structural Causal Models (SCMs) specify a set of causal relationships. They consist of:

- a group of observed variables
- a group of unobserved exogenous variables, $\{U\}$
- functions that relate them, $f_{(\cdot)}$
- an assumed distribution over the exogenous variables, $p(U)$.

E.g.,

$$
\begin{aligned}
X &= f_x(U_x) \\
A &= f_a(X, U_a) \\
Y &= f_y(X, A, U_y) \\
U_y &\perp\!\!\!\perp U_x, \;\; U_y \perp\!\!\!\perp U_a
\end{aligned}
$$

where "exogenous" ancestors, $U = \{U_x, U_a, U_y\}$ with $U \sim p(u)$.

Life in an SCM

Note that:

- $\{f_x, f_a, f_y\}$ make no parametric commitments.
- Each expression has a causal ("structural") meaning, not just algebraic.
- "X causes Y" means Y's function depends on X

Life in an SCM

Note that:

- $\{f_x, f_a, f_y\}$ make no parametric commitments.
- Each expression has a causal ("structural") meaning, not just algebraic.
- "X causes Y" means Y's function depends on X

SCMs impose a deterministic, "clockwork" notion of causation:

Life in an SCM

Note that:

- $\{f_x, f_a, f_y\}$ make no parametric commitments.
- Each expression has a causal ("structural") meaning, not just algebraic.
- "X causes Y" means Y's function depends on X

SCMs impose a deterministic, "clockwork" notion of causation:

- Population: The distribution $p(U)$ implies a distribution p(observables).

Life in an SCM

Note that:

- $\{f_x, f_a, f_y\}$ make no parametric commitments.
- Each expression has a causal ("structural") meaning, not just algebraic.
- "X causes Y" means Y's function depends on X

SCMs impose a deterministic, "clockwork" notion of causation:

- Population: The distribution $p(U)$ implies a distribution p(observables).
- Individuals: If you knew all the values of U for a given unit and the details of every f, you would know the exact values of every variable.

Life in an SCM

Note that:

- $\{f_x, f_a, f_y\}$ make no parametric commitments.
- Each expression has a causal ("structural") meaning, not just algebraic.
- "X causes Y" means Y's function depends on X

SCMs impose a deterministic, "clockwork" notion of causation:

- Population: The distribution $p(U)$ implies a distribution p(observables).
- Individuals: If you knew all the values of U for a given unit and the details of every f, you would know the exact values of every variable.
- Modularity/invariance: each function f_j does not depend on how its inputs were produced. If you *intervene* and set $A = a$, the downstream functions still apply as usual. We will use this when we discuss interventions.

SCM to Graph

For a model M such as:

$$X = f_x(U_x)$$
$$A = f_a(X, U_a)$$
$$Y = f_y(X, A, U_y)$$
$$U_y \perp\!\!\!\perp U_x, \;\; U_y \perp\!\!\!\perp U_a$$

It is convenient to draw a graph, G:

SCM to Graph

For a model M such as:

$$X = f_x(U_x)$$
$$A = f_a(X, U_a)$$
$$Y = f_y(X, A, U_y)$$
$$U_y \perp\!\!\!\perp U_x, \; U_y \perp\!\!\!\perp U_a$$

It is convenient to draw a graph, G:

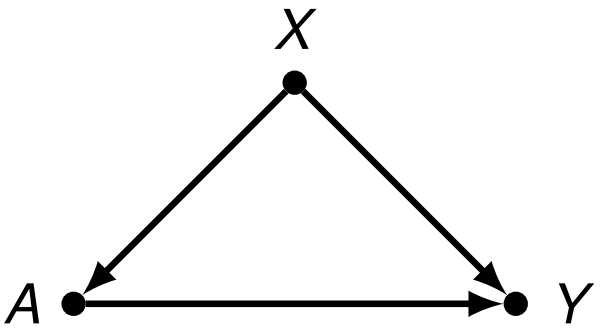

SCM to Graph

For a model M such as:

$$X = f_x(U_x)$$
$$A = f_a(X, U_a)$$
$$Y = f_y(X, A, U_y)$$
$$U_y \perp\!\!\!\perp U_x, \;\; U_y \perp\!\!\!\perp U_a$$

It is convenient to draw a graph, G:

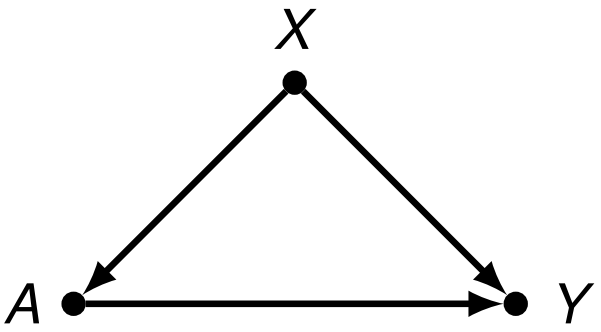

- Arrows go into a node only if the corresponding argument enters the corresponding function in the SCM.

SCM to Graph

For a model M such as:

$$X = f_x(U_x)$$
$$A = f_a(X, U_a)$$
$$Y = f_y(X, A, U_y)$$
$$U_y \perp\!\!\!\perp U_x, \;\; U_y \perp\!\!\!\perp U_a$$

It is convenient to draw a graph, G:

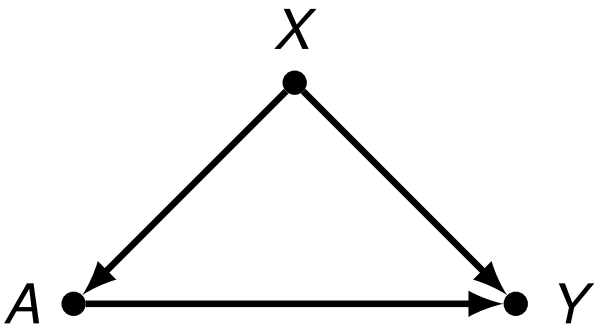

- Arrows go into a node only if the corresponding argument enters the corresponding function in the SCM.
- You could show U_j pointing to each j, but usually omit these.

Missing edges, bidirected arcs

A missing edge means the value of A is not an argument into Y. *It's the missing edges that matter for the arguments we will need to make.*

Missing edges, bidirected arcs

A missing edge means the value of A is not an argument into Y. *It's the missing edges that matter for the arguments we will need to make.*

Some authors show unobserved common causes as a bidirected arc.

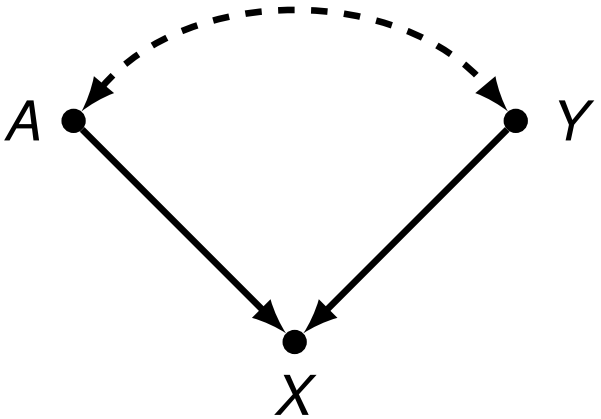

Terminology

1. nodes, vertices: the variables that are written

Terminology

1. nodes, vertices: the variables that are written
2. edges, arrows: the lines, may be “directed” or “bidirected” (arcs)

Terminology

1. nodes, vertices: the variables that are written
2. edges, arrows: the lines, may be “directed” or “bidirected” (arcs)
3. parents: for a given node, the causes feeding into it

Terminology

1. nodes, vertices: the variables that are written
2. edges, arrows: the lines, may be “directed” or “bidirected” (arcs)
3. parents: for a given node, the causes feeding into it
4. root nodes: a node with no (endogenous) parents on the graph

Terminology

1. nodes, vertices: the variables that are written
2. edges, arrows: the lines, may be “directed” or “bidirected” (arcs)
3. parents: for a given node, the causes feeding into it
4. root nodes: a node with no (endogenous) parents on the graph
5. descendants, children: effects of a given cause

Terminology

1. nodes, vertices: the variables that are written
2. edges, arrows: the lines, may be “directed” or “bidirected” (arcs)
3. parents: for a given node, the causes feeding into it
4. root nodes: a node with no (endogenous) parents on the graph
5. descendants, children: effects of a given cause
6. paths: any series of connected nodes, regardless of direction
7. **D**irected **A**cyclic **G**raph: a graph where all edges are directed and you can never follow directed paths from a node back to itself.

Factorization

Markov condition: Each node listens only to its parents. For some node X, its parents (PA) and non-parent, non-descendants Q,

$$p(X|PA, Q) = p(X|PA)$$

Factorization

Markov condition: Each node listens only to its parents. For some node X, its parents (PA) and non-parent, non-descendants Q,

$$p(X|PA, Q) = p(X|PA)$$

We'll often use this to see what should be conditionally independent,

$$X \perp\!\!\!\perp Q \mid PA$$

Factorization

Markov condition: Each node listens only to its parents. For some node X, its parents (PA) and non-parent, non-descendants Q,

$$p(X|PA, Q) = p(X|PA)$$

We'll often use this to see what should be conditionally independent,

$$X \perp\!\!\!\perp Q \mid PA$$

Further, this allows "Markov factorization" of the joint distribution:

Rule

Product Decomposition (Pearl & Verma 1991): for any model M whose graph G is acyclic and without dependent unobserved causes (i.e. no bidirected arcs; Markovian), the joint distribution of variables in the model is given by

$$P(X_1, X_2, ..., X_n) = \prod_i P(X_i|PA_i)$$

where PA_i denotes the parents of X_i

Example of Product Decomposition

$$A \longrightarrow B \longrightarrow C$$

What is $P(A, B, C)$?

Example of Product Decomposition

$$A \longrightarrow B \longrightarrow C$$

What is $P(A, B, C)$?

Without the graph, you could always write

$$P(A, B, C) = P(A)P(B|A)P(C|B, A)$$

Example of Product Decomposition

$$A \longrightarrow B \longrightarrow C$$

What is $P(A, B, C)$?

Without the graph, you could always write

$$P(A, B, C) = P(A)P(B|A)P(C|B, A)$$

With the graph we can write:

$$P(A, B, C) = P(A)P(B|A)P(C|B)$$

Paths, dependencies, and information

A first use of graphs is to get a handle on what observables will be conditionally or marginally associated with what others.

Paths, dependencies, and information

A first use of graphs is to get a handle on what observables will be conditionally or marginally associated with what others.

Three key structures: forks, chains, colliders

Chain:

$$A \longrightarrow B \longrightarrow C$$

Paths, dependencies, and information

A first use of graphs is to get a handle on what observables will be conditionally or marginally associated with what others.

Three key structures: forks, chains, colliders

Chain:

$$A \longrightarrow B \longrightarrow C$$

Implications:

Paths, dependencies, and information

A first use of graphs is to get a handle on what observables will be conditionally or marginally associated with what others.

Three key structures: forks, chains, colliders

Chain:

$$A \longrightarrow B \longrightarrow C$$

Implications:

$A \perp\!\!\!\perp C$?

Paths, dependencies, and information

A first use of graphs is to get a handle on what observables will be conditionally or marginally associated with what others.

Three key structures: forks, chains, colliders

Chain:

$$A \longrightarrow B \longrightarrow C$$

Implications:

$A \perp\!\!\!\perp C$? No — A influences C through B.

Paths, dependencies, and information

A first use of graphs is to get a handle on what observables will be conditionally or marginally associated with what others.

Three key structures: forks, chains, colliders

Chain:

$$A \longrightarrow B \longrightarrow C$$

Implications:

$A \perp\!\!\!\perp C$? No — A influences C through B.

$A \perp\!\!\!\perp C | B$?

Paths, dependencies, and information

A first use of graphs is to get a handle on what observables will be conditionally or marginally associated with what others.

Three key structures: forks, chains, colliders

Chain:

$$A \longrightarrow B \longrightarrow C$$

Implications:

$A \perp\!\!\!\perp C$? No — A influences C through B.

$A \perp\!\!\!\perp C | B$? Yes — conditioning on B blocks the chain.

Paths, dependencies, and information

A first use of graphs is to get a handle on what observables will be conditionally or marginally associated with what others.

Three key structures: forks, chains, colliders

Chain:

$$A \longrightarrow B \longrightarrow C$$

Implications:

$A \perp\!\!\!\perp C$? No — A influences C through B.

$A \perp\!\!\!\perp C | B$? Yes — conditioning on B blocks the chain.

$B \perp\!\!\!\perp C | A$?

Paths, dependencies, and information

A first use of graphs is to get a handle on what observables will be conditionally or marginally associated with what others.

Three key structures: forks, chains, colliders

Chain:

$$A \longrightarrow B \longrightarrow C$$

Implications:

$A \perp\!\!\!\perp C$? No — A influences C through B.

$A \perp\!\!\!\perp C | B$? Yes — conditioning on B blocks the chain.

$B \perp\!\!\!\perp C | A$? No — B still directly causes C.

Paths, dependencies, and information

Fork (aka common cause):

$$A \longleftarrow B \longrightarrow C$$

Paths, dependencies, and information

Fork (aka common cause):

$$A \longleftarrow B \longrightarrow C$$

Implications:

Paths, dependencies, and information

Fork (aka common cause):

$$A \longleftarrow B \longrightarrow C$$

Implications:

$A \perp\!\!\!\perp C$?

Paths, dependencies, and information

Fork (aka common cause):

$$A \longleftarrow B \longrightarrow C$$

Implications:

$A \perp\!\!\!\perp C$? No — the common cause B induces association.

Paths, dependencies, and information

Fork (aka common cause):

$$A \longleftarrow B \longrightarrow C$$

Implications:

$A \perp\!\!\!\perp C$? No — the common cause B induces association.

$A \perp\!\!\!\perp C | B$?

Paths, dependencies, and information

Fork (aka common cause):

$$A \longleftarrow B \longrightarrow C$$

Implications:

$A \perp\!\!\!\perp C$? No — the common cause B induces association.

$A \perp\!\!\!\perp C | B$? Yes — conditioning on the common cause blocks it.

Paths, dependencies, and information

Fork (aka common cause):

$$A \longleftarrow B \longrightarrow C$$

Implications:

$A \perp\!\!\!\perp C$? No — the common cause B induces association.

$A \perp\!\!\!\perp C | B$? Yes — conditioning on the common cause blocks it.

$B \perp\!\!\!\perp C | A$?

Paths, dependencies, and information

Fork (aka common cause):

$$A \longleftarrow B \longrightarrow C$$

Implications:

$A \perp\!\!\!\perp C$? No — the common cause B induces association.

$A \perp\!\!\!\perp C | B$? Yes — conditioning on the common cause blocks it.

$B \perp\!\!\!\perp C | A$? No — B still directly causes C.

Paths, dependencies, and information

Collider:

$$A \longrightarrow B \longleftarrow C$$

Paths, dependencies, and information

Collider:

$$A \longrightarrow B \longleftarrow C$$

$A \perp\!\!\!\perp C$?

Paths, dependencies, and information

Collider:

$$A \longrightarrow B \longleftarrow C$$

$A \perp\!\!\!\perp C$? Yes — no common cause, no causal path.

Paths, dependencies, and information

Collider:

$$A \longrightarrow B \longleftarrow C$$

$A \perp\!\!\!\perp C$? Yes — no common cause, no causal path.

$A \perp\!\!\!\perp C | B$?

Paths, dependencies, and information

Collider:

$$A \longrightarrow B \longleftarrow C$$

$A \perp\!\!\!\perp C$? Yes — no common cause, no causal path.

$A \perp\!\!\!\perp C | B$? No! — conditioning on the collider *opens* a path.

Beware colliders!

Paths, dependencies, and information

Collider:

$$A \longrightarrow B \longleftarrow C$$

$A \perp\!\!\!\perp C$? Yes — no common cause, no causal path.

$A \perp\!\!\!\perp C | B$? No! — conditioning on the collider *opens* a path.

$B \perp\!\!\!\perp C | A$?

Beware colliders!

Paths, dependencies, and information

Collider:

$$A \longrightarrow B \longleftarrow C$$

$A \perp\!\!\!\perp C$? Yes — no common cause, no causal path.

$A \perp\!\!\!\perp C | B$? No! — conditioning on the collider *opens* a path.

$B \perp\!\!\!\perp C | A$? No — C directly causes B.

Beware colliders!

Colliding is real

Pearl's favorite ($A \to B \leftarrow C$):

A: It rains

B: The lawn is wet (collider)

C: Sprinkler recently on

[1] Thanks to Jason Roy for these examples

Colliding is real

Pearl's favorite ($A \to B \leftarrow C$):

A: It rains

B: The lawn is wet (collider)

C: Sprinkler recently on

Hollywood success ($A \to B \leftarrow C$):

A: Good looks

B: Fame (collider)

C: Acting skills

[1] Thanks to Jason Roy for these examples

Colliding is real

Pearl's favorite ($A \to B \leftarrow C$):

A: It rains

B: The lawn is wet (collider)

C: Sprinkler recently on

Hollywood success ($A \to B \leftarrow C$):

A: Good looks

B: Fame (collider)

C: Acting skills

Academic tenure ($A \to B \leftarrow C$):

A: Productivity

B: Tenure (collider)

C: Originality[1]

[1] Thanks to Jason Roy for these examples

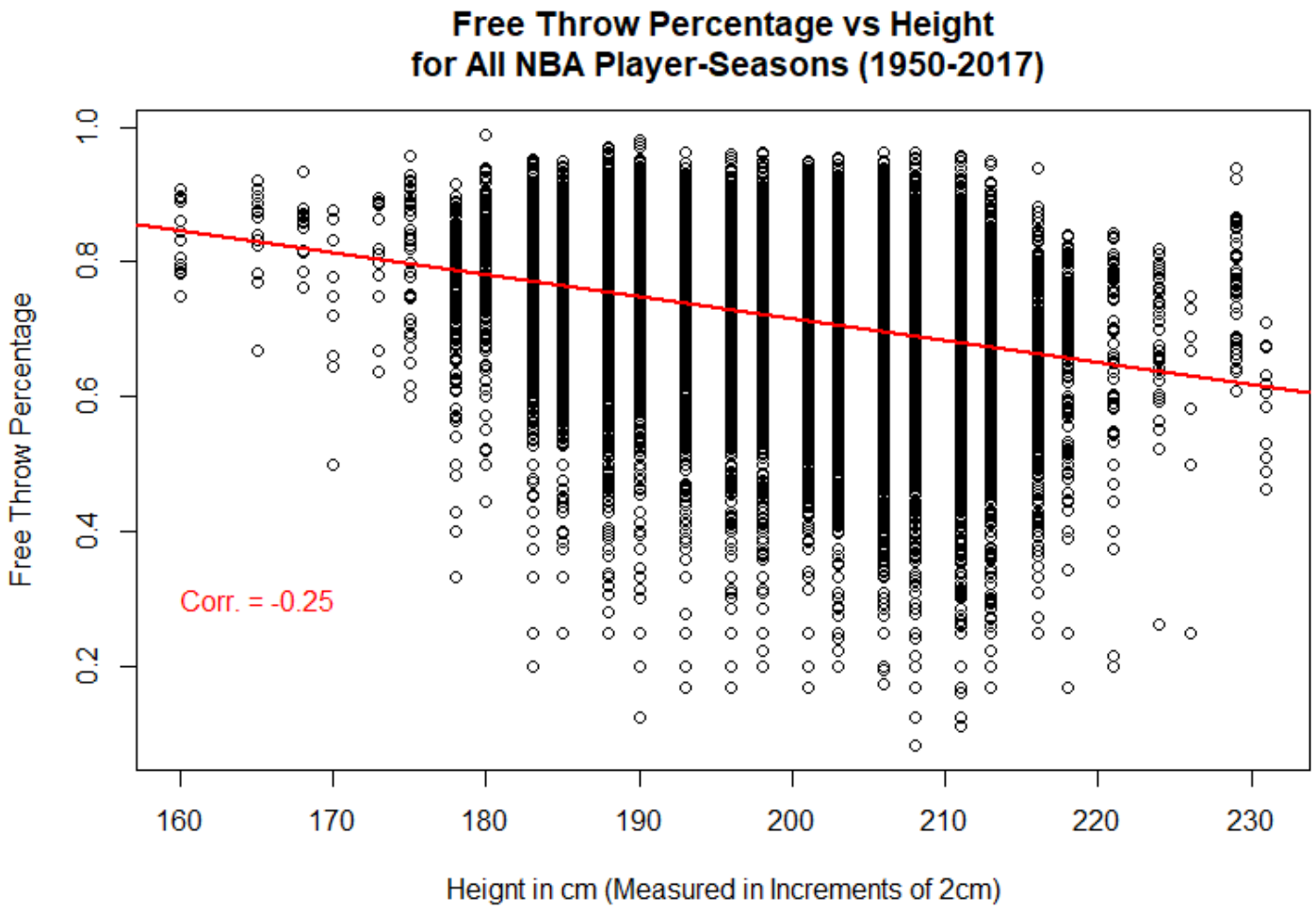
Free Throw Percentage vs Height
for All NBA Player-Seasons (1950-2017)
Free Throw Percentage
0.2
0.4
0.6
0.8
1.0
Corr. = -0.25
160
170
180
190
200
210
220
230
Heignt in cm (Measured in Increments of 2cm)

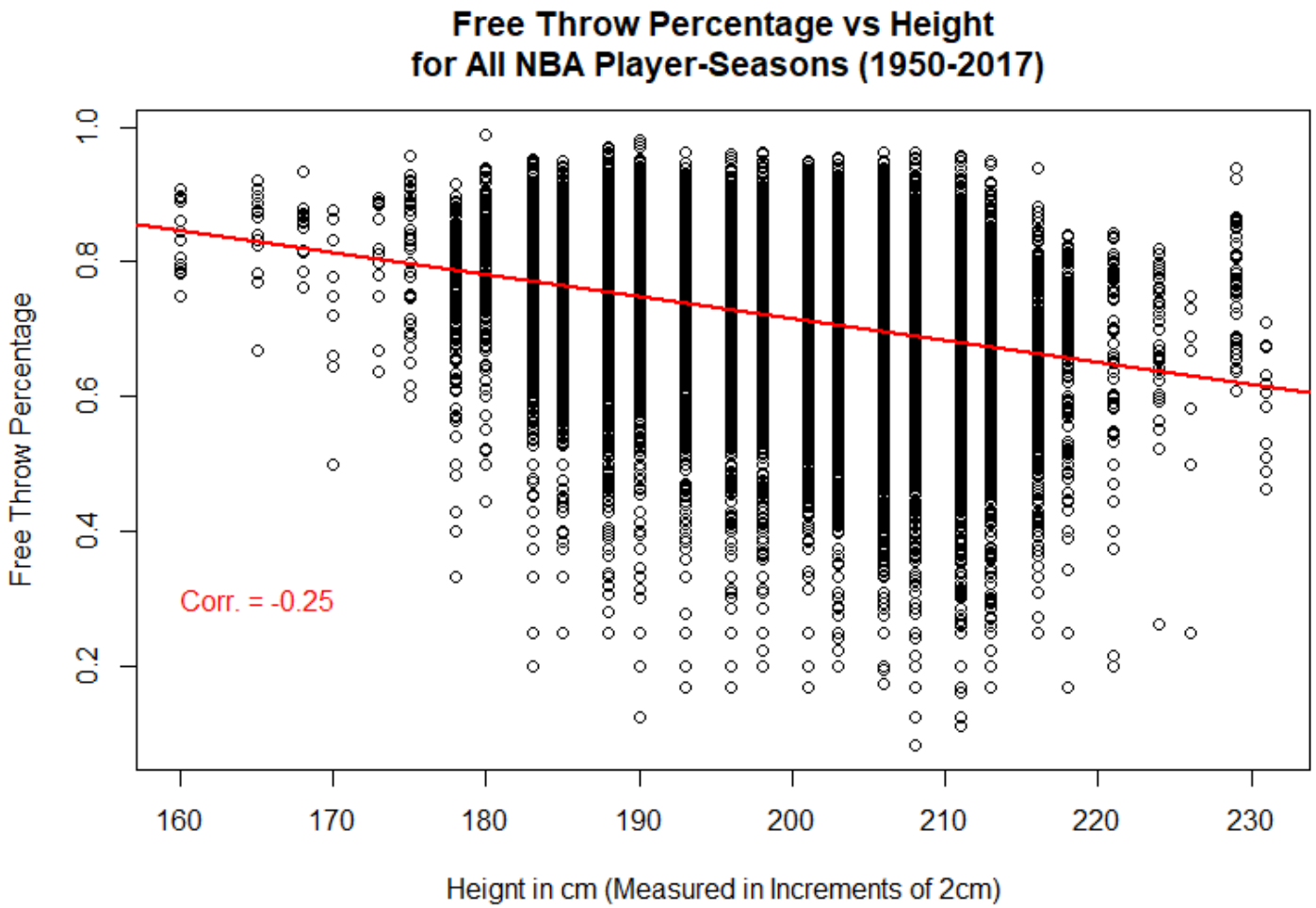

Why do you think that is? Answer with a DAG.

*Source: Adam Rohde, via `https://www.basketball-reference.com/` and `https://www.kaggle.com/datasets/drgilermo/nba-players-stats`.

d-Separation

You now also understand d (directional)-Separation, which just follows from these to formalize when we can claim conditional independence

d-Separation

You now also understand d (directional)-Separation, which just follows from these to formalize when we can claim conditional independence

Rule

***d*-separation**.
A and C are d-separated by a set of nodes Z if and only if every path between A and C is blocked, where a path is blocked if:

- *it contains a chain ($\rightarrow B \rightarrow$) or fork ($\leftarrow B \rightarrow$) and $B \in Z$ (conditioning blocks it), or*
- *it contains a collider ($\rightarrow B \leftarrow$) and neither B nor any descendant of B is in Z (not conditioning keeps it closed).*

d-Separation

You now also understand d (directional)-Separation, which just follows from these to formalize when we can claim conditional independence

Rule

***d*-separation**.
A and C are d-separated by a set of nodes Z if and only if every path between A and C is blocked, where a path is blocked if:

- *it contains a chain ($\rightarrow B \rightarrow$) or fork ($\leftarrow B \rightarrow$) and $B \in Z$ (conditioning blocks it), or*
- *it contains a collider ($\rightarrow B \leftarrow$) and neither B nor any descendant of B is in Z (not conditioning keeps it closed).*

If A and C are d-separated by Z, then $A \perp\!\!\!\perp C \mid Z$ in any distribution generated by that graph.

Practice

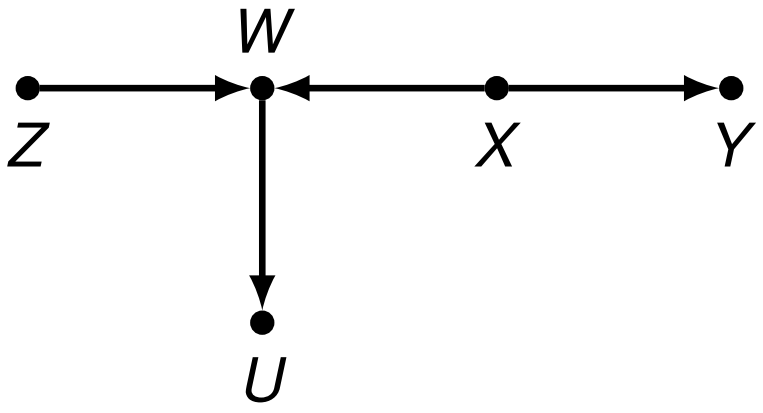

Practice

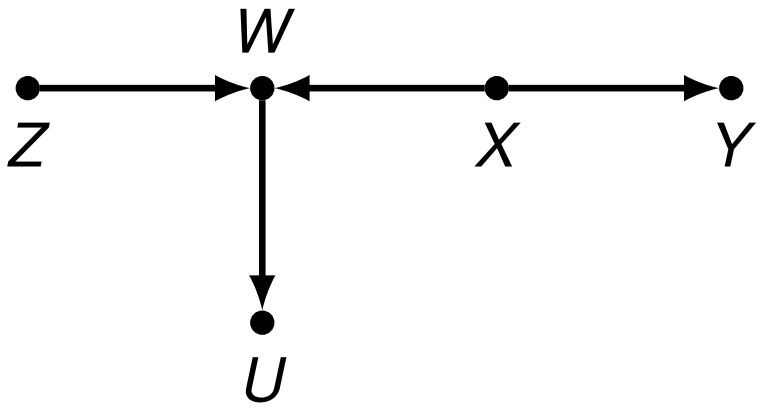

Looking at Z and Y:

- Are they d-separated conditional on $\{\}$?
- Are they d-separated conditional on W?
- Are they d-separated conditional on $\{W, X\}$?
- Are they d-separated conditional on U?

More practice

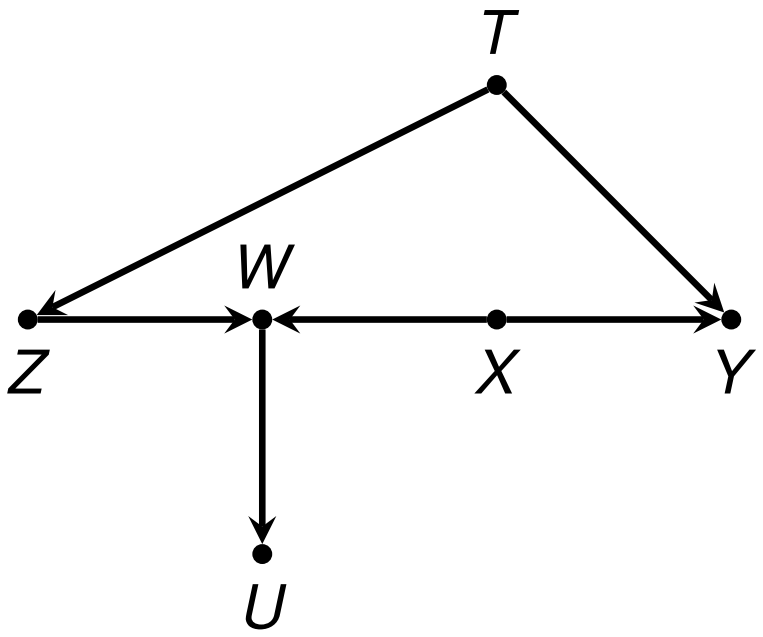

More practice

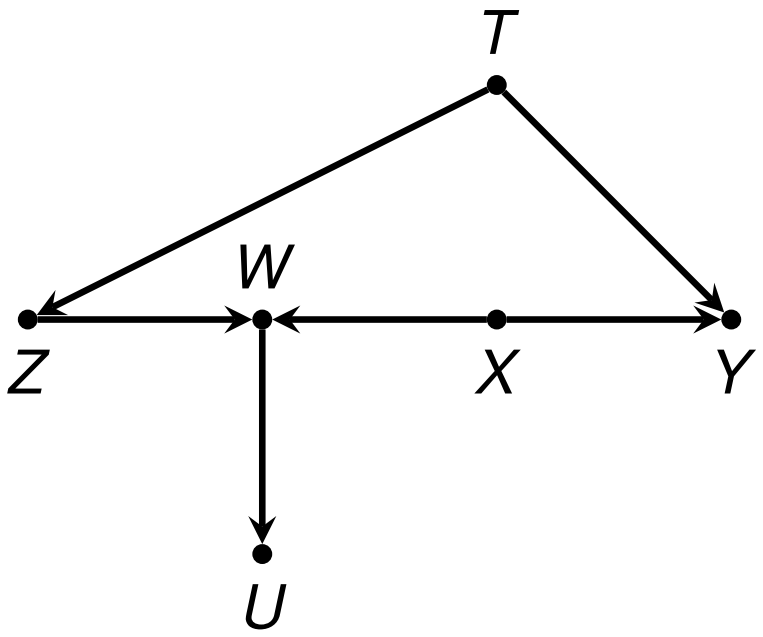

What sets d-separate Z from Y?

Review so far

All of this is really to say that for two nodes of interest,

Review so far

All of this is really to say that for two nodes of interest,

- they come to be associated due to (i) one causing another (directly or through a chain), (ii) a common cause; (iii) conditioning on a common consequence (collider)

Review so far

All of this is really to say that for two nodes of interest,

- they come to be associated due to (i) one causing another (directly or through a chain), (ii) a common cause; (iii) conditioning on a common consequence (collider)
- you can render them independent according to the rules of *d*-separation:
  - if they are independent already
  - if you block the common cause or intermediate causal path by conditioning
  - if you don't condition on collider (or descendant thereof)

Review so far

All of this is really to say that for two nodes of interest,

- they come to be associated due to (i) one causing another (directly or through a chain), (ii) a common cause; (iii) conditioning on a common consequence (collider)
- you can render them independent according to the rules of *d*-separation:
  - if they are independent already
  - if you block the common cause or intermediate causal path by conditioning
  - if you don't condition on collider (or descendant thereof)
- *d*-separation guarantees conditional independence; non-d-separation risks lack of independence.

Review so far

All of this is really to say that for two nodes of interest,

- they come to be associated due to (i) one causing another (directly or through a chain), (ii) a common cause; (iii) conditioning on a common consequence (collider)
- you can render them independent according to the rules of *d*-separation:
  - if they are independent already
  - if you block the common cause or intermediate causal path by conditioning
  - if you don't condition on collider (or descendant thereof)
- *d*-separation guarantees conditional independence; non-d-separation risks lack of independence.
- This will lead to more interesting things soon, I promise!