NOTICE: PROPRIETARY RIGHTS INVOLVED

THIS DOCUMENT AS WELL AS THE INFORMATION OR DATA CONTAINED HEREIN ARE CONFIDENTIAL AND SHALL NOT BE COPIED, RECOPIED, REPRODUCED, TRANSMITTED, DISCLOSED OR DISTRIBUTED TO OTHERS OR OTHERWISE USED FOR ANY PURPOSE WITHOUT THE EXPRESS, PRIOR AND WRITTEN PERMISSION OF TENARIS CONNECTIONS AG AND OR HYDRIL COMPANY AND/OR ITS AFFILIATED COMPANIES ("TENARIS"). THIS DOCUMENT AS WELL AS THE INFORMATION OR DATA CONTAINED HEREIN ARE THE EXCLUSIVE PROPERTY OF TENARIS, AND ARE TO BE RETURNED UPON THE REQUEST THEREFOR, ALL RIGHTS IN PROPRIETARY AND NOVEL FEATURES OF THE SUBJECT MATTER ARE EXPRESSLEY RESERVED BY TENARIS. RECIPIENT'S AGREEMENT TO THE FOREGOING IS INDICATED BY ACCEPTANCE OF THIS DOCUMENT. COPYRIGHTED 2012 AS AN UNPUBLISHED WORK. ALL RIGHTS RESERVED.

REVISIONS

ZONE	REV	DESCRIPTION	DATE	PREPARED	APPROVED
- - D8 D8	03	Drawing format changed to TenarisHydril Pos. 6 was added on charts. A notes section was added. Marking notes were moved to notes section. Position was added as marking requirement.	18/May/12	L.BENEDETTI	N.CROWLEY
- C6 C6	04	Added positions 7 to 10. Added 1 1/4" and 1 1/3" grooves. Added A, E and F dimensions.	04/Sep/13	A.OGGERO	N.CROWLEY

NOTES:

1. Engrave "Tenaris Lead Standard" + Drawing N° + Rev. + Position + Taper.
2. Engrave values specified below grooves.
3. Break all sharp corners.
4. Engrave Serial Number according to manufacturer.
5. Material: 01 Hardness: 60-62 HRc

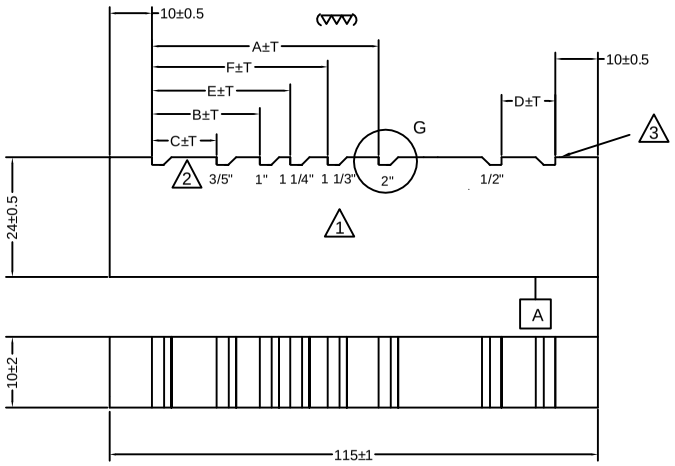

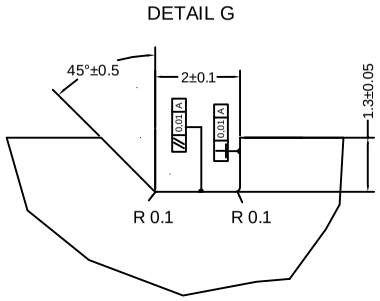

Chart in mm

Pos.	Taper		A	B	C	D	E	F	T
1	0.6 TPF	5%	50.816	25.408	15.245	12.704			0.005
2	3/4 TPF	6.25%	50.824	25.412	15.247	12.706			0.005
3	1.02 TPF	8.5%	50.846	25.423		12.711			0.005
4	1.333 TPF	11.11%	50.878	25.439					0.005
5	1.5 TPF	12.5%	50.900	25.450					0.005
6	0 TPF	0.0%	50.800	25.400		12.700			0.005
7	1.02 TPF	8.5%	50.846	25.423			31.779		0.005
8	1.5 TPF	12.5%	50.900	25.450				33.933	0.005
9	1.333 TPF	11.11%	50.878	25.439				33.919	0.005
10	1.333 TPF	11.11%	50.878	25.439			31.799		0.005

Chart in inches

Pos.	Taper		A	B	C	D	E	F	T
1	0.6 TPF	5%	2.0006	1.0003	0.6002	0.5002			0.0002
2	3/4 TPF	6.25%	2.0009	1.0005	0.6003	0.5002			0.0002
3	1.02 TPF	8.5%	2.0018	1.0009		0.5004			0.0002
4	1.333 TPF	11.11%	2.0031	1.0015					0.0002
5	1.5 TPF	12.5%	2.0039	1.0020					0.0002
6	0 TPF	0.0%	2.0000	1.0000		0.5000			0.0002
7	1.02 TPF	8.5%	2.0018	1.0009			1.2511		0.0002
8	1.5 TPF	12.5%	2.0039	1.0020				1.3359	0.0002
9	1.333 TPF	11.11%	2.0031	1.0015				1.3354	0.0002
10	1.333 TPF	11.11%	2.0031	1.0015			1.2519		0.0002

ENGINEERING CHANGE

PARTS DISPOSITION	USE	REWORK	SCRAP	NOTED	DWG NO. TSH-GD-00.0016		REV 04
					PREPARED	A.OGGERO	04/Sep/13
RAW MAT'L	1	5	9	13	CHECKED	E.MARTINEZ	04/Sep/13
IN PROCESS	2	6	10	14	APPROVED	N.CROWLEY	04/Sep/13
COMPLETED	3	7	11	15	ECR NO.		
ASSEMBLED	4	8	12	16	EFF	UPON RELEASE	

REASON FOR CHANGE/S AND/OR DISPOSITION NOTED

ADDED NEW POSITIONS, NEW GROOVES AND THEIR DIMENSIONS

EC-MASE.DWG

500/ 250/ 125/ 63/ Ra= [μ in]

12.5/ 6.3/ 3.2/ 1.6/ Ra= [μ m]

COMPANY PROVIDES AND CUSTOMER ACCEPTS THE PLAN AND/OR DRAWINGS "AS IS". NEITHER COMPANY NOR ITS AFFILIATES MAKE ANY WARRANTY, TERM, REPRESENTATION, GUARANTEE, CONDITION AS TO THE TITLE, DESIGN, PERFORMANCE, ABSENCE OF APPARENT OR LATENT DEFECTS, EXPRESS, IMPLIED, OR STATUTORY, WITH RESPECT TO THE PLAN AND/OR DRAWINGS PROVIDED, INCLUDING, WITHOUT LIMITATION, ANY WARRANTIES OF MERCHANTABILITY, FITNESS FOR A PARTICULAR PURPOSE, TITLE AND INTELLECTUAL PROPERTY INFRINGEMENT. ALL WARRANTIES, TERMS, REPRESENTATIONS, GUARANTEES OR LIABILITIES AT LAW, COMMON LAW, AT EQUITY, IN CONTRACT, OR OTHERWISE ARE DISCLAIMED TO THE FULLEST EXTENT PERMITTED BY LAW. CUSTOMER SHALL AT ALL TIMES BE RESPONSIBLE FOR THE PLAN AND/OR DRAWINGS AND/OR ITS RESULTS AND/OR INTERPRETATIONS PRODUCED BY CUSTOMER. COMPANY SHALL HAVE NO LIABILITY WHATSOEVER TO THE CUSTOMER WITH RESPECT TO THE PLAN AND/OR DRAWINGS DELIVERED BY COMPANY.

UNLESS OTHERWISE SPECIFIED

- DIMENSIONS ARE IN INCHES AND [MILIMETERS]
- INTERPRET DRAWING IAW AMERICAN NATIONAL STANDARDS INCLUDING APPLICABLE DOCUMENTS REFERENCED THEREIN
- INTERPRET DIMENSIONS AND TOLERANCES IAW ANSI Y 14.5, TRUE POSITION TOLERANCES ARE AT MMC
- MACHINED FILLETS .03 R ±.01
- SURFACE FINISH SHALL BE IAW ANSI B 46.1 125/
- DIMENSIONS TO BE MET AFTER PROTECTIVE COATING
- REMOVE ALL BURRS, BREAK SHARP EDGES .30 R MAX
- △ INDICATES CROSS REFERENCE TO A NOTE
- ○ INDICATES CROSS REFERENCE TO THE INSPECTION REPORT

PREP	J.PACIENZA	8/Sep/10
CHK	C.CATALDO	8/Sep/10
APP	N.CROWLEY	8/Sep/10
SCALE	NONE	
WT.	N/A	

TenarisHydril

LEAD SETTING STANDARD
ALL TENARIS CONNECTIONS

SIZE	CODE IDENT NO.	DRAWING NO.	REVISION	SHEET
A4	–	TSH-GD-00.0016	04	1 OF 2

TSH Blue Near Flush

Position	Taper	Sizes & Weight
1	0.6" TPF (5%)	5" x 18#
		5 1/2" x 23#
		7" x 26#
		7 5/8" x 29.7#
		8 5/8" x 36#
		9 5/8" x 40#
		13 3/8" x 61#
2	3/4" TPF (6.25%)	7" x 29#
		7" x 32#
		7 5/8" x 33.7#
		8 5/8" x 40#
		9 5/8" x 43.5#
		9 5/8" x 47#
		10 3/4" x 51#
		10 3/4" x 55.5#
		11 3/4" x 54#
		11 3/4" x 60#
		13 3/8" x 68#
		13 3/8" x 72#
3	1.02" TPF (8.5%)	7" x 35#
		7" x 38#
		7" x 41#
		7 5/8" x 39#
		7 5/8" x 42.8#
		7 5/8" x 45.3#
		7 5/8" x 47.1#
		7 3/4" x 46.1#
		7 3/4" x 48.6#
		8 5/8" x 44#
		8 5/8" x 49#
		9 5/8" x 53.5#
		9 5/8" x 58.4#
		9 7/8" x 62.8#
		9 7/8" x 65.3#
		10" x 68.8"
		10 3/4" x 60.7"
		10 3/4" x 65.7#
		10 3/4" x 71.1#
		11 3/4" x 65#
		11 3/4" x 71#
		11 7/8" x 71.8#
		13 3/8" x 77#
		13 3/8" x 80.7#
		13 3/8" x 86#
		13 3/8" x 88.2#

TenarisHydril Connections

Position	Taper	Connections	Sizes
1	0.6" TPF (5%)	TSH MS28/MS28 XTXC	2 3/8" to 5 1/2"
2	3/4" TPF (6.25")	TSH Blue	2 3/8" to 5 1/2"
		TSH Blue Thermal Liner	2 3/8" to 5 1/2"
		TSH 3SB	2 3/8" to 13 5/8"
		TSH MS/MS XTXC	2 3/8" to 5 1/2"
		TSH PJD	2 3/8" to 5"
		TSH EL	2 3/8" to 4 1/2"
		TSH Blue CB	5 1/2"
		TenarisXP Buttress	4 1/2" to 16"
		TSH 3SB ST	7"
		TSH MS CB	2 3/8" to 5 1/2"
		TenarisXP Buttress LW	8 5/8"
3	1.02" TPF (8.5%)	TSH Blue	6 5/8" to 14"
		TSH Blue Thermal Liner	6 5/8" to 10 3/4"
		TSH MS/MS XTXC	6 5/8" to 13 5/8"
		TSH MS28/MS28 XTXC	6 5/8" to 9 5/8"
		TSH ER	7" to 13 5/8"
		TSH 3SB SL	7 5/8"
		TSH Big Flush	16"
		TSH Blue FGL	6 5/8"
		TSH Blue LW	8 5/8"
		TSH MS FGL	7"
		TSH MS SI	13 3/8"
		TSH Blue HW (1 start)	7 5/8" LR; 9 5/8"
4	1.333" TPF (11.11%)	TSH Blue HW (1 start)	10 1/8" to 11 3/4"; 14"
5	1.5" TPF (12.5%)	TSH MS	14"
		TSH ER	14" to 24 1/2"
		TSH HW	5" to 14"
		TSH New HWSL	10 3/4"
		TSH HWSL	10 3/4" to 11 3/4"
6	0.0" TPF (0.0%)	TSH PH4	All
		TSH PH6	All
		TSH CS	All
7	1.02" TPF (8.5%)	TSH Blue Max	10 1/8" to 14"
8	1.5" TPF (12.5%)	TSH Blue Quick Seal	18 5/8" to 20"
9	1.333" TPF (11.11%)	TSH Blue HW (2 starts)	12 1/4"
10	1.333" TPF (11.11%)	TSH Blue HW (2 starts)	7 5/8" HR; 8 5/8"

500 250 125 63 Ra= [µ in]

12.5 6.3 3.2 1.6 Ra= [µ m]

COMPANY PROVIDES AND CUSTOMER ACCEPTS THE PLAN AND/OR DRAWINGS "AS IS". NEITHER COMPANY NOR ITS AFFILIATES MAKE ANY WARRANTY, TERM, REPRESENTATION, GUARANTEE, CONDITION AS TO THE TITLE, DESIGN, PERFORMANCE, ABSENCE OF APPARENT OR LATENT DEFECTS, EXPRESS, IMPLIED, OR STATUTORY, WITH RESPECT TO THE PLAN AND/OR DRAWINGS PROVIDED, INCLUDING, WITHOUT LIMITATION, ANY WARRANTIES OF MERCHANTABILITY, FITNESS FOR A PARTICULAR PURPOSE, TITLE AND INTELLECTUAL PROPERTY INFRINGEMENT. ALL WARRANTIES, TERMS, REPRESENTATIONS, GUARANTEES OR LIABILITIES AT LAW, COMMON LAW, AT EQUITY, IN CONTRACT, OR OTHERWISE ARE DISCLAIMED TO THE FULLEST EXTENT PERMITTED BY LAW. CUSTOMER SHALL AT ALL TIMES BE RESPONSIBLE FOR THE PLAN AND/OR DRAWINGS AND/OR ITS RESULTS AND/OR INTERPRETATIONS PRODUCED BY CUSTOMER. COMPANY SHALL HAVE NO LIABILITY WHATSOEVER TO THE CUSTOMER WITH RESPECT TO THE PLAN AND/OR DRAWINGS DELIVERED BY COMPANY.

UNLESS OTHERWISE SPECIFIED

- DIMENSIONS ARE IN INCHES AND [MILIMETERS]
- INTERPRET DRAWING IAW AMERICAN NATIONAL STANDARDS INCLUDING APPLICABLE DOCUMENTS REFERENCED THEREIN
- INTERPRET DIMENSIONS AND TOLERANCES IAW ANSI Y 14.5, TRUE POSITION TOLERANCES ARE AT MMC
- MACHINED FILLETS .03 R ±.01
- SURFACE FINISH SHALL BE IAW ANSI B 46.1 125
- DIMENSIONS TO BE MET AFTER PROTECTIVE COATING
- REMOVE ALL BURRS, BREAK SHARP EDGES .30 R MAX
- △ INDICATES CROSS REFERENCE TO A NOTE
- ○ INDICATES CROSS REFERENCE TO THE INSPECTION REPORT

PREP	J.PACIENZA	8/Sep/10
CHK	C.CATALDO	8/Sep/10
APP	N.CROWLEY	8/Sep/10
SCALE	NONE	
WT.	N/A	

TenarisHydril

LEAD SETTING STANDARD
ALL TENARIS CONNECTIONS

SIZE	CODE IDENT NO.	DRAWING NO.	REVISION	SHEET
A4	–	TSH–GD–00.0016	04	2 OF 2