REVISIONS			
Rev.	DESCRIPTION	DATE	APPROVED
11	Format change. Added Pos. 17. Added note 9.	15/Nov/13	N.CROWLEY

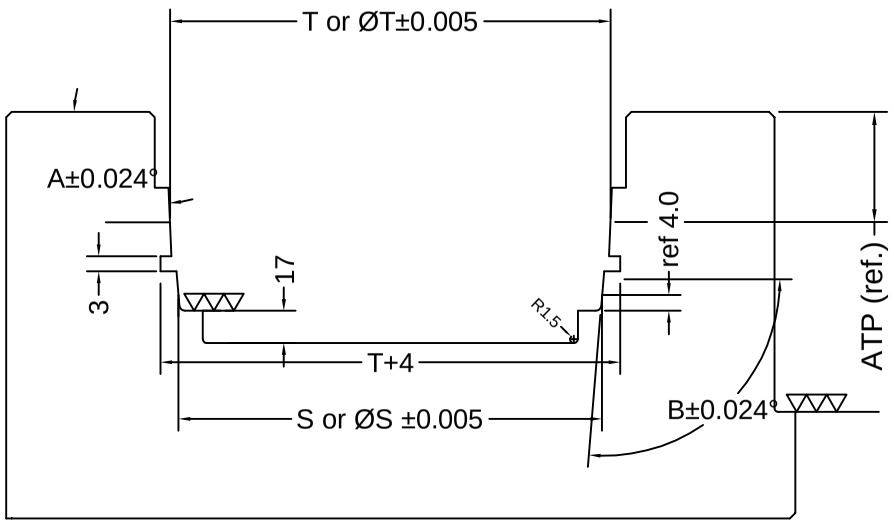

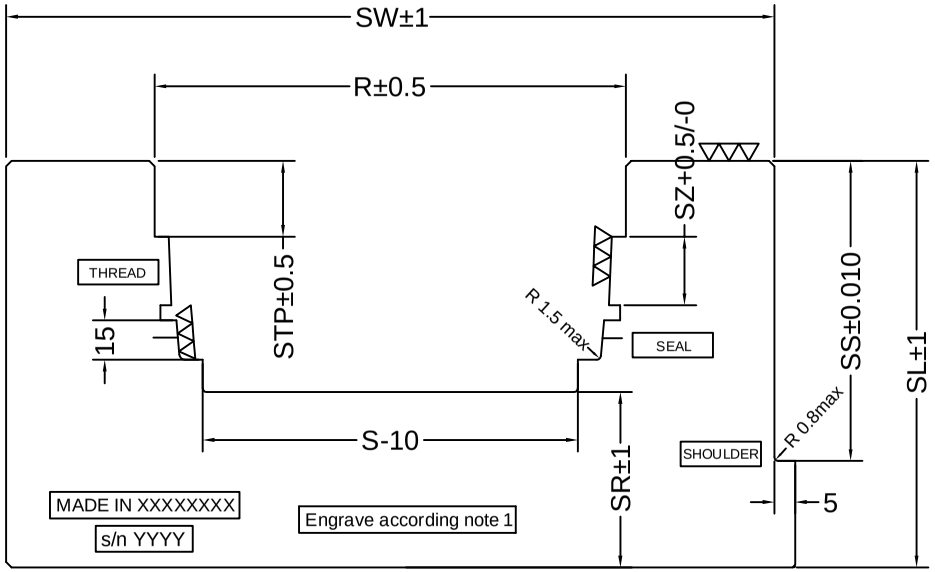

OPTION 1 (FLAT SURFACE)

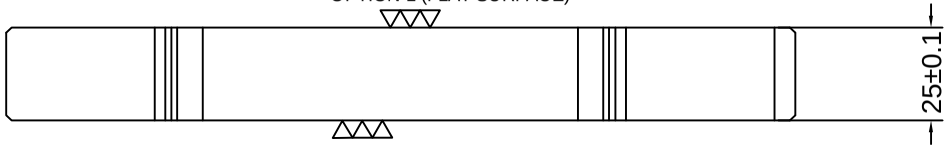

OPTION 2 (CIRCULAR SURFACE)

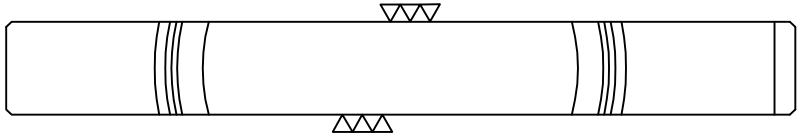

ENGINEERING CHANGE

PARTS DISPOSITION	USE	REWORK	SCRAP	NOTED	DWG NO. TSH-GD-01.0002		REV 11
					PREPARED	S.NEVLUD	15/Nov/13
RAW MAT'L	1	5	9	13	CHECKED	A.OGGERO	15/Nov/13
IN PROCESS	2	6	10	14	APPROVED	N.CROWLEY	15/Nov/13
COMPLETED	3	7	11	15	ECR NO.		
ASSEMBLED	4	8	12	16	EFF	UPON RELEASE	

REASON FOR CHANGE/S AND/OR DISPOSITION NOTED

Added new position.
Added note 9.

NOTICE
PROPRIETARY RIGHTS INVOLVED
THIS DOCUMENT AS WELL AS THE INFORMATION OR DATA CONTAINED HEREIN ARE CONFIDENTIAL AND SHALL NOT BE COPIED, RECOPIED, REPRODUCED, TRANSMITTED, DISCLOSED OR DISTRIBUTED TO OTHERS OR OTHERWISE USED FOR ANY PURPOSE WITHOUT THE EXPRESS, PRIOR AND WRITTEN PERMISSION OF TENARIS CONNECTIONS AG AND/OR HYDRIL COMPANY AND/OR ITS AFFILIATED COMPANIES ("TENARIS"). THIS DOCUMENT AS WELL AS THE INFORMATION OR DATA CONTAINED HEREIN ARE THE EXCLUSIVE PROPERTY OF TENARIS, AND ARE TO BE RETURNED UPON REQUEST THEREFOR. ALL RIGHTS IN PROPRIETARY AND NOVEL FEATURES OF THE SUBJECT MATTER ARE EXPRESSLY RESERVED BY TENARIS. RECIPIENT'S AGREEMENT TO THE FOREGOING IS INDICATED BY ACCEPTANCE OF THIS DOCUMENT. COPYRIGHTED 2010 AS UNPUBLISHED WORK. ALL RIGHTS RESERVED.

PREPARED	S.NEVLUD	15/Nov/13
CHECKED	A.OGGERO	15/Nov/13
ENGINEER		
MFG		
QA		
APPROVED	N.CROWLEY	15/Nov/13
APPROVED		
RELEASED		

TenarisHydril

TenarisHydril Blue
Box Seal and Thread Standard
6 5/8" to 14"

SIZE	CODE IDENT NO.	DRAWING NO.	REVISION
A4		TSH-GD-01.0002	11
SCALE	WT.	SHEET 1 OF 2	

REVISIONS			
Rev.	DESCRIPTION	DATE	APPROVED
11	Format change. Added Pos. 17. Added note 9.	15/Nov/13	N.CROWLEY

Notes:
1.- Engrave "TSH-GD-01.0002 Rev ...Pos ...."
2.- Engrave Thread and Seal. Words shall be 0.8mm deep.
3.- Material: Thyrodur 2990.
Heat treatment:
a) Stress Relief at 650°CX 2 hours, as an intermediate step between machining and grinding.
b) Vacuum quenching from an austenitising temperature of 1070 - 1080°C to room temperature.
c) Cooling: Subzero up to -80°C and then tempered twice at 520°C. Hardness required 58-60 HRC.
4.- Serial Number - (according to vendor's identification).
5.- Taper surfaces for thread and seal axis shall be perpendicular to the reference surface.
6.- Dimensions S, T, ATP, SS, Angle A and Angle B shall be certified.
7.- Corrosion protection and packaging shall be according to TenarisConnections specification.
8.- Certificate shall be according TenarisConnections specification.
9.- Mark seal setting point on both seal pads.

Position	Diameter	A°	T or ØT	ATP (ref.)	R	STP	B°	S or ØS	SS	SR	SW	SZ	SL
1	6 5/8"	92.434	164.147	71.833	166	63.9	94.764	160.424	113.610	60	266	16	174.8
2	7"	92.434	173.147	71.953	175	64.1	94.764	169.414	113.610	60	275	16	175
16	7 1/4"	92.434	179.253	72.500	182	64.5	94.764	175.504	114.340	60	282	16	175.5
3	7 5/8"	92.434	188.647	73.393	190	65.5	94.764	184.854	115.420	60	290	16	176.4
4	7 3/4"	92.434	191.347	84.163	193	76.3	94.764	187.564	126.020	60	293	16	187.2
5	8 5/8"	92.434	213.847	86.123	215	78.2	94.764	210.004	128.480	70	335	16	199.1
6	9 5/8"	92.434	239.247	85.563	241	77.7	94.764	235.364	128.480	70	361	16	198.6
7	9 7/8"	92.434	244.847	86.473	246	78.6	94.764	241.034	128.480	70	366	16	199.5
17	10 1/4"	92.434	256.045	77.950	270	77.3	94.764	251.464	128.478	70	380	16	198.2
8	10 3/4"	92.434	268.247	85.183	270	77.3	94.764	264.174	128.480	70	390	16	198.2
9	11 3/4"	92.434	293.747	85.233	295	77.3	94.764	289.774	128.480	80	435	16	208.2
10	11 7/8"	92.434	296.447	92.283	300	84.35	94.764	292.434	136.010	80	440	16	215.3
11	13 3/8"	92.434	334.047	100.093	336	92.2	94.764	329.934	145.080	80	476	16	223.1
12	13 5/8"	92.434	339.847	100.253	341	92.4	94.764	335.664	145.080	80	481	16	223.3
13	13 1/2"	92.434	337.547	100.253	339	92.3	94.764	333.364	145.080	80	479	16	223.3
14	14"	92.434	348.737	118.463	352	110.4	94.764	344.344	163.430	80	485	16	241.4
15	8 5/8" LW	92.434	215.747	63.723	215	55.7	94.764	211.904	106.080	70	335	16	176.7

NOTICE
PROPRIETARY RIGHTS INVOLVED
THIS DOCUMENT AS WELL AS THE INFORMATION OR DATA CONTAINED HEREIN ARE CONFIDENTIAL AND SHALL NOT BE COPIED, RECOPIED, REPRODUCED, TRANSMITTED, DISCLOSED OR DISTRIBUTED TO OTHERS OR OTHERWISE USED FOR ANY PURPOSE WITHOUT THE EXPRESS, PRIOR AND WRITTEN PERMISSION OF TENARIS CONNECTIONS AG AND/OR HYDRIL COMPANY AND/OR ITS AFFILIATED COMPANIES ("TENARIS"). THIS DOCUMENT AS WELL AS THE INFORMATION OR DATA CONTAINED HEREIN ARE THE EXCLUSIVE PROPERTY OF TENARIS, AND ARE TO BE RETURNED UPON REQUEST THEREFOR. ALL RIGHTS IN PROPRIETARY AND NOVEL FEATURES OF THE SUBJECT MATTER ARE EXPRESSLY RESERVED BY TENARIS. RECIPIENT'S AGREEMENT TO THE FOREGOING IS INDICATED BY ACCEPTANCE OF THIS DOCUMENT. COPYRIGHTED 2010 AS UNPUBLISHED WORK. ALL RIGHTS RESERVED.

PREPARED	S.NEVLUD	15/Nov/13
CHECKED	A.OGGERO	15/Nov/13
ENGINEER		
MFG		
QA		
APPROVED	N.CROWLEY	15/Nov/13
APPROVED		
RELEASED		

TenarisHydril

TenarisHydril Blue
Box Seal and Thread Standard
6 5/8" to 14"

SIZE	CODE IDENT NO.	DRAWING NO.	REVISION
A4		TSH-GD-01.0002	11
SCALE	WT.	SHEET 2 OF 2	