LISA CONTROL TECHNOLOGY Co.,LTD

Add: CT4A2, Linh Dam, Dai Kim, Hoang Mai, Hanoi

Phone/ Fax: 04 3540 0982

Email: contact@lisatech.vn

Project: STANDARD

Specification: UPS SI-S 60VDCX-L1000

Nhà sản xuất:

Path:

Make:

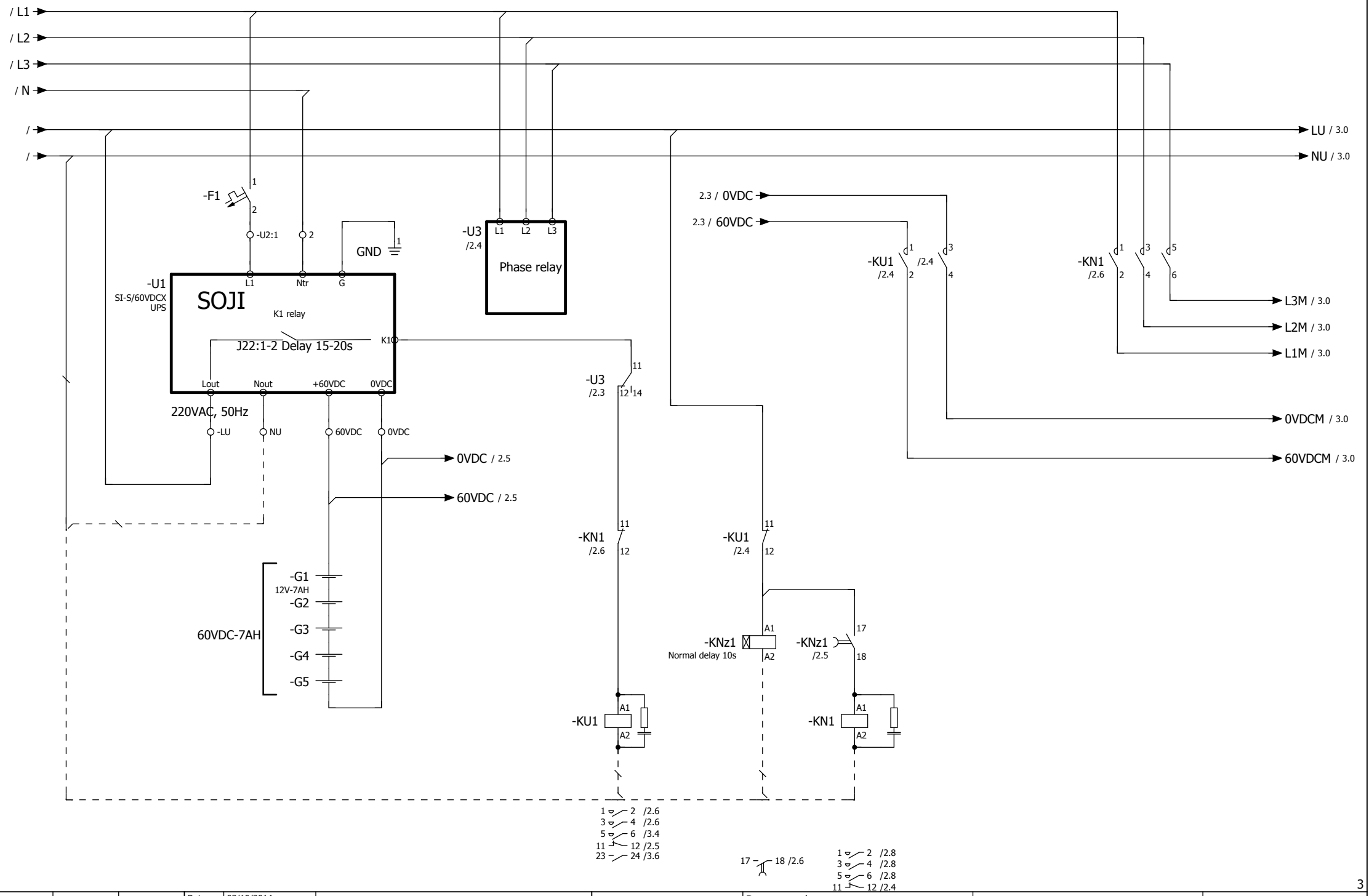

			Date	03/10/2014			Powe supply		=	
			Ed.	LE TUAN					+	
			Appr		UPS SI-S/60VDCX Standard-L1000			IEC_tpl001	Page	2
Modification	Date	Name	Original		Replacement of	Replaced by			Page	3

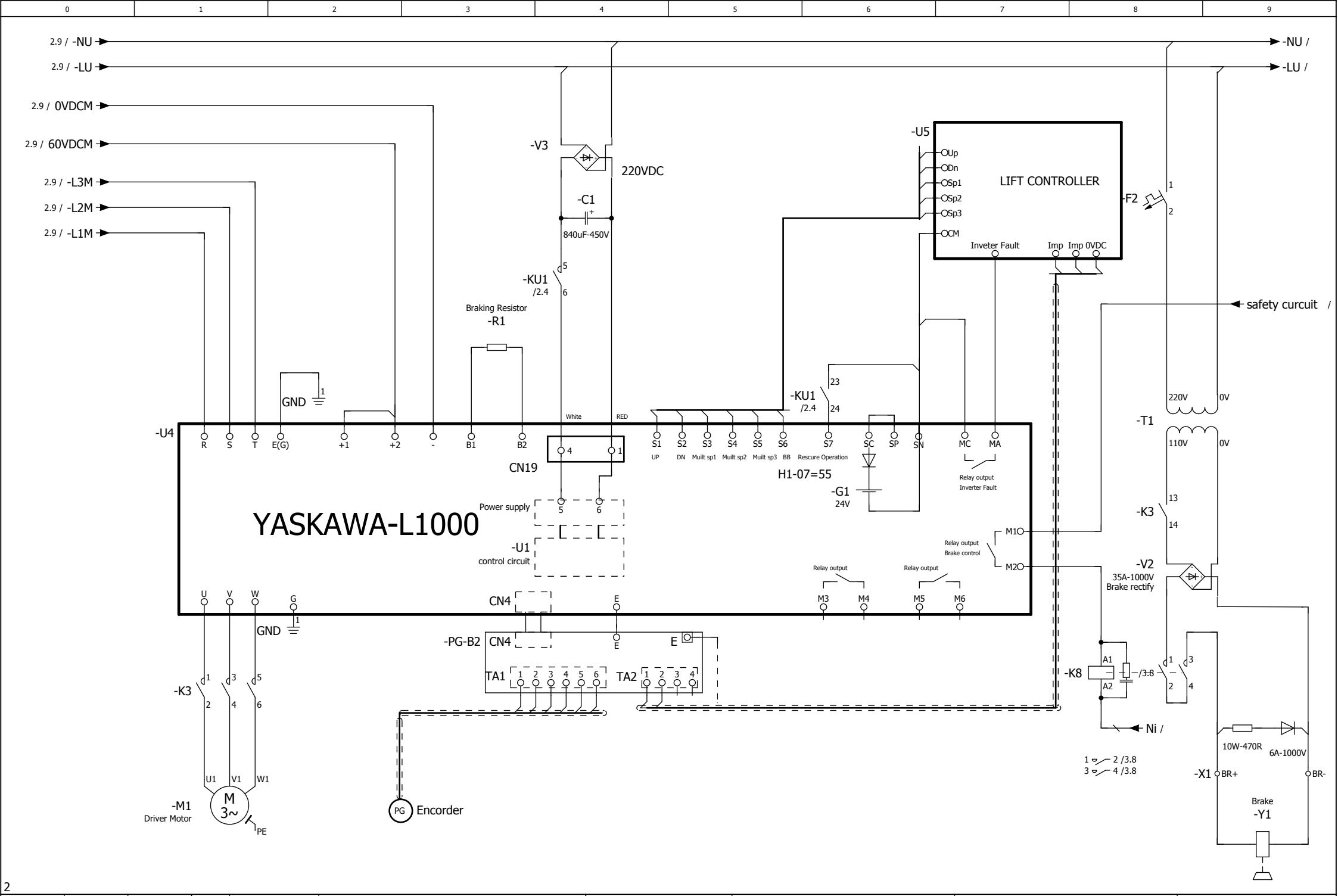

2

			Date	03/10/2014			Inverter		=	
			Ed.	LE TUAN					+	
			Appr		UPS SI-S/60VDCX Standard-L1000			IEC_tpl001	Page	3
Modification	Date	Name	Original		Replacement of	Replaced by			Page	3