Mesopotamian journal of Computer Science
Vol. **(2023)**, 2023, **pp**. 130–139
DOI: https://doi.org/10.58496/MJCSC/2023/015; ISSN: 2958-6631
https://mesopotamian.press/journals/index.php/cs

Review Article

Artificial Neural Networks: An Overview

Roheen Qamar [1,*], Baqar Ali Zardari [2]

[1]*Department of Computer Science, Quaid-e-Awam University of Engineering, Science and Technology, Nawabshah, Pakistan*

[2]*Department of Information Technology, Quaid-e-Awam University of Engineering, Science and Technology, Nawabshah, Pakistan*

ARTICLE INFO

Article History
Received 04 Jun 2023
Accepted 25 July 2023
Published 02 Aug 2023

Keywords
Artificial Neural Networks
Neural Networks Types
Machine learning
Supervised Learning
Unsupervised Learning

ABSTRACT

Neural networks, also known as artificial neural networks (ANNs) or artificially generated neural networks (SNNs) are a subset of machine learning that provide the foundation of deep learning techniques. Their name and form are inspired by the human brain, and they replicate the way real neurons communicate with one another. Artificial neural networks (ANNs) are massively parallel systems comprised of a huge number of interconnected basic processors. This paper discuss about the artificial neural network and its basic types. This article explains the ANN and its basic outlines the fundamental neuron and the artificial computer model. It describes network structures and learning methods, as well as some of the most popular ANNs.

1. INTRODUCTION

A nonlinear data modelling system in which models or patterns are established in complicated relationships between inputs and outputs is known as an artificial neural network (ANN). Neural networks have superior learning abilities. They are commonly employed for more complex tasks like handwriting and facial recognition. The neural network is also referred to as a "perceptron". It first appeared in the early 1940s. They have just recently become a significant component of artificial intelligence. Neural networks are viewed as nonlinear observable data displaying devices in which the relationship between data sources is shown. The neural network is made up of and flows are illustrated, alternatively, the neural network is made up of three neural layers of units, with a layer of "input" units coupled with a layer of "encased up" units , This corresponds to a layer of "output" units [1]. Data arrives at the data sources and travels through the network, layer by layer, until it reaches the output. The neural networks employed in this study are detailed in the following sections. As seen in figure 1.

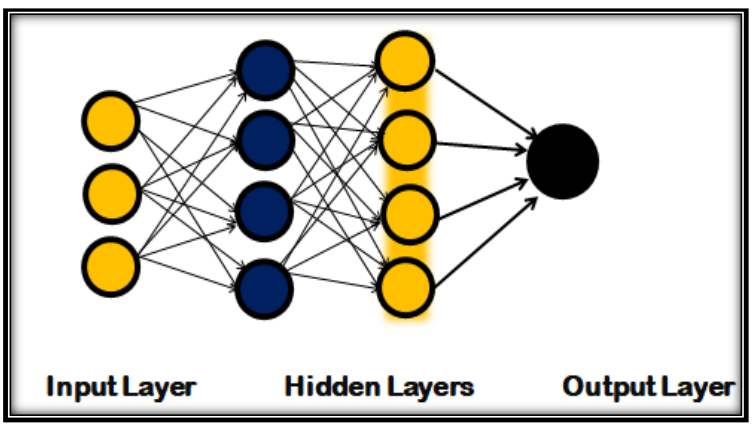

Fig. 1. Artificial Neural Networks

*Corresponding author. Email: roheen.qamar04@yahoo.com

In recent years, Artificial Neural Networks (ANNs) have seen widespread usage in a variety of application domains. The majority of applications employ feed forward ANNs as well as the back propagation (BP) coaching algorithmic programmer. There are several variations of the traditional BP algorithm ANN alternate training methods. These training techniques are based on a rigid ANN architecture [2]. They only train weights inside the fixed architecture, which includes property and node transfer functions. the problem of developing a near-optimal ANN design for an application remains unresolved. This is a critical problem, however, because there are strong biological and technical evidences that show that the function, i.e., the knowledge process capability of an ANN, is determined by its design.

2. WHAT DOES ARTIFICIAL NEURAL NETWORK (ANN) MEANS?

A computational model based on the structure and functions of biological neural networks is known as an artificial neuron network (ANN). Because a neural network alters - or learns, in a sense - based on the input and output, the information that goes through the network modifies the structure of the ANN.

ANNs are nonlinear statistical data modelling tools used to describe complicated interactions between inputs and outputs or to discover patterns. A neural network design is another name for ANN.

With their extraordinary capacity to infer meaning from intricate or inaccurate data, neural networks may be used to uncover patterns and discover trends that are too complex for people or other computer systems to detect. A trained neural network can be considered an "expert" in the category of information it has been trained to assess [3].

1. ANNs have three linked layers. The first layer is made up of input neurons. These neurons transmit data to the second layer, which delivers output neurons to the third layer.
2. ANNs are nonlinear statistical data modelling tools used to simulate complicated interactions between inputs and outputs or to discover patterns.
3. Neural networks, also known as artificial neural networks, are a type of deep learning technology that falls under the category of artificial intelligence, or AI. These technologies' commercial applications are typically focused on tackling difficult signal processing or pattern recognition challenges.
4. The most popular sort of artificial neural network is made up of three sets of units, or layers: a layer of "input" units connected to a layer of "hidden" units connected to a layer of "output" units.
5. Data enters the network at the inputs and travels through the network layer by layer until it reaches the outputs [4].

There are three layers in the Artificial Neural Network Architecture:

2.1 The Input Layer

A neural network's input layer is made up of a collection of artificial input neurons. They send information from the initial neuron layers to the system for processing. The neural network's input layer initiates the workflow.

2.2 Hidden Layer

The artificial neural network's hidden layer is made up of input and output layers, and the input and output of the artificial neurons are weighted by the number of inputs.

2.3 The Output Layer

The last neurons layer is an output layer in an artificial neural network that provides specific outputs in the programmer. Because they are the network's final "performer" nodes, neurons in the output layer can be built and treated differently [5].

3. WHY USE NEURAL NETWORKS?

Neural networks, with their remarkable ability to derive meaning from complicated or imprecise data, can be used to extract patterns and detect trends that are too complex to be noticed by either humans or other computer techniques. A trained neural network can be thought of as an "expert" in the category of information it has been given to analyses. This expert can then be used to provide projections given new situations of interest and answer "what if" questions. Other benefits include:

1. **Adaptive Learning:** The capacity to learn how to do tasks based on data provided for training or prior experience.
2. **Self-Organization:** An ANN may organize or represent the information it gets during learning time on its own.
3. **Real-Time Operation:** ANN calculations may be performed in parallel, and specific hardware components that take advantage of this feature are being created and built.
4. **Fault Tolerance:** through Redundant Information Coding: Partial network breakdown results in performance reduction. Even if the network is severely damaged, certain network functions may be kept [6].

Since neural networks are best at identifying patterns or trends in data, they are well suited for prediction or forecasting needs including.

4. MACHINE LEARNING

A Neural Network is an algorithm for machine learning. Let's first study about machine learning before we go into what a neural network is. Machine Learning is a subfield of Artificial Intelligence that works with pattern recognition and simulation. Machine learning algorithms process vast amounts of data. The training data that you offer influences the machine learning model's behavior and properties. Once it has learned, it can anticipate the outcome if given comparable data. When it comes to learning, there are two basic categories:

1. Regression: Regression works with predicting numerical values for given input.

2. Classification: Classification is the process of categorizing data into predetermined classes (sets) based on computation [7].

There are two types of machine learning shown in figure 2.

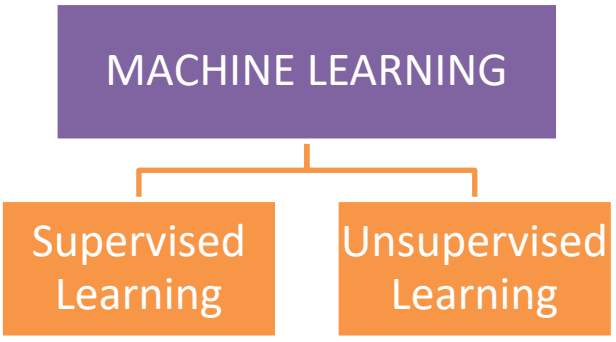

Fig. 2 Machine Learning

1. Supervised Learning

We are given a data set and already know what our right output should look like in supervised learning, with the assumption that there is a link between the input and the result. “Regression" and "classification" issues are the two types of supervised learning tasks. We are attempting to anticipate results within a continuous output in a regression issue, which means we are attempting to map input variables to some continuous function. Instead, we aim to anticipate results in a discrete output in a classification task. In other words, we are attempting to categories input variables [8].

2. Unsupervised Learning

This structure may be derived by clustering the data based on the relationships between the variables in the data.

There is no feedback based on the prediction outcomes in unsupervised learning, thus there is no teacher to correct you. It's not simply about grouping. Unsupervised learning, for example, is associative memory [9].

5. TYPES OF NEURAL NETWORK

5.1 Feed Forward Neural Network

The feed-forward neural network is the most fundamental artificial neural network utilized for typical recurring and characterization issues. There is no circling in the network. Data goes in just one way via each tier of the network. Information travels in just one direction in this organization, from the underlying hubs to the disguised hubs and yield hubs. Perception is a single-layer as well as a multi-layer neural network. Perception is a linear (binary) classifier. It is also used in supervised learning. Figure 3 depicts the architecture of the feed-forward neural network [10].

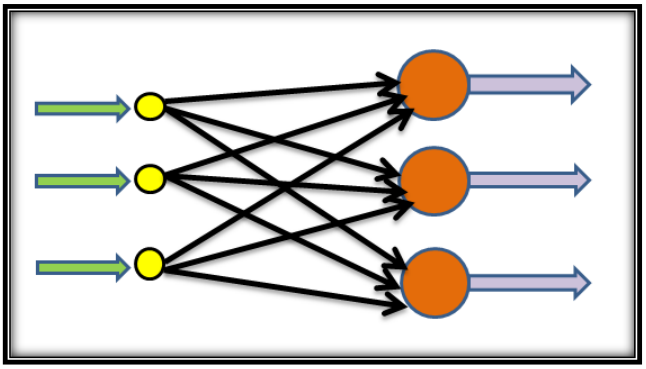

Fig. 3. Feed-Forward Neural Network

5.2 Cascade Neural Network

Cascade-forward neural networks are a type of neural network that is similar to feed-forward networks but has a link between the input layer and all preceding levels. In a three-layer network, the output layer is also directly connected to the input layer via the oversized layer [11].The benefit of this strategy is that it considers the non-linear relationship between the input and output layers rather than deleting the linear link between the two levels, as seen in Figure 4 [12].

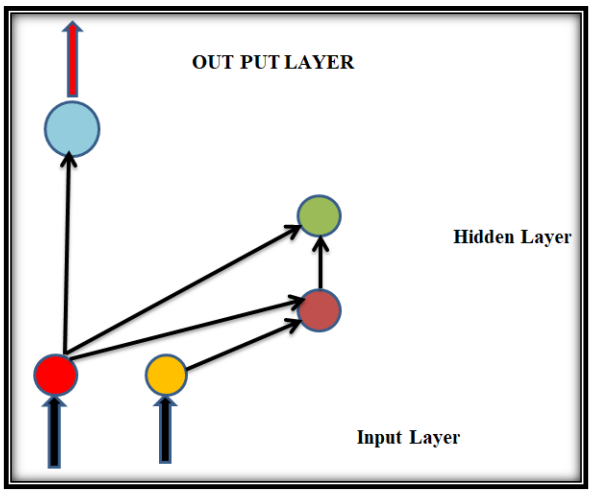

Fig. 4. Cascade Neural Networks

5.3 Fit Net Shallow Neural Network

A neural network contains beginning layers, as well as input and output layers that might be termed hidden layers. These might be referred to as encoders. These layers are buried within a thin network. There are several research that show how to fit any function into a shallow network. It must be completely overweight. A number of parameters are generated by the fit net shallow neural network. In summary, a "shallow" neural network is one that generally includes only one hidden layer [13]. As seen in Figure 5.

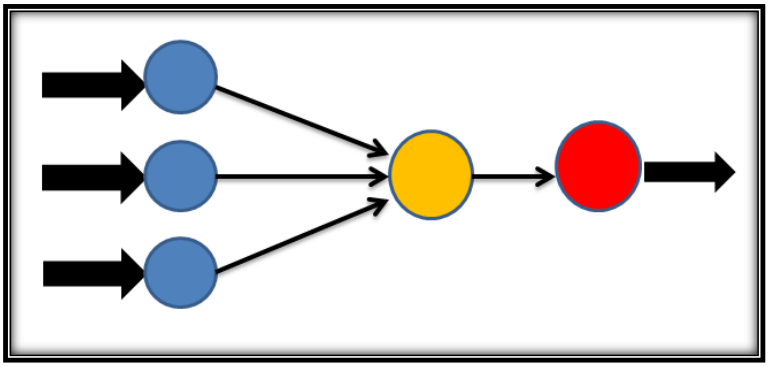

Fig. 5. Fit Net Shallow Neural Network

5.4 Shallow Neural Networks

In summary, "shallow" neural networks contain only one hidden layer, whereas "deep" neural networks include several hidden layers of varied types. Shallow neural networks include only a few layers, generally just one hidden layer. The figure below depicts a basic neuron with R inputs. A weight of w is applied to each input. The input to the transfer function b is the sum of the weighted inputs plus the bias. Any differentiable transfer function b, [14] can be used by neurons to create output.

5.5 Recurrent Neural Network

A recurrent neural network is a network that has backward linkages from the output to the input and a hidden layer. Recurrent neural networks are frequently used in deep learning, model construction, and simulation of human brain neural activity. A recurrent neural network (RNN) is an advanced artificial neural network (ANN) with a direct memory cycle. The ability to construct new network types using fixed-size input vectors. The recurrent neural networks use these input vectors. RNNs are used in image processing, language processing, and even modelling programmers that add characters to text one at a time [6]. Essentially, you have an input that is processed by a neural network, and then you have an output. The layers between input and output are known as hidden layers [15], and they allow data to be modified as depicted in Figure 6.

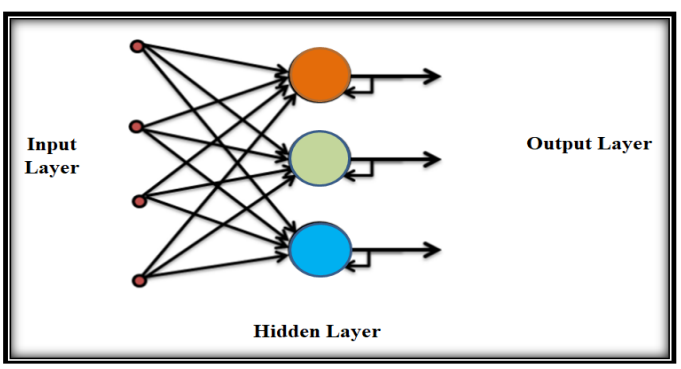

Fig. 6. Recurrent Neural Network

5.6 Convolutional Neural Network

The Convolutional Neural Network (CNN) is a well-known deep neural network. The term "matrix convolution" refers to a linear mathematical approach. A CNN contains numerous layers, including the fully-connected layer, non-linearity layer, pooling layer, and convolutional layer. The applications and outputs of the memory buffer were excellent, including the biggest image classification data set (Illustration Net), computer vision, and natural language processing (NLP).A tens or hundreds of layer convolutional neural network may learn to recognize diverse picture characteristics. The output of each

convolved picture is utilized as the input for the next layer, and each training is treated using filters of various resolutions. The filters may be changed, from simple criteria like brightness and edges to attributes that solely characterize the component [16, 17].

5.7 Recursive Neural Network

Recursive neural networks (RNNs) have a similar hierarchical structure to ANNs, but their input collection is time-limited. The recursive air community is used in RNNs for inputs that retain the hierarchy in a tree form. Here's an example of such a method: By iteratively collecting the outcome of an operation finished in a short byte of text, the parse tree of a statement is investigated RNN is designed to apply the same set of weights to variable-sized input structures, predict, or traverse specified structures in topological order, resulting in a neural network that predicts What exactly are dynamic recursive neural networks (DRNNs)? Recurrent neural networks (RvNN) are used to learn syntax and sentence sequence representations based on word embedding in natural language processing sequences and tree architectures [18]. RNNs were originally used to learn distributed representations of logical word structures. RNNs have received additional model sand rich frameworks.

6. RELATED WORK

Warsito, Budi et al. [19] Cascade-forward neural networks are similar to feed-forward networks in that they feature a link from the input and every previous layer to the next layers. In a three-layer network, the output layer is also directly connected to the input layer, in addition to the hidden layer. A two-or more layer cascade-network, like a feed-forward network, can learn any finite input-output connection arbitrarily well provided enough hidden neurons. Cascade-forward neural networks may be used to map any type of input to output. This approach has the benefit of accommodating the nonlinear link between input and output while not removing the linear relationship between the two. In this study, we use the network in the field of time series. The best architecture was computed using the incremental search approach in both the input and hidden units. The basic one was made initially, and then the more sophisticated one was built by adding components one by one. The mean square error criteria are then used to select the best one.

Li, Zewen et al. [20] a convolutional neural network (CNN) is one of the most important networks in the field of deep learning. CNN has received a great deal of attention in recent years because to its significant breakthroughs in a variety of fields, including but not limited to computer vision and natural language processing. The previous evaluations mostly focus on CNN's applicability in various circumstances rather than addressing CNN in general, and certain unique concepts offered recently are not discussed. We want to present some unique thoughts and opportunities in this rapidly expanding topic in this review. Furthermore, not only 2-D but also 1-D and multidimensional convolution is involved. Initially this analysis provides an overview of CNN's history. Second, we give an overview of several convolutions. Third, various classic and advanced CNN models are introduced, focusing on the important elements that allow them to achieve cutting-edge outcomes. Fourth, we make some inferences and propose numerous rules of thumb for function and hyper parameter selection based on experimental study. Fifth, 1-D, 2-D, and multidimensional convolution applications are discussed. Finally, as guidance for future development, certain unresolved concerns and possible avenues for CNN are presented.

Jaiswal, Ashish et al. [21] this study gives a thorough examination of self-supervised systems that employ the contrastive approach. The paper describes regularly used pretext tasks in a contrastive learning system, followed by several designs that have been developed thus far. Following that, we compare the performance of several approaches for a variety of downstream tasks such as picture categorization, object identification, and action recognition. Finally, we discuss the limitations of present methodologies and the necessity for additional techniques and future initiatives in order to make real progress.

Kim, Mingyu, et al. [22] One of the machine learning (ML) algorithms inspired by the human brain system is the artificial neural network (ANN), which was created by linking layers with artificial neurons. However, overfitting and vanishing gradient difficulties for training deep networks have plagued ANN due to inadequate processing power and insufficient learnable data. Deep neural networks exceed human or other ML skills in computer vision and speech recognition applications due to advances in computing power with graphics processing units and the availability of enormous data acquisition. These capabilities have lately been used to healthcare issues such as computer-aided detection/diagnosis, illness prediction, picture segmentation, image production, and so on. We shall describe the history, development, and uses of medical imaging in this review article.

Ding, Shifei et al. [23] The use of evolutionary algorithms (EAs) to optimize artificial neural networks (ANNs) is discussed in this study. First, we briefly describe the fundamental principles of artificial neural networks and evolutionary algorithms, and then we discuss the benefits of utilizing EAs to optimize ANNs by analyzing the advantages and disadvantages of EAs

and ANNs. We next present a brief overview of the basic theories and methods for optimizing weights, network design, and learning rules, and describe recent progress in these three areas. Finally, we speculate on further developments in this field.

Maind, Sonali et al. [24] B An Artificial Neural Network (ANN) is data processing paradigm inspired by the way organic nerve systems process information, such as the brain. The unique structure of the information processing system is a crucial component of this paradigm. It is made up of a huge number of highly linked processing components (neurons) that work together to solve issues. ANNs, like humans, learn by doing. Through a learning process, an ANN is trained for a specific application, such as pattern recognition or data categorization. In biological systems, learning entails changes to the synaptic connections that occur between neurons. This is also true of ANNs. This paper provides an overview of Artificial Neural Networks (ANN), its operation, and training. It also describes the application.

Shanmuganathan et al. [25] In this perspective, the chapter highlights the most current human brain research initiatives, after which the chapter elaborates on early Artificial Neural Network (ANN) topologies, components, associated terminologies, and hybrids.

Khan, Asifullah, et al. [26] This survey primarily focuses on the internal taxonomy found in recently reported deep CNN architectures and, as a result, divides recent CNN architectural advancements into seven separate groups. Spatial exploitation, depth, multi-path, breadth, feature-map exploitation, channel boosting, and attention are the seven categories. Additionally, a basic understanding of CNN components, current challenges, and CNN applications is offered.

Li, Yandong, Zongbo Hao et al. [27] In this survey the researcher discuss about the Convolutional Neural Network (CNN) has achieved a number of breakthrough research findings in the domains of image classification, object identification, semantic segmentation, and so on in recent years. Because of CNN's tremendous potential for feature learning and classification, it is important to examine the work in this study field. CNN's brief history and fundamental foundation were provided. Recent CNN research has been carefully summarized and analyzed in four areas: over-fitting, network structure, transfer learning, and theoretic analysis. Modern CNN-based algorithms for a variety of applications were completed and described. Finally, some shortcomings of current CNN research were identified, as well as some new insights for future CNN research.

Salehinejad, Hojjat, et al. [28] Recurrent neural networks (RNNs) may learn features and long-term relationships from time-series and sequential data. RNNs have a stack of non-linear units with at least one link forming a directed cycle. A well-trained RNN may represent any dynamical system; nevertheless, training RNNs is frequently hampered by problems in learning long-term relationships. We give an overview on RNNs as well as some recent breakthroughs for newbies and pros in the area in this paper. The principles and recent advancements are described, as well as the research difficulties.

Ketkar, Nikhil et al. [29] The first deep learning implementations were feed-forward neural networks. The information in these networks is called feed-forward because it only goes in one way (forward), from the input nodes (units) to the output units. In this chapter, we will discuss several essential principles related to feed-forward neural networks, which serve as a basis for many subjects in deep learning. We'll begin by looking at the construction of a neural network, then go on to how they're trained and utilized to make predictions. We will also look briefly at the loss functions that should be utilized in various situations, the activation functions used inside a neuron, and the many types of optimizers that may be employed for training. Finally, we'll use PyTorch to connect each of these smaller components into a full-fledged feed-forward neural network.

Caterini, Anthony et al. [30] This chapter's particular arrangement is as follows. We begin by developing a generic, feed-forward recurrent neural network. For these networks, we compute gradients of loss functions using two methods: Real-Time Recurrent Learning (RTRL) and Backpropagation through Time (BPTT). We develop these methods directly over the inner product space in which the parameters lie using our nomenclature for vector-valued mappings. We then explicitly express a vanilla RNN, which is the most basic kind of RNN, and develop RTRL and BPTT for it. We briefly address contemporary RNN versions in the context of our generic framework towards the end of the chapter.

7. NEURAL NETWORKS CAN PROVIDE ADDITIONAL SECURITY LAYERS TO DATA SECURITY.

Several intriguing applications of neural networks are being employed to improve data security. Here are a few instances of data security solutions that have benefited from neural network advancements [31].

7.1 IDS/IPSs (intrusion detection and prevention systems)

In the past, intrusion detection and prevention systems monitored network activity and stopped intrusions using machine learning techniques or signature-based detection. These systems have several drawbacks, such as a high rate of false positives and an inability to recognize new attacks or indications of advanced persistent threats (APTs). Deep learning, convolutional neural networks, and recurrent neural networks are a few examples of the neural network technology that some modern IDS and IPS solutions are starting to use to analyses network traffic more accurately and address other shortcomings of conventional systems. Even when attacks deviate from known attack vectors, ANNs are better at spotting trends and pinpointing breaches. Additionally, many problems can be automatically fixed by ANNs without the need for human intervention. As a result, your team will spend less time investigating false positives and neutralizing small threats [32].

7.2 Monitoring of User and Entity Activity

You can use ANNs to monitor and examine authorized user behavior on your network in addition to identifying breaches. Insider attacks pose a serious threat to the security of your data, yet conventional security measures frequently miss them since they originate from internal user accounts that are authorized to access your network. In order to identify unusual user account behavior on networks, user behavior analytics (UBA) tools have been available for a while [33].

7.3 Antimalware

Neural network-based antimalware programmers overcome this issue in a few intriguing ways. To start, you can monitor systems and networks with ANNs to look for any unusual behavior that would point to a malware infection or security breach. Second, neural networks can estimate how new malware might behave by learning from previous infections (or from threat signature databases). Remember that ANNs have an edge over signature-based antimalware systems due to their capacity to learn from and adapt prior experiences to new circumstances. This is one of their key characteristics [34].

7.4 Phishing and Spam Detection

Natural language processing (NLP) is a technique that artificial neural networks can employ to examine email message content. This means that an ANN spam filter really reads the message and analyses its content to determine whether or not it seems suspicious, as opposed to scanning an email to hunt for certain spam-related keywords. Additionally, this technology makes adjustments based on the tastes and habits of each user's email correspondence [35].

8. CONCLUSION

Neural networks, also known as artificial neural networks (ANNs) that provide the basis of deep learning approaches. Their name and shape are derived from the human brain, and they mimic how genuine neurons interact with one another. Artificial neural networks (ANNs) are massively parallel systems made up of many linked basic processors. This article discusses artificial neural networks and their fundamental kinds. This research review describes the basic neuron and the artificial computer model, as well as the reasoning behind constructing ANNs. It explains, some of the most common ANN types. This paper highlights some of the most significant advances in neural network classification research.

Funding

The author's states that this research did not receive any funding from any institutions or sponsors.

Conflicts of Interest

The authors confirm that they have no conflicts of interest related to the publication of this paper.

Acknowledgment

We would like to express our deep appreciation for the valuable suggestions and insightful feedback offered by the anonymous reviewers.

References

[1] Abiodun, I. Oludare, J. Aman, E. Abiodun Esther Omolara, K. Victoria Dada, A. Malah Umar, U. Linus Okafor, H. Arshad, A. Aminu Kazaure, U. Gana, and M. Ubale Kiru, "Comprehensive review of artificial neural network applications to pattern recognition," IEEE Access, vol. 7, 2019, pp. 158820-158846.

[2] S. Singu, "Comparative Analysis of Artificial Neural Networks," International Journal of Machine Learning for Sustainable Development, vol. 3, no. 4, 2021.

[3] F. Fan, J. Xiong, M. Li, and G. Wang, "On interpretability of artificial neural networks: A survey," IEEE Transactions on Radiation and Plasma Medical Sciences, vol. 5, no. 6, 2021, pp. 741-760.

[4] S. Shams, A. Jahani, S. Kalantary, M. Moeinaddini, and N. Khorasani, "The evaluation on artificial neural networks (ANN) and multiple linear regressions (MLR) models for predicting SO2 concentration," Urban Climate, vol. 37, 2021, p. 100837.

[5] L. Batina, S. Bhasin, D. Jap, and S. Picek, "CSI NN: Reverse engineering of neural network architectures through electromagnetic side channel," 2019.

[6] J. T. Hancock and T. M. Khoshgoftaar, "Survey on categorical data for neural networks," Journal of Big Data, no. 1, 2020, pp. 1-41.

[7] A. Janiesch, P. Zschech, and K. Heinrich, "Machine learning and deep learning," Electronic Markets, vol. 31, no. 3, 2021, pp. 685-695.

[8] Y. Ouali, C. Hudelot, and M. Tami, "An overview of deep semi-supervised learning," arXiv preprint arXiv:2006.05278, 2020.

[9] O. P. Pedro, A. Almahairi, R. Benmalek, F. Golemo, and A. C. Courville, "Unsupervised learning of dense visual representations," Advances in Neural Information Processing Systems 33, 2020, pp. 4489-4500.

[10] M. V. Narkhede, P. P. Bartakke, and M. S. Sutaone, "A review on weight initialization strategies for neural networks," Artificial Intelligence Review, vol. 55, no. 1, 2022, pp. 291-322.

[11] F. Zhou, X. Xu, G. Trajcevski, and K. Zhang, "A survey of information cascade analysis: Models, predictions, and recent advances," ACM Computing Surveys (CSUR), vol. 54, no. 2, 2021, pp. 1-36.

[12] M. M. Bejani and M. Ghatee, "A systematic review on overfitting control in shallow and deep neural networks," Artificial Intelligence Review, 2021, pp. 1-48.

[13] J. W. Siegel and J. Xu, "Characterization of the variation spaces corresponding to shallow neural networks," Constructive Approximation, 2023, pp. 1-24.

[14] W. De Mulder, S. Bethard, and M.-F. Moens, "A survey on the application of recurrent neural networks to statistical language modeling," Computer Speech & Language, vol. 30, no. 1, 2015, pp. 61-98.

[15] A. R. Sarvamangala and R. V. Kulkarni, "Convolutional neural networks in medical image understanding: a survey," Evolutionary intelligence, vol. 15, no. 1, 2022, pp. 1-22.

[16] F. M. Bianchi, E. Maiorino, M. C. Kampffmeyer, A. Rizzi, and R. Jenssen, "Recurrent neural networks for short-term load forecasting: an overview and comparative analysis," 2017.

[17] H. Hewamalage, C. Bergmeir, and K. Bandara, "Recurrent neural networks for time series forecasting: Current status and future directions," International Journal of Forecasting, vol. 37, no. 1, 2021, pp. 388-427.

[18] P. K. Bediako, "Within the TensorFlow Implementation Framework, a Long Short-Term Memory Recurrent Neural Network is used to identify DDoS flooding assaults," 2017.

[19] B. Warsito, R. Santoso, and H. Yasin, "Cascade forward neural network for time series prediction," Journal of Physics: Conference Series, vol. 1025, no. 1, 2018, p. 012097.

[20] Z. Li, F. Liu, W. Yang, S. Peng, and J. Zhou, "A survey of convolutional neural networks: analysis, applications, and prospects," IEEE transactions on neural networks and learning systems, 2021.

[21] Jaiswal, A. R. Babu, M. Z. Zadeh, D. Banerjee, and F. Makedon, "A survey on contrastive self-supervised learning," Technologies, vol. 9, no. 1, 2020.

[22] M. Kim et al., "Deep learning in medical imaging," Neurospine, vol. 16, no. 4, 2019, pp. 657.

[23] S. Ding et al., "Evolutionary artificial neural networks: a review," Artificial Intelligence Review, vol. 39, no. 3, 2013.

[24] S. B. Maind and P. Wankar, "Research paper on basic of artificial neural network," International Journal on Recent and Innovation Trends in Computing and Communication, vol. 2, no. 1, 2014, pp. 96-100.

[25] S. Shanmuganathan, "Artificial neural network modelling: An introduction," Springer International Publishing, 2016.

[26] Khan, A. Sohail, U. Zahoora, and A. S. Qureshi, "A survey of the recent architectures of deep convolutional neural networks," Artificial Intelligence Review, vol. 53, 2020, pp. 5455-5516.

[27] Y. Li, Z. Hao, and H. Lei, "Survey of convolutional neural network," Journal of Computer Applications, vol. 36, no. 9, 2016, pp. 2508.

[28] H. Salehinejad et al., "Recent advances in recurrent neural networks," arXiv preprint arXiv:1801.01078, 2017.

[29] N. Ketkar and J. Moolayil, "Feed-forward neural networks," Deep Learning with Python: Learn Best Practices of Deep Learning Models with PyTorch, 2021, pp. 93-131.

[30] L. Caterini and D. E. Chang, "Recurrent neural networks," Deep neural networks in a mathematical framework, 2018, pp. 59-79.

[31] M. Pawlicki, R. Kozik, and M. Choraś, "A survey on neural networks for (cyber-) security and (cyber-) security of neural networks," Neurocomputing, vol. 500, 2022, pp. 1075-1087.

[32] A. B. Mandru et al., "Assessing deep neural network and shallow for network intrusion detection systems in cyber security," in Computer Networks and Inventive Communication Technologies: Proceedings of Fourth ICCNCT 2021, Springer Singapore, 2022, pp. 703-713.

[33] M. A. Salitin and A. H. Zolait, "The role of User Entity Behavior Analytics to detect network attacks in real time," in 2018 International Conference on Innovation and Intelligence for Informatics, Computing, and Technologies (3ICT), IEEE, 2018, pp. 1-5.

[34] S. Seraj, S. Khodambashi, M. Pavlidis, and N. Polatidis, "HamDroid: permission-based harmful android anti-malware detection using neural networks," Neural Computing and Applications, vol. 34, no. 18, 2022, pp. 15165-15174.

[35] S. Sheikhi, M. T. Kheirabadi, and A. Bazzazi, "An effective model for SMS spam detection using content-based features and averaged neural network," International Journal of Engineering, vol. 33, no. 2, 2020, pp. 221-228.