STA447 / 2006

Typed Lecture Notes and Midterms

Lecture 1 – Lecture 10

with Midterm 1 after Lecture 4 and Midterm 2 after Lecture 7

Fully editable

LaTeX version

Contents

1 Lecture 1 **2**

1.1 Course overview . . . 2
1.2 Definition of a discrete-time Markov chain . . . 2
1.3 The Markov property . . . 3
1.4 Example: frog on lily pads . . . 3
1.5 Example: coin tossing . . . 4
1.6 Example: Ehrenfest's urn . . . 5
1.7 A non-example . . . 6
1.8 A basic consequence of the Markov property . . . 6
1.9 Matrix notation and multi-step transitions . . . 7
1.10 Chapman–Kolmogorov equation . . . 8
1.11 Counting visits to a state . . . 8
1.12 Hitting probabilities . . . 9
1.13 A first geometric law . . . 9
1.14 Strong Markov viewpoint . . . 11
1.15 Generalization to different starting and target states . . . 12
1.16 Consequences for the distribution of $N(i)$ . . . 12
1.17 Geometric random variable . . . 12
1.18 Expected number of visits . . . 14
1.19 Recurrence state theorem . . . 15
1.20 Example: simple random walk on $\mathbb{Z}$ . . . 16
1.21 Summary of Lecture 1 . . . 18

2 Lecture 2 **19**

2.1 Recall from Lecture 1: recurrence criterion . . . 19
2.2 A detour: the Borel–Cantelli lemma . . . 19
2.3 Simple random walk in one dimension . . . 20
2.4 A higher-dimensional walk built from independent coordinates . . . 20
2.5 Hitting probabilities . . . 21
2.6 A small example: computing some f_{ij} . . . 21
2.7 First-step expansion for f_{ij} . . . 22
2.8 Example: gambler's ruin . . . 23

2.9 Gambler's ruin when $p = 1/2$ . . . 23
2.10 Gambler's ruin when $p \neq 1/2$ . . . 24
2.11 Communication and irreducibility . . . 24
2.12 Recurrence is a class property . . . 25
2.13 The sum lemma . . . 25
2.14 Proof that recurrence is shared inside a communicating class . . . 26
2.15 What about the sum of n-step transition probabilities? . . . 27
2.16 Finite irreducible chains are recurrent . . . 28
2.17 Goal: a criterion in terms of f_{ij} . . . 28
2.18 A technical tool: the hit lemma . . . 28
2.19 Proof of the f-lemma . . . 29
2.20 Infinite returns lemma . . . 29
2.21 Recurrence equivalence theorem . . . 30
2.22 Important warning: the existential version of $f_{ij} = 1$ is not enough . . . 31
2.23 Summary . . . 32

3 Lecture 3 **33**

3.1 Recall: recurrence and transience in an irreducible chain . . . 33
3.2 Equivalent criteria for recurrence . . . 33
3.3 A counterexample: irreducible and transient, but $f_{ij} = 1$ for some pair . . . 35
3.4 Reducible Markov chains on a finite state space . . . 36
3.5 The main long-run question . . . 37
3.6 Stationary distributions and stationary measures . . . 37
3.7 Example: the frog walk on 20 states . . . 38
3.8 Doubly stochastic matrices . . . 38
3.9 Reversibility and detailed balance . . . 39
3.10 Example: the Ehrenfest urn . . . 39
3.11 Stationary does not imply reversible . . . 40
3.12 Existence and uniqueness of stationary distributions . . . 41
3.13 Vanishing probabilities imply non-existence of a stationary distribution . . . 41
3.14 A vanishing lemma . . . 42
3.15 Examples . . . 43
3.16 Why stationarity alone does not guarantee convergence . . . 45
3.17 Period and aperiodicity . . . 46

3.18 The convergence theorem . . . 47
3.19 Summary . . . 49

4 Lecture 4 **50**
4.1 Logistics note . . . 50
4.2 Main convergence theorem . . . 50
4.3 The key idea: Markov forgetting . . . 50
4.4 Comparing two copies of the chain . . . 51
4.5 Stationarity for the product chain . . . 51
4.6 Why irreducibility of the base chain is not enough . . . 51
4.7 Aperiodicity gives eventual positivity . . . 52
4.8 Irreducibility of the product chain . . . 52
4.9 Hitting a common reference state . . . 53
4.10 Proof of Markov forgetting by coupling . . . 53
4.11 From forgetting to convergence to stationarity . . . 54
4.12 Initial distributions, not just initial states . . . 54
4.13 What changes in the periodic case? . . . 55
4.14 The next question: when does a stationary distribution exist? . . . 55
4.15 Excursion decomposition and the heuristic formula . . . 56
4.16 A stationary measure built from one excursion . . . 56
4.17 When can the stationary measure be normalized? . . . 58
4.18 Classifying irreducible chains . . . 59
4.19 Long-run frequency of visits . . . 59
4.20 Proof via i.i.d. excursion blocks . . . 60
4.21 Recovering the stationary distribution formula . . . 61
4.22 Summary . . . 62

5 Midterm 1 **63**

6 Lecture 5 **73**
6.1 An additional Markov chain topic: MCMC . . . 73
6.2 Metropolis–Hastings algorithm . . . 73
6.3 Martingales: the main new topic . . . 74
6.4 Basic example: simple random walk . . . 74
6.5 A corrected martingale . . . 75

6.6 Filtrations and notation . . . 76
6.7 A warning: optional evaluation is subtle . . . 76
6.8 Stopping times . . . 77
6.9 Examples of stopping times . . . 77
6.10 Strong Markov property . . . 78
6.11 Bounded optional stopping lemma . . . 78
6.12 A more general optional stopping theorem . . . 79
6.13 Proof idea of the general OST . . . 79
6.14 Application: gambler's ruin . . . 80
6.15 Symmetric case . . . 80
6.16 Asymmetric case . . . 81
6.17 Summary . . . 82

7 Lecture 6(a) 83

7.1 Intuition: martingales as "fair games" . . . 83
7.2 Filtration and information available up to time n . . . 83
7.3 Definition of a martingale . . . 83
7.4 First examples of martingales . . . 84
7.5 A useful derived martingale: Xn2 - n . . . 84
7.6 Conditioning further back in time . . . 85
7.7 Stopping times . . . 85
7.8 Examples and a non-example . . . 86
7.9 Basic operations on stopping times . . . 86
7.10 Why optional stopping is not automatically true . . . 87
7.11 Optional stopping in the bounded-time case . . . 87
7.12 A more general optional stopping theorem . . . 88
7.13 A very useful special case . . . 89
7.14 Gambler's ruin revisited: symmetric case . . . 90
7.15 Gambler's ruin revisited: asymmetric case . . . 91
7.16 Expected duration of gambler's ruin . . . 92
7.17 What this lecture is really teaching . . . 93
7.18 Summary . . . 94

8 Lecture 6(b) 95

8.1 Recall: the optional stopping theorem . . . 95

8.2 Application: expected duration in gambler's ruin . . . 95
8.3 Why the easy OST cases do not apply here . . . 96
8.4 Checking the OST tail condition directly . . . 96
8.5 Exponential tail bound for hitting times on a finite state space . . . 97
8.6 Completing the OST check for gambler's ruin . . . 98
8.7 Motivation for uniform integrability . . . 98
8.8 Definition of uniform integrability . . . 98
8.9 Uniform integrability gives the OST tail condition . . . 99
8.10 A very useful sufficient condition: uniform L^2-bounds . . . 99
8.11 Example and non-example . . . 100
8.12 Wald's identity . . . 100
8.13 Doob's maximal inequality: the nonnegative case . . . 102
8.14 Martingale convergence: what should it mean? . . . 103
8.15 Martingale convergence theorem . . . 103
8.16 The up-crossing idea . . . 104
8.17 A trading strategy attached to an interval . . . 104
8.18 The up-crossing inequality . . . 105
8.19 From bounded expected up-crossings to almost sure convergence . . . 105
8.20 Summary . . . 106

9 Lecture 7 **107**

9.1 Administrative note . . . 107
9.2 Martingale convergence: the main theorem . . . 107
9.3 Why non-convergence means infinite up-crossings . . . 107
9.4 The trading strategy behind up-crossings . . . 108
9.5 Why the wealth process is again a martingale . . . 108
9.6 Bounding the number of up-crossings . . . 109
9.7 Proof of the martingale convergence theorem . . . 109
9.8 A warning: almost sure convergence does not preserve expectation . . . 110
9.9 Recall: uniform integrability . . . 111
9.10 Uniform integrability plus almost sure convergence gives L1 convergence . . . 111
9.11 Examples of uniformly integrable martingales . . . 112
9.12 Uniformly integrable martingales and generalized optional stopping . . . 113
9.13 Example: a positive martingale that still goes to zero . . . 114

9.14 Doob's Lp maximal inequality . . . 115
9.15 Lp convergence under a uniform p-th moment bound . . . 116
9.16 Doob martingales . . . 116
9.17 Why a Doob martingale is uniformly integrable . . . 117
9.18 Identifying the terminal variable . . . 118
9.19 Application to Bayesian statistics . . . 118
9.20 Summary . . . 119

10 Midterm 2 **119**

11 Lecture 8 **156**
11.1 From one-dimensional simple random walk to Brownian motion . . . 156
11.2 Descriptive definition of Brownian motion . . . 157
11.3 Brownian motion is Markov and strong Markov . . . 158
11.4 Brownian motion is a martingale . . . 158
11.5 Continuous-time stopping times . . . 158
11.6 Continuous-time optional stopping theorem . . . 159
11.7 Application: continuous-time gambler's ruin for Brownian motion . . . 159
11.7.1 The hitting probability . . . 160
11.7.2 A second martingale . . . 160
11.7.3 Why OST applies to Mt . . . 161
11.7.4 Computing E[T . . . 163
11.8 Reflection principle . . . 164
11.8.1 Decomposing the event . . . 164
11.8.2 A rigorous argument using strong Markov . . . 165
11.8.3 A more detailed joint-distribution identity . . . 166
11.8.4 A corollary . . . 166
11.8.5 Formal Statement of Reflection Principle . . . 167
11.9 Stochastic calculus: why ordinary calculus breaks down . . . 168
11.10 The practical problem: define the stochastic integral . . . 168
11.11 Detailed example: Yt = Bt . . . 169
11.11.1 Decomposition of the sum . . . 169
11.11.2 Left-endpoint choice . . . 170
11.11.3 Midpoint choice . . . 170
11.12 Why choose left endpoints? Martingale and L2-isometry . . . 171

11.13 Roadmap for defining the Itô integral . . . 172
11.14 Step 1: piecewise-constant adapted processes . . . 172
11.14.1 Martingale property . . . 173
11.14.2 Itô isometry for simple processes . . . 173
11.15 Step 2: extension to adapted continuous processes . . . 174
11.16 Basic properties of the Itô integral . . . 175
11.17 Summary . . . 176

12 Lecture 9 **177**
12.1 Recall from Lecture 8: the Itô integral . . . 177
12.2 Why the ordinary fundamental theorem of calculus fails . . . 177
12.3 Counterexample: f(x) = x squared over 2 . . . 178
12.4 Statement of Itô's formula for Brownian motion . . . 178
12.5 Checking the counterexample again . . . 179
12.6 Systematic martingale construction from Itô's formula . . . 179
12.7 Remark on midpoint sums and the Stratonovich integral . . . 180
12.8 Proof idea of Ito's formula for f(Bt) . . . 180
12.9 The key step: Brownian quadratic variation . . . 181
12.10 Extending from Bt to general Ito processes . . . 183
12.11 General Itô formula: time-homogeneous version . . . 184
12.12 Proof idea for the general formula . . . 187
12.13 Quadratic variation . . . 188
12.14 Quadratic variation of an Itô process . . . 189
12.15 Conclusion: general Itô formula . . . 190
12.16 Time-inhomogeneous Itô formula . . . 190
12.17 Proof idea for the time-inhomogeneous version . . . 190
12.18 Example: the exponential martingale . . . 191
12.19 Product rule in stochastic calculus . . . 192
12.20 Cross variation . . . 192
12.21 How Lecture 9 fits into the stochastic-calculus picture . . . 193
12.22 Summary . . . 194

13 Lecture 10 **195**
13.1 Administrative note . . . 195
13.2 Recall: one-dimensional Itô formula . . . 195

13.3 Example 1: the Ornstein–Uhlenbeck process . . . 196
13.4 Example 2: geometric Brownian motion . . . 197
13.5 Multivariate Brownian motion . . . 198
13.6 General multidimensional Itô formula . . . 199
13.7 Continuous-time, discrete-space processes . . . 199
13.8 Review: Poisson random variables . . . 199
13.9 The Poisson process . . . 200
13.10 Basic facts about the Poisson process . . . 200
13.11 Axiomatic characterization of the Poisson process . . . 201
13.12 Poisson point processes . . . 201
13.13 Superposition and thinning . . . 203
13.14 Continuous-time Markov chains . . . 204
13.15 Example: the Poisson process as a CTMC . . . 204
13.16 The generator of a CTMC . . . 205
13.17 From generator to transition semigroup . . . 206
13.18 Generator of the Poisson process . . . 207
13.19 Constructive description of a CTMC . . . 209
13.20 Relation with discrete-time Markov chains . . . 211
13.21 Final review list from the lecture . . . 211
13.22 Summary . . . 212

14 Final Exam 2024 **213**

15 Final Exam 2025 **222**

16 Final Review **231**

16.1 Lecture 1: Discrete-time Markov chains . . . 231
16.2 Lecture 2: Recurrence criterion and first-step methods . . . 232
16.3 Lecture 3: Irreducible chains . . . 233
16.4 Lecture 4: Stationarity and convergence . . . 234
16.5 Midterm 1 review topics . . . 235
16.6 Lecture 5: Martingales and stopping times . . . 235
16.7 Lecture 6: Uniform integrability, Wald, maximal inequalities . . . 236
16.8 Lecture 7: Martingale convergence and UI . . . 237
16.9 Midterm 2 review topics . . . 238

16.10 Lecture 8: Brownian motion and Itô integral . . . 238
16.11 Lecture 9: Itô's formula and quadratic variation . . . 240
16.12 Lecture 10: SDE examples, Poisson processes, and CTMCs . . . 242

17 Important Theorems for Midterms and Finals **245**
17.1 Discrete-time Markov chains . . . 245
17.2 Martingales, stopping times, and convergence . . . 248
17.3 Brownian motion and stochastic calculus . . . 249
17.4 Poisson processes . . . 251
17.5 A few formulas that were especially exam-relevant . . . 252

18 Common SDEs **252**
18.1 General form of an SDE . . . 253
18.2 Brownian motion . . . 253
18.3 Brownian motion with drift . . . 253
18.4 Geometric Brownian motion . . . 254
18.5 Exponential martingale . . . 254
18.6 Ornstein–Uhlenbeck process . . . 255
18.7 A linear SDE . . . 256
18.8 Cox–Ingersoll–Ross process . . . 256
18.9 A general diffusion . . . 256
18.10 Common methods for solving SDEs . . . 257
18.11 Summary . . . 258

1. Lecture 1

1.1. Course overview

This course studies stochastic processes, namely random objects indexed by time:

$$(X_t : t \in T).$$

There are two basic choices for the time index set:

- **Discrete time:** for example $T = \mathbb{N} = \{0, 1, 2, \dots\}$;
- **Continuous time:** for example $T = \mathbb{R}_+ = [0, \infty)$.

There are also different choices for the state space:

- **Discrete state space:** finite or countably infinite;
- **Continuous state space:** for example $\mathbb{R}$ or $\mathbb{R}^d$.

The main topics of the course are:

- **Markov chains / Markov processes,** where the future depends on the present state;
- **Martingales,** which model "fair game" phenomena;
- **Brownian motion and stochastic calculus.**

Lecture 1 begins with the simplest setting: **discrete-time, discrete-state, time-homogeneous Markov chains**.

1.2. Definition of a discrete-time Markov chain

Let S be a finite or countably infinite set. A discrete-time Markov chain is a stochastic process

$$(X_0, X_1, X_2, \dots), \qquad X_t \in S,$$

specified by the following three ingredients.

Definition 1.1 (Discrete-time, discrete-state, time-homogeneous Markov chain)**.** A process $(X_t)_{t \geq 0}$ on S is called a Markov chain if:

(i) **State space:** S is finite or countably infinite.

(ii) **Initial distribution:** there is a probability vector

$$\nu = (\nu_i)_{i \in S}, \qquad \nu_i = \mathbb{P}(X_0 = i),$$

with

$$\nu_i \geq 0, \qquad \sum_{i \in S} \nu_i = 1.$$

(iii) **Transition probabilities:** there is a matrix

$$P = (p_{ij})_{i,j \in S},$$

where

$$p_{ij} = \mathbb{P}(X_{t+1} = j \mid X_t = i), \qquad i, j \in S,$$

and for each fixed i,

$$p_{ij} \geq 0, \qquad \sum_{j \in S} p_{ij} = 1.$$

Moreover, the chain satisfies the *Markov property*

$$\mathbb{P}(X_{t+1} = j \mid X_0 = i_0, X_1 = i_1, \ldots, X_t = i) = \mathbb{P}(X_{t+1} = j \mid X_t = i) = p_{ij}.$$

The word *time-homogeneous* means that the transition law does *not* depend on t. In other words, the same matrix P is used at every step.

1.3. The Markov property

Informally, the Markov property says:

> Given the present, the future is independent of the past.

More precisely, once the current state X_t is known, the whole earlier history

$$X_0, X_1, \ldots, X_{t-1}$$

becomes irrelevant for predicting the next step.

This does *not* mean the process has no memory at all. It means that all relevant information from the past is summarized by the current state.

For a Markov chain,

$$\mathbb{P}(X_{t+1} = j \mid X_0, \ldots, X_t) = \mathbb{P}(X_{t+1} = j \mid X_t) = p_{X_t j}.$$

So the next move depends only on the current state.

1.4. Example: frog on lily pads

Consider a frog moving on 20 lily pads arranged in a circle. Let

$$X_t = \text{the index of the lily pad occupied by the frog at time } t.$$

Then the state space is

$$S = \{1, 2, 3, \ldots, 20\}.$$

Suppose the frog starts at lily pad 3, so the initial distribution is

$$\nu_i = \begin{cases} 1, & i = 3, \\ 0, & i \neq 3. \end{cases}$$

At each step, the frog:

- stays where it is with probability 1/3,
- moves one pad clockwise with probability 1/3,
- moves one pad counterclockwise with probability 1/3.

Thus the transition probabilities are

$$p_{ij} = \begin{cases} \frac{1}{3}, & j = i, \\ \frac{1}{3}, & j \equiv i + 1 \pmod{20}, \\ \frac{1}{3}, & j \equiv i - 1 \pmod{20}, \\ 0, & \text{otherwise}. \end{cases}$$

So from each state there are exactly three possible next moves. This is a typical finite-state Markov chain.

Remark 1.2. The transition matrix here is a 20×20 matrix. Most entries are 0, and each row has exactly three entries equal to 1/3.

1.5. Example: coin tossing

At each time $t = 1, 2, 3, \ldots$, toss a fair coin and let

$$X_t = \text{number of heads obtained in the first } t \text{ tosses.}$$

Then the state space is

$$S = \{0, 1, 2, \ldots\}.$$

The chain starts at

$$X_0 = 0,$$

so

$$\nu_0 = 1, \qquad \nu_i = 0 \quad (i \geq 1).$$

If the current value is i, then after one more toss:

- the value stays at i if the new toss is tails;
- the value moves to $i + 1$ if the new toss is heads.

Hence

$$p_{ij} = \begin{cases} \frac{1}{2}, & j = i, \\ \frac{1}{2}, & j = i+1, \\ 0, & \text{otherwise.} \end{cases}$$

This is again a Markov chain, because given the current number of heads, the next step depends only on the next toss, not on the whole previous sequence.

1.6. Example: Ehrenfest's urn

There are two boxes containing a total of d balls. Initially, box 1 contains a balls and box 2 contains b balls, where

$$d = a + b.$$

At each step:

- choose one of the d balls uniformly at random;
- move that ball to the opposite box.

Let

$$X_t = \text{number of balls in box 1 at time } t.$$

Then the state space is

$$S = \{0, 1, 2, \ldots, d\}.$$

Since initially there are a balls in box 1,

$$\nu_i = \begin{cases} 1, & i = a, \\ 0, & i \neq a. \end{cases}$$

If $X_t = i$, then box 1 currently contains i balls and box 2 contains $d - i$ balls.
So:

- with probability $\frac{d-i}{d}$, we choose a ball from box 2 and move it into box 1, so

$$X_{t+1} = i + 1;$$

- with probability $\frac{i}{d}$, we choose a ball from box 1 and move it into box 2, so

$$X_{t+1} = i - 1.$$

Therefore

$$p_{ij} = \begin{cases} \frac{d-i}{d}, & j = i+1, \\ \frac{i}{d}, & j = i-1, \\ 0, & \text{otherwise.} \end{cases}$$

This is a fundamental example of a Markov chain arising from a physical model.

1.7. A non-example

Not every stochastic process is Markov.

For example, suppose the next move depends not only on the current state X_t, but also on whether the chain visited some state earlier in its history. Then the transition rule depends on the past before time t, so the Markov property fails.

So the essential feature of a Markov chain is:

> the future depends on the present state only, not on the whole past trajectory.

1.8. A basic consequence of the Markov property

Throughout, for $i \in S$, write

$$\mathbb{P}_i(\,\cdot\,) = \mathbb{P}(\,\cdot \mid X_0 = i), \qquad \mathbb{E}_i[\cdot] = \mathbb{E}[\cdot \mid X_0 = i].$$

The Markov property immediately gives the following important factorization rule.

Proposition 1.3 (Path probability)**.** *For any states $i_0, i_1, \ldots, i_n \in S$,*

$$\mathbb{P}(X_0 = i_0, X_1 = i_1, \ldots, X_n = i_n) = \nu_{i_0}\, p_{i_0 i_1} p_{i_1 i_2} \cdots p_{i_{n-1} i_n}.$$

Proof. Using conditional probability,

$$\begin{aligned} &\mathbb{P}(X_0 = i_0, X_1 = i_1, \ldots, X_n = i_n) \\ &\quad = \mathbb{P}(X_0 = i_0)\, \mathbb{P}(X_1 = i_1 \mid X_0 = i_0)\, \mathbb{P}(X_2 = i_2 \mid X_0 = i_0, X_1 = i_1) \cdots \\ &\qquad \cdots \mathbb{P}(X_n = i_n \mid X_0 = i_0, \ldots, X_{n-1} = i_{n-1}). \end{aligned}$$

Now apply the Markov property at each step:

$$\mathbb{P}(X_{m+1} = i_{m+1} \mid X_0 = i_0, \ldots, X_m = i_m) = p_{i_m i_{m+1}}.$$

So the product reduces to

$$\nu_{i_0}\, p_{i_0 i_1} p_{i_1 i_2} \cdots p_{i_{n-1} i_n}.$$

□

A useful special case is:

$$\mathbb{P}(X_0 = i_0, X_1 = i_1, X_2 = i_2) = \nu_{i_0} p_{i_0 i_1} p_{i_1 i_2}.$$

If we sum over the intermediate state i_1, we get

$$\mathbb{P}(X_0 = i_0, X_2 = i_2) = \nu_{i_0} \sum_{i_1 \in S} p_{i_0 i_1} p_{i_1 i_2}.$$

This is exactly matrix multiplication.

1.9. Matrix notation and multi-step transitions

For matrices $A = (a_{ik})$ and $B = (b_{kj})$ indexed by S, define

$$[AB]_{ij} = \sum_{k \in S} a_{ik} b_{kj}.$$

When S is countably infinite, these are infinite-dimensional matrices. In general one must be careful with convergence, but for probability transition matrices the relevant sums are nonnegative and bounded by 1, so the formulas below make sense.

Definition 1.4 (n-step transition probabilities)**.** For $n \geq 0$, define

$$p_{ij}^{(n)} = \mathbb{P}(X_n = j \mid X_0 = i) = \mathbb{P}_i(X_n = j).$$

For $n = 1$, this is just

$$p_{ij}^{(1)} = p_{ij}.$$

For $n = 0$, by convention,

$$p_{ij}^{(0)} = \begin{cases} 1, & i = j, \\ 0, & i \neq j. \end{cases}$$

Proposition 1.5. *For every integer $n \geq 0$,*

$$\mathbb{P}_i(X_n = j) = [P^n]_{ij}.$$

Equivalently,

$$p_{ij}^{(n)} = [P^n]_{ij}.$$

Also, if the initial distribution is ν, then

$$\mathbb{P}(X_n = j) = [\nu P^n]_j.$$

The matrix power P^n describes the n-step movement of the chain:

$$p_{ij}^{(n)} = [P^n]_{ij}, \qquad \mathbb{P}(X_n = j) = [\nu P^n]_j.$$

1.10. Chapman–Kolmogorov equation

The n-step transition probabilities satisfy the most important algebraic identity in the theory.

Theorem 1.6 (Chapman–Kolmogorov equation)**.** *For all $m, n \geq 0$ and all $i, j \in S$,*

$$p_{ij}^{(m+n)} = \sum_{k \in S} p_{ik}^{(m)} p_{kj}^{(n)}.$$

Equivalently,

$$P^{m+n} = P^m P^n.$$

Proof. Condition on the state at time m:

$$\begin{aligned} p_{ij}^{(m+n)} &= \mathbb{P}_i(X_{m+n} = j) \\ &= \sum_{k \in S} \mathbb{P}_i(X_{m+n} = j, X_m = k) \\ &= \sum_{k \in S} \mathbb{P}_i(X_{m+n} = j \mid X_m = k) \mathbb{P}_i(X_m = k). \end{aligned}$$

By the Markov property,

$$\mathbb{P}_i(X_{m+n} = j \mid X_m = k) = \mathbb{P}_k(X_n = j) = p_{kj}^{(n)},$$

and

$$\mathbb{P}_i(X_m = k) = p_{ik}^{(m)}.$$

Hence

$$p_{ij}^{(m+n)} = \sum_{k \in S} p_{ik}^{(m)} p_{kj}^{(n)}.$$

□

To go from i to j in $m + n$ steps, sum over all possible intermediate states k at time m:

$$p_{ij}^{(m+n)} = \sum_{k \in S} p_{ik}^{(m)} p_{kj}^{(n)}.$$

1.11. Counting visits to a state

To study long-run behavior, define the total number of visits to a state after time 0.

Definition 1.7. For $j \in S$, let

$$N(j) = \sum_{t=1}^{\infty} \mathbf{1}_{\{X_t = j\}}.$$

So $N(j)$ counts how many times the chain visits state j at times $1, 2, 3, \ldots$.

This random variable may be finite or infinite.

1.12. Hitting probabilities

Definition 1.8. For $i, j \in S$, define

$$f_{ij} = \mathbb{P}_i(N(j) \geq 1).$$

This is the probability that starting from i, the chain hits j at least once at some future time.

In particular,

$$f_{ii}$$

is the probability of ever returning to i after time 0.

Definition 1.9 (Recurrence and transience)**.** A state i is called

- **recurrent** if $f_{ii} = 1$;
- **transient** if $f_{ii} < 1$.

So:

- recurrent means that if we start at i, then we return to i eventually with probability 1;
- transient means there is a positive probability that after leaving i, we never come back.

1.13. A first geometric law

A key fact from the lecture is that repeated returns behave geometrically.

Proposition 1.10. *For every state $i \in S$ and every integer $k \geq 1$,*

$$\mathbb{P}_i(N(i) \geq k) = f_{ii}^k.$$

Idea. For $k = 1$, this is exactly the definition of f_{ii}.

Now suppose the chain has already returned to i $k-1$ times. Once it is back at i, the future evolution starts afresh from i. Therefore the probability of one more return is again f_{ii}.

By repeating this argument,

$$\mathbb{P}_i(N(i) \geq k) = f_{ii} \cdot f_{ii} \cdots f_{ii} = f_{ii}^k.$$

The rigorous justification uses the strong Markov property at successive hitting times of i. $\square$

Formal proof

Let

$$\tau_1 := \inf\{n \geq 1 : X_n = i\},$$

and for each $m \geq 2$, define recursively

$$\tau_m := \inf\{n > \tau_{m-1} : X_n = i\}.$$

As usual, we adopt the convention $\inf \varnothing = \infty$.

Then τ_m is the time of the m-th return to the state i. Hence

$$\{N(i) \geq k\} = \{\tau_k < \infty\}.$$

Therefore it is enough to prove that

$$P_i(\tau_k < \infty) = f_{ii}^k, \qquad k \geq 1.$$

By definition of the return probability,

$$f_{ii} = P_i(\tau_1 < \infty).$$

We now prove by induction on k that

$$P_i(\tau_k < \infty) = f_{ii}^k.$$

For $k = 1$, this is immediate from the definition:

$$P_i(\tau_1 < \infty) = f_{ii}.$$

Now suppose $k \geq 2$, and assume that $P_i(\tau_{k-1} < \infty) = f_{ii}^{k-1}$. We show that

$$P_i(\tau_k < \infty) = f_{ii}\, P_i(\tau_{k-1} < \infty).$$

On the event $\{\tau_{k-1} < \infty\}$, we have $X_{\tau_{k-1}} = i$. After time τ_{k-1}, define

$$\sigma := \inf\{m \geq 1 : X_{\tau_{k-1}+m} = i\}.$$

Then on $\{\tau_{k-1} < \infty\}$, the event $\{\tau_k < \infty\}$ is exactly the event $\{\sigma < \infty\}$. Thus

$$P_i(\tau_k < \infty) = E_i\left[\mathbf{1}_{\{\tau_{k-1}<\infty\}}\mathbf{1}_{\{\sigma<\infty\}}\right].$$

Now condition on $\mathcal{F}_{\tau_{k-1}}$. Since τ_{k-1} is a stopping time, the strong Markov property implies that on the event $\{\tau_{k-1} < \infty\}$,

$$P_i(\sigma < \infty \mid \mathcal{F}_{\tau_{k-1}}) = P_{X_{\tau_{k-1}}}(\tau_1 < \infty).$$

But $X_{\tau_{k-1}} = i$ on $\{\tau_{k-1} < \infty\}$, so

$$P_i(\sigma < \infty \mid \mathcal{F}_{\tau_{k-1}}) = P_i(\tau_1 < \infty) = f_{ii}.$$

Therefore,

$$\begin{aligned} P_i(\tau_k < \infty) &= E_i\big[\mathbf{1}_{\{\tau_{k-1}<\infty\}} E_i\big[\mathbf{1}_{\{\sigma<\infty\}} \mid \mathcal{F}_{\tau_{k-1}}\big]\big] \\ &= E_i\big[\mathbf{1}_{\{\tau_{k-1}<\infty\}} P_i(\sigma < \infty \mid \mathcal{F}_{\tau_{k-1}})\big] \\ &= E_i\big[\mathbf{1}_{\{\tau_{k-1}<\infty\}}\, f_{ii}\big] \\ &= f_{ii}\, P_i(\tau_{k-1} < \infty). \end{aligned}$$

Using the induction hypothesis,

$$P_i(\tau_k < \infty) = f_{ii}\, f_{ii}^{k-1} = f_{ii}^k.$$

Thus for every integer $k \geq 1$,

$$P_i(N(i) \geq k) = P_i(\tau_k < \infty) = f_{ii}^k.$$

This completes the proof.

This already explains the recurrence/transience dichotomy:

- if $f_{ii} = 1$, then
$$\mathbb{P}_i(N(i) \geq k) = 1 \quad \text{for every } k,$$
so the chain returns to i infinitely many times almost surely;
- if $f_{ii} < 1$, then the tail probabilities decay geometrically.

1.14. Strong Markov viewpoint

Let

$$\tau_i = \inf\{t \geq 1 : X_t = i\}$$

be the first return/hitting time of state i after time 0.

More generally, if we are interested in the first time the chain hits a state j, we use

$$\tau_j = \inf\{t \geq 0 : X_t = j\}.$$

The strong Markov principle says that once the chain hits a state, the future from that time onward behaves like a fresh Markov chain started from that state.

Informally,

$$(X_{\tau_i}, X_{\tau_i+1}, X_{\tau_i+2}, \dots)$$

has the same law as a new chain started from i, on the event $\{\tau_i < \infty\}$.

This is the key reason the geometric formulas above work.

1.15. Generalization to different starting and target states

Now fix $i, j \in S$. Starting from i, the chain must first hit j once, and after that, each additional visit to j behaves like a fresh chain started from j.

Therefore for every $k \geq 1$,

$$\mathbb{P}_i(N(j) \geq k) = f_{ij}\, f_{jj}^{k-1}.$$

Indeed:

- f_{ij} is the probability of hitting j at least once;
- after the first visit to j, the probability of getting at least $k-1$ more visits is f_{jj}^{k-1}.

For $k \geq 1$,

$$\mathbb{P}_i(N(j) \geq k) = f_{ij}\, f_{jj}^{k-1}.$$

This is one of the most useful formulas in Lecture 1.

1.16. Consequences for the distribution of $N(i)$

Take $j = i$. If $f_{ii} < 1$, then

$$\mathbb{P}_i(N(i) \geq k) = f_{ii}^k, \qquad k \geq 0,$$

where the $k = 0$ case is trivial.

Hence

$$\mathbb{P}_i(N(i) = k) = \mathbb{P}_i(N(i) \geq k) - \mathbb{P}_i(N(i) \geq k+1) = f_{ii}^k - f_{ii}^{k+1}, \qquad k = 0, 1, 2, \ldots$$

which is a geometric distribution.

So:

- if $f_{ii} = 1$, then
$$N(i) = \infty \qquad \text{almost surely under } \mathbb{P}_i;$$
- if $f_{ii} < 1$, then
$$\mathbb{P}_i(N(i) = k) = f_{ii}^k(1 - f_{ii}), \qquad k = 0, 1, 2, \ldots$$
and $N(i)$ is geometric.

1.17. Geometric random variable

We now explain why the random variable $N(i)$ has a geometric distribution when $f_{ii} < 1$.

Recall that if $f_{ii} < 1$, then for every integer $k \geq 0$,

$$P_i\big(N(i) \geq k\big) = f_{ii}^k.$$

Therefore,

$$P_i\big(N(i)=k\big) = P_i\big(N(i)\ge k\big) - P_i\big(N(i)\ge k+1\big) = f_{ii}^k - f_{ii}^{k+1} = f_{ii}^k(1-f_{ii}), \qquad k=0,1,2,\dots$$

This is exactly the probability mass function of a geometric random variable on $\{0,1,2,\dots\}$ with parameter

$$p = 1 - f_{ii}.$$

Definition. A random variable X is said to have a geometric distribution with parameter $p \in (0,1]$ on $\{0,1,2,\dots\}$ if

$$P(X=k) = (1-p)^k p, \qquad k=0,1,2,\dots$$

In our case, taking

$$p = 1 - f_{ii},$$

we get

$$P_i\big(N(i)=k\big) = f_{ii}^k(1-f_{ii}) = (1-p)^k p,$$

so $N(i)$ is geometric.

Probability mass function (pmf). If $X \sim \mathrm{Geom}(p)$ on $\{0,1,2,\dots\}$, then

$$P(X=k) = (1-p)^k p, \qquad k=0,1,2,\dots$$

Tail probabilities. For $k \ge 0$,

$$P(X\ge k) = \sum_{m=k}^{\infty}(1-p)^m p = (1-p)^k.$$

This is exactly the form we found above:

$$P_i\big(N(i)\ge k\big) = f_{ii}^k.$$

So here the role of $1-p$ is played by f_{ii}.

Cumulative distribution function (cdf). For $k=0,1,2,\dots$,

$$P(X\le k) = 1 - P(X\ge k+1) = 1-(1-p)^{k+1}.$$

Expectation. If $X \sim \mathrm{Geom}(p)$ on $\{0,1,2,\dots\}$, then

$$E[X] = \frac{1-p}{p}.$$

Hence for $N(i)$,

$$E_i[N(i)] = \frac{f_{ii}}{1-f_{ii}}, \qquad \text{when } f_{ii} < 1.$$

Variance. If $X \sim \mathrm{Geom}(p)$ on $\{0, 1, 2, \dots\}$, then

$$\mathrm{Var}(X) = \frac{1-p}{p^2}.$$

Thus for $N(i)$,

$$\mathrm{Var}_i(N(i)) = \frac{f_{ii}}{(1-f_{ii})^2}, \qquad \text{when } f_{ii} < 1.$$

Memoryless property. A geometric random variable is memoryless:

$$P(X \geq m+n \mid X \geq m) = P(X \geq n), \qquad m, n \geq 0.$$

Indeed,

$$P(X \geq m+n \mid X \geq m) = \frac{P(X \geq m+n)}{P(X \geq m)} = \frac{(1-p)^{m+n}}{(1-p)^m} = (1-p)^n = P(X \geq n).$$

This matches the Markov chain interpretation: once the chain returns to i, the future starts afresh, so the chance of making further returns is the same as before.

Conclusion for $N(i)$. Therefore:

- If $f_{ii} = 1$, then
$$P_i\big(N(i) \geq k\big) = 1 \quad \text{for every } k,$$
so
$$N(i) = \infty \quad \text{almost surely under } P_i.$$
- If $f_{ii} < 1$, then
$$P_i\big(N(i) = k\big) = f_{ii}^k(1-f_{ii}), \qquad k = 0, 1, 2, \dots,$$
so $N(i)$ is geometric on $\{0, 1, 2, \dots\}$ with parameter $1 - f_{ii}$.

1.18. Expected number of visits

Using the tail-sum formula,

$$\mathbb{E}_i[N(j)] = \sum_{k=1}^{\infty} \mathbb{P}_i(N(j) \geq k).$$

Substituting the formula above gives:

$$\mathbb{E}_i[N(j)] = \sum_{k=1}^{\infty} f_{ij} f_{jj}^{k-1}.$$

Therefore

$$\mathbb{E}_i[N(j)] = \begin{cases} \dfrac{f_{ij}}{1-f_{jj}}, & f_{jj} < 1, \\ +\infty, & f_{jj} = 1 \text{ and } f_{ij} > 0, \\ 0, & f_{ij} = 0. \end{cases}$$

In particular,

$$\mathbb{E}_i[N(i)] = \begin{cases} \dfrac{f_{ii}}{1-f_{ii}}, & f_{ii} < 1, \\ +\infty, & f_{ii} = 1. \end{cases}$$

So recurrence is equivalent to having infinitely many expected returns.

1.19. Recurrence state theorem

The transition probabilities themselves can be used to detect recurrence.

Theorem 1.11 (Recurrence state theorem)**.** *A state i is recurrent if and only if*

$$\sum_{n=1}^{\infty} p_{ii}^{(n)} = +\infty.$$

Equivalently, i is transient if and only if

$$\sum_{n=1}^{\infty} p_{ii}^{(n)} < \infty.$$

Proof. By definition,

$$N(i) = \sum_{n=1}^{\infty} \mathbf{1}_{\{X_n = i\}}.$$

Taking expectation under $\mathbb{P}_i$,

$$\mathbb{E}_i[N(i)] = \sum_{n=1}^{\infty} \mathbb{E}_i[\mathbf{1}_{\{X_n=i\}}] = \sum_{n=1}^{\infty} \mathbb{P}_i(X_n = i) = \sum_{n=1}^{\infty} p_{ii}^{(n)}.$$

On the other hand, from the previous subsection,

$$\mathbb{E}_i[N(i)] = \begin{cases} \dfrac{f_{ii}}{1-f_{ii}}, & f_{ii} < 1, \\ +\infty, & f_{ii} = 1. \end{cases}$$

Thus

$$\sum_{n=1}^{\infty} p_{ii}^{(n)} = +\infty \quad \Longleftrightarrow \quad f_{ii} = 1,$$

which is exactly the statement that i is recurrent. $\square$

A state i is recurrent exactly when

$$\sum_{n=1}^{\infty} p_{ii}^{(n)} = \infty.$$

So recurrence can be tested by looking at the return probabilities $p_{ii}^{(n)}$.

1.20. Example: simple random walk on $\mathbb{Z}$

Consider the simple random walk on the integers:

$$S = \mathbb{Z}, \qquad p_{i,i+1} = p_{i,i-1} = \frac{1}{2}, \qquad i \in \mathbb{Z}.$$

We ask whether state 0 is recurrent.

By symmetry and translation invariance, it is enough to study returns to 0.

First, if n is odd, then

$$p_{00}^{(n)} = 0,$$

because after an odd number of steps the walk cannot be back at the origin.

Now let $n = 2m$. To return to 0 after $2m$ steps, the walk must make exactly m upward steps and m downward steps. Hence

$$p_{00}^{(2m)} = \binom{2m}{m} \left(\frac{1}{2}\right)^{2m}.$$

Using Stirling's formula,

$$m! \sim \sqrt{2\pi m} \left(\frac{m}{e}\right)^m,$$

one obtains the classical asymptotic

$$\binom{2m}{m} \sim \frac{4^m}{\sqrt{\pi m}}.$$

Therefore

$$p_{00}^{(2m)} = \binom{2m}{m} 2^{-2m} \sim \frac{1}{\sqrt{\pi m}}.$$

Since

$$\sum_{m=1}^{\infty} \frac{1}{\sqrt{m}} = +\infty,$$

it follows that

$$\sum_{n=1}^{\infty} p_{00}^{(n)} = \sum_{m=1}^{\infty} p_{00}^{(2m)} = +\infty.$$

By the recurrence state theorem, state 0 is recurrent.

Because the simple random walk on $\mathbb{Z}$ is irreducible, every state communicates with 0. Hence every

state is recurrent.

For simple random walk on $\mathbb{Z}$,

$$p_{00}^{(2m)} = \binom{2m}{m} 2^{-2m} \sim \frac{1}{\sqrt{\pi m}}, \qquad p_{00}^{(2m+1)} = 0.$$

Since the series of return probabilities diverges, the walk is recurrent.

1.21. Summary of Lecture 1

Lecture 1 introduces discrete-time Markov chains and the first long-run questions.
Main points:

- A Markov chain is determined by a state space S, an initial distribution ν, and a transition matrix P.
- The Markov property says the next step depends only on the current state.
- Important examples include the frog on a circle, coin tossing, and Ehrenfest's urn.
- The probability of a path factors as
$$\nu_{i_0} p_{i_0 i_1} \cdots p_{i_{n-1} i_n}.$$
- The n-step transition probabilities are given by matrix powers:
$$p_{ij}^{(n)} = [P^n]_{ij}.$$
- Chapman–Kolmogorov:
$$p_{ij}^{(m+n)} = \sum_{k \in S} p_{ik}^{(m)} p_{kj}^{(n)}.$$
- The total number of future visits to a state is
$$N(j) = \sum_{t=1}^{\infty} \mathbf{1}_{\{X_t = j\}}.$$
- The hitting probabilities
$$f_{ij} = \mathbb{P}_i(N(j) \geq 1)$$
lead to the definitions of recurrence and transience.
- A state i is recurrent iff
$$\sum_{n=1}^{\infty} p_{ii}^{(n)} = \infty.$$
- Simple random walk on $\mathbb{Z}$ is recurrent.

2. Lecture 2

2.1. Recall from Lecture 1: recurrence criterion

From the previous lecture, a state i is recurrent if and only if

$$\sum_{n=1}^{\infty} p_{ii}^{(n)} = +\infty.$$

So recurrence can be detected by looking at the total mass of the return probabilities.

2.2. A detour: the Borel–Cantelli lemma

The lecture briefly recalls a general probabilistic fact.

Lemma 2.1 (Borel–Cantelli)**.** *Let $(E_n)_{n\geq 1}$ be a sequence of events. If*

$$\sum_{n=1}^{\infty} \mathbb{P}(E_n) < \infty,$$

then only finitely many of the events E_n occur, almost surely.

Idea. We have

$$\sum_{n=1}^{\infty} \mathbb{P}(E_n) = \mathbb{E}\left[\sum_{n=1}^{\infty} \mathbf{1}_{E_n}\right].$$

But $\sum_{n=1}^{\infty} \mathbf{1}_{E_n}$ is exactly the number of events among (E_n) that occur. So if the expectation is finite, this random variable cannot be $+\infty$ with positive probability. Hence only finitely many E_n occur almost surely. □

A natural choice in the Markov-chain setting is

$$E_n = \{X_n = i\}.$$

Then

$$\sum_{n=1}^{\infty} \mathbb{P}_i(E_n) = \sum_{n=1}^{\infty} p_{ii}^{(n)}.$$

So if $\sum_{n\geq 1} p_{ii}^{(n)} < \infty$, then the chain visits i only finitely many times almost surely.

However, the backward implication is *not* true in general for arbitrary events: "only finitely many occurrences a.s." does not by itself imply $\sum_n \mathbb{P}(E_n) < \infty$.

The important point is that for Markov chains, the number of returns in the transient case has a geometric structure, so one does recover the backward implication there.

2.3. Simple random walk in one dimension

For one-dimensional simple random walk, the return probability satisfies

$$p_{00}^{(n)} \sim \frac{1}{\sqrt{n}}.$$

Hence

$$\sum_{n=1}^{\infty} p_{00}^{(n)} = +\infty.$$

Therefore the origin is recurrent, and by irreducibility all states are recurrent.

2.4. A higher-dimensional walk built from independent coordinates

The lecture then considers a d-dimensional walk

$$X_n = (X_n^{(1)}, X_n^{(2)}, \ldots, X_n^{(d)}),$$

where each coordinate is an independent one-dimensional simple random walk.

Equivalently, from $i = (i_1, \ldots, i_d)$ the chain moves to

$$j = (j_1, \ldots, j_d)$$

with probability

$$p_{ij} = \begin{cases} 2^{-d}, & \text{if } |i_k - j_k| = 1 \text{ for every } k = 1, \ldots, d, \\ 0, & \text{otherwise.} \end{cases}$$

So every coordinate moves by ± 1 at each step, independently of the others.

Since the coordinates are independent,

$$p_{00}^{(n)} = \prod_{r=1}^{d} \mathbb{P}(X_n^{(r)} = 0) = \left(2^{-n}\binom{n}{n/2}\right)^d \sim n^{-d/2}.$$

Therefore

$$\sum_{n=1}^{\infty} p_{00}^{(n)} \begin{cases} = +\infty, & d = 1, 2, \\ < \infty, & d \geq 3. \end{cases}$$

So this walk is:

- recurrent in dimensions 1 and 2,
- transient in dimensions $d \geq 3$.

For the product-type d-dimensional walk,

$$p_{00}^{(n)} \sim n^{-d/2}.$$

Hence recurrence occurs for $d = 1, 2$, while transience occurs for $d \geq 3$.

This is the origin of the slogan:

> A drunk man gets home, while a drunk bird may not.

2.5. Hitting probabilities

We now introduce one of the main objects of Lecture 2.

Definition 2.2 (Hitting probability)**.** For states $i, j \in S$, define

$$f_{ij} = \mathbb{P}_i(\text{ever visit } j).$$

Equivalently, f_{ij} is the probability that starting from i, the chain hits j at least once at a positive time.

In particular, f_{ii} is the return probability to i.

2.6. A small example: computing some f_{ij}

The lecture gives a small finite-state example to show how to compute f_{ij} directly.

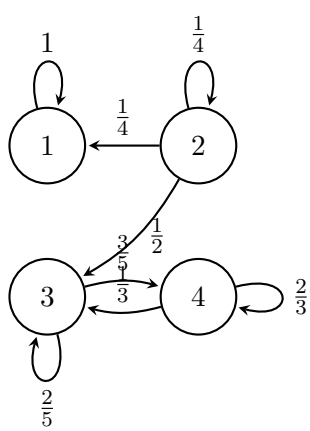

From the diagram:

- state 1 is absorbing;
- from state 2, the chain goes to 1 with probability 1/4, stays at 2 with probability 1/4, and goes to 3 with probability 1/2;

- from state 3, it stays at 3 with probability 2/5 and goes to 4 with probability 3/5;
- from state 4, it goes to 3 with probability 1/3 and stays at 4 with probability 2/3.

From this:

$$f_{11} = 1, \qquad f_{1j} = 0 \quad (j = 2, 3, 4),$$

because once the chain is at 1, it never leaves.

Also,

$$f_{22} = \frac{1}{4},$$

since after starting from 2, the only way to return to 2 is to use the self-loop immediately.

Next,

$$f_{21} = \frac{1}{4} + \frac{1}{4} \cdot \frac{1}{4} + \left(\frac{1}{4}\right)^2 \frac{1}{4} + \cdots = \frac{\frac{1}{4}}{1 - \frac{1}{4}} = \frac{1}{3}.$$

Similarly,

$$f_{23} = \frac{1}{2} + \frac{1}{4} \cdot \frac{1}{2} + \left(\frac{1}{4}\right)^2 \frac{1}{2} + \cdots = \frac{\frac{1}{2}}{1 - \frac{1}{4}} = \frac{2}{3}.$$

This illustrates the general idea that hitting probabilities can often be found either by:

- direct first-step analysis, or
- solving a linear system.

2.7. First-step expansion for f_{ij}

Condition on the first step X_1. Then

$$f_{ij} = \sum_{k \in S} \mathbb{P}_i(X_1 = k)\, \mathbb{P}_k(\text{ever visit } j).$$

But this expression must be handled carefully when $k = j$. If $X_1 = j$, the event "ever visit j" has already happened, so the contribution is simply p_{ij}, not $p_{ij} f_{jj}$.

Therefore the correct first-step expansion is

$$f_{ij} = p_{ij} + \sum_{k \in S,\, k \neq j} p_{ik} f_{kj}.$$

The hitting probabilities satisfy the first-step equations

$$f_{ij} = p_{ij} + \sum_{k \in S,\, k \neq j} p_{ik} f_{kj}.$$

So in principle one gets $|S|^2$ linear equations for the $|S|^2$ unknowns f_{ij}.

2.8. Example: gambler's ruin

Consider the classical gambler's ruin chain.

A gambler starts with initial wealth

$$X_0 = a, \qquad a \in \mathbb{N}.$$

At each round:

- the gambler wins \$1 with probability 1/2,
- the gambler loses \$1 with probability 1/2.

The game stops when the wealth reaches either 0 or c, where $c > a$.

So the state space is

$$S = \{0, 1, 2, \ldots, c\},$$

with 0 and c absorbing.

We are interested in

$$\mathbb{P}_a(\text{ever visit } c) = f_{ac}.$$

Since 0 and c are absorbing,

$$f_{00} = 1, \qquad f_{cc} = 1.$$

For $i \in \{1, 2, \ldots, c-1\}$, the state i is transient in this finite stopped chain, so $f_{ii} < 1$.

2.9. Gambler's ruin when $p = 1/2$

For $1 \le i \le c-1$, the first-step expansion gives

$$f_{ic} = \frac{1}{2} f_{(i+1)c} + \frac{1}{2} f_{(i-1)c}.$$

Equivalently,

$$f_{(i+1)c} - f_{ic} = f_{ic} - f_{(i-1)c}.$$

So the differences are constant:

$$f_{ic} - f_{(i-1)c} = \text{constant}.$$

Now telescope:

$$1 = f_{cc} - f_{0c} = \sum_{i=1}^{c} \big(f_{ic} - f_{(i-1)c}\big) = c\big(f_{1c} - f_{0c}\big).$$

Hence

$$f_{ic} - f_{(i-1)c} = \frac{1}{c}.$$

Therefore

$$f_{ac} = a \cdot \frac{1}{c} = \frac{a}{c}.$$

Theorem 2.3 (Gambler's ruin, fair case)**.** *If the gambler wins and loses each with probability* $1/2$*, then*

$$\mathbb{P}_a(\textit{hit } c \textit{ before } 0) = \frac{a}{c}.$$

2.10. Gambler's ruin when $p \neq 1/2$

Now suppose

$$p_{i,i+1} = p, \qquad p_{i,i-1} = 1-p, \qquad 1 \le i \le c-1,$$

with $p \neq 1/2$.

Then

$$f_{ic} = p\, f_{(i+1)c} + (1-p) f_{(i-1)c}.$$

Rearranging,

$$f_{(i+1)c} - f_{ic} = \frac{1-p}{p}\big(f_{ic} - f_{(i-1)c}\big).$$

So the increments form a geometric sequence:

$$f_{(i+1)c} - f_{ic} = \left(\frac{1-p}{p}\right)^i (f_{1c} - f_{0c}).$$

Summing from $i = 0$ to $c-1$,

$$1 = f_{cc} - f_{0c} = \sum_{i=0}^{c-1} (f_{(i+1)c} - f_{ic}) = (f_{1c} - f_{0c}) \sum_{i=0}^{c-1} \left(\frac{1-p}{p}\right)^i.$$

This gives

$$f_{ac} = \frac{\left(\frac{1-p}{p}\right)^a - 1}{\left(\frac{1-p}{p}\right)^c - 1}.$$

Theorem 2.4 (Gambler's ruin, biased case)**.** *If* $p \neq 1/2$*, then*

$$\mathbb{P}_a(\textit{hit } c \textit{ before } 0) = \frac{\left(\frac{1-p}{p}\right)^a - 1}{\left(\frac{1-p}{p}\right)^c - 1}.$$

2.11. Communication and irreducibility

Definition 2.5 (Communication)**.** We say that i *communicates with* j, written

$$i \to j,$$

if

$$f_{ij} > 0.$$

If both $i \to j$ and $j \to i$, we write

$$i \leftrightarrow j.$$

Definition 2.6 (Irreducible Markov chain)**.** A Markov chain is called *irreducible* if for every $i, j \in S$,

$$i \leftrightarrow j.$$

Examples:

- one-dimensional simple random walk is irreducible;
- the product-type higher-dimensional walk above is not necessarily irreducible, because parity-type obstructions may appear;
- if instead one chooses a random coordinate and moves only that coordinate by ± 1 at each step, then the resulting walk on $\mathbb{Z}^d$ is irreducible;
- gambler's ruin is reducible because the absorbing states 0 and c cannot reach the interior states.

2.12. Recurrence is a class property

A key fact is that recurrence is shared across communicating states.

Proposition 2.7 (Simultaneous recurrence)**.** *If*

$$i \leftrightarrow j$$

and i is recurrent, then j is also recurrent.

So within one communicating class, either every state is recurrent or every state is transient.

Corollary 2.8 (Case theorem)**.** If a Markov chain is irreducible, then exactly one of the following holds:

(i) all states are recurrent;

(ii) all states are transient.

Thus for an irreducible chain it makes sense to speak of a *recurrent chain* or a *transient chain*.

2.13. The sum lemma

The proof of simultaneous recurrence is based on the following comparison lemma.

Lemma 2.9 (Sum lemma)**.** *Suppose*

$$i \to k \qquad \textit{and} \qquad \ell \to j.$$

If

$$\sum_{n=1}^{\infty} p_{k\ell}^{(n)} = +\infty,$$

then

$$\sum_{n=1}^{\infty} p_{ij}^{(n)} = +\infty.$$

Proof. Since $i \to k$, there exists $m > 0$ such that

$$p_{ik}^{(m)} > 0.$$

Similarly, since $\ell \to j$, there exists $r > 0$ such that

$$p_{\ell j}^{(r)} > 0.$$

For $n > m + r$, the Chapman–Kolmogorov inequality gives

$$p_{ij}^{(n)} \geq p_{ik}^{(m)}\, p_{k\ell}^{(n-m-r)}\, p_{\ell j}^{(r)}.$$

Therefore

$$\sum_{n=1}^{\infty} p_{ij}^{(n)} \geq p_{ik}^{(m)} p_{\ell j}^{(r)} \sum_{t=1}^{\infty} p_{k\ell}^{(t)}.$$

The right-hand side is $+\infty$, so

$$\sum_{n=1}^{\infty} p_{ij}^{(n)} = +\infty.$$

□

2.14. Proof that recurrence is shared inside a communicating class

Take $i \leftrightarrow k$. If k is recurrent, then

$$\sum_{n=1}^{\infty} p_{kk}^{(n)} = +\infty.$$

Apply the sum lemma with

$$k = \ell, \qquad j = i.$$

Since $i \to k$ and $k \to i$, we get

$$\sum_{n=1}^{\infty} p_{ii}^{(n)} = +\infty.$$

Hence i is recurrent.

So communicating states are recurrent or transient together.

2.15. What about $\sum_n p_{ij}^{(n)}$

For an irreducible chain, not only $\sum_n p_{ii}^{(n)}$ but also the mixed sums $\sum_n p_{ij}^{(n)}$ have a clean dichotomy.

Proposition 2.10. *Suppose the chain is irreducible.*

(i) If the chain is recurrent, then for all $i, j \in S$,

$$\sum_{n=1}^{\infty} p_{ij}^{(n)} = +\infty.$$

(ii) If the chain is transient, then for all $i, j \in S$,

$$\sum_{n=1}^{\infty} p_{ij}^{(n)} < \infty.$$

Proof. First observe that

$$\sum_{n=1}^{\infty} p_{ij}^{(n)} = \mathbb{E}_i\big[\# \text{ visits to } j\big].$$

If the chain is recurrent and irreducible, then j is recurrent and $i \to j$. Choose m such that $p_{ij}^{(m)} > 0$. Then

$$\mathbb{E}_i[\# \text{ visits to } j] \geq p_{ij}^{(m)}\, \mathbb{E}_j[\# \text{ returns to } j] = +\infty.$$

If the chain is transient, then once the chain hits j, the number of future returns to j has geometric behavior with parameter $1 - f_{jj} > 0$. Hence

$$\mathbb{E}_i[\# \text{ visits to } j] = \frac{f_{ij}}{1 - f_{jj}} < \infty.$$

Therefore

$$\sum_{n=1}^{\infty} p_{ij}^{(n)} < \infty.$$

□

For an irreducible chain:

$$\text{recurrent} \iff \sum_{n=1}^{\infty} p_{ij}^{(n)} = +\infty \quad (\forall i, j \in S),$$

while

$$\text{transient} \iff \sum_{n=1}^{\infty} p_{ij}^{(n)} < \infty \quad (\forall i, j \in S).$$

2.16. Finite irreducible chains are recurrent

A very important special case is the finite-state case.

Theorem 2.11. *If the chain is irreducible and $|S| < \infty$, then it is recurrent.*

Proof. Fix $i \in S$. Then

$$\sum_{j\in S}\sum_{n=1}^{\infty} p_{ij}^{(n)} = \sum_{n=1}^{\infty}\sum_{j\in S} p_{ij}^{(n)} = \sum_{n=1}^{\infty} 1 = +\infty.$$

Since S is finite, at least one state $j \in S$ must satisfy

$$\sum_{n=1}^{\infty} p_{ij}^{(n)} = +\infty.$$

By the previous proposition, this forces the irreducible chain to be recurrent. □

2.17. Goal: a criterion in terms of f_{ij}

We now want a necessary and sufficient condition for an irreducible chain to be recurrent, expressed directly through the hitting probabilities f_{ij}.

The key statement is the following.

Lemma 2.12 (f-lemma)**.** *If*

$$j \to i \qquad \text{and} \qquad f_{jj} = 1,$$

then

$$f_{ij} = 1.$$

So if j is recurrent and i can be reached from j, then starting from i one must eventually hit j with probability 1.

2.18. A technical tool: the hit lemma

Lemma 2.13 (Hit lemma)**.** *Let H_{ij} be the event that starting from j, the chain hits i before returning to j. If*

$$j \to i,$$

then

$$\mathbb{P}_j(H_{ij}) > 0.$$

Idea. If $j \to i$, then there exists a finite path

$$x_0 = j,\ x_1,\ \ldots,\ x_m = i$$

with

$$p_{x_0x_1}p_{x_1x_2}\cdots p_{x_{m-1}x_m} > 0.$$

This path reaches i before coming back to j, so the event H_{ij} has positive probability. □

2.19. Proof of the f-lemma

Proof. Since $j \to i$, the hit lemma gives

$$\mathbb{P}_j(H_{ij}) > 0.$$

Because j is recurrent,

$$\mathbb{P}_j(\text{never return to } j) = 0.$$

Now consider the event:

hit i before returning to j, and then starting from i, never visit j.

By the strong Markov property, this event has probability

$$\mathbb{P}_j(H_{ij}) \cdot \mathbb{P}_i(\text{never visit } j).$$

But this event is contained in the event "never return to j," so

$$0 = \mathbb{P}_j(\text{never return to } j) \geq \mathbb{P}_j(H_{ij}) \cdot \mathbb{P}_i(\text{never visit } j).$$

Since $\mathbb{P}_j(H_{ij}) > 0$, it follows that

$$\mathbb{P}_i(\text{never visit } j) = 0.$$

Therefore

$$f_{ij} = 1.$$

□

2.20. Infinite returns lemma

Define

$$N(j) = \#\{\text{visits to } j\}.$$

For irreducible chains, recurrence and transience can be characterized by whether every state is visited infinitely often or only finitely often.

Lemma 2.14 (Infinite returns lemma)**.** *Suppose the chain is irreducible.*

(i) If the chain is recurrent, then for all $i, j \in S$,

$$\mathbb{P}_i(N(j) = +\infty) = 1.$$

(ii) If the chain is transient, then for all $i, j \in S$,

$$\mathbb{P}_i(N(j) = +\infty) = 0.$$

Proof. If the chain is recurrent, then $f_{jj} = 1$. Since the chain is irreducible, $j \to i$, so by the f-lemma,

$$f_{ij} = 1.$$

For any $k \in \mathbb{N}$,

$$\mathbb{P}_i(N(j) \geq k) = f_{ij}\, f_{jj}^{k-1} = 1.$$

Hence

$$\mathbb{P}_i(N(j) = +\infty) = 1.$$

If the chain is transient, then

$$\mathbb{E}_i[N(j)] = \frac{f_{ij}}{1 - f_{jj}} < \infty.$$

Therefore $N(j) < \infty$ almost surely, so

$$\mathbb{P}_i(N(j) = +\infty) = 0.$$

□

2.21. Recurrence equivalence theorem

We can now collect the main equivalent formulations of recurrence for irreducible chains.

Theorem 2.15 (Recurrence equivalence theorem)**.** *Suppose the Markov chain is irreducible. Then the following are equivalent:*

(i) there exist $k, \ell \in S$ such that

$$\sum_{n=1}^{\infty} p_{k\ell}^{(n)} = +\infty;$$

(ii) for all $k, \ell \in S$,

$$\sum_{n=1}^{\infty} p_{k\ell}^{(n)} = +\infty;$$

(iii) there exists $k \in S$ such that

$$f_{kk} = 1;$$

(iv) for all $k \in S$,

$$f_{kk} = 1;$$

(v) for all $i, j \in S$,

$$f_{ij} = 1;$$

(vi) there exist $k, \ell \in S$ such that

$$\mathbb{P}_k(N(\ell) = +\infty) = 1;$$

(vii) for all $k, \ell \in S$,

$$\mathbb{P}_k(N(\ell) = +\infty) = 1.$$

Why these are equivalent. The implications are assembled from the previous results:

- (i) $\Rightarrow$ (ii): by the sum lemma and irreducibility;
- (ii) $\Rightarrow$ (iii): take $k = \ell$;
- (iii) $\Rightarrow$ (iv): by simultaneous recurrence;
- (iv) $\Rightarrow$ (v): by the f-lemma;
- (v) $\Rightarrow$ (iv): trivial by setting $i = j$;
- (v) $\Rightarrow$ (vii): by the infinite returns lemma;
- (vi) $\Rightarrow$ (vii): by irreducibility and the infinite returns lemma;
- (vii) $\Rightarrow$ (vi): trivial.

Hence all seven statements are equivalent. □

For an irreducible Markov chain, the following all mean the same thing:

- some/all return-probability sums are infinite;
- some/all states have return probability 1;
- all hitting probabilities satisfy $f_{ij} = 1$;
- every state is visited infinitely often almost surely.

These are all equivalent formulations of recurrence.

2.22. Important warning: the existential version of $f_{ij} = 1$ is not enough

The lecture ends with an important counterexample.

Consider the random walk on $\mathbb{Z}$ defined by

$$X_{n+1} = X_n + \varepsilon_{n+1},$$

where

$$\varepsilon_{n+1} = \begin{cases} 1, & \text{with probability } 2/3, \\ -1, & \text{with probability } 1/3. \end{cases}$$

This is a biased random walk with positive drift. It is transient.

However,

$$f_{01} = 1.$$

Indeed, starting from 0, the walk hits 1 with probability 1, even though it does not keep returning indefinitely.

So the statement

$$\exists\, i, j \in S \text{ such that } f_{ij} = 1$$

does *not* imply recurrence.

What is needed is the much stronger condition

$$f_{ij} = 1 \qquad \text{for all } i, j \in S,$$

which, in the irreducible setting, *is* equivalent to recurrence.

2.23. Summary

Lecture 2 develops the theory of recurrence further by introducing hitting probabilities f_{ij}, communication, irreducibility, and the class-property nature of recurrence/transience.
The main points are:

- recurrence is equivalent to
$$\sum_{n=1}^{\infty} p_{ii}^{(n)} = +\infty;$$
- hitting probabilities satisfy the first-step equations
$$f_{ij} = p_{ij} + \sum_{k \neq j} p_{ik} f_{kj};$$
- gambler's ruin can be solved neatly using these equations;
- in an irreducible chain, either all states are recurrent or all are transient;
- finite irreducible chains are automatically recurrent;
- for irreducible chains, recurrence is equivalent to $f_{ij} = 1$ for all i, j, and also equivalent to visiting every state infinitely often almost surely.

3. Lecture 3

3.1. Recall: recurrence and transience in an irreducible chain

Let P be an irreducible Markov chain on a finite or countable state space S.

Recall the standard notation:

$$f_{ij} = \mathbb{P}_i(\tau_j < \infty),$$

where

$$\tau_j = \inf\{n \geq 1 : X_n = j\}$$

is the first hitting/return time of j after time 0.

We also write

$$N(j) = \sum_{n \geq 0} \mathbf{1}_{\{X_n = j\}}$$

for the total number of visits to state j.

As before:

- j is called *recurrent* if
$$f_{jj} = 1;$$
- j is called *transient* if
$$f_{jj} < 1.$$

Because the chain is irreducible, recurrence and transience are class properties. So either all states are recurrent, or all states are transient.

3.2. Equivalent criteria for recurrence

The first part of the lecture collects several equivalent ways to recognize recurrence.

Theorem 3.1 (Recurrence equivalence theorem)**.** *Let P be irreducible. Then the following are equivalent:*

1. *the chain is recurrent;*
2. *for some, equivalently every, $i \in S$,*
$$f_{ii} = 1;$$
3. *for some, equivalently every, $i, j \in S$,*
$$\mathbb{P}_i\big(N(j) = \infty\big) = 1;$$
4. *for some, equivalently every, $i, j \in S$,*
$$\sum_{n=1}^{\infty} p_{ij}^{(n)} = \infty;$$

5. *for every* $i, j \in S$,
$$f_{ij} = 1.$$

So for an irreducible chain, recurrence means much more than just "eventually returning to the starting state." It means every state is hit with probability 1, and every state is visited infinitely often almost surely.

Theorem 3.2 (Transience equivalence theorem)**.** *Let P be irreducible. Then the following are equivalent:*

1. *the chain is transient;*
2. *for some, equivalently every,* $i \in S$,
$$f_{ii} < 1;$$
3. *for some, equivalently every,* $i, j \in S$,
$$\mathbb{P}_i\big(N(j) = \infty\big) = 0;$$
4. *for some, equivalently every,* $i, j \in S$,
$$\sum_{n=1}^{\infty} p_{ij}^{(n)} < \infty;$$
5. *there exist* $i, j \in S$ *such that*
$$f_{ij} < 1.$$

A useful way to think about the transient case is that returns eventually stop. In particular, once a state has a strictly positive probability of never being hit again, repeated attempts force the total number of visits to be finite almost surely.

For an irreducible chain,
$$\text{recurrence} \quad \Longleftrightarrow \quad \mathbb{P}_i\big(N(j) = \infty\big) = 1 \quad \Longleftrightarrow \quad \sum_{n=1}^{\infty} p_{ij}^{(n)} = \infty,$$
for some/every $i, j \in S$.
Likewise,
$$\text{transience} \quad \Longleftrightarrow \quad \mathbb{P}_i\big(N(j) = \infty\big) = 0 \quad \Longleftrightarrow \quad \sum_{n=1}^{\infty} p_{ij}^{(n)} < \infty.$$
However,
$$\exists\, i, j \text{ such that } f_{ij} = 1$$
is *not* by itself an equivalent criterion for recurrence.

3.3. A counterexample: irreducible and transient, but $f_{ij} = 1$ for some pair

The notes explicitly warn that the condition

$$\exists\, i, j \text{ such that } f_{ij} = 1$$

is not enough.

Proposition 3.3. *There exists an irreducible Markov chain which is transient, but for some pair i, j we still have $f_{ij} = 1$.*

Proof. Consider the nearest-neighbor random walk on $\mathbb{Z}$:

$$X_0 = 0, \qquad X_{n+1} = X_n + \varepsilon_{n+1},$$

where

$$\varepsilon_{n+1} = \begin{cases} +1, & \text{with probability } p, \\ -1, & \text{with probability } 1-p, \end{cases} \qquad p > \frac{1}{2}.$$

This chain is irreducible, because by successive ± 1 moves one can go from any integer to any other integer.

To test recurrence, look at the return probabilities to 0. For odd times,

$$p_{00}^{(n)} = 0.$$

For even times $n = 2m$,

$$p_{00}^{(2m)} = \binom{2m}{m} p^m (1-p)^m.$$

Using the central-binomial asymptotic,

$$\binom{2m}{m} \sim \frac{4^m}{\sqrt{\pi m}},$$

we get

$$p_{00}^{(2m)} \sim \frac{(4p(1-p))^m}{\sqrt{\pi m}}.$$

Since $p > \frac{1}{2}$, we have $4p(1-p) < 1$, so

$$\sum_{m=0}^{\infty} p_{00}^{(2m)} < \infty.$$

Therefore the chain is transient.

On the other hand, by the law of large numbers,

$$\frac{X_n}{n} = \frac{1}{n} \sum_{k=1}^{n} \varepsilon_k \longrightarrow \mathbb{E}[\varepsilon_1] = 2p - 1 > 0 \qquad \text{a.s.}$$

Hence

$$X_n \to +\infty \qquad \text{a.s.}$$

Starting from 0, any path that drifts to $+\infty$ must hit 1, so

$$f_{01} = 1.$$

Thus the chain is transient, irreducible, and yet $f_{01} = 1$. □

Remark 3.4. So the correct irreducible recurrence criterion is

$$f_{ij} = 1 \text{ for all } i, j,$$

not merely for one special pair.

3.4. Reducible Markov chains on a finite state space

The lecture then turns to the reducible case.

If the state space is finite and the chain is reducible, we may reorder the states so that the recurrent classes come first and the transient states come last. Then P can be written in block form as

$$P = \begin{pmatrix} \widetilde{P} & 0 \\ S & Q \end{pmatrix},$$

where:

- $\widetilde{P}$ contains the recurrent classes;
- Q is the transient block;
- S describes transitions from transient states into recurrent classes.

More precisely, $\widetilde{P}$ can be further decomposed as a block diagonal matrix

$$\widetilde{P} = \begin{pmatrix} P_1 & 0 & \cdots & 0 \\ 0 & P_2 & \cdots & 0 \\ \vdots & \vdots & \ddots & \vdots \\ 0 & 0 & \cdots & P_r \end{pmatrix},$$

where each P_k is an irreducible recurrent class.

A useful fact is:

Proposition 3.5. *If i is transient and j is recurrent, then $j \nrightarrow i$.*

Intuitively, once the chain enters a recurrent class, it cannot later escape into a transient part.

Raising the block matrix to the n-th power gives

$$P^n = \begin{pmatrix} \widetilde{P}^n & 0 \\ S_n & Q^n \end{pmatrix}.$$

Because the states in the Q-block are transient, one has

$$Q^n \to 0 \qquad \text{as } n \to \infty.$$

So eventually the mass in the transient block disappears, and the chain ends up in one of the recurrent classes. In concrete examples, the entries of S_n can be used to compute the probability that a transient starting point eventually lands in a given recurrent class.

3.5. The main long-run question

The lecture next asks the natural convergence question:

$$\lim_{n\to\infty} \mathbb{P}_i(X_n = j) = \lim_{n\to\infty} p_{ij}^{(n)}.$$

Suppose for a moment that for each fixed j,

$$p_{ij}^{(n)} \longrightarrow q_j.$$

Then also

$$p_{ij}^{(n+1)} \longrightarrow q_j.$$

But by Chapman–Kolmogorov,

$$p_{ij}^{(n+1)} = \sum_{k\in S} p_{ik}^{(n)} p_{kj}.$$

Passing formally to the limit suggests

$$q_j = \sum_{k\in S} q_k p_{kj}.$$

In vector form,

$$q = qP.$$

So any candidate limit must be stationary.

3.6. Stationary distributions and stationary measures

Definition 3.6 (Stationary distribution)**.** A probability distribution $\pi = (\pi_i)_{i\in S}$ is called *stationary* for P if

$$\pi = \pi P, \qquad \sum_{i\in S} \pi_i = 1.$$

Here π is viewed as a row vector.

The notes also point out that in infinite state spaces one may have a nonnegative solution of

$$\pi = \pi P$$

with

$$\sum_{i \in S} \pi_i = +\infty.$$

Such an object is called a *stationary measure*, but not a stationary distribution.

3.7. Example: the frog walk on 20 states

Recall the frog walk on the circle with 20 states. From each state i,

- the chain moves to $i - 1 \pmod{20}$ with probability $1/3$,
- stays at i with probability $1/3$,
- moves to $i + 1 \pmod{20}$ with probability $1/3$.

Guess the uniform distribution:

$$\pi = \left[\frac{1}{20}, \frac{1}{20}, \ldots, \frac{1}{20}\right].$$

For each state i, there are exactly three states that can jump into i, and each contributes probability $1/3$. Hence

$$\sum_{j \in S} \pi_j p_{ji} = \frac{1}{20} \cdot \frac{1}{3} \cdot 3 = \frac{1}{20} = \pi_i.$$

So the uniform distribution is stationary.

3.8. Doubly stochastic matrices

Definition 3.7 (Doubly stochastic)**.** A transition matrix P on a finite state space is called *doubly stochastic* if, in addition to

$$\sum_{j \in S} p_{ij} = 1 \qquad (\forall i \in S),$$

we also have

$$\sum_{i \in S} p_{ij} = 1 \qquad (\forall j \in S).$$

The first condition says each row is a probability distribution. The second says each column also sums to 1.

Proposition 3.8. *If P is doubly stochastic on a finite state space S, then the uniform distribution*

$$\pi = \left[\frac{1}{|S|}, \frac{1}{|S|}, \ldots, \frac{1}{|S|}\right]$$

is stationary.

Proof. For each $i \in S$,

$$\sum_{j \in S} \pi_j p_{ji} = \sum_{j \in S} \frac{1}{|S|} p_{ji} = \frac{1}{|S|} \sum_{j \in S} p_{ji} = \frac{1}{|S|} = \pi_i.$$

□

In fact, on a finite state space the converse is also true: the uniform distribution is stationary if and only if the matrix is doubly stochastic.

3.9. Reversibility and detailed balance

A very useful sufficient condition for stationarity is the detailed balance identity.

Definition 3.9 (Reversibility / detailed balance)**.** Let π be a probability distribution on S. We say that P is *reversible with respect to* π if

$$\pi_i p_{ij} = \pi_j p_{ji} \qquad \text{for all } i, j \in S.$$

Proposition 3.10. *If P is reversible with respect to π, then π is a stationary distribution for P.*

Proof. Fix $j \in S$. Then

$$\sum_{i \in S} \pi_i p_{ij} = \sum_{i \in S} \pi_j p_{ji} = \pi_j \sum_{i \in S} p_{ji}.$$

A cleaner way to write the same computation is to use detailed balance term by term:

$$\sum_{i \in S} \pi_i p_{ij} = \sum_{i \in S} \pi_j p_{ji} = \pi_j \sum_{i \in S} p_{ji} = \pi_j.$$

Thus $\pi = \pi P$. □

Detailed balance

$$\pi_i p_{ij} = \pi_j p_{ji} \qquad (\forall i, j)$$

implies stationarity:

$$\pi = \pi P.$$

So reversibility is a powerful way to *guess and verify* a stationary distribution.

3.10. Example: the Ehrenfest urn

The lecture gives the Ehrenfest urn as a standard reversible example.

Suppose there are d balls split between two boxes. At each step:

- choose one of the d balls uniformly at random;
- move it to the opposite box.

Let

$$X_n = \text{number of balls in Box 1 after the } n\text{-th step.}$$

Then the state space is $\{0, 1, \ldots, d\}$, and from state i,

$$p_{i,i+1} = \frac{d-i}{d}, \qquad p_{i,i-1} = \frac{i}{d}.$$

The natural candidate stationary distribution is binomial:

$$\pi_i = \binom{d}{i} 2^{-d}, \qquad i = 0, 1, \ldots, d.$$

To check detailed balance, compute

$$\pi_i p_{i,i+1} = 2^{-d}\binom{d}{i}\frac{d-i}{d} = 2^{-d}\frac{d!}{i!(d-i)!} \cdot \frac{d-i}{d} = 2^{-d}\frac{(d-1)!}{i!(d-i-1)!}.$$

On the other hand,

$$\pi_{i+1} p_{i+1,i} = 2^{-d}\binom{d}{i+1}\frac{i+1}{d} = 2^{-d}\frac{d!}{(i+1)!(d-i-1)!} \cdot \frac{i+1}{d} = 2^{-d}\frac{(d-1)!}{i!(d-i-1)!}.$$

So

$$\pi_i p_{i,i+1} = \pi_{i+1} p_{i+1,i},$$

which is exactly detailed balance for neighboring states. Hence P is reversible with respect to π, and therefore π is stationary.

Remark 3.11. The notes mention that one can also solve $\pi = \pi P$ directly, but detailed balance is usually the cleaner method when it is available.

3.11. Stationary does not imply reversible

The converse is false: a chain may have a stationary distribution without being reversible.

Proposition 3.12. *There exists a Markov chain with stationary distribution π such that P is not reversible with respect to π.*

Proof. Consider the 3-state chain $\{1, 2, 3\}$ with clockwise transition probability p and counterclockwise transition probability $1 - p$:

$$p_{12} = p, \quad p_{13} = 1 - p,$$

$$p_{23} = p, \quad p_{21} = 1 - p,$$

$$p_{31} = p, \quad p_{32} = 1 - p,$$

with $p \neq \frac{1}{2}$.

Because each column also sums to 1, the matrix is doubly stochastic. Hence

$$\pi_1 = \pi_2 = \pi_3 = \frac{1}{3}$$

is stationary.

But detailed balance fails. For instance,

$$\pi_1 p_{12} = \frac{1}{3}p, \qquad \pi_2 p_{21} = \frac{1}{3}(1-p).$$

These are unequal when $p \neq \frac{1}{2}$. Therefore the chain is not reversible with respect to π. □

3.12. Existence and uniqueness of stationary distributions

The lecture now asks two separate questions:

- when does a stationary distribution exist?
- when is it unique?

The answers depend strongly on whether the chain is finite, infinite, irreducible, or reducible.

Example 3.13 (Simple random walk on $\mathbb{Z}$)**.** For simple random walk on $\mathbb{Z}$, the function

$$\pi_i \equiv 1 \qquad (i \in \mathbb{Z})$$

satisfies

$$\pi = \pi P,$$

so it is a stationary measure. But

$$\sum_{i \in \mathbb{Z}} \pi_i = +\infty,$$

so it is not a stationary distribution.

Example 3.14 (Reducible chain)**.** Suppose the chain has two closed classes with transition matrices P_1 and P_2, and let $\pi^{(1)}$ and $\pi^{(2)}$ be stationary distributions on those classes. Then for any $\lambda \in [0,1]$,

$$\left[\lambda \pi^{(1)}, (1-\lambda)\pi^{(2)}\right]$$

is a stationary distribution for the whole chain.

So in the reducible case, uniqueness can fail very badly.

Theorem 3.15. *If the state space is finite, then at least one stationary distribution always exists.*

This is a standard fixed-point result, usually proved using Brouwer's fixed-point theorem.

3.13. Vanishing probabilities imply non-existence of a stationary distribution

The lecture next proves a useful criterion for non-existence.

Theorem 3.16 (Vanishing probabilities)**.** *Suppose that for every $i, j \in S$,*

$$\lim_{n \to \infty} p_{ij}^{(n)} = 0.$$

Then the Markov chain has no stationary distribution.

Proof. Suppose instead that π is a stationary distribution. Then

$$\pi = \pi P = \pi P^2 = \cdots = \pi P^n \qquad (\forall n \geq 1).$$

So for each fixed j,

$$\pi_j = \sum_{i \in S} \pi_i p_{ij}^{(n)}.$$

If we could pass the limit inside the sum, we would get

$$\pi_j = \sum_{i \in S} \pi_i \lim_{n \to \infty} p_{ij}^{(n)} = \sum_{i \in S} \pi_i \cdot 0 = 0,$$

which is impossible.

To justify the exchange of limit and summation, note that

$$\sup_{n \geq 1} \left| \pi_i p_{ij}^{(n)} \right| \leq \pi_i,$$

hence

$$\sum_{i \in S} \sup_{n \geq 1} \left| \pi_i p_{ij}^{(n)} \right| \leq \sum_{i \in S} \pi_i = 1.$$

So the Weierstrass M-test (equivalently dominated convergence for series) applies, and therefore

$$\pi_j = \lim_{n \to \infty} \sum_{i \in S} \pi_i p_{ij}^{(n)} = \sum_{i \in S} \pi_i \lim_{n \to \infty} p_{ij}^{(n)} = 0.$$

Contradiction. □

3.14. A vanishing lemma

The previous theorem assumes vanishing for every pair i, j. The next lemma shows that in an irreducible chain it is enough to know vanishing for a single well-placed pair.

Lemma 3.17 (Vanishing lemma)**.** *Suppose for some $k, \ell \in S$,*

$$\lim_{n \to \infty} p_{k\ell}^{(n)} = 0.$$

If $k \to i$ and $j \to \ell$, then

$$\lim_{n \to \infty} p_{ij}^{(n)} = 0.$$

Proof. Because $k \to i$, there exists $r \geq 0$ such that

$$p_{ki}^{(r)} > 0.$$

Because $j \to \ell$, there exists $s \geq 0$ such that

$$p_{j\ell}^{(s)} > 0.$$

Then Chapman–Kolmogorov gives

$$p_{k\ell}^{(r+n+s)} \geq p_{ki}^{(r)}\, p_{ij}^{(n)}\, p_{j\ell}^{(s)}.$$

The left-hand side tends to 0 by assumption, while the factors

$$p_{ki}^{(r)}, \quad p_{j\ell}^{(s)}$$

are fixed positive constants. Therefore $p_{ij}^{(n)} \to 0$. □

Proposition 3.18. *For an irreducible Markov chain, if there exists one pair k, ℓ such that*

$$\lim_{n\to\infty} p_{k\ell}^{(n)} = 0,$$

then in fact

$$\lim_{n\to\infty} p_{ij}^{(n)} = 0 \qquad \text{for all } i, j \in S.$$

Consequently, the chain has no stationary distribution.

Proposition 3.19. *A transient irreducible Markov chain cannot have a stationary distribution.*

Proof. For a transient irreducible chain,

$$\sum_{n=1}^{\infty} p_{ij}^{(n)} < \infty \qquad (\forall i, j \in S).$$

Hence $p_{ij}^{(n)} \to 0$ for every i, j, so the previous theorem applies. □

Remark 3.20. For an irreducible chain, the transition probabilities "vanish together":

- either $p_{ij}^{(n)} \to 0$ for every i, j;
- or $p_{ij}^{(n)}$ does not vanish for any i, j.

The second case does *not* necessarily mean the sequence converges; periodic chains are the main counterexample.

3.15. Examples

Example 3.21 (One-dimensional simple random walk)**.** For simple random walk on $\mathbb{Z}$,

$$p_{00}^{(2n)} = \binom{2n}{n} 2^{-2n} \sim \frac{c}{\sqrt{n}} \to 0.$$

So the chain does not have a stationary distribution.

Example 3.22 (An infinite-state chain with a stationary distribution)**.** There are also infinite-state chains for which a genuine stationary distribution *does* exist.

Let

$$S = \{1, 2, 3, \dots\}.$$

Define the transition probabilities by

$$p_{11} = \frac{3}{4}, \qquad p_{12} = \frac{1}{4},$$

and for $i \geq 2$,

$$p_{i,i-1} = \frac{1}{2}, \qquad p_{ii} = \frac{1}{4}, \qquad p_{i,i+1} = \frac{1}{4}.$$

Now set

$$\pi_i = 2^{-i}, \qquad i \geq 1.$$

Since

$$\sum_{i=1}^{\infty} 2^{-i} = 1,$$

this is a probability distribution.

It is also reversible. For $i \geq 1$,

$$\pi_i p_{i,i+1} = 2^{-i} \cdot \frac{1}{4} = 2^{-(i+2)},$$

while

$$\pi_{i+1} p_{i+1,i} = 2^{-(i+1)} \cdot \frac{1}{2} = 2^{-(i+2)}.$$

So

$$\pi_i p_{i,i+1} = \pi_{i+1} p_{i+1,i}.$$

Therefore π is stationary.

Example 3.23. (An infinite-state chain with a stationary distribution)

A simple example is a birth–death chain on

$$S = \{0, 1, 2, \dots\},$$

with transition probabilities

$$P(0,0) = q, \qquad P(0,1) = p,$$

and for every $i \geq 1$,

$$P(i, i+1) = p, \qquad P(i, i-1) = q,$$

where

$$0 < p < q < 1.$$

So the chain tends to move left more often than right, which keeps it from drifting off to infinity.

A picture of the chain is:

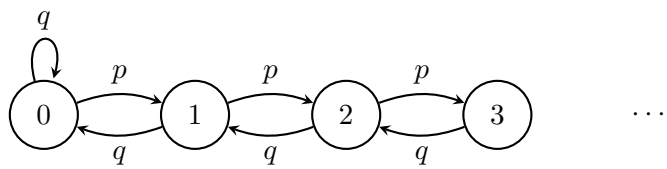

We claim that this chain has stationary distribution

$$\pi_i = (1-r)r^i, \qquad i = 0, 1, 2, \dots,$$

where

$$r = \frac{p}{q}.$$

Since $p < q$, we have $0 < r < 1$, so

$$\sum_{i=0}^{\infty} \pi_i = (1-r)\sum_{i=0}^{\infty} r^i = 1.$$

Thus (π_i) is indeed a probability distribution.

To verify stationarity, it is enough to check the detailed balance equations:

$$\pi_i P(i, i+1) = \pi_{i+1} P(i+1, i), \qquad i \geq 0.$$

Indeed,

$$\pi_i p = (1-r)r^i p,$$

while

$$\pi_{i+1} q = (1-r)r^{i+1} q = (1-r)r^i (rq).$$

But $r = \frac{p}{q}$, so $rq = p$. Therefore

$$\pi_{i+1} q = (1-r)r^i p = \pi_i p.$$

Hence detailed balance holds, so π is a stationary distribution.

Therefore, this infinite-state Markov chain has stationary distribution

$$\boxed{\pi_i = \left(1 - \frac{p}{q}\right)\left(\frac{p}{q}\right)^i, \qquad i = 0, 1, 2, \dots}$$

which is a geometric distribution on $\{0, 1, 2, \dots\}$.

Remark. If $p \geq q$, then the chain no longer has this summable stationary distribution. So the condition $p < q$ is what creates enough drift to the left for a stationary distribution to exist.

3.16. Why stationarity alone does not guarantee convergence

At this point the lecture isolates two separate obstructions to convergence:

- **reducibility**;
- **periodicity**.

Example 3.24 (Reducibility can destroy convergence to a universal limit)**.** Take the two-state chain in which both states are absorbing:

$$P = \begin{pmatrix} 1 & 0 \\ 0 & 1 \end{pmatrix}.$$

Every distribution of the form

$$[\lambda, 1-\lambda], \qquad \lambda \in [0,1],$$

is stationary.

But if the chain starts from state 1, then

$$p_{12}^{(n)} = 0 \qquad (\forall n).$$

So the distribution at time n cannot converge to a prescribed stationary law such as

$$\left[\frac{1}{2}, \frac{1}{2}\right].$$

This shows why irreducibility is necessary in the convergence theorem.

Example 3.25 (Periodicity can destroy convergence even when the stationary law is unique)**.** Consider the deterministic 3-cycle

$$1 \to 2 \to 3 \to 1.$$

This chain is irreducible, and its unique stationary distribution is

$$\pi = \left[\frac{1}{3}, \frac{1}{3}, \frac{1}{3}\right].$$

However,

$$p_{11}^{(n)} = \begin{cases} 1, & \text{if } 3 \mid n, \\ 0, & \text{if } 3 \nmid n. \end{cases}$$

So $p_{11}^{(n)}$ does not converge. Hence uniqueness of the stationary distribution is still not enough; we must also rule out periodicity.

3.17. Period and aperiodicity

Definition 3.26 (Period)**.** The *period* of a state $i \in S$ is

$$d(i) = \gcd\{n \geq 1 : p_{ii}^{(n)} > 0\}.$$

For the 3-cycle above,

$$\{n \geq 1 : p_{11}^{(n)} > 0\} = \{3, 6, 9, \dots\},$$

so $d(1) = 3$.

Two quick ways to get period 1 are:

- if $p_{ii} > 0$, then $1 \in \{n \geq 1 : p_{ii}^{(n)} > 0\}$, hence $d(i) = 1$;
- more generally, if both $p_{ii}^{(n)} > 0$ and $p_{ii}^{(n+1)} > 0$ for some n, then the gcd is 1.

Lemma 3.27 (Equal period lemma)**.** *If $i \leftrightarrow j$, then i and j have the same period.*

Proof. Assume $i \leftrightarrow j$. Then there exist integers $r, s \geq 0$ such that

$$p_{ij}^{(r)} > 0, \qquad p_{ji}^{(s)} > 0.$$

Now suppose $p_{ii}^{(n)} > 0$ for some $n \geq 1$. Then

$$p_{jj}^{(r+n+s)} \geq p_{ji}^{(s)}\, p_{ii}^{(n)}\, p_{ij}^{(r)} > 0.$$

Also,

$$p_{ii}^{(r+s)} \geq p_{ij}^{(r)}\, p_{ji}^{(s)} > 0.$$

Let $d(i)$ and $d(j)$ denote the respective periods. Since $d(j)$ divides every return time to j, it divides both $r + n + s$ and $r + s$, hence it divides their difference n. Therefore every n with $p_{ii}^{(n)} > 0$ is divisible by $d(j)$. This shows

$$d(j) \leq d(i).$$

By symmetry,

$$d(i) \leq d(j).$$

So $d(i) = d(j)$. □

Proposition 3.28. *If a Markov chain is irreducible, then all states have the same period.*

Definition 3.29 (Aperiodicity)**.** A state i is called *aperiodic* if $d(i) = 1$.

An irreducible chain is called *aperiodic* if one (equivalently every) state has period 1.

3.18. The convergence theorem

We now have exactly the right hypotheses: irreducibility rules out the reducible obstruction, and aperiodicity rules out the cyclic obstruction.

Theorem 3.30 (Markov chain convergence)**.** *Suppose a Markov chain is irreducible, aperiodic, and has a stationary distribution π. Then for every $i, j \in S$,*

$$\lim_{n\to\infty} p_{ij}^{(n)} = \pi_j.$$

Equivalently, starting from a fixed state i,

$$\mathbb{P}_i(X_n = j) \longrightarrow \pi_j.$$

More generally, if $X_0 \sim \nu$, then

$$\mathbb{P}_\nu(X_n = j) = \sum_{i \in S} \nu_i p_{ij}^{(n)} \longrightarrow \pi_j.$$

In particular, the limit does not depend on the initial state. So the theorem automatically implies uniqueness of the stationary distribution.

If the chain is

- irreducible,
- aperiodic,
- and admits a stationary distribution π,

then

$$p_{ij}^{(n)} \longrightarrow \pi_j \qquad (\forall i, j \in S).$$

So the chain forgets its starting point and converges to equilibrium.

3.19. Summary

Lecture 3 builds the long-run theory of discrete-time Markov chains.
Main takeaways:

- in an irreducible chain, recurrence and transience admit several equivalent descriptions through f_{ij}, $N(j)$, and the sums $\sum_n p_{ij}^{(n)}$;
- the condition $\exists\, i, j$ with $f_{ij} = 1$ is not enough for recurrence;
- any possible limit of $p_{ij}^{(n)}$ must be stationary, so stationary distributions are the natural candidates for equilibrium;
- doubly stochastic matrices have the uniform stationary law, and detailed balance is a convenient sufficient condition for stationarity;
- finite chains always have at least one stationary distribution, but infinite chains may fail to have one, and reducible chains may have many;
- for irreducible chains, transient behavior forces $p_{ij}^{(n)} \to 0$, so no stationary distribution can exist;
- to obtain convergence to stationarity, one must rule out both reducibility and periodicity;
- the final convergence theorem says that irreducible + aperiodic + stationary distribution implies
$$p_{ij}^{(n)} \to \pi_j.$$

4. Lecture 4

4.1. Logistics note

The handwritten lecture begins with a short reminder about **Midterm #1**:

- it is scheduled for the following week;
- it takes place in the same location;
- the time is roughly 6:10pm – –8:00pm;
- **two pages of cheatsheet notes** are allowed;
- electronics, including calculators, are not allowed;
- the material covered is everything from the first four weeks.

After this announcement, the lecture turns to the main conceptual question: *when does an irreducible Markov chain converge to equilibrium, and when does a stationary distribution exist at all?*

4.2. Main convergence theorem

The first major statement of the lecture is the convergence theorem for irreducible, aperiodic chains.

Theorem 4.1 (Convergence of an irreducible aperiodic chain)**.** *Let P be an irreducible and aperiodic Markov chain on a countable state space S. Assume that P has a stationary distribution π. Then for every $i, j \in S$,*

$$\lim_{n\to\infty} p_{ij}^{(n)} = \pi_j.$$

So once irreducibility and aperiodicity are present, the only remaining issue is whether a stationary distribution exists. Lecture 4 proves the convergence result first, then develops a criterion for the existence of a stationary distribution in terms of return times.

4.3. The key idea: Markov forgetting

The proof begins with the following lemma, called in the lecture the *Markov forgetting* property.

Lemma 4.2 (Markov forgetting)**.** *Assume P is irreducible, aperiodic, and has a stationary distribution. Then for every $i, j, k \in S$,*

$$\lim_{n\to\infty} \left| p_{ik}^{(n)} - p_{jk}^{(n)} \right| = 0.$$

In words, if we look far enough into the future, the chain essentially forgets its starting state.

Once this lemma is known, convergence to π is immediate: compare a chain started from a fixed state with a chain started from stationarity.

4.4. Comparing two copies of the chain

Fix two initial states $i, j \in S$. We want to compare

$$(X_n^{(1)})_{n\geq 0} \quad \text{started from } i, \qquad (X_n^{(2)})_{n\geq 0} \quad \text{started from } j.$$

The lecture constructs a new Markov chain on the product space

$$\overline{S} = S \times S,$$

whose coordinates evolve independently according to P until a suitable coupling time.

If $(x_1, x_2), (y_1, y_2) \in S \times S$, define the product-chain transition probabilities by

$$\overline{p}_{(x_1,x_2),(y_1,y_2)} = p_{x_1y_1} p_{x_2y_2}.$$

Equivalently,

$$\overline{P} = P \otimes P.$$

The marginals of this chain are exactly the two independent copies of the original Markov chain.

4.5. Stationarity for the product chain

If π is stationary for P, then the product measure

$$\overline{\pi}_{(x,y)} = \pi_x \pi_y, \qquad (x, y) \in S \times S,$$

is stationary for $\overline{P}$.

Lemma 4.3 (Product stationary distribution)**.** *If $\pi P = \pi$, then $\overline{\pi}\,\overline{P} = \overline{\pi}$.*

Proof. For $(u, v) \in S \times S$,

$$\sum_{(x,y)\in S\times S} \overline{\pi}_{(x,y)} \overline{p}_{(x,y),(u,v)} = \sum_{x,y} \pi_x \pi_y p_{xu} p_{yv} = \left(\sum_x \pi_x p_{xu}\right)\left(\sum_y \pi_y p_{yv}\right) = \pi_u \pi_v = \overline{\pi}_{(u,v)}.$$

□

So the product chain also has a stationary distribution.

4.6. Why irreducibility of the base chain is not enough

A subtle point in the handwritten notes is that *irreducibility of P alone does not automatically imply irreducibility of the product chain $\overline{P}$.*

For example, if P is the one-dimensional simple random walk, then parity effects prevent the two-coordinate chain from reaching all states of $S \times S$. The obstruction comes from periodicity.

This is exactly where the assumption of **aperiodicity** is used.

4.7. Aperiodicity gives eventual positivity

The first technical lemma says that for an aperiodic state, sufficiently large return times all have positive probability.

Lemma 4.4 (Eventual positivity of return probabilities)**.** *Let $i \in S$ be an aperiodic state. Then there exists $n_0(i) \in \mathbb{N}$ such that*

$$p_{ii}^{(n)} > 0 \qquad \textit{for all } n \geq n_0(i).$$

Idea. Consider the set

$$A_i = \{n \geq 1 : p_{ii}^{(n)} > 0\}.$$

This set is additive: if $m, n \in A_i$, then by Chapman–Kolmogorov,

$$p_{ii}^{(m+n)} \geq p_{ii}^{(m)} p_{ii}^{(n)} > 0,$$

so $m + n \in A_i$.

Aperiodicity means

$$\gcd(A_i) = 1.$$

A standard number-theoretic fact then says that an additive subset of $\mathbb{N}$ with greatest common divisor 1 must contain all sufficiently large integers. Hence $p_{ii}^{(n)} > 0$ for all large n. □

This is the key tool for removing the periodic obstruction.

Proposition 4.5 (Eventual positivity between any two states)**.** *If P is irreducible and aperiodic, then for every $i, j \in S$ there exists $n_0(i, j) \in \mathbb{N}$ such that*

$$p_{ij}^{(n)} > 0 \qquad \textit{for all } n \geq n_0(i, j).$$

Proof. Because the chain is irreducible, there exists some $r \geq 0$ with $p_{ij}^{(r)} > 0$. Since j is aperiodic in an irreducible chain, there exists N such that $p_{jj}^{(m)} > 0$ for all $m \geq N$. Therefore, for every $n \geq r + N$,

$$p_{ij}^{(n)} \geq p_{ij}^{(r)} p_{jj}^{(n-r)} > 0.$$

This proves the claim. □

4.8. Irreducibility of the product chain

Now fix $(i, j), (k, \ell) \in S \times S$. By the corollary above, there exists N such that for all $n \geq N$,

$$p_{ik}^{(n)} > 0 \qquad \text{and} \qquad p_{j\ell}^{(n)} > 0.$$

Hence for all sufficiently large n,

$$\overline{p}_{(i,j),(k,\ell)}^{(n)} = p_{ik}^{(n)} p_{j\ell}^{(n)} > 0.$$

So the product chain is irreducible.

Because it also has a stationary distribution $\overline{\pi}$, the product chain is in fact positive recurrent. In particular, every state of $S \times S$ is recurrent.

4.9. Hitting a common reference state

Fix some reference state $i_0 \in S$, and define

$$\tau = \inf\{n \geq 0 : X_n^{(1)} = X_n^{(2)} = i_0\}.$$

Since the product chain is irreducible and positive recurrent, every state is recurrent, so from any starting point $(i, j) \in S \times S$,

$$\overline{\mathbb{P}}_{i,j}(\tau < \infty) = 1.$$

This is the coupling time used in the notes: we wait until both copies hit the same distinguished state i_0 at the same time.

4.10. Proof of Markov forgetting by coupling

Up to time τ, let the two coordinates evolve independently according to the product chain. At time τ, both coordinates equal i_0. From that moment on, we can force the two chains to use the same randomness, so that they move together forever after time τ.

Fix $k \in S$. For the first chain,

$$p_{ik}^{(n)} = \overline{\mathbb{P}}_{i,j}(X_n^{(1)} = k).$$

Split according to the value of τ:

$$p_{ik}^{(n)} = \sum_{m=0}^{n} \overline{\mathbb{P}}_{i,j}(X_n^{(1)} = k, \tau = m) + \overline{\mathbb{P}}_{i,j}(X_n^{(1)} = k, \tau \geq n+1).$$

When $\tau = m \leq n$, the first chain is at i_0 at time m, so by the Markov property,

$$\overline{\mathbb{P}}_{i,j}(X_n^{(1)} = k, \tau = m) = \overline{\mathbb{P}}_{i,j}(\tau = m)\, p_{i_0 k}^{(n-m)}.$$

Thus

$$p_{ik}^{(n)} = \sum_{m=0}^{n} \overline{\mathbb{P}}_{i,j}(\tau = m)\, p_{i_0 k}^{(n-m)} + \overline{\mathbb{P}}_{i,j}(X_n^{(1)} = k, \tau \geq n+1).$$

Exactly the same argument gives

$$p_{jk}^{(n)} = \sum_{m=0}^{n} \overline{\mathbb{P}}_{i,j}(\tau = m)\, p_{i_0 k}^{(n-m)} + \overline{\mathbb{P}}_{i,j}(X_n^{(2)} = k, \tau \geq n+1).$$

Subtracting,

$$\left| p_{ik}^{(n)} - p_{jk}^{(n)} \right| \leq \overline{\mathbb{P}}_{i,j}(X_n^{(1)} = k, \tau \geq n+1) + \overline{\mathbb{P}}_{i,j}(X_n^{(2)} = k, \tau \geq n+1) \leq 2\,\overline{\mathbb{P}}_{i,j}(\tau \geq n+1).$$

Since $\overline{\mathbb{P}}_{i,j}(\tau < \infty) = 1$, we have

$$\overline{\mathbb{P}}_{i,j}(\tau \geq n+1) \to 0,$$

and therefore

$$\left| p_{ik}^{(n)} - p_{jk}^{(n)} \right| \to 0.$$

This proves the Markov forgetting lemma.

For the coupling time

$$\tau = \inf\{n \geq 0 : X_n^{(1)} = X_n^{(2)} = i_0\},$$

one has

$$\left| p_{ik}^{(n)} - p_{jk}^{(n)} \right| \leq 2\,\overline{\mathbb{P}}_{i,j}(\tau \geq n+1) \longrightarrow 0.$$

This is the precise mathematical form of "the chain forgets where it started."

4.11. From forgetting to convergence to stationarity

Now compare a chain started from i with a chain started from the stationary distribution π. Since $\pi P^n = \pi$, we have

$$\pi_j = \sum_{k \in S} \pi_k p_{kj}^{(n)}.$$

Hence

$$\left| p_{ij}^{(n)} - \pi_j \right| = \left| p_{ij}^{(n)} - \sum_{k \in S} \pi_k p_{kj}^{(n)} \right| \leq \sum_{k \in S} \pi_k \left| p_{ij}^{(n)} - p_{kj}^{(n)} \right|.$$

For each fixed k, the Markov forgetting lemma says that

$$\left| p_{ij}^{(n)} - p_{kj}^{(n)} \right| \to 0.$$

Also,

$$0 \leq \pi_k \left| p_{ij}^{(n)} - p_{kj}^{(n)} \right| \leq \pi_k, \qquad \sum_{k \in S} \pi_k = 1.$$

So by dominated convergence,

$$\left| p_{ij}^{(n)} - \pi_j \right| \to 0.$$

Therefore,

$$p_{ij}^{(n)} \to \pi_j.$$

4.12. Initial distributions, not just initial states

The same argument works if the chain starts from an arbitrary initial distribution ν. Indeed,

$$\mathbb{P}_\nu(X_n = j) = \sum_{i \in S} \nu_i p_{ij}^{(n)}.$$

Since $p_{ij}^{(n)} \to \pi_j$ for every i, dominated convergence yields

$$\mathbb{P}_\nu(X_n = j) \to \pi_j.$$

So the limiting distribution is independent of the starting law.

4.13. What changes in the periodic case?

The lecture next asks what happens if the chain is irreducible but periodic.

Suppose the chain has period $b \geq 2$. Then the state space can be decomposed into cyclic classes

$$S_0, S_1, \ldots, S_{b-1},$$

such that transitions go from S_r into $S_{r+1 \,(\mathrm{mod}\ b)}$.

In that case, the chain keeps rotating through the classes, so the full limit $p_{ij}^{(n)} \to \pi_j$ generally fails. However, the stationary distribution spreads equally across the cyclic classes:

$$\pi(S_0) = \pi(S_1) = \cdots = \pi(S_{b-1}) = \frac{1}{b}.$$

Theorem 4.6 (Averaged convergence for a periodic chain)**.** *Assume P is irreducible of period $b \geq 2$, and assume P has a stationary distribution π. Then for every $i, j \in S$,*

$$\lim_{n\to\infty} \frac{1}{b}\Big(p_{ij}^{(n)} + p_{ij}^{(n+1)} + \cdots + p_{ij}^{(n+b-1)}\Big) = \pi_j.$$

Idea. If we look at P^b restricted to a single cyclic class S_r, then the periodicity disappears: inside each class, P^b is irreducible and aperiodic. Therefore the convergence theorem applies to P^b on each S_r. Averaging across one complete cycle of length b then gives the displayed limit. □

Proposition 4.7 (Cesàro convergence)**.** *If P is irreducible and has a stationary distribution π, then for every $i, j \in S$,*

$$\lim_{N\to\infty} \frac{1}{N} \sum_{n=1}^{N} p_{ij}^{(n)} = \pi_j.$$

So even when pointwise convergence fails because of periodic oscillation, the time average still converges to π.

As a consequence, if an irreducible chain has a stationary distribution, then that stationary distribution must be unique.

4.14. The next question: when does a stationary distribution exist?

The second half of Lecture 4 addresses the existence problem.

For a state $i \in S$, define the first return time

$$T_i = \inf\{n \geq 1 : X_n = i\}.$$

If the chain is recurrent, then

$$\mathbb{P}_i(T_i < \infty) = 1.$$

But recurrence alone does *not* imply

$$\mathbb{E}_i[T_i] < \infty.$$

This distinction leads to the notions of *positive recurrence* and *null recurrence*.

4.15. Excursion decomposition and the heuristic formula

The notes draw the trajectory starting from i and split it into blocks:

$$X_0 = i, X_1, X_2, \ldots, X_{T_i - 1} \qquad \Big| \qquad X_{T_i} = i,$$

then the next block between the first and second returns, and so on. These blocks are i.i.d. by the strong Markov property.

This picture suggests the following heuristic.

- The average length of one excursion block should be $\mathbb{E}_i[T_i]$.
- Each block contains exactly one visit to i, namely at its start.
- Therefore the long-run frequency of visits to i should be roughly

$$\frac{1}{\mathbb{E}_i[T_i]}.$$

- But in stationarity, the long-run frequency of visits to i is exactly π_i.

So the lecture predicts the fundamental formula

$$\pi_i = \frac{1}{\mathbb{E}_i[T_i]}.$$

The rest of the lecture makes this precise.

4.16. A stationary measure built from one excursion

Fix a recurrent irreducible chain and a reference state $i_0 \in S$. Define

$$\mu_{i_0}(j) = \sum_{n=0}^{\infty} \mathbb{P}_{i_0}(X_n = j,\, T_{i_0} > n), \qquad j \in S.$$

This quantity counts the expected number of visits to j during one excursion away from i_0, including time 0 and stopping just before the return to i_0.

Theorem 4.8 (Canonical stationary measure)**.** *Assume P is irreducible and recurrent. Then for every fixed $i_0 \in S$:*

(i) $\mu_{i_0}(j) < \infty$ *for every* $j \in S$*;*

(ii) $\mu_{i_0}(i_0) = 1$*;*

(iii) μ_{i_0} *is a stationary measure, i.e.*

$$\mu_{i_0} P = \mu_{i_0}.$$

Proof. First,

$$\mu_{i_0}(i_0) = \sum_{n=0}^{\infty} \mathbb{P}_{i_0}(X_n = i_0,\, T_{i_0} > n).$$

Only the term $n = 0$ contributes, because for $n \geq 1$, the event $X_n = i_0$ together with $T_{i_0} > n$ is impossible. Thus

$$\mu_{i_0}(i_0) = 1.$$

Now fix $k \in S$. We compute

$$\sum_{j \in S} \mu_{i_0}(j) p_{jk} = \sum_{j \in S} \sum_{n=0}^{\infty} \mathbb{P}_{i_0}(X_n = j, T_{i_0} > n) p_{jk}.$$

By Tonelli's theorem,

$$\sum_{j \in S} \mu_{i_0}(j) p_{jk} = \sum_{n=0}^{\infty} \sum_{j \in S} \mathbb{P}_{i_0}(X_n = j, T_{i_0} > n) p_{jk}.$$

Use the Markov property at time n.

If $k \neq i_0$, then moving from j to k at time $n+1$ automatically means the chain has not yet returned to i_0, so

$$\sum_{j \in S} \mathbb{P}_{i_0}(X_n = j, T_{i_0} > n) p_{jk} = \mathbb{P}_{i_0}(X_{n+1} = k, T_{i_0} > n+1).$$

Hence

$$\sum_{j \in S} \mu_{i_0}(j) p_{jk} = \sum_{n=0}^{\infty} \mathbb{P}_{i_0}(X_{n+1} = k, T_{i_0} > n+1) = \mu_{i_0}(k) \qquad (k \neq i_0).$$

If $k = i_0$, then the only way to land in i_0 at time $n+1$ while still having $T_{i_0} > n$ is that the first return occurs exactly at time $n+1$. Therefore

$$\sum_{j \in S} \mathbb{P}_{i_0}(X_n = j, T_{i_0} > n) p_{ji_0} = \mathbb{P}_{i_0}(T_{i_0} = n+1).$$

Summing over n gives

$$\sum_{j \in S} \mu_{i_0}(j) p_{ji_0} = \sum_{n=0}^{\infty} \mathbb{P}_{i_0}(T_{i_0} = n+1) = 1 = \mu_{i_0}(i_0).$$

So $\mu_{i_0} P = \mu_{i_0}$.

It remains to show finiteness. Since the chain is irreducible, for each $j \in S$ there exists $m \geq 0$ such

that $p_{ji_0}^{(m)} > 0$. Using stationarity of μ_{i_0},

$$1 = \mu_{i_0}(i_0) = \sum_{\ell \in S} \mu_{i_0}(\ell) p_{\ell i_0}^{(m)} \geq \mu_{i_0}(j) p_{ji_0}^{(m)}.$$

Hence

$$\mu_{i_0}(j) \leq \frac{1}{p_{ji_0}^{(m)}} < \infty.$$

This proves all claims. □

Remark 4.9. The measure μ_{i_0} is supported on all states in an irreducible recurrent chain, so in fact $\mu_{i_0}(j) > 0$ for every $j \in S$. In a reducible chain, a stationary measure may live only on a smaller closed class, so irreducibility matters here.

4.17. When can the stationary measure be normalized?

The total mass of μ_{i_0} is

$$\sum_{j \in S} \mu_{i_0}(j) = \sum_{j \in S} \sum_{n=0}^{\infty} \mathbb{P}_{i_0}(X_n = j, T_{i_0} > n).$$

Interchanging the sums,

$$\sum_{j \in S} \mu_{i_0}(j) = \sum_{n=0}^{\infty} \sum_{j \in S} \mathbb{P}_{i_0}(X_n = j, T_{i_0} > n) = \sum_{n=0}^{\infty} \mathbb{P}_{i_0}(T_{i_0} > n).$$

But for a positive integer-valued random variable,

$$\sum_{n=0}^{\infty} \mathbb{P}(T_{i_0} > n) = \mathbb{E}_{i_0}[T_{i_0}].$$

Therefore,

$$\sum_{j \in S} \mu_{i_0}(j) = \mathbb{E}_{i_0}[T_{i_0}].$$

This shows exactly when μ_{i_0} can be normalized to a probability distribution.

Definition 4.10 (Positive recurrence)**.** A state $i \in S$ is called *positive recurrent* if

$$\mathbb{E}_i[T_i] < \infty.$$

If i is recurrent but

$$\mathbb{E}_i[T_i] = \infty,$$

then i is called *null recurrent*.

Proposition 4.11 (Stationary distribution from positive recurrence)**.** *If P is irreducible and re-*

current, and if some state i satisfies $\mathbb{E}_i[T_i] < \infty$, then

$$\pi_j = \frac{\mu_i(j)}{\mathbb{E}_i[T_i]}, \qquad j \in S,$$

defines a stationary distribution.

Thus positive recurrence is the correct condition for existence of a stationary distribution.

4.18. Classifying irreducible chains

Positive recurrence is a class property.

Proposition 4.12 (Communication preserves positive recurrence)**.** *If $i \leftrightarrow j$ and i is positive recurrent, then j is also positive recurrent.*

Hence in an irreducible chain, either all states are positive recurrent or none are.

Proposition 4.13 (Existence criterion)**.** *For an irreducible Markov chain, the following are equivalent:*

(i) there exists a stationary distribution;

(ii) one state is positive recurrent;

(iii) every state is positive recurrent.

So an irreducible chain falls into exactly one of three regimes:

- **transient**;
- **null recurrent**;
- **positive recurrent**.

Only in the positive recurrent case does a stationary *distribution* exist. In the recurrent cases, a stationary *measure* always exists, but it may have infinite total mass.

4.19. Long-run frequency of visits

The final theorem of the lecture identifies the frequency of visits to a state in terms of the mean return time.

For $i \in S$, let

$$N_n(i) = \sum_{t=1}^{n} \mathbf{1}\{X_t = i\}$$

be the number of visits to i up to time n.

Theorem 4.14 (Visit-frequency theorem)**.** *Assume P is irreducible and recurrent. Then for every $i \in S$,*

$$\frac{N_n(i)}{n} \longrightarrow \frac{1}{\mathbb{E}_i[T_i]} \qquad \textit{almost surely,}$$

with the convention that $1/\infty = 0$.

This is the strong-law version of convergence for Markov chains: the empirical proportion of time spent at state i equals the reciprocal of the mean return time to i.

4.20. Proof via i.i.d. excursion blocks

Let

$$T_i^{(k)} = \text{time of the } k\text{-th visit to } i, \qquad k \geq 1,$$

and set $T_i^{(0)} = 0$. Then the blocks

$$\big(X_t : T_i^{(k)} < t \leq T_i^{(k+1)}\big), \qquad k = 0, 1, 2, \ldots,$$

are i.i.d. by the strong Markov property.

The increments

$$Y_k = T_i^{(k)} - T_i^{(k-1)}, \qquad k \geq 1,$$

are therefore i.i.d. with the same law as T_i under $\mathbb{P}_i$.

Also,

$$T_i^{(N_n(i))} \leq n < T_i^{(N_n(i)+1)}.$$

Dividing by $N_n(i)$,

$$\frac{T_i^{(N_n(i))}}{N_n(i)} \leq \frac{n}{N_n(i)} \leq \frac{T_i^{(N_n(i)+1)}}{N_n(i)}.$$

Because the chain is recurrent, $N_n(i) \to \infty$ almost surely. So it is enough to understand the asymptotic behavior of $T_i^{(k)}/k$.

Now

$$\frac{T_i^{(k)}}{k} = \frac{1}{k}\sum_{\ell=1}^{k}\big(T_i^{(\ell)} - T_i^{(\ell-1)}\big) = \frac{1}{k}\sum_{\ell=1}^{k} Y_\ell.$$

By the strong law of large numbers,

$$\frac{T_i^{(k)}}{k} \to \mathbb{E}_i[T_i] \qquad \text{almost surely}$$

when $\mathbb{E}_i[T_i] < \infty$, and it diverges to $+\infty$ if $\mathbb{E}_i[T_i] = \infty$. The same is true for

$$\frac{T_i^{(k+1)}}{k} = \frac{T_i^{(k+1)}}{k+1} \cdot \frac{k+1}{k}.$$

Therefore the squeeze inequality gives

$$\frac{n}{N_n(i)} \to \mathbb{E}_i[T_i] \qquad \text{almost surely,}$$

which is equivalent to

$$\frac{N_n(i)}{n} \to \frac{1}{\mathbb{E}_i[T_i]}.$$

4.21. Recovering the stationary distribution formula

Suppose now that P is irreducible and has a stationary distribution π. Then the Cesàro convergence theorem gives

$$\frac{1}{n}\sum_{t=1}^{n} p_{ii}^{(t)} \to \pi_i.$$

But

$$\mathbb{E}_i[N_n(i)] = \sum_{t=1}^{n} \mathbb{P}_i(X_t = i) = \sum_{t=1}^{n} p_{ii}^{(t)},$$

so

$$\frac{\mathbb{E}_i[N_n(i)]}{n} \to \pi_i.$$

On the other hand, from the visit-frequency theorem and dominated convergence,

$$\frac{\mathbb{E}_i[N_n(i)]}{n} \to \frac{1}{\mathbb{E}_i[T_i]}.$$

Hence

$$\pi_i = \frac{1}{\mathbb{E}_i[T_i]}.$$

This completes the "other direction" promised by the lecture: if a stationary distribution exists, then the chain must be positive recurrent, and its stationary probabilities are determined by mean return times.

For an irreducible positive recurrent Markov chain,

$$\pi_i = \frac{1}{\mathbb{E}_i[T_i]} \qquad \text{for every } i \in S.$$

This is one of the most important formulas in the theory of Markov chains.

4.22. Summary

Lecture 4 has two big themes.

(1) Convergence to stationarity.

- If P is irreducible, aperiodic, and has a stationary distribution π, then
$$p_{ij}^{(n)} \to \pi_j.$$
- The proof is based on a coupling argument on the product chain $S \times S$.
- The key lemma is *Markov forgetting*:
$$\left| p_{ik}^{(n)} - p_{jk}^{(n)} \right| \to 0.$$
- If the chain is periodic, pointwise convergence may fail, but Cesàro averages still converge to π.

(2) Existence of a stationary distribution.

- For a recurrent irreducible chain, one can always build a stationary measure
$$\mu_i(j) = \sum_{n \geq 0} \mathbb{P}_i(X_n = j, T_i > n).$$
- Its total mass is exactly $\mathbb{E}_i[T_i]$.
- Therefore a stationary distribution exists *iff* the chain is positive recurrent.
- In that case,
$$\pi_i = \frac{1}{\mathbb{E}_i[T_i]}.$$
- Null recurrent and transient irreducible chains do not admit stationary distributions.

5. Midterm 1

STA447/2006: Midterm Exam #1

Instructor: Wenlong Mou
Date: February 4, 2026
Total marks: 100 points
Time allowed: 150 minutes

Question 1 [30 points]

Mark each of the following statements with T (true) or F (false). No justification is required.

(1) If for some states i, j we have
$$\sum_{n\geq 0} p_{ij}^{(n)} < \infty,$$
then j is transient.
Answer: F

(2) If for some states i, j we have
$$\sum_{n\geq 0} p_{ij}^{(n)} = \infty,$$
then j is recurrent.
Answer: T

(3) Let P be an irreducible and transient Markov chain. Then for any pair $i, j \in S$, with probability 1, the Markov chain starting from i will visit j only finitely many times.
Answer: T

(4) Let i, j be a pair of states of an irreducible Markov chain P. If $f_{ij} = 1$, then P is recurrent.
Answer: F

(5) There exists a Markov chain that has infinitely many stationary distributions.
Answer: T

(6) Let P be a Markov chain with stationary measure π. If we have
$$\lim_{n\to\infty} |p_{ij}^{(n)} - p_{ik}^{(n)}| = 0$$
for any $i, j, k \in S$, then π can be normalized to become a stationary distribution $\tilde{\pi}$, with
$$\lim_{n\to\infty} p_{ij}^{(n)} = \tilde{\pi}_j.$$
Answer: F

(7) If state i is aperiodic and $i \to j$, then state j is also necessarily aperiodic.
Answer: F

(8) Let P be an irreducible Markov chain on a finite state space S. Then P has a unique stationary distribution.
Answer: T

(9) Let P be a reducible Markov chain and $i \in S$ a transient state. If P has a stationary distribution π, then we must have $\pi_i = 0$.
Answer: T

(10) Let P be a reducible Markov chain and $i \in S$ a transient state. If P has a stationary measure π, then we must have $\pi_i = 0$.
Answer: F

Rubrics: Each item is worth 3 points. No justification is required, and no partial credit is given.

Question 2 [20 points]

Consider a Markov chain on a finite state space

$$S = \{1, 2, 3, 4, 5\},$$

with transition matrix

$$P = \begin{pmatrix} 1 & 0 & 0 & 0 & 0 \\ \frac{1}{4} & 0 & \frac{1}{2} & 0 & \frac{1}{4} \\ 0 & \frac{1}{2} & 0 & \frac{1}{2} & 0 \\ 0 & 0 & 0 & \frac{1}{2} & \frac{1}{2} \\ 0 & 0 & 0 & 0 & 1 \end{pmatrix}.$$

(1) **[5 pts]** Which states are recurrent? Which states are transient? Please explain your reasoning.

Answer: States 1 and 5 are recurrent, while states $2, 3, 4$ are transient.

Rubrics: 1 point for each state.

(2) **[9 pts]** Compute f_{25} and $\mathbb{E}_2[N(3)]$, where $N(i)$ is the number of visits to state i. Explain your reasoning.

Answer: We use f-expansion:

$$f_{25} = p_{21} f_{15} + p_{23} f_{35} + p_{25} = \frac{1}{4} \cdot 0 + \frac{1}{2} f_{35} + \frac{1}{4},$$

$$f_{35} = p_{32} f_{25} + p_{34} f_{45} = \frac{1}{2} f_{25} + \frac{1}{2} f_{45},$$

$$f_{45} = p_{44} f_{45} + p_{45} = \frac{1}{2} f_{45} + \frac{1}{2}.$$

From the last equation, $f_{45} = 1$. Therefore,

$$f_{25} = \frac{1}{2} f_{35} + \frac{1}{4}, \qquad f_{35} = \frac{1}{2} f_{25} + \frac{1}{2}.$$

Solving,

$$f_{25} = \frac{2}{3}, \qquad f_{35} = \frac{5}{6}.$$

To compute $\mathbb{E}_2[N(3)]$, use

$$\mathbb{E}_2[N(3)] = \frac{f_{23}}{1 - f_{33}}.$$

Now

$$f_{23} = p_{21} f_{13} + p_{23} + p_{25} f_{53} = \frac{1}{2},$$

and

$$f_{33} = p_{32} f_{23} + p_{34} f_{43} = \frac{1}{4}.$$

Hence

$$\mathbb{E}_2[N(3)] = \frac{1/2}{1 - 1/4} = \frac{2}{3}.$$

Rubrics:

- 4 points for computing f_{25} correctly.
- 5 points for computing $\mathbb{E}_2[N(3)]$ correctly.
- For each part, if the correct method is used but there are minor calculation mistakes, deduct 1 point.

(3) **[6 pts]** Let $X_0 = 2$. Compute the probability that state 4 is never visited but the chain is eventually absorbed by state 5.

Answer: Starting from state 4, the chain is eventually absorbed by state 5 with probability 1. So the desired probability is

$$f_{25} - f_{24}.$$

From part (2), $f_{25} = \frac{2}{3}$. To compute f_{24},

$$f_{24} = p_{21} f_{14} + p_{23} f_{34} + p_{25} f_{54} = \frac{1}{4} \cdot 0 + \frac{1}{2} f_{34} + \frac{1}{4} \cdot 0 = \frac{1}{2} f_{34},$$

$$f_{34} = p_{32} f_{24} + p_{34} = \frac{1}{2} f_{24} + \frac{1}{2}.$$

Solving,

$$f_{24} = \frac{1}{3}, \qquad f_{34} = \frac{2}{3}.$$

Therefore the desired probability is

$$f_{25} - f_{24} = \frac{2}{3} - \frac{1}{3} = \frac{1}{3}.$$

Rubrics:

- Any other correct method is acceptable.
- If the overall idea is correct but there are minor calculation mistakes, deduct 1 point.
- If you realize the desired probability is $f_{25} - f_{24}$, you get 2 points.

Question 3 [15 points]

Recall the independent coupling defined in class. Consider two copies of Markov chains

$$\{X_n^{(1)}\}_{n\geq 0} \qquad \text{and} \qquad \{X_n^{(2)}\}_{n\geq 0}$$

with the same transition matrix P. At each step, the two chains move independently according to P, regardless of their current states. Assume P is irreducible, aperiodic, and recurrent (but not necessarily positive recurrent).

(1) **[6 pts]** Show that the joint chain

$$\{(X_n^{(1)}, X_n^{(2)})\}_{n\geq 0}$$

has a stationary measure.

Answer: Let π be a stationary measure of P. Then $\pi \otimes \pi$ is a stationary measure for the joint chain, i.e.

$$(\pi \otimes \pi)(i,j) = \pi_i \pi_j.$$

Indeed,

$$\sum_{(k,l)\in S\times S} (\pi \otimes \pi)(k,l)\, p_{(k,l),(i,j)} = \sum_{k,l} \pi_k \pi_l\, p_{ki} p_{lj} = \left(\sum_k \pi_k p_{ki}\right)\left(\sum_l \pi_l p_{lj}\right) = \pi_i \pi_j.$$

Rubrics:

- If you construct the correct stationary measure but do not verify stationarity, you can get 3 points.
- An incomplete verification gets partial credit.

(2) [9 pts] Construct a Markov chain P satisfying the above conditions such that the joint chain

$$\{(X_n^{(1)}, X_n^{(2)})\}_{n\geq 0}$$

is transient.

Answer: Let P be a lazy version of two-dimensional simple random walk on $\mathbb{Z}^2$:

$$X_{n+1} = X_n + (\varepsilon_{n+1}^{(1)}, \varepsilon_{n+1}^{(2)}),$$

where $\varepsilon_{n+1}^{(1)}$ and $\varepsilon_{n+1}^{(2)}$ are i.i.d. with

$$\mathbb{P}(\varepsilon_{n+1}^{(1)} = 0) = \frac{1}{2}, \qquad \mathbb{P}(\varepsilon_{n+1}^{(1)} = \pm 1) = \frac{1}{4} \text{ each},$$

and the same distribution for $\varepsilon_{n+1}^{(2)}$.

This chain is irreducible and aperiodic. It is recurrent since simple random walk on $\mathbb{Z}^2$ is recurrent. But the joint chain can be viewed as a lazy random walk on $\mathbb{Z}^4$, which is transient.

Rubrics:

- Any valid construction gets full credit.
- If the construction is valid but you do not explain why the joint chain is transient, you can get 8 points.
- If you use ordinary two-dimensional simple random walk without laziness, you can get 6 points since the chain is not aperiodic.

Question 4 [8 points]

Let P be an irreducible Markov chain on a finite state space S. Let T_i be the hitting time to state i. Show that for any state $i \in S$,

$$\mathbb{E}_i[T_i^n] < \infty, \qquad \text{for any } n \in \mathbb{N}_+.$$

Answer: Since P is irreducible, for every $j \in S$, there exists $m_j \in \mathbb{N}_+$ such that

$$p_{ji}^{(m_j)} > 0.$$

Let

$$m = \max_{j \in S} m_j, \qquad \varepsilon = \min_{j \in S} p_{ji}^{(m_j)}.$$

Since S is finite,

$$m < \infty, \qquad \varepsilon > 0.$$

Hence

$$\mathbb{P}_j(T_i > m) \le 1 - \varepsilon, \qquad \text{for all } j \in S.$$

Therefore, for any $k \in \mathbb{N}_+$,

$$\mathbb{P}_i(T_i > km) \le (1-\varepsilon)^k.$$

Then

$$\mathbb{E}_i[T_i^n] = \sum_{t=0}^{\infty} \mathbb{P}_i(T_i \ge t)\big((t+1)^n - t^n\big) \le \sum_{t=0}^{\infty} (1-\varepsilon)^{\lfloor t/m \rfloor}(n+1)(t+1)^{n-1} < \infty.$$

Rubrics:

- If you cite the relevant Lawler practice result clearly and use it correctly, full credit.

- If you prove the exponential tail bound but do not finish the moment argument, 5 points.
- If you only prove $\mathbb{E}_i[T_i] < \infty$, 2 points.

Question 5 [15 points]

Consider a Markov chain on

$$S = \{0, 1, 2, \dots\}.$$

For $i \geq 1$, define

$$p_{i,i+1} = \frac{i}{2i+2}, \qquad p_{i,i-1} = \frac{i+2}{2i+2},$$

and $p_{i,j} = 0$ for $j \notin \{i-1, i+1\}$. Also let

$$p_{0,1} = 1, \qquad p_{0,j} = 0 \quad (j > 1).$$

(1) **[7 pts]** Let T_i be the hitting time to state i. Compute $\mathbb{E}_0[T_0]$.

Answer: Since the chain is irreducible,

$$\mathbb{E}_0[T_0] = \frac{1}{\pi_0},$$

where π is the stationary distribution.

Using detailed balance,

$$\pi_i p_{i,i+1} = \pi_{i+1} p_{i+1,i}.$$

First,

$$\pi_0 \cdot 1 = \pi_1 \cdot \frac{3}{4} \quad \Rightarrow \quad \pi_1 = \frac{4}{3}\pi_0.$$

For $i \geq 1$,

$$\pi_i \frac{i}{2(i+1)} = \pi_{i+1} \frac{i+3}{2(i+2)} \quad \Rightarrow \quad \pi_{i+1} = \pi_i \frac{i(i+2)}{(i+1)(i+3)}.$$

Hence, for $n \geq 1$,

$$\pi_n = \pi_1 \prod_{k=1}^{n-1} \frac{k(k+2)}{(k+1)(k+3)} = \frac{4}{3}\pi_0 \prod_{k=1}^{n-1} \frac{k}{k+1} \cdot \frac{k+2}{k+3} = \pi_0 \frac{4}{n(n+2)}.$$

Normalize:

$$1 = \sum_{n=0}^{\infty} \pi_n = \pi_0 + \sum_{n=1}^{\infty} \pi_0 \frac{4}{n(n+2)} = \pi_0 \left(1 + 4 \sum_{n=1}^{\infty} \frac{1}{n(n+2)}\right).$$

Since

$$\frac{1}{n(n+2)} = \frac{1}{2}\left(\frac{1}{n} - \frac{1}{n+2}\right),$$

we get

$$\sum_{n=1}^{\infty} \frac{1}{n(n+2)} = \frac{3}{4}.$$

So

$$1 = \pi_0(1 + 4 \cdot \tfrac{3}{4}) = 4\pi_0, \qquad \pi_0 = \frac{1}{4}.$$

Therefore,

$$\mathbb{E}_0[T_0] = \frac{1}{\pi_0} = 4.$$

Rubrics:

- 2 points for realizing $\mathbb{E}_0[T_0] = 1/\pi_0$.
- 5 points for computing π_0 correctly.
- Minor calculation errors: deduct 1 point.
- If you get only a stationary measure but do not normalize it, you can get 3 of the 5 computation points.

(2) **[8 pts]** Compute

$$\mathbb{E}_0\left[\sum_{t=1}^{T_0} \mathbf{1}_{\{X_t=1\}}\right].$$

Answer: By the stationary-measure construction from lecture,

$$\mu_0(0) = 1, \qquad \mu_0(i) = \mathbb{E}_0\left[\sum_{t=1}^{T_0} \mathbf{1}_{\{X_t=i\}}\right] \quad (i \geq 1)$$

defines a stationary measure.

Since the chain is irreducible and positive recurrent, normalizing μ_0 gives the unique stationary distribution:

$$\tilde{\mu}(i) = \frac{\mu_0(i)}{\sum_{j\in S} \mu_0(j)} = \pi_i.$$

Therefore,

$$\mu_0(1) = \pi_1 \sum_{j\in S} \mu_0(j) = \frac{\pi_1}{\pi_0}.$$

Since

$$\pi_1 = \frac{4}{3}\pi_0,$$

we obtain

$$\mathbb{E}_0\left[\sum_{t=1}^{T_0} \mathbf{1}_{\{X_t=1\}}\right] = \mu_0(1) = \frac{\pi_1}{\pi_0} = \frac{4}{3}.$$

Rubrics:

- 5 points for correctly using the stationary measure construction.
- 2 points for correctly computing π_1/π_0.

- 1 point for explaining uniqueness to conclude $\tilde{\mu} = \pi$.

Question 6 **[12 points]**

During class, asymptotic convergence of Markov chains was proved using independent coupling. In this problem, the idea is extended to general coupling and explicit convergence rates.

Suppose we can construct a joint chain

$$\{(X_n^{(1)}, X_n^{(2)})\}_{n\geq 0},$$

such that marginally $\{X_n^{(1)}\}$ and $\{X_n^{(2)}\}$ are both Markov chains with the same transition matrix P (but not necessarily independent). Suppose

$$X_0^{(1)} = i \qquad \text{and} \qquad X_0^{(2)} \sim \pi,$$

where π is the stationary distribution. Define the coupling time

$$T = \inf\{n \geq 0 : X_n^{(1)} = X_n^{(2)}\}.$$

(1) **[4 pts]** Show that for any $n \geq 0$,

$$\sum_{j\in S} |p_{ij}^{(n)} - \pi_j| \leq 2\mathbb{P}(T \geq n).$$

Hint: For any two discrete distributions μ, ν on S, and any coupling (X, Y) of μ, ν,

$$\sum_{j\in S} |\mu_j - \nu_j| \leq 2\mathbb{P}(X \neq Y).$$

Answer: Under the coupling,

$$X_n^{(1)} \sim P^n(i, \cdot), \qquad X_n^{(2)} \sim \pi.$$

Applying the hint,

$$\sum_{j\in S} |p_{ij}^{(n)} - \pi_j| \leq 2\mathbb{P}(X_n^{(1)} \neq X_n^{(2)}).$$

By the strong Markov property, after the first meeting time T, we may modify the coupling so the chains move together forever:

$$X_{T+k}^{(1)} = X_{T+k}^{(2)} \qquad \text{for all } k \geq 0.$$

Hence

$$\mathbb{P}(X_n^{(1)} \neq X_n^{(2)}) = \mathbb{P}(T \geq n),$$

and therefore

$$\sum_{j\in S} |p_{ij}^{(n)} - \pi_j| \le 2\mathbb{P}(T \ge n).$$

Rubrics: If you only apply the hint but do not explain why

$$\mathbb{P}(X_n^{(1)} \ne X_n^{(2)}) = \mathbb{P}(T \ge n),$$

you get 2 points.

(2) **[8 pts]** Consider the concrete Markov chain on

$$S = \{0,1\}^N$$

for some positive integer N: from the current state $x = (x_1, \dots, x_N)$, choose an index i uniformly from $\{1, \dots, N\}$, and update x_i to be 0 or 1 with probability 1/2 each, independently of its previous value. All other coordinates remain unchanged.

Let π be the stationary distribution of this Markov chain. Show that for any initial state $x \in S$,

$$\sum_{y\in S} |p_{xy}^{(n)} - \pi_y| \le 2N \left(1 - \frac{1}{N}\right)^n.$$

Answer: Construct a coupling as follows:

$$X_0^{(1)} = x, \qquad X_0^{(2)} \sim \pi.$$

At each step, choose the same coordinate i for both chains, and update the i-th coordinate of both chains to the same new value, 0 or 1, each with probability 1/2.

Then marginally both chains follow the transition matrix P.

The chains have coupled once every coordinate has been updated at least once. So

$$\mathbb{P}(T \ge n) = \mathbb{P}(\text{at least one coordinate is not updated in the first } n \text{ steps}).$$

Using the union bound,

$$\mathbb{P}(T \ge n) \le \sum_{i=1}^{N} \mathbb{P}(\text{the } i\text{-th coordinate is not updated in the first } n \text{ steps}) = N\left(1 - \frac{1}{N}\right)^n.$$

Applying part (1),

$$\sum_{y\in S} |p_{xy}^{(n)} - \pi_y| \le 2\mathbb{P}(T \ge n) \le 2N\left(1 - \frac{1}{N}\right)^n.$$

Rubrics:

- Any other valid construction gets full credit.

- 5 points for constructing the coupling correctly.
- 3 points for computing the tail bound for T.
- If your upper bound is weaker than the desired one, you may get 1 or 2 out of the 3 tail-bound points.
- A partially correct construction gets partial credit.

6. Lecture 5

6.1. An additional Markov chain topic: MCMC

The lecture begins with an additional Markov chain topic: *Markov chain Monte Carlo* (MCMC).

The goal is to sample from a target distribution π on a state space S. For simplicity, assume S is discrete.

Typical motivations are:

- the state space S is extremely large or infinite;
- we only know π up to a normalizing constant, i.e.

$$\pi(x) \propto f(x)$$

  for some known function f.

Algorithmically, the idea is to construct a Markov chain $(X_t)_{t\geq 0}$ with:

- some initial distribution,
- irreducibility,
- aperiodicity,
- stationary distribution π.

Then, under suitable assumptions,

$$\mathbb{P}(X_t = j) \to \pi_j,$$

and one also gets a law of large numbers for sample averages along the chain.

6.2. Metropolis–Hastings algorithm

Start with a proposal distribution

$$q(x, \cdot) \qquad \text{for each } x \in S.$$

Define a new transition kernel by

$$p(x, y) = \min\left\{q(x, y),\ q(y, x)\frac{\pi(y)}{\pi(x)}\right\}, \qquad x, y \in S.$$

Operationally, when $X_t = x$:

1. sample $Y_t \sim q(x, \cdot)$;

2. set

$$X_{t+1} = \begin{cases} Y_t, & \text{with probability } \min\left\{1, \frac{q(Y_t,x)\pi(Y_t)}{q(x,Y_t)\pi(x)}\right\}, \\ X_t, & \text{otherwise.} \end{cases}$$

The key observation is the detailed balance identity:

$$p(x,y)\pi(x) = \min\{q(x,y)\pi(x),\ q(y,x)\pi(y)\} = p(y,x)\pi(y).$$

Thus p is reversible with respect to π, and therefore π is a stationary distribution.

For Metropolis–Hastings,

$$p(x,y)\pi(x) = p(y,x)\pi(y),$$

so the chain is reversible with respect to π.

6.3. Martingales: the main new topic

The lecture then turns to martingales.

Definition 6.1 (Martingale)**.** A stochastic process $(X_n)_{n\geq 0}$ is called a *martingale* if:

(i)

$$\mathbb{E}[|X_n|] < \infty \qquad \text{for all } n,$$

(ii)

$$\mathbb{E}[X_{n+1} \mid X_0, X_1, \ldots, X_n] = X_n \qquad \text{for all } n.$$

A martingale need not be Markov. The conditional distribution of X_{n+1} may depend on the whole past $X_0, \ldots, X_n$; the martingale condition only says that the conditional mean is exactly the current value X_n.

6.4. Basic example: simple random walk

Let

$$X_n = \sum_{i=1}^{n} \varepsilon_i,$$

where ε_i are i.i.d. random variables satisfying

$$\mathbb{P}(\varepsilon_i = 1) = \mathbb{P}(\varepsilon_i = -1) = \frac{1}{2}.$$

Then $(X_n)_{n\geq 0}$ is a martingale.

Indeed,

$$\mathbb{E}[|X_n|] \leq \sum_{i=1}^{n} \mathbb{E}[|\varepsilon_i|] \leq n < \infty,$$

and

$$\mathbb{E}[X_{n+1} \mid X_0, \ldots, X_n] = \mathbb{E}[X_n + \varepsilon_{n+1} \mid X_0, \ldots, X_n] = X_n + \mathbb{E}[\varepsilon_{n+1}] = X_n.$$

More generally, if

$$X_n = \sum_{i=1}^{n} Y_i,$$

where Y_i are i.i.d., $\mathbb{E}[|Y_i|] < \infty$, and $\mathbb{E}[Y_i] = 0$, then (X_n) is a martingale.

6.5. A corrected martingale

For the one-dimensional simple random walk, the process $(X_n^2)_{n\geq 0}$ is not a martingale, but a corrected version is.

Define

$$M_n = X_n^2 - n.$$

The idea is that X_n^2 grows on average like n, so subtracting n removes the drift.

First,

$$\mathbb{E}[M_n] = \mathbb{E}[X_n^2] - n = 0.$$

Also,

$$\mathbb{E}[|M_n|] \leq \mathbb{E}[X_n^2] + n \leq 2n < \infty.$$

Now compute:

$$\mathbb{E}[M_{n+1} \mid X_0, \ldots, X_n] = \mathbb{E}\left[(X_n + \varepsilon_{n+1})^2 - (n+1) \mid X_0, \ldots, X_n\right].$$

Expanding,

$$= X_n^2 + 2X_n\mathbb{E}[\varepsilon_{n+1} \mid X_0, \ldots, X_n] + \mathbb{E}[\varepsilon_{n+1}^2] - (n+1).$$

Since $\mathbb{E}[\varepsilon_{n+1}] = 0$ and $\varepsilon_{n+1}^2 = 1$,

$$\mathbb{E}[M_{n+1} \mid X_0, \ldots, X_n] = X_n^2 + 1 - (n+1) = X_n^2 - n = M_n.$$

So $(M_n)_{n\geq 0}$ is a martingale.

For a one-dimensional symmetric simple random walk,

$$M_n = X_n^2 - n$$

is a martingale.

6.6. Filtrations and notation

Given a stochastic process $(X_n)_{n\geq 0}$, define

$$\mathcal{F}_n = \sigma(X_0, X_1, \ldots, X_n),$$

the information contained in the process up to time n.

We often write

$$\mathbb{E}[X_{n+1} \mid \mathcal{F}_n]$$

as shorthand for

$$\mathbb{E}[X_{n+1} \mid X_0, X_1, \ldots, X_n].$$

A useful fact is that if (X_n) is a martingale, then for $0 \leq m < n$,

$$\mathbb{E}[X_n \mid \mathcal{F}_m] = X_m.$$

In particular, taking $m = 0$,

$$\mathbb{E}[X_n] = \mathbb{E}[X_0].$$

Idea. For example,

$$\mathbb{E}[X_{n+2} \mid X_0, \ldots, X_n] = \mathbb{E}[\mathbb{E}[X_{n+2} \mid X_0, \ldots, X_{n+1}] \mid X_0, \ldots, X_n] = \mathbb{E}[X_{n+1} \mid X_0, \ldots, X_n] = X_n.$$

Then continue by induction. □

6.7. A warning: optional evaluation is subtle

A major theme for the next few lectures is that

$$\mathbb{E}[X_T] \neq \mathbb{E}[X_0]$$

in general if T is a random time depending on the process.

For example, let (X_n) be a simple random walk and define

$$T = \arg\max_{0\leq t\leq 100} X_t.$$

Then one can show

$$\mathbb{E}[X_T] > 0.$$

The problem is that at time 65, say, we do not know whether $T = 65$; we only know the value of T after observing the whole path up to time 100.

So we need a class of random times for which stopping is legitimate.

6.8. Stopping times

Definition 6.2 (Stopping time, discrete time)**.** A nonnegative integer-valued random variable T is called a *stopping time* if for every $n = 0, 1, 2, \ldots$, the event

$$\{T = n\}$$

is determined by $X_0, X_1, \ldots, X_n$, equivalently measurable with respect to $\mathcal{F}_n$.

In continuous time, the corresponding definition is: T is a stopping time if for every $t \geq 0$, the event

$$\{T \leq t\}$$

is determined by $(X_s)_{0 \leq s \leq t}$.

6.9. Examples of stopping times

Examples include:

- any deterministic time;
- hitting times, e.g.
$$T = \inf\{t \geq 0 : X_t = x\},$$
or more generally
$$T = \inf\{t \geq 0 : X_t \in A\};$$
- the k-th visit time to a state x, denoted $T_x^{(k)}$.

An important non-example is

$$T = \inf\{t \geq 2 : X_{t+2} = 5\}.$$

This is not a stopping time, because deciding whether $T = t$ requires information from the future.

If T_1 and T_2 are stopping times, then:

- $\min(T_1, T_2)$ is a stopping time;
- $\max(T_1, T_2)$ is a stopping time;
- $T_1 + T_2$ is a stopping time in discrete time.

But in general:

- $T_1 T_2$ need not be a stopping time;
- $T_1 - T_2$ need not be a stopping time, even if $T_1 \geq T_2$ almost surely.

6.10. Strong Markov property

Recall the strong Markov property for Markov chains.

If $(X_n)_{n\geq 0}$ is a discrete-time Markov chain and T is a stopping time, then conditional on $T = t$ and $X_0, X_1, \ldots, X_t$, the post-T process

$$(X_n)_{n\geq T}$$

behaves like a fresh Markov chain started from X_t.

6.11. Bounded optional stopping lemma

We return to martingales.

A basic non-example is the simple random walk with

$$T = \inf\{t \geq 0 : X_t = 5\}.$$

Since simple random walk is recurrent,

$$\mathbb{P}(T < \infty) = 1.$$

So

$$X_T = 5, \qquad \text{hence} \qquad \mathbb{E}[X_T] = 5 \neq \mathbb{E}[X_0] = 0.$$

The issue is that T is not bounded, and the process can wander very far before stopping.

The easy case is when T is bounded.

Lemma 6.3 (Optional stopping, bounded case)**.** *Let $(X_n)_{n\geq 0}$ be a martingale, and let T be a stopping time such that*

$$\mathbb{P}(T \leq m) = 1$$

for some finite m. Then

$$\mathbb{E}[X_T] = \mathbb{E}[X_0].$$

Proof. Write

$$X_T - X_0 = \sum_{k=1}^{T}(X_k - X_{k-1}) = \sum_{k=1}^{m}(X_k - X_{k-1})\mathbf{1}_{\{k\leq T\}}.$$

Taking expectations,

$$\mathbb{E}[X_T] - \mathbb{E}[X_0] = \sum_{k=1}^{m}\mathbb{E}\big[(X_k - X_{k-1})\mathbf{1}_{\{k\leq T\}}\big].$$

Now $\mathbf{1}_{\{k\leq T\}}$ is determined by $X_0, \ldots, X_{k-1}$, so it is $\mathcal{F}_{k-1}$-measurable. Therefore,

$$\mathbb{E}\big[(X_k - X_{k-1})\mathbf{1}_{\{k\leq T\}}\big] = \mathbb{E}\Big[\mathbf{1}_{\{k\leq T\}}\mathbb{E}[X_k - X_{k-1} \mid \mathcal{F}_{k-1}]\Big] = 0.$$

Summing gives

$$\mathbb{E}[X_T] = \mathbb{E}[X_0].$$

□

6.12. A more general optional stopping theorem

We now relax the boundedness assumption.

Theorem 6.4 (Optional stopping theorem)**.** *Let $(X_n)_{n\geq 0}$ be a martingale, and let T be a stopping time such that*

$$\mathbb{P}(T < \infty) = 1.$$

Assume:

(i)

$$\mathbb{E}[|X_T|] < \infty,$$

(ii)

$$\lim_{n\to\infty} \mathbb{E}\big[|X_n|\mathbf{1}_{\{T>n\}}\big] = 0.$$

Then

$$\mathbb{E}[X_T] = \mathbb{E}[X_0].$$

A useful corollary is the following: if $\mathbb{P}(T < \infty) = 1$ and there exists $B > 0$ such that

$$\mathbb{P}\big(|X_n| \leq B \text{ for all } n = 0, 1, \ldots, T\big) = 1,$$

then OST holds.

Indeed:

- $|X_T| \leq B$, so $\mathbb{E}[|X_T|] < \infty$;
- $$\mathbb{E}[|X_n|\mathbf{1}_{\{T>n\}}] \leq B\,\mathbb{P}(T > n) \to 0$$

  since $\mathbb{P}(T < \infty) = 1$.

6.13. Proof idea of the general OST

Define

$$T_m = \min(T, m).$$

Then T_m is a bounded stopping time, so by the bounded lemma,

$$\mathbb{E}[X_{T_m}] = \mathbb{E}[X_0] \qquad \text{for every } m.$$

Now decompose:

$$X_{T_m} = X_T\mathbf{1}_{\{T\leq m\}} + X_m\mathbf{1}_{\{T>m\}},$$

while

$$X_T = X_T \mathbf{1}_{\{T \le m\}} + X_T \mathbf{1}_{\{T > m\}}.$$

Hence

$$|\mathbb{E}[X_{T_m}] - \mathbb{E}[X_T]| \le \mathbb{E}[|X_m| \mathbf{1}_{\{T>m\}}] + \mathbb{E}[|X_T| \mathbf{1}_{\{T>m\}}].$$

The first term tends to 0 by assumption (ii). The second tends to 0 by dominated convergence, since $|X_T|$ is integrable and $\mathbf{1}_{\{T>m\}} \to 0$ almost surely.

Therefore

$$\mathbb{E}[X_{T_m}] \to \mathbb{E}[X_T].$$

Since $\mathbb{E}[X_{T_m}] = \mathbb{E}[X_0]$ for every m, we conclude

$$\mathbb{E}[X_T] = \mathbb{E}[X_0].$$

6.14. Application: gambler's ruin

Consider the simple random walk

$$X_{n+1} = X_n + \varepsilon_{n+1},$$

where

$$\varepsilon_{n+1} = \begin{cases} 1, & \text{with probability } \frac{1}{2}, \\ -1, & \text{with probability } \frac{1}{2}. \end{cases}$$

Let

$$X_0 = a \in [0, c],$$

and define the hitting time

$$T = \inf\{n \ge 0 : X_n \in \{0, c\}\}.$$

6.15. Symmetric case

Since (X_n) is a martingale and $|X_n| \le c$ up to time T, OST applies:

$$\mathbb{E}[X_T] = \mathbb{E}[X_0] = a.$$

But

$$X_T = \begin{cases} c, & \text{if } X_T = c, \\ 0, & \text{if } X_T = 0. \end{cases}$$

So

$$a = \mathbb{E}[X_T] = c\,\mathbb{P}(X_T = c) + 0 \cdot \mathbb{P}(X_T = 0).$$

Hence

$$\mathbb{P}(X_T = c) = \frac{a}{c}.$$

For symmetric gambler's ruin,

$$\mathbb{P}_a(\text{hit } c \text{ before } 0) = \frac{a}{c}.$$

6.16. Asymmetric case

Now suppose

$$\varepsilon_n = \begin{cases} 1, & \text{with probability } p, \\ -1, & \text{with probability } 1-p, \end{cases} \qquad p \neq \frac{1}{2}.$$

Construct the process

$$Y_n = \left(\frac{1-p}{p}\right)^{X_n}.$$

It is straightforward to verify that (Y_n) is a martingale.

Since $X_n \in [0, c]$ up to time T, we have

$$|Y_n| \leq \max\left\{1, \left(\frac{1-p}{p}\right)^c\right\} \qquad \text{up to time } T,$$

so OST applies:

$$\mathbb{E}[Y_T] = \mathbb{E}[Y_0] = \left(\frac{1-p}{p}\right)^a.$$

But

$$Y_T = \left(\frac{1-p}{p}\right)^c \mathbf{1}_{\{X_T=c\}} + 1 \cdot \mathbf{1}_{\{X_T=0\}}.$$

So

$$\left(\frac{1-p}{p}\right)^a = \left(\frac{1-p}{p}\right)^c \mathbb{P}(X_T = c) + \mathbb{P}(X_T = 0).$$

Using

$$\mathbb{P}(X_T = 0) = 1 - \mathbb{P}(X_T = c),$$

we solve for $\mathbb{P}(X_T = c)$:

$$\mathbb{P}(X_T = c) = \frac{1 - \left(\frac{1-p}{p}\right)^a}{1 - \left(\frac{1-p}{p}\right)^c}.$$

For asymmetric gambler's ruin with $p \neq \frac{1}{2}$,

$$\mathbb{P}_a(\text{hit } c \text{ before } 0) = \frac{1 - \left(\frac{1-p}{p}\right)^a}{1 - \left(\frac{1-p}{p}\right)^c}.$$

6.17. Summary

Lecture 5 has two main parts.
First, it introduces **MCMC**, especially the **Metropolis–Hastings algorithm**, and explains why reversibility gives the desired stationary distribution.
Second, it begins the study of **martingales**, including:

- the definition of a martingale,
- basic martingale examples such as simple random walk and $X_n^2 - n$,
- filtrations and conditional expectation notation,
- stopping times,
- the bounded optional stopping lemma,
- a more general optional stopping theorem,
- and applications to **gambler's ruin**.

7. Lecture 6(a)

7.1. Intuition: martingales as "fair games"

A central idea in this lecture is the notion of a *fair gambling process*. If we think of X_n as the amount of money we have after round n, then the process is called a martingale if, given all information up to time n, the expected amount at the next round is exactly the current amount.

So the game may fluctuate randomly, but on average there is no built-in drift upward or downward.

7.2. Filtration and information available up to time n

To formalize the phrase "given the past," we use a filtration. For a process $(X_n)_{n\geq 0}$, define

$$\mathcal{F}_n := \sigma(X_0, X_1, \ldots, X_n).$$

This is the sigma-field generated by the observations up to time n. Informally, $\mathcal{F}_n$ represents all information available by time n.

When the notes write things like

$$\mathbb{E}[X_{n+1} \mid X_0, \ldots, X_n],$$

this is the same as writing

$$\mathbb{E}[X_{n+1} \mid \mathcal{F}_n].$$

7.3. Definition of a martingale

Definition 7.1 (Martingale)**.** A real-valued stochastic process $(X_n)_{n\geq 0}$ adapted to $(\mathcal{F}_n)_{n\geq 0}$ is called a *martingale* if for every $n \geq 0$,

(i) $\mathbb{E}[|X_n|] < \infty$, and

(ii)
$$\mathbb{E}[X_{n+1} \mid \mathcal{F}_n] = X_n.$$

So a martingale is exactly a process whose conditional expected next value equals its current value.

The martingale property is

$$\mathbb{E}[X_{n+1} \mid \mathcal{F}_n] = X_n.$$

Interpretation: after seeing the entire history up to time n, the game is still fair.

7.4. First examples of martingales

Example 7.2 (Simple random walk)**.** Let

$$X_n = \sum_{i=1}^{n} Z_i, \qquad X_0 = 0,$$

where the increments Z_i are i.i.d. with

$$\mathbb{P}(Z_i = 1) = \mathbb{P}(Z_i = -1) = \frac{1}{2}.$$

Then (X_n) is the symmetric simple random walk on $\mathbb{Z}$.

Since

$$X_{n+1} = X_n + Z_{n+1}$$

and Z_{n+1} is independent of $\mathcal{F}_n$ with mean zero, we get

$$\mathbb{E}[X_{n+1} \mid \mathcal{F}_n] = \mathbb{E}[X_n + Z_{n+1} \mid \mathcal{F}_n] = X_n + \mathbb{E}[Z_{n+1}] = X_n.$$

Hence (X_n) is a martingale.

Example 7.3 (Partial sums of mean-zero i.i.d. variables)**.** More generally, if $(Y_i)_{i\geq 1}$ are i.i.d. random variables satisfying

$$\mathbb{E}[|Y_1|] < \infty, \qquad \mathbb{E}[Y_1] = 0,$$

and we define

$$X_n := \sum_{i=1}^{n} Y_i, \qquad X_0 = 0,$$

then (X_n) is a martingale.

Indeed,

$$\mathbb{E}[X_{n+1} \mid \mathcal{F}_n] = \mathbb{E}[X_n + Y_{n+1} \mid \mathcal{F}_n] = X_n + \mathbb{E}[Y_{n+1}] = X_n.$$

The message is: sums of independent mean-zero increments naturally produce martingales.

7.5. A useful derived martingale: $X_n^2 - n$

For the symmetric simple random walk, the process (X_n^2) itself is *not* a martingale, but it becomes one after subtracting a deterministic correction term.

Let (X_n) be the simple random walk, so that

$$X_{n+1} = X_n + Z_{n+1}, \qquad Z_{n+1} \in \{-1, 1\}, \qquad \mathbb{E}[Z_{n+1}] = 0.$$

Then

$$X_{n+1}^2 = (X_n + Z_{n+1})^2 = X_n^2 + 2X_n Z_{n+1} + Z_{n+1}^2.$$

Conditioning on $\mathcal{F}_n$,

$$\mathbb{E}[X_{n+1}^2 \mid \mathcal{F}_n] = X_n^2 + 2X_n\mathbb{E}[Z_{n+1} \mid \mathcal{F}_n] + \mathbb{E}[Z_{n+1}^2 \mid \mathcal{F}_n].$$

Because Z_{n+1} is independent of $\mathcal{F}_n$, has mean zero, and satisfies $Z_{n+1}^2 = 1$, this becomes

$$\mathbb{E}[X_{n+1}^2 \mid \mathcal{F}_n] = X_n^2 + 1.$$

Therefore

$$\mathbb{E}[X_{n+1}^2 - (n+1) \mid \mathcal{F}_n] = X_n^2 - n.$$

So we obtain the following.

Proposition 7.4. *If (X_n) is a symmetric simple random walk, then*

$$M_n := X_n^2 - n$$

is a martingale.

This is one of the most important examples in the lecture, because it will later be combined with optional stopping to compute expected hitting times.

7.6. Conditioning further back in time

The martingale property is usually stated one step at a time, but it automatically implies a more general identity.

Proposition 7.5. *If (X_n) is a martingale, then for every $0 \le m < n$,*

$$\mathbb{E}[X_n \mid \mathcal{F}_m] = X_m.$$

Proof. Apply the tower property repeatedly:

$$\mathbb{E}[X_n \mid \mathcal{F}_m] = \mathbb{E}\big[\mathbb{E}[X_n \mid \mathcal{F}_{n-1}] \mid \mathcal{F}_m\big] = \mathbb{E}[X_{n-1} \mid \mathcal{F}_m].$$

Continuing backward one step at a time gives

$$\mathbb{E}[X_n \mid \mathcal{F}_m] = X_m.$$

□

So once a process is a martingale, its conditional expectation at any future time, given present information, is just the current value.

7.7. Stopping times

The next topic is random times at which we decide to stop observing the process. The key point is that the decision to stop must depend only on information available *up to that time*.

Definition 7.6 (Stopping time)**.** A nonnegative integer-valued random variable T is called a *stopping time* with respect to $(\mathcal{F}_n)$ if for every $n \geq 0$,

$$\{T = n\} \in \mathcal{F}_n.$$

Equivalently, for every $n \geq 0$, the event

$$\{T \leq n\} \in \mathcal{F}_n.$$

In words: by time n, we can determine whether stopping has already occurred.

Remark 7.7. A stopping time is about whether we know *now* that stopping has happened. We are not allowed to look into the future.

7.8. Examples and a non-example

Assume (X_n) is a process and $\mathcal{F}_n = \sigma(X_0, \ldots, X_n)$.

Example 7.8 (Deterministic time)**.** For any fixed constant $c \in \mathbb{N} \cup \{0\}$, the time

$$T \equiv c$$

is a stopping time.

This simply means: stop after the c-th round.

Example 7.9 (Hitting times)**.** The following are stopping times:

$$T = \inf\{t \geq 0 : X_t = 5\}, \qquad T = \inf\{t \geq 0 : |X_t| \geq 5\}.$$

To decide whether $T \leq n$, we only need to inspect the path $X_0, \ldots, X_n$.

Example 7.10 (Visit times)**.** If $T_i^{(k)}$ denotes the time of the k-th visit to state i, then $T_i^{(k)}$ is also a stopping time.

Example 7.11 (A shifted hitting time)**.** The time

$$T = \inf\{t \geq 0 : X_{t+2} = 5\}$$

is *not* a stopping time. To know whether $T = n$, we would need information about X_{n+2}, which is not available at time n.

So the distinction is simple but important: stopping times are based on the past and present, not the future.

7.9. Basic operations on stopping times

If T_1 and T_2 are stopping times, then the following are again stopping times:

$$\min(T_1, T_2), \qquad \max(T_1, T_2), \qquad T_1 + T_2.$$

In discrete time, one may also check that products such as T_1T_2 are stopping times.

However, even if $T_1 \geq T_2$, the difference

$$T_1 - T_2$$

need *not* be a stopping time in general.

So stopping times are stable under some natural operations, but not under all algebraic manipulations.

7.10. Why optional stopping is not automatically true

A first guess might be:

> If (X_n) is a martingale and T is a stopping time, then perhaps $\mathbb{E}[X_T] = \mathbb{E}[X_0]$.

This is the optional stopping principle. But it is *not* always true without extra assumptions.

Example 7.12 (Counterexample)**.** Let (X_n) be a symmetric simple random walk starting from 0, and define

$$T := \inf\{t \geq 0 : X_t = 5\}.$$

Since simple random walk on $\mathbb{Z}$ is recurrent,

$$\mathbb{P}(T < \infty) = 1.$$

But by definition,

$$X_T = 5 \qquad \text{a.s.}$$

Therefore

$$\mathbb{E}[X_T] = 5 \neq 0 = \mathbb{E}[X_0].$$

So optional stopping fails in this case.

This shows that some additional structure is needed.

7.11. Optional stopping in the bounded-time case

The easiest valid version is the case where the stopping time is bounded by a deterministic constant.

Lemma 7.13 (Optional stopping for bounded stopping times)**.** *Let $(X_n)_{n\geq 0}$ be a martingale, and let T be a stopping time such that*

$$\mathbb{P}(T \leq m) = 1$$

for some deterministic constant $m \geq 0$. Then

$$\mathbb{E}[X_T] = \mathbb{E}[X_0].$$

Proof. Since $T \leq m$ almost surely,

$$X_T - X_0 = \sum_{k=1}^{m} (X_k - X_{k-1}) \mathbf{1}_{\{k \leq T\}}.$$

Taking expectations,

$$\mathbb{E}[X_T] - \mathbb{E}[X_0] = \sum_{k=1}^{m} \mathbb{E}\big[(X_k - X_{k-1})\mathbf{1}_{\{k \le T\}}\big].$$

Now note that

$$\{k \le T\} = \{T \ge k\} = \{T \le k-1\}^c \in \mathcal{F}_{k-1},$$

so $\mathbf{1}_{\{k \le T\}}$ is $\mathcal{F}_{k-1}$-measurable. Hence

$$\mathbb{E}\big[(X_k - X_{k-1})\mathbf{1}_{\{k \le T\}}\big] = \mathbb{E}\Big[\mathbf{1}_{\{k \le T\}}\, \mathbb{E}[X_k - X_{k-1} \mid \mathcal{F}_{k-1}]\Big].$$

Because (X_n) is a martingale,

$$\mathbb{E}[X_k - X_{k-1} \mid \mathcal{F}_{k-1}] = 0.$$

So each summand is zero, and therefore

$$\mathbb{E}[X_T] = \mathbb{E}[X_0].$$

□

The idea is elegant: stop the telescoping sum at a bounded horizon, and use the fact that the indicator of "not yet stopped" is known one step before the increment occurs.

7.12. A more general optional stopping theorem

The lecture then proves a more flexible version by truncating the stopping time.

Theorem 7.14 (Optional stopping theorem)**.** *Let $(X_n)_{n \ge 0}$ be a martingale and let T be a stopping time such that:*

(i) $\mathbb{P}(T < \infty) = 1$*;*

(ii) $\mathbb{E}[|X_T|] < \infty$*;*

(iii)

$$\lim_{n \to \infty} \mathbb{E}\big[|X_n| \mathbf{1}_{\{T > n\}}\big] = 0.$$

Then

$$\mathbb{E}[X_T] = \mathbb{E}[X_0].$$

Idea of proof by truncation. For each $m \ge 0$, define the truncated stopping time

$$T_m := \min(T, m) = T \wedge m.$$

Then $T_m \le m$ almost surely, so by the bounded-time lemma,

$$\mathbb{E}[X_{T_m}] = \mathbb{E}[X_0].$$

Thus it remains to show that $X_{T_m} \to X_T$ in L^1.

Now split according to whether $T \le m$ or $T > m$:

$$X_{T_m} = X_T \mathbf{1}_{\{T \le m\}} + X_m \mathbf{1}_{\{T > m\}},$$

while

$$X_T = X_T \mathbf{1}_{\{T \le m\}} + X_T \mathbf{1}_{\{T > m\}}.$$

Therefore

$$X_{T_m} - X_T = (X_m - X_T)\mathbf{1}_{\{T > m\}},$$

and hence

$$\mathbb{E}[|X_{T_m} - X_T|] \le \mathbb{E}[|X_m|\mathbf{1}_{\{T>m\}}] + \mathbb{E}[|X_T|\mathbf{1}_{\{T>m\}}].$$

The first term tends to 0 by assumption (iii).

For the second term, because $\mathbb{P}(T < \infty) = 1$, we have

$$\mathbf{1}_{\{T>m\}} \to 0 \qquad \text{a.s.}$$

as $m \to \infty$. Since $|X_T|$ is integrable by assumption (ii), the dominated convergence theorem gives

$$\mathbb{E}[|X_T|\mathbf{1}_{\{T>m\}}] \to 0.$$

Thus

$$\mathbb{E}[|X_{T_m} - X_T|] \to 0.$$

So $X_{T_m} \to X_T$ in L^1, and consequently

$$\mathbb{E}[X_T] = \lim_{m\to\infty} \mathbb{E}[X_{T_m}] = \mathbb{E}[X_0].$$

□

7.13. A very useful special case

The theorem becomes easy to apply when the process is uniformly bounded before the stopping time.

Proposition 7.15 (A useful bounded-before-stopping criterion)**.** *Let (X_n) be a martingale and let T be a stopping time such that*

$$\mathbb{P}(T < \infty) = 1.$$

Assume there exists a constant $C < \infty$ such that for all $n < T$,

$$|X_n| \le C.$$

Then

$$\mathbb{E}[X_T] = \mathbb{E}[X_0].$$

Proof. On $\{T > n\}$ we have $n < T$, so

$$|X_n|\mathbf{1}_{\{T>n\}} \le C\mathbf{1}_{\{T>n\}}.$$

Hence

$$\mathbb{E}[|X_n|\mathbf{1}_{\{T>n\}}] \le C\,\mathbb{P}(T > n) \to 0,$$

because $\mathbb{P}(T < \infty) = 1$. Also,

$$|X_T| \le C$$

in the hitting-time examples treated below, so X_T is integrable. Thus the theorem applies. □

This bounded-before-stopping criterion is exactly what we need for gambler's ruin.

7.14. Gambler's ruin revisited: symmetric case

Consider the simple random walk

$$X_{n+1} = X_n + \varepsilon_{n+1}, \qquad \mathbb{P}(\varepsilon_{n+1} = 1) = \mathbb{P}(\varepsilon_{n+1} = -1) = \frac{1}{2},$$

with starting point

$$X_0 = a, \qquad 0 < a < c.$$

Define the stopping time

$$T := \inf\{t \ge 0 : X_t = 0 \text{ or } X_t = c\}.$$

So T is the first time the walk hits either boundary 0 or c.

Because the state space between the boundaries is finite, $T < \infty$ almost surely. Also, for every $n < T$,

$$0 < X_n < c, \qquad \text{hence in particular } |X_n| \le c.$$

So optional stopping applies to the martingale (X_n):

$$\mathbb{E}[X_T] = \mathbb{E}[X_0] = a.$$

But at time T, the process must be at one of the two endpoints, so

$$X_T \in \{0, c\}.$$

Therefore

$$\mathbb{E}[X_T] = 0 \cdot \mathbb{P}(X_T = 0) + c \cdot \mathbb{P}(X_T = c) = c\,\mathbb{P}(X_T = c).$$

Comparing with $\mathbb{E}[X_T] = a$, we get:

Proposition 7.16 (Symmetric gambler's ruin probability)**.** *For symmetric gambler's ruin,*

$$\mathbb{P}(X_T = c) = \frac{a}{c}, \qquad \mathbb{P}(X_T = 0) = 1 - \frac{a}{c} = \frac{c-a}{c}.$$

So in the symmetric case, the probability of reaching the upper boundary is just the starting

position divided by the interval length.

7.15. Gambler's ruin revisited: asymmetric case

Now suppose

$$\mathbb{P}(\varepsilon_{n+1} = 1) = p, \qquad \mathbb{P}(\varepsilon_{n+1} = -1) = 1 - p, \qquad p \neq \frac{1}{2}.$$

The process (X_n) is no longer a martingale. So we need to construct a new martingale.

Set

$$r := \frac{1-p}{p}, \qquad Y_n := r^{X_n}.$$

Then

$$Y_{n+1} = r^{X_n + \varepsilon_{n+1}} = r^{X_n} r^{\varepsilon_{n+1}}.$$

Conditioning on $\mathcal{F}_n$,

$$\mathbb{E}[Y_{n+1} \mid \mathcal{F}_n] = r^{X_n}\big(pr + (1-p)r^{-1}\big).$$

Since $r = (1-p)/p$,

$$pr + (1-p)r^{-1} = p \cdot \frac{1-p}{p} + (1-p) \cdot \frac{p}{1-p} = 1.$$

Hence

$$\mathbb{E}[Y_{n+1} \mid \mathcal{F}_n] = r^{X_n} = Y_n.$$

So (Y_n) is a martingale.

Up to time T, the walk stays inside $[0, c]$, so

$$|Y_n| = r^{X_n} \leq \max(1, r^c) \qquad \text{for } n < T.$$

Therefore optional stopping applies:

$$\mathbb{E}[Y_T] = \mathbb{E}[Y_0] = r^a.$$

Since $X_T \in \{0, c\}$, we obtain

$$r^a = r^c\, \mathbb{P}(X_T = c) + 1 \cdot \mathbb{P}(X_T = 0).$$

Using

$$\mathbb{P}(X_T = 0) = 1 - \mathbb{P}(X_T = c),$$

we solve for the upper-boundary probability.

Proposition 7.17 (Asymmetric gambler's ruin probability)**.** *If $p \neq \frac{1}{2}$, then with $r = (1-p)/p$,*

$$\mathbb{P}(X_T = c) = \frac{r^a - 1}{r^c - 1}.$$

Equivalently,

$$\mathbb{P}(X_T = 0) = \frac{r^c - r^a}{r^c - 1}.$$

When $p = \frac{1}{2}$, we recover the symmetric formula a/c.

7.16. Expected duration of gambler's ruin

The next question is: how long does the game last on average in the symmetric case?

Return to the symmetric walk and the stopping time

$$T := \inf\{t \geq 0 : X_t = 0 \text{ or } X_t = c\}, \qquad X_0 = a.$$

We already know that

$$M_n := X_n^2 - n$$

is a martingale.

If we apply optional stopping to (M_n), we get

$$\mathbb{E}[M_T] = \mathbb{E}[M_0] = a^2.$$

That is,

$$a^2 = \mathbb{E}[X_T^2 - T] = \mathbb{E}[X_T^2] - \mathbb{E}[T].$$

Now $X_T \in \{0, c\}$, so

$$X_T^2 = c^2 \mathbf{1}_{\{X_T = c\}}.$$

Therefore

$$\mathbb{E}[X_T^2] = c^2 \mathbb{P}(X_T = c) = c^2 \cdot \frac{a}{c} = ac.$$

Substituting into the previous identity yields

$$a^2 = ac - \mathbb{E}[T].$$

So:

Proposition 7.18 (Expected duration of symmetric gambler's ruin)**.** *For the symmetric walk started at $a \in \{0, 1, \ldots, c\}$,*

$$\mathbb{E}[T] = a(c - a).$$

Remark 7.19. To justify this application of optional stopping carefully, one checks that the assumptions of the theorem hold for the martingale $M_n = X_n^2 - n$. The main point is that in gambler's ruin the hitting time T has finite expectation, and on $\{T > n\}$ we have

$$|M_n| = |X_n^2 - n| \leq c^2 + n.$$

Then

$$\mathbb{E}[|M_n| \mathbf{1}_{\{T > n\}}] \leq c^2 \mathbb{P}(T > n) + \mathbb{E}[T \mathbf{1}_{\{T > n\}}] \to 0,$$

which is enough for optional stopping.

7.17. What this lecture is really teaching

Lecture 6 introduces a standard strategy that appears throughout probability:

1. identify a martingale;
2. choose a meaningful stopping time;
3. verify optional stopping can be applied;
4. read off probabilities or expectations from the stopped value.

This method turns conditional-expectation identities into concrete formulas for hitting probabilities and expected stopping times.

The core workflow is:

$$\text{martingale} + \text{stopping time} + \text{OST} \Longrightarrow \text{explicit information about the process.}$$

In Lecture 6, this is used to solve gambler's ruin.

7.18. Summary

Lecture 6 develops the martingale-and-stopping-time toolkit.
Main points:

- A martingale satisfies
$$\mathbb{E}[X_{n+1} \mid \mathcal{F}_n] = X_n.$$
- Sums of i.i.d. mean-zero increments are martingales.
- For simple random walk, $X_n^2 - n$ is also a martingale.
- A stopping time is a random time determined only by present and past information.
- Optional stopping is *not* automatic; it needs hypotheses.
- If T is bounded, then
$$\mathbb{E}[X_T] = \mathbb{E}[X_0].$$
- A more general optional stopping theorem follows by truncation.
- Applying OST to gambler's ruin gives:
$$\mathbb{P}(X_T = c) = \frac{a}{c} \quad \text{in the symmetric case,}$$
and in the asymmetric case,
$$\mathbb{P}(X_T = c) = \frac{r^a - 1}{r^c - 1}, \qquad r = \frac{1-p}{p}.$$
- Applying OST to $X_n^2 - n$ yields the expected duration formula
$$\mathbb{E}[T] = a(c-a)$$
for symmetric gambler's ruin.

8. Lecture 6(b)

8.1. Recall: the optional stopping theorem

We begin by recalling the discrete-time optional stopping theorem from the previous lecture.

Theorem 8.1 (Optional stopping theorem)**.** *Let $(X_n)_{n\geq 0}$ be a martingale and let T be a stopping time. Assume:*

(i)
$$\mathbb{E}[|X_T|] < \infty;$$

(ii)
$$\mathbb{E}\big[|X_n|\mathbf{1}_{\{T>n\}}\big] \to 0 \qquad \text{as } n \to \infty.$$

Then
$$\mathbb{E}[X_T] = \mathbb{E}[X_0].$$

Two useful special cases are worth remembering:

- if T is bounded, then OST is easy to apply;
- if the stopped martingale is uniformly bounded, then the tail condition is automatic.

Lecture 7 starts by revisiting this theorem and showing how to verify the tail condition in situations where neither of these easy special cases applies.

8.2. Application: expected duration in gambler's ruin

Consider the symmetric gambler's ruin chain on
$$\{0, 1, 2, \ldots, c\},$$
started from
$$X_0 = a, \qquad 0 < a < c,$$
and let
$$T = \inf\{n \geq 0 : X_n \in \{0, c\}\}$$
be the absorption time.

From the previous lecture we already know two facts:

- (X_n) is a martingale;
- in the symmetric case,
$$M_n := X_n^2 - n$$
is also a martingale.

If OST applies to (M_n) at time T, then

$$\mathbb{E}[M_T] = \mathbb{E}[M_0].$$

Since $X_T \in \{0, c\}$, we get

$$\mathbb{E}[X_T^2] - \mathbb{E}[T] = a^2.$$

Also,

$$\mathbb{P}(X_T = c) = \frac{a}{c}, \qquad \mathbb{P}(X_T = 0) = 1 - \frac{a}{c},$$

so

$$\mathbb{E}[X_T^2] = c^2 \cdot \frac{a}{c} = ac.$$

Therefore,

$$\mathbb{E}[T] = ac - a^2 = a(c - a).$$

For symmetric gambler's ruin started from $a \in \{1, \ldots, c-1\}$,

$$\mathbb{E}[T] = a(c - a).$$

So the only real issue is to justify OST carefully.

8.3. Why the easy OST cases do not apply here

For the martingale

$$M_n = X_n^2 - n,$$

we would like to use OST at the terminal time T.

However:

- the stopping time T is not obviously bounded;
- the martingale (M_n) is not uniformly bounded, because of the $-n$ term.

So neither of the standard quick checks works. We must go back to the original tail condition

$$\mathbb{E}\big[|M_n| \mathbf{1}_{\{T>n\}}\big] \to 0.$$

8.4. Checking the OST tail condition directly

On the event $\{T > n\}$, the walk has not yet hit 0 or c, so

$$0 \le X_n \le c.$$

Hence

$$|M_n| = |X_n^2 - n| \le c^2 + n \qquad \text{on } \{T > n\}.$$

Therefore

$$\mathbb{E}\big[|M_n|\mathbf{1}_{\{T>n\}}\big] \le (c^2+n)\,\mathbb{P}(T>n).$$

So it is enough to show that

$$(c^2+n)\mathbb{P}(T>n) \to 0.$$

A mere proof that $\mathbb{P}(T>n) \to 0$ is not enough; we need a quantitative decay rate, roughly faster than $1/n$.

8.5. Exponential tail bound for hitting times on a finite state space

The lecture proves a more general fact for finite-state Markov chains.

Proposition 8.2 (Exponential tail bound for hitting times)**.** *Let (X_n) be a Markov chain on a finite state space S, and let $A \subseteq S$ be a target set. Suppose that from every starting state $i \in S$, the chain can hit A with positive probability in finitely many steps. If*

$$T_A = \inf\{n \ge 0 : X_n \in A\},$$

then there exist constants $C > 0$ and $\rho \in (0,1)$ such that

$$\mathbb{P}_i(T_A > n) \le C\rho^n \qquad \text{for all } n \ge 0 \text{ and all } i \in S.$$

Idea from the notes. For each state $i \in S$, choose an integer $n_i \ge 1$ such that

$$q_i := \mathbb{P}_i(T_A \le n_i) > 0.$$

Because S is finite, we may define

$$n := \max_{i\in S} n_i, \qquad q := \min_{i\in S} q_i > 0.$$

Then starting from any state i,

$$\mathbb{P}_i(T_A \le n) \ge q.$$

Equivalently,

$$\mathbb{P}_i(T_A > n) \le 1-q.$$

Now split time into blocks of length n. After each unsuccessful block, regardless of the current state, the chance of success in the next block is still at least q. Therefore

$$\mathbb{P}_i(T_A > mn) \le (1-q)^m \qquad (m \ge 1).$$

This gives exponential decay on the subsequence mn, and hence also for every integer time after adjusting the constants. □

For gambler's ruin, the state space is finite, so this proposition applies to the absorption time T. Thus

$$\mathbb{P}(T>n) \le C\rho^n \qquad \text{for some } \rho \in (0,1).$$

8.6. Completing the OST check for gambler's ruin

Using the exponential tail bound,

$$\mathbb{E}\big[|M_n|\mathbf{1}_{\{T>n\}}\big] \le (c^2+n)\mathbb{P}(T>n) \le (c^2+n)C\rho^n \to 0.$$

Since also $\mathbb{E}[|M_T|] < \infty$, the optional stopping theorem applies, and we conclude again that

$$\mathbb{E}[T] = a(c-a).$$

So the lecture's first message is that OST is extremely powerful, but it must be justified with care.

8.7. Motivation for uniform integrability

The tail condition in OST has the form

$$\mathbb{E}\big[|X_n|\mathbf{1}_{\{T>n\}}\big] \to 0.$$

This resembles a basic probability fact for a *single* integrable random variable X: if A_n is a sequence of events with

$$\mathbb{P}(A_n) \to 0 \qquad \text{and} \qquad \mathbb{E}[|X|] < \infty,$$

then

$$\mathbb{E}\big[|X|\mathbf{1}_{A_n}\big] \to 0.$$

The lecture asks for a version of this principle that works *uniformly* over a whole sequence (X_n). This leads to the notion of uniform integrability.

8.8. Definition of uniform integrability

Definition 8.3 (Uniform integrability)**.** A sequence of integrable random variables $(X_n)_{n\ge 0}$ is called *uniformly integrable* if for every $\varepsilon > 0$ there exists $K > 0$ such that

$$\mathbb{E}\big[|X_n|\mathbf{1}_{\{|X_n|>K\}}\big] \le \varepsilon \qquad \text{for all } n.$$

The important point is that the same cutoff K must work for *every* n.

Remark 8.4. Uniform integrability is much stronger than the statement that for each fixed n,

$$\mathbb{E}\big[|X_n|\mathbf{1}_{\{|X_n|>K\}}\big] \to 0 \qquad \text{as } K \to \infty.$$

That latter fact is automatic for a single integrable random variable. Uniform integrability asks for a bound that is simultaneous in n.

8.9. Uniform integrability gives the OST tail condition

Theorem 8.5. *Let $(X_n)_{n\geq 0}$ be a uniformly integrable sequence, and let T be a stopping time such that*

$$\mathbb{P}(T < \infty) = 1 \qquad \text{and} \qquad \mathbb{E}[|X_T|] < \infty.$$

Then

$$\mathbb{E}\big[|X_n|\mathbf{1}_{\{T>n\}}\big] \to 0.$$

Consequently, if (X_n) is a martingale, then the OST tail condition is satisfied.

Proof. Let

$$A_n := \{T > n\}.$$

Then $\mathbb{P}(A_n) \to 0$ because $T < \infty$ almost surely.

Fix $\varepsilon > 0$. By uniform integrability, choose $K = K_\varepsilon$ such that

$$\mathbb{E}\big[|X_n|\mathbf{1}_{\{|X_n|>K\}}\big] \leq \varepsilon \qquad \text{for all } n.$$

Now split according to whether $|X_n| \leq K$ or $|X_n| > K$:

$$\mathbb{E}\big[|X_n|\mathbf{1}_{A_n}\big] = \mathbb{E}\big[|X_n|\mathbf{1}_{A_n\cap\{|X_n|\leq K\}}\big] + \mathbb{E}\big[|X_n|\mathbf{1}_{A_n\cap\{|X_n|>K\}}\big].$$

Hence

$$\mathbb{E}\big[|X_n|\mathbf{1}_{A_n}\big] \leq K\mathbb{P}(A_n) + \mathbb{E}\big[|X_n|\mathbf{1}_{\{|X_n|>K\}}\big] \leq K\mathbb{P}(A_n) + \varepsilon.$$

Taking $n \to \infty$, we obtain

$$\limsup_{n\to\infty} \mathbb{E}\big[|X_n|\mathbf{1}_{A_n}\big] \leq \varepsilon.$$

Since $\varepsilon > 0$ was arbitrary, the limit is 0. □

Remark 8.6. In applications to optional stopping, it is enough to know that the stopped family

$$(X_{n\wedge T})_{n\geq 0}$$

is uniformly integrable.

8.10. A very useful sufficient condition: uniform L^2-bounds

Corollary 8.7. If there exists a constant $C < \infty$ such that

$$\mathbb{E}[|X_n|^2] \leq C \qquad \text{for all } n,$$

then (X_n) is uniformly integrable.

Proof. For any $K > 0$, Cauchy–Schwarz gives

$$\mathbb{E}\big[|X_n|\mathbf{1}_{\{|X_n|>K\}}\big] \leq \sqrt{\mathbb{E}[X_n^2]}\sqrt{\mathbb{P}(|X_n| > K)}.$$

By Markov's inequality applied to X_n^2,

$$\mathbb{P}(|X_n| > K) \le \frac{\mathbb{E}[X_n^2]}{K^2} \le \frac{C}{K^2}.$$

Therefore

$$\mathbb{E}\big[|X_n|\mathbf{1}_{\{|X_n|>K\}}\big] \le \sqrt{C}\sqrt{\frac{C}{K^2}} = \frac{C}{K}.$$

Since the right-hand side does not depend on n, we can make it smaller than any prescribed $\varepsilon > 0$ by choosing K large enough. So (X_n) is uniformly integrable. □

Remark 8.8. A first-moment bound alone is *not* enough to imply uniform integrability. The lecture specifically warns about this.

8.11. Example and non-example

A useful example is

$$X_n = \sum_{j=1}^{n} \frac{1}{j} Z_j,$$

where Z_j are i.i.d. random variables taking values ± 1 with probability $1/2$ each. Then

$$\mathbb{E}[X_n^2] = \sum_{j=1}^{n} \frac{1}{j^2} \le \sum_{j=1}^{\infty} \frac{1}{j^2} = \frac{\pi^2}{6} < \infty.$$

So (X_n) is uniformly integrable.

The notes also give a non-example. Let (S_n) be the one-dimensional symmetric simple random walk, let

$$T = \inf\{n \ge 0 : S_n = -1\},$$

and define

$$Y_n = 1 + S_{n\wedge T}.$$

Then (Y_n) is a nonnegative martingale with

$$\mathbb{E}[Y_n] = \mathbb{E}[Y_0] = 1,$$

but it is *not* uniformly integrable. This example will later explain why nonnegative martingales converge almost surely without necessarily converging in L^1.

8.12. Wald's identity

We now return to random walks with i.i.d. increments. Let

$$X_n = \sum_{j=1}^{n} Z_j,$$

where $(Z_j)_{j\geq 1}$ are i.i.d. and satisfy

$$\mathbb{E}[|Z_1|] < \infty, \qquad \mathbb{E}[Z_1] = m.$$

Then

$$X_n - mn$$

is a martingale.

Theorem 8.9 (Wald's identity)**.** *Let T be a stopping time with*

$$\mathbb{E}[T] < \infty.$$

Then

$$\mathbb{E}[X_T] = m\,\mathbb{E}[T].$$

Proof. Since $n \wedge T \leq n$, the bounded-time version of optional stopping applies to the martingale $(X_n - mn)$. Therefore, for every n,

$$\mathbb{E}[X_{n\wedge T}] = m\,\mathbb{E}[n \wedge T].$$

Because T is integrable,

$$\mathbb{E}[n \wedge T] \to \mathbb{E}[T].$$

So it remains to prove

$$\mathbb{E}[X_{n\wedge T}] \to \mathbb{E}[X_T].$$

We estimate the truncation error:

$$\big|\mathbb{E}[X_{n\wedge T}] - \mathbb{E}[X_T]\big| \leq \mathbb{E}\big[|X_{n\wedge T} - X_T|\big].$$

Now on the event $\{T > n\}$,

$$X_T - X_{n\wedge T} = X_T - X_n = \sum_{m=n+1}^{T} Z_m,$$

so

$$\mathbb{E}\big[|X_{n\wedge T} - X_T|\big] \leq \mathbb{E}\left[\sum_{m=n+1}^{\infty} |Z_m| \mathbf{1}_{\{T\geq m\}}\right].$$

By Tonelli's theorem,

$$\mathbb{E}\big[|X_{n\wedge T} - X_T|\big] \leq \sum_{m=n+1}^{\infty} \mathbb{E}\big[|Z_m| \mathbf{1}_{\{T\geq m\}}\big].$$

The key observation is that the event $\{T \geq m\}$ is determined by

$$Z_1, Z_2, \ldots, Z_{m-1},$$

so it is independent of Z_m. Therefore,

$$\mathbb{E}\big[|Z_m|\mathbf{1}_{\{T\geq m\}}\big] = \mathbb{E}[|Z_m|]\,\mathbb{P}(T \geq m) = \mathbb{E}[|Z_1|]\,\mathbb{P}(T \geq m).$$

Hence

$$\mathbb{E}\big[|X_{n\wedge T} - X_T|\big] \leq \mathbb{E}[|Z_1|] \sum_{m=n+1}^{\infty} \mathbb{P}(T \geq m).$$

Finally, for any nonnegative integer-valued random variable T,

$$\mathbb{E}[T] = \sum_{m=1}^{\infty} \mathbb{P}(T \geq m).$$

Since $\mathbb{E}[T] < \infty$, the tail sum tends to zero. Thus

$$\mathbb{E}\big[|X_{n\wedge T} - X_T|\big] \to 0,$$

which implies

$$\mathbb{E}[X_T] = m\,\mathbb{E}[T].$$

□

If $X_n = \sum_{j=1}^{n} Z_j$ with i.i.d. increments of mean m, and if T is an integrable stopping time, then

$$\mathbb{E}[X_T] = m\,\mathbb{E}[T].$$

8.13. Doob's maximal inequality: the nonnegative case

The next application of OST is a maximal bound for nonnegative martingales.

Theorem 8.10 (Doob's maximal inequality)**.** *Let $(X_n)_{n\geq 0}$ be a nonnegative martingale. Then for every $\lambda > 0$ and every integer $n \geq 0$,*

$$\mathbb{P}\left(\max_{1\leq t\leq n} X_t \geq \lambda\right) \leq \frac{\mathbb{E}[X_0]}{\lambda}.$$

Proof. Define the first hitting time of level λ:

$$T := \inf\{t > 0 : X_t \geq \lambda\}.$$

Then

$$\left\{\max_{1\leq t\leq n} X_t \geq \lambda\right\} = \{T \leq n\}.$$

Because $T \wedge n \leq n$, the bounded-time version of optional stopping gives

$$\mathbb{E}[X_{T\wedge n}] = \mathbb{E}[X_0].$$

On the other hand, since $X_{T\wedge n} \geq 0$,

$$\mathbb{E}[X_{T\wedge n}] = \mathbb{P}(T > n)\,\mathbb{E}[X_{T\wedge n} \mid T > n] + \mathbb{P}(T \leq n)\,\mathbb{E}[X_{T\wedge n} \mid T \leq n].$$

If $T \leq n$, then by definition of T,

$$X_{T\wedge n} = X_T \geq \lambda.$$

Therefore

$$\mathbb{E}[X_{T\wedge n}] \geq \lambda\,\mathbb{P}(T \leq n).$$

Combining the two displays,

$$\lambda\,\mathbb{P}(T \leq n) \leq \mathbb{E}[X_0].$$

This is exactly the desired inequality. □

Remark 8.11. This is the martingale analogue of Markov's inequality, but now it controls the *entire path up to time n*, not just the single random variable X_n.

8.14. Martingale convergence: what should it mean?

The lecture then turns to the long-run behavior of martingales.

This is different from Markov-chain convergence. For a Markov chain one often studies limits such as

$$P_{ij}^{(n)} \to \pi_j.$$

For martingales, the natural question is whether the random variables themselves converge:

$$X_n \to X_\infty \qquad \text{almost surely.}$$

The notes motivate this with two examples:

- in gambler's ruin, the stopped martingale $(X_{n\wedge T})$ converges to

$$X_\infty = \begin{cases} c, & \text{with probability } a/c, \\ 0, & \text{with probability } 1 - a/c; \end{cases}$$

- the series

$$\sum_{j=1}^{\infty} \frac{Z_j}{j}$$

  converges, whereas the unsigned harmonic series diverges. In a very real sense, the randomness creates cancellation.

8.15. Martingale convergence theorem

Theorem 8.12 (Martingale convergence theorem)**.** *Let $(X_n)_{n\geq 0}$ be a martingale. If there exists a constant $C < \infty$ such that*

$$\mathbb{E}[|X_n|] \leq C \qquad \textit{for all } n,$$

then there exists a random variable X_∞ such that

$$X_n \to X_\infty \qquad \textit{almost surely.}$$

Remark 8.13. This hypothesis is strictly weaker than uniform integrability. It gives almost sure convergence, but not automatically L^1-convergence.

8.16. The up-crossing idea

The proof is based on a simple but powerful idea.

Fix an interval $[a, b]$ with $a < b$. If a sample path fails to converge, then it must keep oscillating. In particular, there must be some interval $[a, b]$ that the path crosses from below to above infinitely many times.

This leads to the notion of *up-crossings*.

Definition 8.14 (Up-crossings)**.** Let (x_n) be a real sequence and let $a < b$. An *up-crossing* of $[a, b]$ is completed whenever the sequence first goes to $\leq a$ and later reaches $\geq b$. We write

$$U_n(a, b)$$

for the number of completed up-crossings of $[a, b]$ up to time n.

If a path makes infinitely many up-crossings of some interval, then it cannot converge. Conversely, if a real sequence does not converge, then there exist rational numbers $a < b$ such that the sequence makes infinitely many up-crossings of $[a, b]$.

So to prove almost sure convergence, it is enough to show that for every rational pair $a < b$,

$$U_\infty(a, b) < \infty \qquad \text{almost surely.}$$

8.17. A trading strategy attached to an interval

Fix $a < b$. Interpret X_n as the price of a stock, and use the following strategy:

- buy one unit when the price is at or below a;
- hold the stock while waiting for the price to rise;
- sell when the price reaches or exceeds b;
- then repeat the procedure.

Let $B_j \in \{0, 1\}$ denote whether we are holding the stock during step j. The crucial point is that B_j is determined by the past, so it is $\mathcal{F}_{j-1}$-measurable.

Define the wealth process

$$W_n := \sum_{j=1}^{n} B_j(X_j - X_{j-1}).$$

Proposition 8.15. *If (X_n) is a martingale, then (W_n) is also a martingale.*

Proof. Since

$$W_{n+1} = W_n + B_{n+1}(X_{n+1} - X_n),$$

and B_{n+1} is $\mathcal{F}_n$-measurable,

$$\mathbb{E}[W_{n+1} \mid \mathcal{F}_n] = W_n + B_{n+1}\,\mathbb{E}[X_{n+1} - X_n \mid \mathcal{F}_n].$$

Because (X_n) is a martingale,

$$\mathbb{E}[X_{n+1} - X_n \mid \mathcal{F}_n] = 0.$$

Therefore

$$\mathbb{E}[W_{n+1} \mid \mathcal{F}_n] = W_n.$$

□

8.18. The up-crossing inequality

Every completed up-crossing earns at least $b - a$. The only possible loss comes from an unfinished trade at time n. Therefore

$$W_n \geq (b-a)U_n(a,b) - |X_n - a|.$$

Taking expectations and using $\mathbb{E}[W_n] = \mathbb{E}[W_0] = 0$, we obtain

$$0 = \mathbb{E}[W_n] \geq (b-a)\mathbb{E}[U_n(a,b)] - \mathbb{E}[|X_n - a|].$$

Hence

$$\mathbb{E}[U_n(a,b)] \leq \frac{\mathbb{E}[|X_n - a|]}{b-a} \leq \frac{\mathbb{E}[|X_n|] + |a|}{b-a}.$$

If $\mathbb{E}[|X_n|] \leq C$ for all n, then

$$\mathbb{E}[U_n(a,b)] \leq \frac{C + |a|}{b-a},$$

and the right-hand side does not depend on n.

For every interval $[a,b]$ with $a < b$,

$$\mathbb{E}[U_n(a,b)] \leq \frac{\mathbb{E}[|X_n - a|]}{b-a} \leq \frac{C + |a|}{b-a} \qquad \text{if } \mathbb{E}[|X_n|] \leq C.$$

8.19. From bounded expected up-crossings to almost sure convergence

Because $U_n(a,b)$ is nondecreasing in n, monotone convergence gives

$$\mathbb{E}[U_\infty(a,b)] = \lim_{n\to\infty} \mathbb{E}[U_n(a,b)] \leq \frac{C + |a|}{b-a} < \infty.$$

So for every fixed interval $[a, b]$,

$$\mathbb{P}(U_\infty(a, b) = \infty) = 0.$$

Now restrict to rational endpoints. Since there are only countably many pairs $(a, b) \in \mathbb{Q}^2$ with $a < b$,

$$\mathbb{P}\big(\exists a, b \in \mathbb{Q},\ a < b,\ U_\infty(a, b) = \infty\big) = 0.$$

But if a real sequence does not converge, then one can find rational numbers

$$a < b$$

strictly between its liminf and limsup, and this forces infinitely many up-crossings of $[a, b]$. Therefore the event of nonconvergence has probability zero.

This proves the martingale convergence theorem.

8.20. Summary

Lecture 7 develops three major themes.

- **Careful optional stopping:** for gambler's ruin, OST works once we verify the tail condition using an exponential bound on the hitting time.
- **Uniform integrability:** UI is the right tool for proving tail conditions such as

  $$\mathbb{E}\big[|X_n|\mathbf{1}_{\{T>n\}}\big] \to 0,$$

  and a uniform L^2-bound implies UI.
- **Long-run martingale behavior:** Wald's identity and Doob's maximal inequality are useful applications of OST, and the up-crossing method proves that any martingale with

  $$\sup_n \mathbb{E}[|X_n|] < \infty$$

  converges almost surely.

9. Lecture 7

9.1. Administrative note

The handwritten notes begin with a short reminder that **Midterm 2** is next week, with the same general format and timing as before, and that it covers Lectures 5–7.

After this announcement, the lecture turns to one of the main questions in martingale theory:

> When does a martingale converge, and what kind of convergence can we expect?

The lecture first proves almost sure convergence under a uniform first-moment bound, then explains why this is not enough for expectations, and finally introduces uniform integrability, stopping, and L^p-methods.

9.2. Martingale convergence: the main theorem

Theorem 9.1 (Martingale convergence theorem)**.** *Let $(X_n)_{n\geq 0}$ be a martingale adapted to a filtration $(\mathcal{F}_n)_{n\geq 0}$. Assume that*

$$\sup_{n\geq 0} \mathbb{E}[|X_n|] < \infty.$$

Then there exists an integrable random variable X_∞ such that

$$X_n \to X_\infty \qquad \textit{almost surely.}$$

This is one of the central structural results for discrete-time martingales. It says that a martingale cannot keep oscillating forever provided its first moments stay uniformly bounded.

The proof idea in the lecture is based on *up-crossings*. The rough philosophy is:

> If a real sequence does not converge, then it must oscillate across some interval infinitely many times.

So the strategy is to show that a martingale with bounded first moments cannot make infinitely many up-crossings of any interval.

9.3. Why non-convergence means infinite up-crossings

Fix real numbers $a < b$. For a real-valued path (x_n), an *up-crossing* of $[a, b]$ means that the path first goes down to a or below, and later rises to b or above.

A convenient recursive definition is:

$$\tau_1 := \inf\{n \geq 0 : x_n \leq a\}, \qquad \sigma_1 := \inf\{n > \tau_1 : x_n \geq b\},$$

then

$$\tau_2 := \inf\{n > \sigma_1 : x_n \leq a\}, \qquad \sigma_2 := \inf\{n > \tau_2 : x_n \geq b\},$$

and so on. The number of completed up-crossings by time n is denoted by $U_n(a, b)$.

Why is this useful? If a real sequence (x_n) fails to converge, then there must exist some interval $[a, b]$ that it crosses infinitely often. By choosing rational endpoints, we may reduce to a countable collection of intervals. More precisely,

$$\{x_n \text{ does not converge}\} \subseteq \bigcup_{\substack{a,b\in\mathbb{Q}\\ a<b}} \{U_\infty(a, b) = \infty\}.$$

Therefore, to prove almost sure convergence of (X_n), it is enough to prove that for every rational $a < b$,

$$\mathbb{P}\big(U_\infty(a, b) = \infty\big) = 0.$$

9.4. The trading strategy behind up-crossings

The lecture interprets the martingale (X_n) as a stock price and builds a simple trading strategy.

We follow this rule:

- whenever the price is at or below a, we *buy* one share;
- we then keep holding it until the price reaches or exceeds b, at which point we *sell*;
- after selling, we wait until the process again comes down to a or below, and repeat.

Let $B_j \in \{0, 1\}$ denote whether we are holding one unit of stock during the step from time $j-1$ to time j. Then the cumulative gain up to time n is

$$W_n := \sum_{j=1}^{n} B_j\,(X_j - X_{j-1}).$$

The key point is that B_j is determined by the past, so it is $\mathcal{F}_{j-1}$-measurable. In martingale language, (B_j) is a predictable strategy.

9.5. Why the wealth process is again a martingale

Because (X_n) is a martingale,

$$\mathbb{E}[X_j - X_{j-1} \mid \mathcal{F}_{j-1}] = 0.$$

Since B_j is $\mathcal{F}_{j-1}$-measurable, we may pull it out of the conditional expectation:

$$\mathbb{E}\big[B_j(X_j - X_{j-1}) \mid \mathcal{F}_{j-1}\big] = B_j\,\mathbb{E}[X_j - X_{j-1} \mid \mathcal{F}_{j-1}] = 0.$$

Therefore

$$\mathbb{E}[W_n \mid \mathcal{F}_{n-1}] = W_{n-1},$$

so $(W_n)_{n\geq 0}$ is itself a martingale.

This is exactly the formal expression of the "fair game" principle: if prices follow a martingale, then any self-financing strategy based only on past information also has zero conditional expected gain.

9.6. Bounding the number of up-crossings

Each completed up-crossing of $[a, b]$ earns at least $b - a$, because we buy at a price at most a and later sell at a price at least b.

So if $U_n(a, b)$ up-crossings have been completed by time n, then the gain must satisfy

$$W_n \geq (b - a)U_n(a, b) - |X_n - a|.$$

The error term $|X_n - a|$ appears because by time n we might still be in the middle of an unfinished trade: we may have bought but not yet sold.

Taking expectations and using $\mathbb{E}[W_n] = \mathbb{E}[W_0] = 0$, we get

$$0 = \mathbb{E}[W_n] \geq (b - a)\mathbb{E}[U_n(a, b)] - \mathbb{E}[|X_n - a|].$$

Hence

$$\mathbb{E}[U_n(a, b)] \leq \frac{\mathbb{E}[|X_n - a|]}{b - a}.$$

Since

$$|X_n - a| \leq |X_n| + |a|,$$

the assumption $\sup_n \mathbb{E}|X_n| < \infty$ implies that

$$\sup_n \mathbb{E}[U_n(a, b)] < \infty.$$

This shows that the expected number of up-crossings of any fixed interval is uniformly bounded in n.

9.7. Proof of the martingale convergence theorem

Fix rational numbers $a < b$. Since $U_n(a, b)$ is increasing in n, the limit

$$U_\infty(a, b) := \lim_{n\to\infty} U_n(a, b)$$

exists in $[0, \infty]$. By monotone convergence,

$$\mathbb{E}[U_\infty(a, b)] = \lim_{n\to\infty} \mathbb{E}[U_n(a, b)] < \infty.$$

Therefore

$$\mathbb{P}(U_\infty(a, b) = \infty) = 0.$$

Since this holds for every rational interval $[a, b]$, we conclude that with probability one, the sample path makes only finitely many up-crossings of every rational interval. That forces the path to

converge.

So there exists a random variable X_∞ such that

$$X_n \to X_\infty \qquad \text{a.s.}$$

This proves the theorem.

A martingale with

$$\sup_{n\geq 0} \mathbb{E}[|X_n|] < \infty$$

converges almost surely.

9.8. A warning: almost sure convergence does not preserve expectation

The next point in the lecture is subtle but very important. Even if

$$X_n \to X_\infty \qquad \text{a.s.},$$

it does *not* automatically follow that

$$\mathbb{E}[X_\infty] = \mathbb{E}[X_0].$$

In other words, almost sure convergence alone is too weak to justify passing expectations through the limit.

The lecture gives a counterexample based on simple random walk.

Example 9.2 (Stopped simple random walk)**.** Let (X_n) be the one-dimensional symmetric simple random walk started at

$$X_0 = 1.$$

Let

$$T := \inf\{n \geq 0 : X_n = 0\}$$

be the hitting time of 0, and define the stopped process

$$Y_n := X_{n\wedge T}.$$

Then (Y_n) is a martingale, and by optional stopping at the bounded time $n \wedge T$,

$$\mathbb{E}[Y_n] = \mathbb{E}[Y_0] = 1 \qquad \text{for all } n.$$

On the other hand, the one-dimensional symmetric random walk is recurrent, so

$$\mathbb{P}(T < \infty) = 1.$$

Hence

$$Y_n \to 0 \qquad \text{a.s.}$$

and therefore

$$\mathbb{E}[Y_\infty] = 0 \neq 1 = \mathbb{E}[Y_0].$$

So we need an additional condition that rules out "mass escaping to the tails." That condition is uniform integrability.

9.9. Recall: uniform integrability

Definition 9.3 (Uniform integrability)**.** A sequence of integrable random variables $(X_n)_{n\geq 0}$ is called *uniformly integrable* if for every $\varepsilon > 0$ there exists $K > 0$ such that

$$\sup_{n\geq 0} \mathbb{E}\big[|X_n|\mathbf{1}_{\{|X_n|>K\}}\big] \leq \varepsilon.$$

The same cutoff K must work for every n. This is the uniform part.

Uniform integrability is exactly the right condition for upgrading almost sure convergence to convergence in L^1.

9.10. Uniform integrability plus almost sure convergence gives L1 convergence

Theorem 9.4. *Suppose $(X_n)_{n\geq 0}$ is uniformly integrable and*

$$X_n \to X_\infty \qquad \textit{almost surely.}$$

Then

$$\mathbb{E}[|X_n - X_\infty|] \to 0.$$

In particular,

$$\mathbb{E}[X_n] \to \mathbb{E}[X_\infty].$$

Proof. Fix $\varepsilon > 0$. By uniform integrability, choose $K_\varepsilon > 0$ such that

$$\sup_{n} \mathbb{E}\big[|X_n|\mathbf{1}_{\{|X_n|>K_\varepsilon\}}\big] \leq \varepsilon.$$

Because $X_n \to X_\infty$ a.s. and (X_n) is uniformly integrable, Fatou's lemma gives

$$\mathbb{E}[|X_\infty|] \leq \liminf_{n\to\infty} \mathbb{E}[|X_n|] < \infty.$$

Moreover, for every $K > 0$,

$$\mathbb{E}\big[|X_\infty|\mathbf{1}_{\{|X_\infty|>K\}}\big] \leq \liminf_{n\to\infty} \mathbb{E}\big[|X_n|\mathbf{1}_{\{|X_n|>K\}}\big].$$

So for some possibly larger constant K'_ε,

$$\mathbb{E}\big[|X_\infty|\mathbf{1}_{\{|X_\infty|>K'_\varepsilon\}}\big] \leq \varepsilon.$$

Take

$$K := \max\{K_\varepsilon, K'_\varepsilon\}.$$

Then split the difference into a bounded part and two tail parts:

$$\begin{aligned}\mathbb{E}[|X_n - X_\infty|] \le{}& \mathbb{E}\big[|X_n - X_\infty|\mathbf{1}_{\{|X_n|\le K,\ |X_\infty|\le K\}}\big] \\ &+ \mathbb{E}\big[|X_n|\mathbf{1}_{\{|X_n|>K\}}\big] + \mathbb{E}\big[|X_\infty|\mathbf{1}_{\{|X_\infty|>K\}}\big].\end{aligned}$$

On the bounded event $\{|X_n| \le K, |X_\infty| \le K\}$, we have

$$|X_n - X_\infty| \le 2K,$$

and the integrand converges almost surely to 0. Therefore the first term tends to 0 by the dominated convergence theorem. The second and third terms are each at most ε. Hence

$$\limsup_{n\to\infty} \mathbb{E}[|X_n - X_\infty|] \le 2\varepsilon.$$

Since $\varepsilon > 0$ was arbitrary,

$$\mathbb{E}[|X_n - X_\infty|] \to 0.$$

□

So the lecture's message is:

> Almost sure convergence gives a pathwise limit, but uniform integrability is what lets expectations pass through the limit.

9.11. Examples of uniformly integrable martingales

Example 9.5 (Random harmonic series)**.** Let

$$M_n := \sum_{j=1}^{n} \frac{1}{j}\,\xi_j,$$

where ξ_j are i.i.d. random variables with

$$\mathbb{P}(\xi_j = 1) = \mathbb{P}(\xi_j = -1) = \frac{1}{2}.$$

Then (M_n) is a martingale. Also,

$$\mathbb{E}[M_n^2] = \sum_{j=1}^{n} \frac{1}{j^2} \le \sum_{j=1}^{\infty} \frac{1}{j^2} < \infty.$$

Thus (M_n) is bounded in L^2, hence uniformly integrable. Therefore

$$M_n \to M_\infty \qquad \text{a.s. and in } L^1.$$

This is a nice probabilistic contrast with the ordinary harmonic series: adding random signs makes the partial sums converge.

Example 9.6 (Pólya's urn)**.** Start with an urn containing red and blue balls. At each step, draw one ball uniformly at random from the urn, replace it, and then add one more ball of the same color.

Let M_n be the proportion of red balls after n draws. Then (M_n) is a martingale. Indeed, conditional on the current urn composition, the expected proportion of red after the next update equals the current proportion.

Also,

$$0 \le M_n \le 1 \qquad \text{for all } n,$$

so the martingale is bounded and therefore uniformly integrable. Hence

$$M_n \to M_\infty \qquad \text{a.s. and in } L^1.$$

In fact, with two initial colors, the limit law is Beta, depending on the initial composition. In the special symmetric case of one red and one blue ball initially, the limit is Uniform$([0,1])$.

9.12. Uniformly integrable martingales and generalized optional stopping

A very useful consequence of martingale convergence is that optional stopping continues to work for stopping times that may be infinite, provided the martingale is uniformly integrable.

Theorem 9.7 (Generalized optional stopping for UI martingales)**.** *Let $(X_n)_{n\ge 0}$ be a uniformly integrable martingale, and let T be a stopping time. Define*

$$Y_n := X_{n\wedge T}.$$

Then (Y_n) is a martingale and is uniformly integrable. If $X_n \to X_\infty$ almost surely, then

$$Y_n \to X_T^* \qquad \textit{a.s. and in } L^1,$$

where

$$X_T^* := X_T \mathbf{1}_{\{T<\infty\}} + X_\infty \mathbf{1}_{\{T=\infty\}}.$$

Consequently,

$$\mathbb{E}[X_T^*] = \mathbb{E}[X_0].$$

Idea. Since $n \wedge T$ is bounded, the ordinary optional stopping theorem gives

$$\mathbb{E}[Y_n] = \mathbb{E}[X_{n\wedge T}] = \mathbb{E}[X_0].$$

Because a UI martingale admits the representation

$$X_n = \mathbb{E}[X_\infty \mid \mathcal{F}_n],$$

we also have

$$Y_n = X_{n\wedge T} = \mathbb{E}[X_\infty \mid \mathcal{F}_{n\wedge T}],$$

so (Y_n) is uniformly integrable. Finally,

- on $\{T < \infty\}$, we have $n \wedge T = T$ for all large n, hence $Y_n = X_T$;
- on $\{T = \infty\}$, we have $Y_n = X_n \to X_\infty$.

Thus $Y_n \to X_T^*$ almost surely, and uniform integrability upgrades this to L^1-convergence. Passing expectations to the limit gives

$$\mathbb{E}[X_T^*] = \mathbb{E}[X_0].$$

□

This is exactly the bridge between martingale convergence and optional stopping emphasized in the handwritten notes.

9.13. Example: a positive martingale that still goes to zero

Consider the multiplicative process defined by

$$X_0 = 1, \qquad X_{n+1} = \begin{cases} \frac{3}{2}X_n, & \text{with probability } \frac{1}{2}, \\ \frac{1}{2}X_n, & \text{with probability } \frac{1}{2}, \end{cases}$$

with the multipliers independent from step to step.

Because the conditional expected multiplier is

$$\frac{1}{2}\cdot\frac{3}{2} + \frac{1}{2}\cdot\frac{1}{2} = 1,$$

we have

$$\mathbb{E}[X_{n+1} \mid \mathcal{F}_n] = X_n,$$

so (X_n) is a martingale.

However,

$$\log X_n = \sum_{i=1}^{n} \log Z_i,$$

where

$$Z_i = \begin{cases} \frac{3}{2}, & \text{with probability } \frac{1}{2}, \\ \frac{1}{2}, & \text{with probability } \frac{1}{2}. \end{cases}$$

Now

$$\mathbb{E}[\log Z_i] = \frac{1}{2}\log\frac{3}{2} + \frac{1}{2}\log\frac{1}{2} = \frac{1}{2}\log\frac{3}{4} < 0.$$

Therefore, by the strong law of large numbers,

$$\frac{1}{n}\log X_n \to \mathbb{E}[\log Z_1] < 0,$$

which implies

$$X_n \to 0 \qquad \text{a.s.}$$

So this is a nonnegative martingale that converges almost surely to 0, even though $\mathbb{E}[X_n] = 1$ for every n. This shows again that nonnegative martingales converge a.s., but they need not be uniformly integrable.

Now define the stopping time

$$T := \inf\{n \geq 0 : X_n \geq 10\}.$$

Then the stopped process $(X_{n\wedge T})$ is bounded:

- if $n < T$, then $X_{n\wedge T} = X_n < 10$;
- if $n \geq T$, then $X_{n\wedge T} = X_T \leq \frac{3}{2}\cdot 10 = 15$, because the process crosses the level 10 by at most one final factor of 3/2.

Hence $(X_{n\wedge T})$ is bounded, and therefore uniformly integrable.

Applying generalized optional stopping,

$$\mathbb{E}[X_T^*] = \mathbb{E}[X_0] = 1,$$

where

$$X_T^* = X_T \mathbf{1}_{\{T<\infty\}} + 0 \cdot \mathbf{1}_{\{T=\infty\}} \qquad \text{a.s.}$$

because $X_n \to 0$ on $\{T = \infty\}$. Since $X_T \geq 10$ on $\{T < \infty\}$,

$$1 = \mathbb{E}[X_T^*] \geq 10\,\mathbb{P}(T < \infty).$$

So

$$\mathbb{P}(T < \infty) \leq 0.1, \qquad \mathbb{P}(T = \infty) \geq 0.9.$$

Thus, with probability at least 0.9, this martingale never reaches the level 10.

9.14. Doob's Lp maximal inequality

The lecture then turns to stronger integrability assumptions, namely L^p-bounds with $p > 1$.

Theorem 9.8 (Doob's maximal inequality)**.** *Let $(X_n)_{n\geq 0}$ be a martingale and let $p > 1$. Then for every $\lambda > 0$ and every n,*

$$\mathbb{P}\left(\max_{0\leq k\leq n} |X_k| \geq \lambda\right) \leq \frac{\mathbb{E}[|X_n|^p]}{\lambda^p}.$$

Consequently,

$$\mathbb{E}\left[\max_{0\leq k\leq n} |X_k|^p\right] \leq \left(\frac{p}{p-1}\right)^p \mathbb{E}[|X_n|^p].$$

The point is that this inequality controls the entire past maximum in terms of the terminal L^p-moment.

9.15. Lp convergence under a uniform p-th moment bound

Theorem 9.9. *Let $(X_n)_{n\geq 0}$ be a martingale and let $p > 1$. If*

$$\sup_{n\geq 0} \mathbb{E}[|X_n|^p] < \infty,$$

then there exists a random variable X_∞ such that

$$X_n \to X_\infty \qquad \text{a.s. and in } L^p.$$

Proof. Because $p > 1$, the inequality

$$\sup_n \mathbb{E}[|X_n|^p] < \infty$$

implies in particular that

$$\sup_n \mathbb{E}[|X_n|] < \infty$$

by Hölder's inequality. So the martingale convergence theorem gives almost sure convergence:

$$X_n \to X_\infty \qquad \text{a.s.}$$

Now apply Doob's maximal inequality to $\max_{0\leq k\leq n} |X_k|^p$, then let $n \to \infty$. By monotone convergence,

$$\mathbb{E}\left[\sup_{k\geq 0} |X_k|^p\right] = \lim_{n\to\infty} \mathbb{E}\left[\max_{0\leq k\leq n} |X_k|^p\right] \leq \left(\frac{p}{p-1}\right)^p \sup_n \mathbb{E}[|X_n|^p] < \infty.$$

So $\sup_k |X_k|^p$ is integrable.

Next, almost surely,

$$|X_n - X_\infty|^p \to 0.$$

Also,

$$|X_n - X_\infty|^p \leq 2^p\big(|X_n|^p + |X_\infty|^p\big) \leq 2^p \left(\sup_{k\geq 0} |X_k|^p + |X_\infty|^p\right).$$

Since $|X_\infty| \leq \sup_k |X_k|$, the dominating random variable on the right is integrable. Therefore, by the dominated convergence theorem,

$$\mathbb{E}[|X_n - X_\infty|^p] \to 0.$$

So the convergence is in L^p. □

9.16. Doob martingales

A particularly important class of martingales comes from conditional expectation.

Definition 9.10 (Doob martingale)**.** Let X be an integrable random variable and let

$$\mathcal{F}_1 \subseteq \mathcal{F}_2 \subseteq \cdots$$

be a filtration. Define

$$M_n := \mathbb{E}[X \mid \mathcal{F}_n].$$

Then $(M_n)_{n\geq 1}$ is called the *Doob martingale associated with* X.

This process can be interpreted as the best prediction of X given the information available up to time n.

Proposition 9.11. *The process* (M_n) *is a martingale.*

Proof. Each M_n is $\mathcal{F}_n$-measurable and integrable. Also, by the tower property,

$$\mathbb{E}[M_{n+1} \mid \mathcal{F}_n] = \mathbb{E}\big[\mathbb{E}[X \mid \mathcal{F}_{n+1}] \mid \mathcal{F}_n\big] = \mathbb{E}[X \mid \mathcal{F}_n] = M_n.$$

So (M_n) is a martingale. □

9.17. Why a Doob martingale is uniformly integrable

The handwritten notes prove that Doob martingales are uniformly integrable. One clean way to see this is to combine a maximal inequality with dominated convergence.

Fix $K > 0$, and define the tail event

$$A_K := \left\{ \sup_{m\geq 1} |M_m| \geq K \right\}.$$

Then for every n,

$$\{|M_n| \geq K\} \subseteq A_K,$$

so

$$\mathbb{E}\big[|M_n|\mathbf{1}_{\{|M_n|\geq K\}}\big] \leq \mathbb{E}\big[|X|\mathbf{1}_{A_K}\big],$$

where we used $|M_n| = |\mathbb{E}[X \mid \mathcal{F}_n]| \leq \mathbb{E}[|X| \mid \mathcal{F}_n]$ and then took expectations.

Next, Doob's L^1 maximal inequality gives

$$\mathbb{P}\left(\max_{1\leq m\leq N} |M_m| \geq K \right) \leq \frac{\mathbb{E}[|M_N|]}{K} \leq \frac{\mathbb{E}[|X|]}{K}.$$

Letting $N \to \infty$ yields

$$\mathbb{P}(A_K) \leq \frac{\mathbb{E}[|X|]}{K} \to 0.$$

Hence $\mathbf{1}_{A_K} \to 0$ almost surely as $K \to \infty$, and it is dominated by 1. Since $|X|$ is integrable, dominated convergence gives

$$\mathbb{E}\big[|X|\mathbf{1}_{A_K}\big] \to 0.$$

Therefore

$$\sup_n \mathbb{E}\big[|M_n|\mathbf{1}_{\{|M_n|\geq K\}}\big] \to 0.$$

So (M_n) is uniformly integrable.

Once we know that, the martingale convergence theorem and the L^1-upgrade above imply

$$M_n \to M_\infty \qquad \text{a.s. and in } L^1.$$

9.18. Identifying the terminal variable

If

$$\mathcal{F}_\infty := \sigma\left(\bigcup_{n\geq 1} \mathcal{F}_n\right),$$

then the limit of a Doob martingale is

$$M_\infty = \mathbb{E}[X \mid \mathcal{F}_\infty].$$

So as information accumulates, the best prediction of X given $\mathcal{F}_n$ converges to the best prediction given the full limiting information $\mathcal{F}_\infty$.

9.19. Application to Bayesian statistics

The last pages of the lecture connect Doob martingales to Bayesian estimation.

Suppose

$$\theta \sim \pi$$

is a parameter with prior distribution π, and conditional on θ, the observations

$$X_1, X_2, \ldots$$

are i.i.d. with density or mass function p_θ. For a quantity of interest $g(\theta)$, define the posterior mean estimator

$$\hat{g}_n := \mathbb{E}[g(\theta) \mid X_1, \ldots, X_n].$$

If we let

$$\mathcal{F}_n := \sigma(X_1, \ldots, X_n),$$

then

$$\hat{g}_n = \mathbb{E}[g(\theta) \mid \mathcal{F}_n]$$

is exactly a Doob martingale. Therefore,

$$\hat{g}_n \to g_\infty \qquad \text{a.s. and in } L^1,$$

where

$$g_\infty = \mathbb{E}[g(\theta) \mid X_1, X_2, \ldots].$$

Under an identifiability assumption, the infinite data sequence determines θ, so the limiting conditional expectation collapses to the truth:

$$g_\infty = g(\theta).$$

Thus the posterior mean estimator converges to the target quantity.

The notes mention a concrete example: the Bernoulli model with a Beta prior. In that case, Bayesian updating is equivalent to Pólya's urn, which explains why Beta laws naturally appear as limiting distributions.

9.20. Summary

Lecture 7 develops the long-run theory of martingales.
The core ideas are:

- **Up-crossings** show that a martingale with

  $$\sup_n \mathbb{E}[|X_n|] < \infty$$

  must converge almost surely.

- **Almost sure convergence alone is not enough** to preserve expectations; the stopped random walk example shows this clearly.

- **Uniform integrability** is the extra condition that upgrades a.s. convergence to L^1-convergence.

- For a **uniformly integrable martingale**, generalized optional stopping holds even for stopping times that may be infinite.

- A uniform L^p**-bound with** $p > 1$ implies convergence in L^p.

- **Doob martingales** of the form

  $$M_n = \mathbb{E}[X \mid \mathcal{F}_n]$$

  are fundamental examples and are automatically uniformly integrable.

- In statistics, posterior mean estimators are Doob martingales, so martingale convergence explains why Bayesian estimators stabilize as more data arrive.

10. Midterm 2

STA447/2006: Midterm Exam #2

Instructor: Wenlong Mou
Date: March 22nd, 2024
Total marks: 100 points
Time allowed: 105 minutes

This section rewrites the uploaded midterm and solution sheet in the same typed-note style as the rest of the file. The goal is not just to record the final answers, but also to explain *why* each answer is correct.

Question 1 [30 points]

Mark each statement as true or false.

Answer key:

(1) T, (2) F, (3) F, (4) F, (5) F, (6) T, (7) T, (8) F, (9) T, (10) F.

(1) **Statement.** For a discrete-time stochastic process $(X_n)_{n=0,1,2,\dots}$, if T_1 and T_2 are both stopping times, then $T_1 \cdot T_2$ is a stopping time.

Answer: True.

Explanation. In discrete time we can write, for each integer $n \geq 0$,

$$\{T_1T_2 \leq n\} = \{T_1 = 0\} \cup \{T_2 = 0\} \cup \bigcup_{k=1}^{n} \Big(\{T_1 = k\} \cap \{T_2 \leq \lfloor n/k \rfloor\}\Big).$$

Since T_1 and T_2 are stopping times, each event on the right is in $\mathcal{F}_n$. Hence $\{T_1T_2 \leq n\} \in \mathcal{F}_n$, so T_1T_2 is a stopping time.

(2) **Statement.** For a Brownian motion $(B_t)_{t\geq 0}$, if T_1 and T_2 are both stopping times, then $T_1 \cdot T_2$ is a stopping time.

Answer: False.

Explanation. In continuous time, products of stopping times are *not* one of the standard closure operations. The classes that are stable are things like $T_1 \wedge T_2$, $T_1 \vee T_2$, and $T_1 + c$ for deterministic $c \geq 0$. In general, the event $\{T_1T_2 \leq t\}$ can depend on information from times strictly larger than t, so it need not lie in $\mathcal{F}_t$.

(3) **Statement.** Let $(X_n)_{n\geq 0}$ be a discrete-time martingale. For any stopping time T such that $\mathbb{P}(T < \infty) = 1$, we have

$$\mathbb{E}[X_T] = \mathbb{E}[X_0].$$

Answer: False.

Explanation. Almost sure finiteness of T is *not* enough for optional stopping. One also needs an extra condition such as boundedness of T, uniform integrability of the martingale,

bounded increments together with $\mathbb{E}[T] < \infty$, and so on. A standard counterexample is a simple random walk stopped at its hitting time of 0: the stopped process is a martingale, the stopping time is finite almost surely, but the expectation drops.

(4) **Statement.** Let $(X_n)_{n\geq 0}$ be a discrete-time martingale. If for every fixed $n \geq 0$,

$$\lim_{K\to\infty} \mathbb{E}\big[|X_n|\mathbf{1}_{\{|X_n|\geq K\}}\big] = 0,$$

then $(X_n)_{n\geq 0}$ is uniformly integrable.

Answer: False.

Explanation. The displayed limit for a *fixed* n is just ordinary integrability of X_n. Uniform integrability requires the tail bound to hold *uniformly in* n:

$$\lim_{K\to\infty} \sup_{n\geq 0} \mathbb{E}\big[|X_n|\mathbf{1}_{\{|X_n|\geq K\}}\big] = 0.$$

The statement forgets the essential supremum over n.

(5) **Statement.** Let $(X_n)_{n\geq 0}$ be a discrete-time irreducible and aperiodic Markov chain on a countably infinite state space $S \subseteq \mathbb{R}$. If $(X_n)_{n\geq 0}$ is also a non-negative martingale that converges almost surely to some X_∞, then the chain has a stationary distribution π, and $X_\infty \sim \pi$.

Answer: False.

Explanation. Convergence of a non-negative martingale only tells us that a limit random variable exists almost surely. It does *not* imply that the Markov chain is positive recurrent, and positive recurrence is what is needed for existence of a stationary distribution on a countable irreducible chain. Also, even if a stationary distribution existed, it would not automatically follow that the limit law is that stationary distribution unless the chain were actually converging to equilibrium under the hypotheses of the Markov chain convergence theorem.

(6) **Statement.** If $(X_t)_{t\geq 0}$ is a martingale and T is a stopping time, then $(X_{t\wedge T})_{t\geq 0}$ is also a martingale.

Answer: True.

Explanation. This is the standard stopped-martingale theorem. For $s \leq t$,

$$\mathbb{E}[X_{t\wedge T} \mid \mathcal{F}_s] = X_{s\wedge T},$$

provided the original martingale is integrable. Intuitively, once time T is reached the process just freezes, and before time T it behaves exactly like the original martingale.

(7) **Statement.** Let $(B_t)_{t\geq 0}$ be a Brownian motion and

$$T := \inf\{t > 0 : B_t = 0\}.$$

Then $T = 0$ with probability 1.

Answer: True.

Explanation. Brownian motion returns to 0 infinitely often, and in fact the zero set has no isolated points almost surely. So even if we ask for the *first positive* time at which the process comes back to 0, that infimum is still 0 almost surely.

(8) **Statement.** Let $(B_t)_{t\geq 0}$ be a Brownian motion and let f be continuously differentiable. Then

$$\mathbb{E}[f(B_t)] = \mathbb{E}\left[\int_0^t f'(B_s)\,dB_s\right].$$

Answer: False.

Explanation. The expectation of an Itô integral is 0 whenever the integral is well-defined, so the right-hand side is typically 0. But the left-hand side is usually not 0. For example, if $f(x) = x^2$, then

$$\mathbb{E}[f(B_t)] = \mathbb{E}[B_t^2] = t, \qquad \mathbb{E}\left[\int_0^t 2B_s\,dB_s\right] = 0.$$

The correct Itô formula is

$$f(B_t) = f(0) + \int_0^t f'(B_s)\,dB_s + \frac{1}{2}\int_0^t f''(B_s)\,ds$$

when $f \in C^2$.

(9) **Statement.** Let $(X_t)_{t\geq 0}$ be a two-dimensional standard Brownian motion. With probability 1, for any $t > 0$, there exists $t' > t$ such that

$$\left\| X_{t'} - \begin{bmatrix} 100 \\ 100 \end{bmatrix} \right\|_2 \leq 10^{-2}.$$

Answer: True.

Explanation. Two-dimensional Brownian motion is recurrent. In particular, every open ball is hit infinitely many times almost surely. The ball of radius 10^{-2} centered at $(100, 100)$ is an open set, so after any time t the process will almost surely enter that ball at some later time.

(10) **Statement.** If $(B_t)_{t\geq 0}$ is a Brownian motion, then

$$\int_0^t B_s^2\,dB_s$$

is normally distributed.

Answer: False.

Explanation. An Itô integral is automatically Gaussian only when the integrand is deterministic. Here the integrand B_s^2 is random. In fact, Itô's formula gives

$$d(B_t^3) = 3B_t^2\,dB_t + 3B_t\,dt,$$

so

$$\int_0^t B_s^2\, dB_s = \frac{1}{3}B_t^3 - \int_0^t B_s\, ds,$$

which is not Gaussian.

Question 2 [9 points]

Give an example of a martingale $(X_t)_{t\geq 0}$ such that

$$\sup_{t\geq 0} \mathbb{E}[|X_t|] \leq C < \infty, \qquad X_t \to X_\infty \text{ a.s. as } t \to \infty, \qquad \text{but } \mathbb{E}[X_0] \neq \mathbb{E}[X_\infty].$$

Example. Let $(S_n)_{n\geq 0}$ be the one-dimensional simple symmetric random walk started from $S_0 = 1$, and let

$$\tau := \inf\{n \geq 0 : S_n = 0\}.$$

Define

$$X_n := S_{n\wedge\tau}.$$

Why this works.

(i) **Martingale.** Since (S_n) is a martingale and τ is a stopping time, the stopped process $(S_{n\wedge\tau})$ is also a martingale.

(ii) **Uniform L^1 bound.** We have $X_n \geq 0$ because before hitting 0, the walk started from 1 cannot jump below 0 without first visiting 0. Therefore

$$\mathbb{E}[|X_n|] = \mathbb{E}[X_n] = \mathbb{E}[X_0] = 1 \qquad \text{for all } n,$$

so we may take $C = 1$.

(iii) **Almost sure convergence.** One-dimensional simple random walk is recurrent, so $\tau < \infty$ almost surely. Hence for all large enough n,

$$X_n = S_{n\wedge\tau} = S_\tau = 0.$$

Thus $X_n \to X_\infty = 0$ almost surely.

(iv) **Expectation drops in the limit.** We have

$$\mathbb{E}[X_0] = 1, \qquad \mathbb{E}[X_\infty] = 0.$$

So indeed

$$\mathbb{E}[X_0] \neq \mathbb{E}[X_\infty].$$

This example is the classical warning that an a.s.-convergent martingale with bounded first moments need *not* be uniformly integrable.

Grading note from the solution sheet. Any valid example with a complete justification deserves full credit. The stopped simple random walk above is exactly the example suggested in the handwritten solution.

Question 3 [20 points]

Consider a box with N balls, each coloured red or blue. At each round, we sample N times independently *with replacement* from the current box, and then replace the entire box by the sampled composition. Let X_t be the number of red balls after round t. Then

$$X_{t+1} = \sum_{j=1}^{N} Z_{t+1,j}, \qquad Z_{t+1,j} \mid X_t \overset{\text{i.i.d.}}{\sim} \mathrm{Ber}(X_t/N),$$

with fixed initial state $X_0 = x \in \{1, 2, \ldots, N-1\}$.

Part (1) **[10 pts]** Show that $(X_t)_{t\geq 0}$ is a martingale, and compute

$$\mathbb{P}\Big(\lim_{t\to\infty} X_t = 0\Big).$$

Solution. Conditioning on $\mathcal{F}_t$, each $Z_{t+1,j}$ has mean X_t/N. Therefore

$$\mathbb{E}[X_{t+1} \mid \mathcal{F}_t] = \sum_{j=1}^{N} \mathbb{E}[Z_{t+1,j} \mid \mathcal{F}_t] = N \cdot \frac{X_t}{N} = X_t.$$

So (X_t) is a martingale.

Also,

$$0 \leq X_t \leq N \qquad \text{for all } t,$$

so the martingale is bounded. Hence it is uniformly integrable, and therefore there exists a random variable X_∞ such that

$$X_t \to X_\infty \quad \text{a.s. and in } L^1.$$

Now each X_t is integer-valued. A convergent integer-valued sequence must eventually be constant, so the limit can only be a state at which the chain can remain forever. The only absorbing states are 0 and N. Indeed, if $1 \leq m \leq N-1$, then conditional on $X_t = m$, the law of X_{t+1} is $\mathrm{Bin}(N, m/N)$, which is not degenerate, so the chain cannot stay forever at m.

Thus

$$X_\infty \in \{0, N\} \qquad \text{a.s.}$$

Since convergence also holds in L^1,

$$\mathbb{E}[X_\infty] = \mathbb{E}[X_0] = x.$$

Write $p = \mathbb{P}(X_\infty = N)$. Then

$$\mathbb{E}[X_\infty] = Np + 0 \cdot (1-p) = Np = x,$$

so

$$\mathbb{P}(X_\infty = N) = \frac{x}{N}, \qquad \mathbb{P}(X_\infty = 0) = 1 - \frac{x}{N}.$$

Therefore

$$\mathbb{P}\Big(\lim_{t\to\infty} X_t = 0\Big) = 1 - \frac{x}{N}.$$

Part (2) **[10 pts]** Show that for every $t \geq 0$ and $x \in \{1, 2, \ldots, N-1\}$,

$$\mathbb{P}_x(1 \leq X_t \leq N-1) \leq x(N-x)\left(1 - \frac{1}{N}\right)^t.$$

Hint from the exam. Study the process

$$H_t := X_t(N - X_t).$$

Solution. Conditionally on X_t, the random variable X_{t+1} is $\mathrm{Bin}(N, p)$ with $p = X_t/N$. Hence

$$\mathbb{E}[X_{t+1} \mid \mathcal{F}_t] = X_t, \qquad \mathrm{Var}(X_{t+1} \mid \mathcal{F}_t) = Np(1-p) = X_t - \frac{X_t^2}{N}.$$

Therefore

$$\mathbb{E}[X_{t+1}^2 \mid \mathcal{F}_t] = \mathrm{Var}(X_{t+1} \mid \mathcal{F}_t) + \big(\mathbb{E}[X_{t+1} \mid \mathcal{F}_t]\big)^2 = X_t + \left(1 - \frac{1}{N}\right) X_t^2.$$

Now compute

$$\begin{aligned}
\mathbb{E}[H_{t+1} \mid \mathcal{F}_t] &= \mathbb{E}[X_{t+1}(N - X_{t+1}) \mid \mathcal{F}_t] \\
&= N\mathbb{E}[X_{t+1} \mid \mathcal{F}_t] - \mathbb{E}[X_{t+1}^2 \mid \mathcal{F}_t] \\
&= NX_t - \left(X_t + \left(1 - \frac{1}{N}\right) X_t^2\right) \\
&= \left(1 - \frac{1}{N}\right) X_t(N - X_t) \\
&= \left(1 - \frac{1}{N}\right) H_t.
\end{aligned}$$

Taking expectations recursively gives

$$\mathbb{E}[H_t] = \left(1 - \frac{1}{N}\right)^t H_0 = \left(1 - \frac{1}{N}\right)^t x(N-x).$$

Finally, because X_t is integer-valued,

$$1 \le X_t \le N-1 \quad \iff \quad H_t = X_t(N-X_t) \ge 1.$$

So by Markov's inequality,

$$\mathbb{P}_x(1 \le X_t \le N-1) = \mathbb{P}_x(H_t \ge 1) \le \mathbb{E}_x[H_t] = x(N-x)\left(1-\frac{1}{N}\right)^t.$$

This is exactly the desired bound.

> **Key idea.** The quantity $H_t = X_t(N-X_t)$ measures how far the chain is from the absorbing states 0 and N. The computation shows that its expectation decays geometrically, so the probability of still being in a non-absorbing state also decays geometrically.

Question 4 [25 points]

Let $(B_t)_{t\ge 0}$ be a Brownian motion.

Part (1) **[5 pts]** Let λ be a deterministic constant. If

$$M_t := e^{\lambda B_t} - 1 - \int_0^t f(B_s)\,ds$$

is a martingale, determine f, and write M_t as an Itô integral.

Solution. Apply Itô's formula to $g(x) = e^{\lambda x}$. Since

$$g'(x) = \lambda e^{\lambda x}, \qquad g''(x) = \lambda^2 e^{\lambda x},$$

we get

$$d(e^{\lambda B_t}) = lambdae^{\lambda B_t}\,dB_t + \frac{\lambda^2}{2}e^{\lambda B_t}\,dt.$$

So

$$e^{\lambda B_t} - 1 - \int_0^t \frac{\lambda^2}{2}e^{\lambda B_s}\,ds = \int_0^t \lambda e^{\lambda B_s}\,dB_s.$$

Therefore the required choice is

$$f(x) = \frac{\lambda^2}{2}e^{\lambda x},$$

and the martingale can be written as

$$M_t = \int_0^t \lambda e^{\lambda B_s}\,dB_s.$$

Part (2) **[10 pts]** Compute

$$\mathbb{P}\left(\max_{0\le t\le 1} B_t \ge 1,\ B_1 \le 0\right).$$

Solution. Let

$$\tau := \inf\{t \ge 0 : B_t = 1\}.$$

Then

$$\left\{\max_{0\le t\le 1} B_t \ge 1,\ B_1 \le 0\right\} = \{\tau \le 1,\ B_1 \le 0\}.$$

Now reflect the Brownian path after time τ. Under this reflection, the terminal value transforms by

$$B_1 \longmapsto 2 - B_1.$$

Hence paths with $\tau \le 1$ and $B_1 \le 0$ are in one-to-one correspondence with paths satisfying $B_1 \ge 2$. This is exactly the reflection principle in this form. Therefore

$$\mathbb{P}\left(\max_{0\le t\le 1} B_t \ge 1,\ B_1 \le 0\right) = \mathbb{P}(B_1 \ge 2).$$

Since $B_1 \sim N(0,1)$,

$$\mathbb{P}(B_1 \ge 2) = \int_2^\infty \frac{1}{\sqrt{2\pi}} e^{-x^2/2}\,dx.$$

So the answer is

$$\boxed{\int_2^\infty \frac{1}{\sqrt{2\pi}} e^{-x^2/2}\,dx.}$$

Part (3) **[10 pts]** Let

$$\tau := \inf\{t \ge 0 : |B_t| \ge 1\}.$$

Compute $\mathrm{var}(\tau)$.

Solution. The hint suggests starting from

$$Z_t := B_t^4 - 6tB_t^2.$$

Using Itô's formula,

$$d(B_t^4) = 4B_t^3\,dB_t + 6B_t^2\,dt,$$

and

$$d(6tB_t^2) = 6B_t^2\,dt + 12tB_t\,dB_t + 6t\,dt.$$

Subtracting,

$$dZ_t = (4B_t^3 - 12tB_t)\,dB_t - 6t\,dt.$$

Therefore

$$Z_t + 3t^2 = B_t^4 - 6tB_t^2 + 3t^2$$

is a martingale.

Now stop at τ. Since $|B_\tau| = 1$, we have

$$B_\tau^2 = 1, \qquad B_\tau^4 = 1.$$

Applying optional stopping to the martingale above gives

$$\mathbb{E}\big[B_\tau^4 - 6\tau B_\tau^2 + 3\tau^2\big] = 0,$$

so

$$1 - 6\mathbb{E}[\tau] + 3\mathbb{E}[\tau^2] = 0.$$

We also know from the standard martingale $B_t^2 - t$ that

$$\mathbb{E}[\tau] = 1.$$

Substituting this into the previous identity gives

$$1 - 6 + 3\mathbb{E}[\tau^2] = 0 \quad \Longrightarrow \quad 3\mathbb{E}[\tau^2] = 5 \quad \Longrightarrow \quad \mathbb{E}[\tau^2] = \frac{5}{3}.$$

Hence

$$\mathrm{var}(\tau) = \mathbb{E}[\tau^2] - (\mathbb{E}[\tau])^2 = \frac{5}{3} - 1 = \frac{2}{3}.$$

So

$$\boxed{\mathrm{var}(\tau) = \frac{2}{3}.}$$

Question 5 [16 points]

Part (1) [8 pts] Let $(B_t)_{t\geq 0}$ be a standard Brownian motion, and suppose $(X_t)_{t\geq 0}$ starts from $X_0 = x$ and satisfies

$$dX_t = -X_t\,dt + dB_t.$$

Show that X_t is normally distributed for every $t > 0$, and compute its mean and variance.

Solution. Introduce the integrating factor

$$Z_t := e^t X_t.$$

Since e^t is deterministic, Itô's product rule gives

$$dZ_t = e^t\,dX_t + e^t X_t\,dt = e^t(-X_t\,dt + dB_t) + e^t X_t\,dt = e^t\,dB_t.$$

Integrating from 0 to t,

$$Z_t = x + \int_0^t e^s\,dB_s.$$

Therefore

$$X_t = e^{-t}x + e^{-t}\int_0^t e^s\,dB_s = e^{-t}x + \int_0^t e^{-(t-s)}\,dB_s.$$

Now the stochastic integral on the right has a *deterministic* integrand, so it is Gaussian with mean 0 and variance

$$\int_0^t e^{-2(t-s)}\,ds = e^{-2t}\int_0^t e^{2s}\,ds = e^{-2t}\cdot\frac{e^{2t}-1}{2} = \frac{1}{2}\big(1-e^{-2t}\big).$$

Hence X_t is Gaussian with

$$\mathbb{E}[X_t] = e^{-t}x, \qquad \mathrm{Var}(X_t) = \frac{1}{2}\big(1-e^{-2t}\big).$$

So the final description is

$$X_t \sim N\left(e^{-t}x,\ \frac{1}{2}(1-e^{-2t})\right).$$

Part (2) [8 pts] Let $(X_n)_{n\geq 0}$ be a discrete-time stochastic process such that $\mathbb{E}[|X_n|] < \infty$ and

$$\mathbb{E}[X_{n+1} \mid \mathcal{F}_n] \leq X_n \qquad \text{for all } n.$$

So (X_n) is a supermartingale. Assume also that $X_n \geq 0$ almost surely for every n. Prove that

$$X_n \to X_\infty \qquad \text{almost surely}$$

for some random variable X_∞.

Solution by upcrossings. Because (X_n) is a nonnegative supermartingale,

$$\mathbb{E}[X_n] \leq \mathbb{E}[X_0] \qquad \text{for all } n,$$

so the process is bounded in L^1.

Fix rational numbers $0 < a < b < \infty$, and let $U_n[a,b]$ be the number of upcrossings of the interval $[a,b]$ completed by time n. As in the proof of the martingale convergence theorem, construct the usual predictable betting strategy that holds one unit of stock while trying to complete an upcrossing from a to b. Let G_n be the associated gains process. Since (X_n) is a supermartingale, this gains process is also a supermartingale, so

$$\mathbb{E}[G_n] \leq 0.$$

On the other hand, pathwise one has the standard lower bound

$$G_n \geq (b-a)U_n[a,b] - (X_n - a)^+.$$

Taking expectations yields

$$(b-a)\,\mathbb{E}[U_n[a,b]] \leq \mathbb{E}[(X_n-a)^+] \leq \mathbb{E}[X_n] \leq \mathbb{E}[X_0].$$

Thus

$$\sup_{n\geq 0} \mathbb{E}[U_n[a,b]] < \infty.$$

Therefore the total number of upcrossings of every rational interval $[a,b]$ is finite almost surely.

Now suppose $\liminf X_n < \limsup X_n$ on some event of positive probability. Then there exist rationals $a < b$ such that the sample path makes infinitely many upcrossings of $[a,b]$, contradicting the previous conclusion. Hence

$$\liminf_{n\to\infty} X_n = \limsup_{n\to\infty} X_n \qquad \text{a.s.}$$

so X_n converges almost surely to some extended random variable $X_\infty \in [0,\infty]$.

Finally, Fatou's lemma gives

$$\mathbb{E}\big[\liminf_{n\to\infty} X_n\big] \leq \liminf_{n\to\infty} \mathbb{E}[X_n] \leq \mathbb{E}[X_0] < \infty.$$

Therefore $X_\infty < \infty$ almost surely. So there exists a finite random variable X_∞ such that

$$X_n \to X_\infty \qquad \text{a.s.}$$

which is exactly what we wanted to prove.

Big picture. This is the supermartingale version of the martingale convergence theorem. Nonnegativity gives a uniform L^1 bound from above, and the upcrossing argument forces the sample paths to settle down to a limit.

STA447/2006: Midterm Exam #2

Instructor: Wenlong Mou
Date: March 22, 2024
Total marks: 100 points
Time allowed: 105 minutes

This section is a fully typed and expanded version of the posted Midterm #2 solution. I keep the original structure of the exam, but I add the missing reasoning and the main ideas behind each step, so that the file reads like study notes rather than just an answer key.

Question 1 [30 points]

Mark each statement True or False.

(1) **Statement.** For a discrete-time stochastic process $(X_n)_{n=0,1,2,\dots}$, if T_1 and T_2 are both stopping times, then T_1T_2 is a stopping time.

Answer: True.

Explanation. In discrete time, to check that T_1T_2 is a stopping time, it is enough to show that

$$\{T_1T_2 \le n\} \in \mathcal{F}_n \qquad \text{for every } n \in \mathbb{N}.$$

But

$$\{T_1T_2 \le n\} = \bigcup_{k=0}^{n} \Big(\{T_1 = k\} \cap \{T_2 \le \lfloor n/k \rfloor\} \Big),$$

with the obvious harmless adjustment when $k = 0$. Since T_1 and T_2 are stopping times, the events $\{T_1 = k\}$ and $\{T_2 \le m\}$ are measurable with respect to $\mathcal{F}_k$ and $\mathcal{F}_m$, and both sigma-fields are contained in $\mathcal{F}_n$. Hence the whole union belongs to $\mathcal{F}_n$.

(2) **Statement.** For a Brownian motion $(B_t)_{t\ge0}$, if T_1 and T_2 are both stopping times, then T_1T_2 is a stopping time.

Answer: False.

Explanation. The discrete-time argument above uses the fact that there are only finitely many time indices up to n. In continuous time, that argument breaks down. A standard counterexample is to take a nontrivial stopping time τ and look at τ^2. Then

$$\{\tau^2 \le t\} = \{\tau \le \sqrt{t}\},$$

and when $0 < t < 1$, this event depends on the Brownian path up to time $\sqrt{t} > t$, so it need not be $\mathcal{F}_t$-measurable. Thus the product of two stopping times need not be a stopping time in continuous time.

(3) **Statement.** Let $(X_n)_{n\ge0}$ be a discrete-time martingale. For any stopping time T such that

$\mathbb{P}(T < \infty) = 1$, we have

$$\mathbb{E}[X_T] = \mathbb{E}[X_0].$$

Answer: False.

Explanation. Almost sure finiteness of T is not enough for optional stopping. One also needs extra assumptions such as boundedness of T, uniform integrability, or suitable integrability bounds on the stopped process. A standard counterexample is the simple random walk S_n started from 0, with

$$T = \inf\{n \geq 0 : S_n = 1\}.$$

Then $T < \infty$ almost surely by recurrence, but

$$\mathbb{E}[S_T] = 1 \neq 0 = \mathbb{E}[S_0].$$

(4) **Statement.** Let $(X_n)_{n\geq 0}$ be a discrete-time martingale. If for every fixed n,

$$\lim_{K\to\infty} \mathbb{E}\big[|X_n|\mathbf{1}_{\{|X_n|\geq K\}}\big] = 0,$$

then $(X_n)_{n\geq 0}$ is uniformly integrable.

Answer: False.

Explanation. Uniform integrability requires a bound that is uniform in n:

$$\lim_{K\to\infty} \sup_n \mathbb{E}\big[|X_n|\mathbf{1}_{\{|X_n|\geq K\}}\big] = 0.$$

The condition in the statement only says that each *individual* random variable X_n is integrable. A standard martingale counterexample is

$$X_n = S_{n\wedge T}, \qquad T = \inf\{m \geq 0 : S_m = 1\},$$

where S_n is a simple random walk started from 0. For each fixed n, X_n is bounded, so the displayed limit holds. But the martingale is not uniformly integrable, because $X_n \to 1$ almost surely while $\mathbb{E}[X_n] = 0$ for all n.

(5) **Statement.** Let $(X_n)_{n\geq 0}$ be a discrete-time irreducible and aperiodic Markov chain on a countably infinite state space $S \subseteq \mathbb{R}$. If (X_n) is also a nonnegative martingale that converges almost surely to X_∞, then the chain has a stationary distribution π, and $X_\infty \sim \pi$.

Answer: False.

Explanation. There are two problems here. First, an irreducible countably infinite chain need not have a stationary distribution at all: it may be null recurrent or transient. Second, even if a stationary distribution exists, the limit law X_∞ need not equal π unless the chain is started in stationarity. So the conclusion is too strong and is not implied by the hypotheses.

(6) **Statement.** If $(X_t)_{t\geq 0}$ is a martingale and T is a stopping time, then $(X_{t\wedge T})_{t\geq 0}$ is also a martingale.

Answer: True.

Explanation. This is exactly the stopped-martingale theorem: stopping a martingale at a stopping time preserves the martingale property (under the standard integrability assumptions that are built into the course definition).

(7) **Statement.** Let $(B_t)_{t\geq 0}$ be a Brownian motion and let

$$T := \inf\{t > 0 : B_t = 0\}.$$

Then $T = 0$ with probability 1.

Answer: True.

Explanation. Brownian motion starts at 0, and with probability 1 it returns to 0 arbitrarily soon after time 0. Therefore the first strictly positive return time has infimum 0, so $T = 0$ almost surely.

(8) **Statement.** Let $(B_t)_{t\geq 0}$ be a Brownian motion and let f be continuously differentiable. Then

$$\mathbb{E}[f(B_t)] = \mathbb{E}\left[\int_0^t f'(B_s)\, dB_s\right].$$

Answer: False.

Explanation. The right-hand side is the expectation of an Itô integral, so it equals 0. In general the left-hand side is not 0. For example, if $f(x) = x^2$, then

$$\mathbb{E}[f(B_t)] = \mathbb{E}[B_t^2] = t,$$

while

$$\mathbb{E}\left[\int_0^t 2B_s\, dB_s\right] = 0.$$

The correct identity comes from Itô's formula and involves a second-derivative term.

(9) **Statement.** Let $(X_t)_{t\geq 0}$ be a two-dimensional standard Brownian motion. With probability 1, for every $t > 0$, there exists $t' > t$ such that

$$\left\| X_{t'} - \begin{pmatrix} 100 \\ 100 \end{pmatrix} \right\|^2 \leq 10^{-2}.$$

Answer: True.

Explanation. Two-dimensional Brownian motion is recurrent: almost surely it visits every open ball infinitely many times. The set

$$\left\{ x \in \mathbb{R}^2 : \left\| x - \begin{pmatrix} 100 \\ 100 \end{pmatrix} \right\|^2 \leq 10^{-2} \right\}$$

is just a small ball centered at $(100, 100)$, so Brownian motion will enter it again after any given time t, almost surely.

(10) **Statement.** If $(B_t)_{t\geq 0}$ is a Brownian motion, then

$$\int_0^t B_s^2 \, dB_s$$

is normally distributed.

Answer: False.

Explanation. An Itô integral is automatically centered, but it is Gaussian only in special cases, for example when the integrand is deterministic. Here the integrand B_s^2 is random and depends on the same Brownian motion. Using Itô's formula for B_t^3,

$$d(B_t^3) = 3B_t^2 \, dB_t + 3B_t \, dt,$$

so

$$\int_0^t B_s^2 \, dB_s = \frac{1}{3} B_t^3 - \int_0^t B_s \, ds,$$

which is not a normal random variable.

Official answer pattern: $T, F, F, F, F, T, T, F, T, F$.

Question 2 [9 points]

Give an example of a martingale $(X_t)_{t\geq 0}$ such that

$$\sup_{t\geq 0} \mathbb{E}[|X_t|] \leq C \qquad \text{for some } C < \infty,$$

and $X_t \to X_\infty$ almost surely as $t \to \infty$, but

$$\mathbb{E}[X_0] \neq \mathbb{E}[X_\infty].$$

A valid example. Let $(S_n)_{n\geq 0}$ be a one-dimensional simple random walk started from $S_0 = 1$, and define

$$\tau := \inf\{n \geq 0 : S_n = 0\}.$$

Now set

$$X_n := S_{n\wedge\tau}.$$

Step 1: X_n is a martingale. The simple random walk S_n is a martingale. Since τ is a stopping time, the stopped process $(S_{n\wedge\tau})$ is also a martingale. Hence (X_n) is a martingale.

Step 2: the L^1 norms are uniformly bounded. Because the process is stopped when it hits 0, we have

$$X_n \geq 0 \qquad \text{for all } n.$$

Since (X_n) is a martingale and $X_0 = 1$,

$$\mathbb{E}[|X_n|] = \mathbb{E}[X_n] = 1 \qquad \text{for every } n.$$

So we may take $C = 1$.

Step 3: almost sure convergence. One-dimensional simple random walk is recurrent, so

$$\mathbb{P}(\tau < \infty) = 1.$$

Therefore for all sufficiently large n, we have $n \geq \tau$ and hence

$$X_n = S_\tau = 0.$$

So

$$X_n \to X_\infty = 0 \qquad \text{almost surely.}$$

Step 4: the expectations do not match. We have

$$\mathbb{E}[X_0] = 1, \qquad \mathbb{E}[X_\infty] = 0.$$

Thus

$$\mathbb{E}[X_0] \neq \mathbb{E}[X_\infty].$$

This example shows exactly why L^1-boundedness and almost sure convergence do *not* by themselves imply preservation of expectation at the limit. The missing ingredient is uniform integrability.

Question 3 [20 points]

Consider a box of N balls in two colours (red and blue). At each round we draw with replacement from the box N times independently, and we replace the box by the composition of these N draws. Let X_t be the number of red balls in round t. Then

$$X_{t+1} = \sum_{j=1}^{N} Z_{t+1,j}, \qquad Z_{t+1,j} \mid X_t \overset{\text{i.i.d.}}{\sim} \mathrm{Ber}(X_t/N).$$

Assume $X_0 = x \in \{1, 2, \ldots, N-1\}$.

Part (1) **[10 points]** Show that $(X_t)_{t\geq 0}$ is a martingale, and compute

$$\mathbb{P}\Big(\lim_{t\to\infty} X_t = 0\Big).$$

Step 1: martingale property. Conditioning on X_t,

$$\mathbb{E}[X_{t+1} \mid X_t] = \sum_{j=1}^{N} \mathbb{E}[Z_{t+1,j} \mid X_t] = N \cdot \frac{X_t}{N} = X_t.$$

So (X_t) is a martingale.

Step 2: bounded martingale convergence. Since $0 \le X_t \le N$ always, the martingale is bounded in L^∞, hence uniformly integrable. Therefore

$$X_t \to X_\infty \qquad \text{almost surely and in } L^1.$$

Step 3: identify the only possible limits. Each X_t takes values in the finite set $\{0, 1, \ldots, N\}$. If a sequence of integers converges, then it must eventually be constant. But the only absorbing states of the chain are 0 and N. Therefore

$$X_\infty \in \{0, N\} \qquad \text{almost surely.}$$

Step 4: use expectation to compute the probability. Since the martingale is uniformly integrable,

$$\mathbb{E}[X_\infty] = \mathbb{E}[X_0] = x.$$

Write

$$\mathbb{P}(X_\infty = N) = p.$$

Then

$$x = \mathbb{E}[X_\infty] = 0 \cdot (1-p) + N \cdot p = Np,$$

so

$$p = \frac{x}{N}.$$

Hence

$$\mathbb{P}(X_\infty = 0) = 1 - \frac{x}{N}.$$

Therefore

$$\boxed{\mathbb{P}\Big(\lim_{t\to\infty} X_t = 0\Big) = 1 - \frac{x}{N}.}$$

Rubric note from the posted solution. A correct answer without full rigorous justification would still receive almost full credit; showing only the martingale property earns partial credit.

Part (2) **[10 points]** Show that for every $t \ge 0$,

$$\mathbb{P}_x(1 \le X_t \le N-1) \le x(N-x)\left(1 - \frac{1}{N}\right)^t.$$

Hint used in the official solution: study

$$H_t := X_t(N - X_t).$$

Step 1: compute the conditional expectation of H_{t+1}. Given X_t, the random variable X_{t+1} is binomial:

$$X_{t+1} \mid X_t \sim \mathrm{Bin}\left(N, \frac{X_t}{N}\right).$$

So

$$\mathbb{E}[X_{t+1} \mid X_t] = X_t, \qquad \mathrm{Var}(X_{t+1} \mid X_t) = X_t\left(1 - \frac{X_t}{N}\right).$$

Now

$$H_{t+1} = X_{t+1}(N - X_{t+1}) = NX_{t+1} - X_{t+1}^2.$$

Therefore

$$\mathbb{E}[H_{t+1} \mid X_t] = N\mathbb{E}[X_{t+1} \mid X_t] - \mathbb{E}[X_{t+1}^2 \mid X_t].$$

Using

$$\mathbb{E}[X_{t+1}^2 \mid X_t] = \mathrm{Var}(X_{t+1} \mid X_t) + \big(\mathbb{E}[X_{t+1} \mid X_t]\big)^2,$$

we get

$$\begin{aligned}
\mathbb{E}[H_{t+1} \mid X_t] &= NX_t - \left[X_t\left(1 - \frac{X_t}{N}\right) + X_t^2\right] \\
&= NX_t - X_t + \frac{X_t^2}{N} - X_t^2 \\
&= \left(1 - \frac{1}{N}\right) X_t(N - X_t) \\
&= \left(1 - \frac{1}{N}\right) H_t.
\end{aligned}$$

Step 2: iterate the recursion. Taking expectations gives

$$\mathbb{E}[H_{t+1}] = \left(1 - \frac{1}{N}\right)\mathbb{E}[H_t].$$

By induction,

$$\mathbb{E}[H_t] = \left(1 - \frac{1}{N}\right)^t H_0 = \left(1 - \frac{1}{N}\right)^t x(N - x).$$

Step 3: relate H_t to the event of interest. We have

$$1 \le X_t \le N - 1 \quad \Longleftrightarrow \quad H_t = X_t(N - X_t) \ge 1.$$

Hence by Markov's inequality,

$$\mathbb{P}_x(1 \le X_t \le N - 1) = \mathbb{P}_x(H_t \ge 1) \le \mathbb{E}_x[H_t].$$

Substituting the formula above gives

$$\boxed{\mathbb{P}_x(1 \le X_t \le N-1) \le x(N-x)\left(1-\frac{1}{N}\right)^t.}$$

The process $H_t = X_t(N - X_t)$ measures how far the chain is from the absorbing states 0 and N. The recursion

$$\mathbb{E}[H_{t+1} \mid X_t] = \left(1 - \frac{1}{N}\right) H_t$$

shows that this quantity decays geometrically on average.

Question 4 [25 points]

Let $(B_t)_{t\ge 0}$ be a Brownian motion.

Part (1) **[5 points]** Let $\lambda \in \mathbb{R}$ be deterministic. Suppose

$$M_t := e^{\lambda B_t} - 1 - \int_0^t f(B_s)\,ds$$

is a martingale. Find f, and rewrite M_t as an Itô integral.

Solution. Apply Itô's formula to $g(x) = e^{\lambda x}$. Since

$$g'(x) = \lambda e^{\lambda x}, \qquad g''(x) = \lambda^2 e^{\lambda x},$$

we obtain

$$d(e^{\lambda B_t}) = \lambda e^{\lambda B_t}\,dB_t + \frac{\lambda^2}{2} e^{\lambda B_t}\,dt.$$

Integrating from 0 to t and using $B_0 = 0$ gives

$$e^{\lambda B_t} - 1 = \int_0^t \lambda e^{\lambda B_s}\,dB_s + \int_0^t \frac{\lambda^2}{2} e^{\lambda B_s}\,ds.$$

So the drift term must be exactly cancelled by $\int_0^t f(B_s)\,ds$. Therefore

$$\boxed{f(x) = \frac{\lambda^2}{2} e^{\lambda x}.}$$

Then

$$\boxed{M_t = \int_0^t \lambda e^{\lambda B_s}\,dB_s.}$$

Part (2) **[10 points]** Compute

$$\mathbb{P}\left(\max_{0\le t\le 1} B_t \ge 1,\ B_2 \le 0\right).$$

It is acceptable to leave the answer as an integral.

Step 1: introduce the first hitting time. Let

$$\tau := \inf\{t \ge 0 : B_t = 1\}.$$

Then the event $\{\max_{0\le t\le 1} B_t \ge 1\}$ is exactly $\{\tau \le 1\}$. So

$$\mathbb{P}\left(\max_{0\le t\le 1} B_t \ge 1,\ B_2 \le 0\right) = \mathbb{P}(\tau \le 1,\ B_2 \le 0).$$

Step 2: condition on τ. On $\{\tau \le 1\}$, we know $B_\tau = 1$. By the strong Markov property,

$$B_2 - B_\tau \mid \tau \sim \mathcal{N}(0,\, 2-\tau).$$

Hence

$$\mathbb{P}(B_2 \le 0 \mid \tau) = \mathbb{P}(B_2 - B_\tau \le -1 \mid \tau) = \Phi\left(-\frac{1}{\sqrt{2-\tau}}\right),$$

where Φ denotes the standard normal cdf. Therefore

$$\mathbb{P}(\tau \le 1,\ B_2 \le 0) = \mathbb{E}\left[\mathbf{1}_{\{\tau\le 1\}}\Phi\left(-\frac{1}{\sqrt{2-\tau}}\right)\right].$$

Step 3: use the reflection principle to identify the density of τ. For Brownian motion, the first passage time to level 1 has density

$$f_\tau(t) = \frac{1}{\sqrt{2\pi t^3}} e^{-1/(2t)}, \qquad t > 0.$$

This density is derived from the reflection principle. Therefore

$$\mathbb{P}\left(\max_{0\le t\le 1} B_t \ge 1,\ B_2 \le 0\right) = \int_0^1 \Phi\left(-\frac{1}{\sqrt{2-t}}\right) \frac{1}{\sqrt{2\pi t^3}} e^{-1/(2t)}\, dt.$$

So one acceptable final answer is

$$\boxed{\mathbb{P}\left(\max_{0\le t\le 1} B_t \ge 1,\ B_2 \le 0\right) = \int_0^1 \Phi\left(-\frac{1}{\sqrt{2-t}}\right) \frac{1}{\sqrt{2\pi t^3}} e^{-1/(2t)}\, dt.}$$

Comment. The essential ideas are:

- convert the maximum event into a hitting-time event;
- use the strong Markov property after the first hit;

- use the reflection principle to describe the law of the hitting time.

Part (3) **[10 points]** Let

$$\tau := \inf\{t \geq 0 : |B_t| \geq 1\}.$$

Compute $\mathrm{Var}(\tau)$.

Step 1: first compute $\mathbb{E}[\tau]$. Apply optional stopping to the martingale

$$B_t^2 - t.$$

Since $B_\tau^2 = 1$, we obtain

$$\mathbb{E}[B_\tau^2 - \tau] = \mathbb{E}[B_0^2] = 0,$$

hence

$$1 - \mathbb{E}[\tau] = 0, \qquad \text{so} \qquad \mathbb{E}[\tau] = 1.$$

Step 2: construct the fourth-order martingale. By Itô's formula,

$$d(B_t^4) = 4B_t^3\, dB_t + 6B_t^2\, dt.$$

A short calculation then shows that

$$M_t := B_t^4 - 6tB_t^2 + 3t^2$$

is a martingale. Indeed,

$$dM_t = 4(B_t^3 - 3tB_t)\, dB_t.$$

Step 3: stop at τ. At time τ, we have $B_\tau^2 = 1$ and $B_\tau^4 = 1$. Optional stopping gives

$$\mathbb{E}[M_\tau] = \mathbb{E}[M_0] = 0.$$

Therefore

$$\mathbb{E}\big[1 - 6\tau + 3\tau^2\big] = 0.$$

Using $\mathbb{E}[\tau] = 1$, this becomes

$$1 - 6 + 3\mathbb{E}[\tau^2] = 0,$$

so

$$3\mathbb{E}[\tau^2] = 5, \qquad \mathbb{E}[\tau^2] = \frac{5}{3}.$$

Step 4: compute the variance. Thus

$$\mathrm{Var}(\tau) = \mathbb{E}[\tau^2] - (\mathbb{E}[\tau])^2 = \frac{5}{3} - 1 = \boxed{\frac{2}{3}.}$$

A very standard workflow for Brownian stopping-time moments is:

$$\text{choose the right polynomial martingale} \longrightarrow \text{stop it at } \tau \longrightarrow \text{plug in } B_\tau.$$

Here $B_\tau^2 = 1$ makes everything collapse nicely.

Question 5 [16 points]

Prove the following statements.

Part (1) [8 points] Let $(B_t)_{t\geq 0}$ be standard Brownian motion. Suppose X_t starts from $X_0 = x$ and satisfies

$$dX_t = -X_t\,dt + dB_t.$$

Show that X_t is normally distributed for every $t > 0$, and compute its mean and variance.

Step 1: solve the SDE explicitly. This is a linear SDE, so multiply by e^t:

$$d(e^t X_t) = e^t\,dX_t + e^t X_t\,dt = e^t\,dB_t.$$

Integrating gives

$$e^t X_t = x + \int_0^t e^s\,dB_s,$$

hence

$$\boxed{X_t = xe^{-t} + \int_0^t e^{-(t-s)}\,dB_s.}$$

Step 2: identify the distribution. The stochastic integral

$$\int_0^t e^{-(t-s)}\,dB_s$$

has a deterministic integrand, so it is a centered Gaussian random variable. Therefore X_t is Gaussian as the sum of a constant and a Gaussian variable.

Step 3: compute the mean. Since the Itô integral has mean 0,

$$\mathbb{E}[X_t] = xe^{-t}.$$

Step 4: compute the variance. By Itô isometry,

$$\mathrm{Var}(X_t) = \mathbb{E}\left[\left(\int_0^t e^{-(t-s)}\,dB_s\right)^2\right] = \int_0^t e^{-2(t-s)}\,ds.$$

Compute the integral:

$$\int_0^t e^{-2(t-s)}\,ds = \int_0^t e^{-2u}\,du = \frac{1-e^{-2t}}{2}.$$

So

$$\boxed{X_t \sim \mathcal{N}\left(xe^{-t},\ \frac{1-e^{-2t}}{2}\right).}$$

Part (2) **[8 points]** Let $(X_n)_{n\geq 0}$ be a discrete-time process such that $\mathbb{E}[|X_n|] < \infty$ and

$$\mathbb{E}[X_{n+1} \mid \mathcal{F}_n] \leq X_n \qquad \text{for all } n.$$

So (X_n) is a supermartingale. Assume also that $X_n \geq 0$ almost surely for every n. Prove that there exists a random variable X_∞ such that

$$X_n \to X_\infty \qquad \text{almost surely.}$$

Idea. This is the supermartingale convergence theorem. Since the process is nonnegative, its expectations are automatically uniformly bounded:

$$0 \leq \mathbb{E}[X_n] \leq \mathbb{E}[X_0].$$

That is exactly the condition needed for the upcrossing argument.

Detailed proof via upcrossings. Fix rational numbers $0 \leq a < b$. Let $U_n[a,b]$ be the number of upcrossings of $[a,b]$ completed by the path $X_0, X_1, \ldots, X_n$.

For a nonnegative supermartingale, the upcrossing inequality gives

$$(b-a)\,\mathbb{E}[U_n[a,b]] \leq \mathbb{E}[(X_n - a)^-] + \mathbb{E}[(X_0 - a)^+].$$

Because $X_n \geq 0$, we have $(X_n - a)^- \leq a$, while $(X_0 - a)^+ \leq X_0$. Therefore

$$(b-a)\,\mathbb{E}[U_n[a,b]] \leq a + \mathbb{E}[X_0].$$

The right-hand side does not depend on n, so

$$\sup_n \mathbb{E}[U_n[a,b]] < \infty.$$

Letting $n \to \infty$ and using monotone convergence,

$$\mathbb{E}[U_\infty[a,b]] < \infty,$$

which implies

$$U_\infty[a,b] < \infty \qquad \text{almost surely.}$$

Since this holds for every rational interval $[a,b]$, the sample paths cannot oscillate forever between two different levels. Hence $X_n(\omega)$ must converge for almost every ω to some limit in $[0,\infty]$. Call that limit X_∞.

Finally, Fatou's lemma gives

$$\mathbb{E}[X_\infty] \leq \liminf_{n\to\infty} \mathbb{E}[X_n] \leq \mathbb{E}[X_0] < \infty.$$

So $X_\infty < \infty$ almost surely. Therefore

$$\boxed{X_n \to X_\infty \qquad \text{almost surely for some finite random variable } X_\infty.}$$

The nonnegativity assumption is the key simplification:

$$X_n \geq 0 \quad \Longrightarrow \quad \mathbb{E}[X_n] \leq \mathbb{E}[X_0].$$

That uniform L^1 bound feeds directly into the upcrossing argument and forces almost sure convergence.

STA447/2006: Midterm Exam #2

Instructor: Wenlong Mou
Date: March 11, 2026
Total marks: 100 points
Time allowed: 150 minutes

Question 1 [30 points]

Mark each of the following statements with T (true) or F (false). No justification is required.

(1) For a discrete-time stochastic process $(X_n)_{n=0,1,2,\ldots}$, if T_1 and T_2 are both stopping times satisfying $T_1 \geq T_2$, then $T_1 - T_2$ is a stopping time.
Answer: F

(2) Let T_1, T_2, T_3 be three stopping times. Let $T_{(2)}$ be the second smallest one among T_1, T_2, T_3. Then $T_{(2)}$ is a stopping time.
Answer: T

(3) Let

$$T := \min\{t \geq 10 : X_t = X_{t-10}\}.$$

The random time T is a stopping time.
Answer: T

(4) If $(Z_i)_{i\geq 0}$ are i.i.d. zero-mean random variables, then the process

$$X_n := \left(\sum_{i=1}^{n} Z_i\right)^2 - n\mathbb{E}[Z_0^2]$$

is a martingale.
Answer: T

(5) Let $(X_n)_{n\geq 0}$ be a discrete-time martingale such that $X_n \geq 0$ for all n. Then there exists a random variable X_∞ such that $X_n \to X_\infty$ almost surely.
Answer: T

(6) Let $(X_n)_{n=0,1,2,\ldots}$ be a discrete-time martingale. If for any $\varepsilon > 0$ and any $n \geq 0$, there exists a constant $K > 0$ depending on ε and n such that

$$\mathbb{E}\big[|X_n|\mathbf{1}_{\{|X_n|\geq K\}}\big] \leq \varepsilon,$$

then $(X_n)_{n\geq 0}$ is uniformly integrable.
Answer: F

(7) Let $(X_n)_{n=0,1,2,\ldots}$ be a martingale. If there exists a stopping time T such that

$$\mathbb{E}[X_T] = \mathbb{E}[X_0],$$

then $(X_n)_{n\geq 0}$ is uniformly integrable.
Answer: F

(8) Let
$$X_n := \mathbb{E}[X \mid \mathcal{F}_n]$$
for some random variable X and some filtration $(\mathcal{F}_n)_{n\geq 0}$, and let T be a stopping time. Then X_T is well-defined and
$$\mathbb{E}[X_T] = \mathbb{E}[X_0].$$
Answer: T

(9) Let $Z_1, Z_2, \ldots$ be i.i.d. random variables with finite mean μ. Let
$$X_n := \sum_{i=1}^{n} Z_i.$$
Let
$$T := \arg\max_{1\leq n\leq 10} X_n.$$
Then
$$\mathbb{E}[X_T] = \mu\mathbb{E}[T].$$
Answer: F

(10) Let $(X_n)_{n\geq 0}$ be a martingale satisfying
$$\sup_{n\geq 0} \mathbb{E}[|X_n|^2] < +\infty.$$
Then
$$\mathbb{E}\left[\sup_{n\geq 0} |X_n|^2\right] < +\infty.$$
Answer: T

Rubrics: Each item is worth 3 points. No justification is required, and no partial credit is given.

Question 2 [24 points]

Let $X_0 = 1$ and
$$X_t = W_t X_{t-1},$$
where W_t are i.i.d. random variables with distribution
$$W_t = \begin{cases} \frac{3}{2}, & \text{with probability } \frac{1}{2}, \\ \frac{1}{2}, & \text{with probability } \frac{1}{2}. \end{cases}$$
Define
$$T_a := \inf\{t > 0 : X_t \geq a\}$$

for some constant $a > 1$.

Part (a) [9 pts] Is $(X_t)_{t\geq 0}$ uniformly integrable? How about the stopped process $(X_{t\wedge T_a})_{t\geq 0}$? Justify your answer.

Answer: Since $\mathbb{E}[W_t] = 1$, we have

$$\mathbb{E}[X_t \mid \mathcal{F}_{t-1}] = X_{t-1}\mathbb{E}[W_t] = X_{t-1},$$

so $(X_t)_{t\geq 0}$ is a nonnegative martingale with

$$\mathbb{E}[X_t] = 1 \qquad \text{for all } t.$$

However,

$$\log X_t = \sum_{i=1}^{t} \log W_i,$$

and by the strong law of large numbers,

$$\frac{1}{t}\log X_t \to \frac{1}{2}\log\frac{3}{2} + \frac{1}{2}\log\frac{1}{2} = \frac{1}{2}\log\frac{3}{4} < 0 \qquad \text{a.s.}$$

Therefore

$$X_t \to 0 \qquad \text{a.s.}$$

If (X_t) were uniformly integrable, then by the martingale convergence theorem we would have

$$\mathbb{E}[X_\infty] = \lim_{t\to\infty} \mathbb{E}[X_t] = 1,$$

but $X_\infty = 0$ almost surely, a contradiction. Hence $(X_t)_{t\geq 0}$ is *not* uniformly integrable.

For the stopped process, if $t < T_a$, then $X_t < a$. On the event $\{T_a < +\infty\}$,

$$X_{T_a} = W_{T_a} X_{T_a - 1} \leq \frac{3}{2}a$$

because $X_{T_a-1} < a$ and $W_{T_a} \leq 3/2$. Hence

$$0 \leq X_{t\wedge T_a} \leq \frac{3}{2}a \qquad \text{for all } t.$$

So $(X_{t\wedge T_a})_{t\geq 0}$ is a bounded martingale, and therefore uniformly integrable.

Rubrics:

- 3 points for showing that $X_t \to 0$ almost surely, or giving an equivalent argument based on $\sum_{i=1}^{t} \log W_i$.
- 3 points for concluding that (X_t) is not uniformly integrable.
- 3 points for showing that $(X_{t\wedge T_a})$ is bounded, hence uniformly integrable.

Part (b) **[9 pts]** Show that

$$\frac{2}{3a} \leq \mathbb{P}(T_a < +\infty) \leq \frac{1}{a}.$$

Answer: By part (a), the stopped process $(X_{t\wedge T_a})_{t\geq 0}$ is uniformly integrable, so we can invoke the optional stopping theorem for possibly infinite stopping times to get

$$\mathbb{E}[X_{T_a}] = \mathbb{E}[X_0] = 1.$$

This can be rewritten as

$$1 = \mathbb{E}[X_{T_a}\mathbf{1}_{\{T_a<+\infty\}}] + \mathbb{E}[X_{T_a}\mathbf{1}_{\{T_a=+\infty\}}].$$

Since

$$X_{T_a} = \lim_{t\to\infty} X_{t\wedge T_a} = 0 \qquad \text{on } \{T_a = +\infty\},$$

we get

$$1 = \mathbb{E}[X_{T_a} \mid T_a < +\infty] \cdot \mathbb{P}(T_a < +\infty).$$

On the event $\{T_a < +\infty\}$, we have

$$a \leq X_{T_a} \leq \frac{3}{2}a.$$

Therefore,

$$a \leq \mathbb{E}[X_{T_a} \mid T_a < +\infty] \leq \frac{3}{2}a.$$

Substituting into the previous identity yields

$$\frac{2}{3a} \leq \mathbb{P}(T_a < +\infty) \leq \frac{1}{a}.$$

Rubrics:

- 4 points for correctly applying optional stopping to get $\mathbb{E}[X_{T_a}] = 1$.
- If you get the correct equation without justifying OST, you can still get 2 points for this part.
- 5 points for using $a \leq X_{T_a} \leq 3a/2$ on $\{T_a < +\infty\}$ to derive both bounds.
- If only one side is proved correctly, you get 3 points out of 5 for this part.

Part (c) **[6 pts]** Define the random variable

$$Z := \max_{t\geq 0} X_t.$$

Use the result in part (a) to show that

$$\mathbb{P}(Z < +\infty) = 1, \qquad \text{but} \qquad \mathbb{E}[Z] = +\infty.$$

Answer: From part (a), we know that

$$X_t \to 0 \qquad \text{a.s.}$$

Hence on every sample path there exists a random time N such that $X_t \leq 1$ for all $t \geq N$. Therefore

$$Z = \max_{t \geq 0} X_t = \max\{X_0, X_1, \ldots, X_{N-1}, \sup_{t \geq N} X_t\}$$

is finite almost surely. Thus

$$\mathbb{P}(Z < +\infty) = 1.$$

On the other hand, for every $a > 1$,

$$\{Z \geq a\} = \{T_a < +\infty\}.$$

So part (b) gives

$$\mathbb{P}(Z \geq a) = \mathbb{P}(T_a < +\infty) \geq \frac{2}{3a}.$$

Using the tail-sum lower bound for nonnegative random variables,

$$\mathbb{E}[Z] \geq \sum_{k=2}^{\infty} \mathbb{P}(Z \geq k) \geq \sum_{k=2}^{\infty} \frac{2}{3k} = +\infty.$$

Rubrics:

- 3 points for proving $Z < +\infty$ almost surely, for example from $X_t \to 0$ a.s.
- 3 points for proving $\mathbb{E}[Z] = +\infty$ using the lower tail bound from part (b) and a tail-sum argument.

Question 3 [21 points]

Let $(X_n)_{n \geq 0}$ be a one-dimensional symmetric simple random walk, i.e.

$$X_0 = 0, \qquad X_n = \sum_{i=1}^{n} Z_i,$$

where Z_i are i.i.d. random variables such that

$$\mathbb{P}(Z_i = 1) = \mathbb{P}(Z_i = -1) = \frac{1}{2}.$$

For $\theta \in \mathbb{R}$, define

$$\lambda(\theta) := \log\left(\frac{1}{2}e^{\theta} + \frac{1}{2}e^{-\theta}\right),$$

and define

$$M_n(\theta) := e^{\theta X_n - n\lambda(\theta)}.$$

Part (a) **[4 points]** Prove that $(M_n(\theta))_{n\geq 0}$ is a martingale for any $\theta \in \mathbb{R}$.

Answer: Let

$$\mathcal{F}_n = \sigma(Z_1, \ldots, Z_n).$$

Since $X_n = X_{n-1} + Z_n$, we have

$$\mathbb{E}[M_n(\theta) \mid \mathcal{F}_{n-1}] = \mathbb{E}\left[e^{\theta X_n - n\lambda(\theta)} \mid \mathcal{F}_{n-1}\right] = e^{\theta X_{n-1} - n\lambda(\theta)}\mathbb{E}[e^{\theta Z_n} \mid \mathcal{F}_{n-1}].$$

Now

$$\mathbb{E}[e^{\theta Z_n} \mid \mathcal{F}_{n-1}] = \frac{1}{2}e^{\theta} + \frac{1}{2}e^{-\theta} = e^{\lambda(\theta)}.$$

Hence

$$\mathbb{E}[M_n(\theta) \mid \mathcal{F}_{n-1}] = e^{\theta X_{n-1} - n\lambda(\theta)}e^{\lambda(\theta)} = e^{\theta X_{n-1} - (n-1)\lambda(\theta)} = M_{n-1}(\theta).$$

Therefore $(M_n(\theta))_{n\geq 0}$ is a martingale.

Rubrics:

- 2 points for conditioning on $\mathcal{F}_{n-1}$ and using $X_n = X_{n-1} + Z_n$.
- 2 points for computing $\mathbb{E}[e^{\theta Z_n}] = e^{\lambda(\theta)}$ and concluding the martingale property.

Part (b) **[9 points]** For a positive integer a, define the stopping time

$$T := \inf\{n > 0 : |X_n| \geq a\}.$$

Use the optional stopping theorem to show that

$$\mathbb{E}\left[e^{-\lambda(\theta)T}\right] = \frac{2}{e^{\theta a} + e^{-\theta a}}.$$

Answer: Let $\lambda = \lambda(\theta)$. Since T is the first time the walk exits

$$\{-a+1, \ldots, a-1\},$$

we have

$$|X_{n\wedge T}| \leq a \qquad \text{for every } n.$$

Hence

$$0 \leq M_{n\wedge T}(\theta) = e^{\theta X_{n\wedge T} - (n\wedge T)\lambda} \leq e^{|\theta| a}.$$

So $(M_{n\wedge T}(\theta))$ is bounded, and optional stopping gives

$$\mathbb{E}[M_T(\theta)] = \mathbb{E}[M_0(\theta)] = 1.$$

Next we show that X_T is independent of T. Since the walk moves by ± 1 and a is an integer, we must have

$$X_T \in \{-a, a\}.$$

For any fixed n, there is a sign-flip bijection between paths of length n with $T = n$ and $X_T = a$,

and paths of length n with $T = n$ and $X_T = -a$. Therefore

$$\mathbb{P}(T = n, X_T = a) = \mathbb{P}(T = n, X_T = -a) = \frac{1}{2}\mathbb{P}(T = n).$$

Thus X_T is independent of T, and

$$\mathbb{P}(X_T = a) = \mathbb{P}(X_T = -a) = \frac{1}{2}.$$

Now compute

$$1 = \mathbb{E}[M_T(\theta)] = \mathbb{E}[e^{\theta X_T - \lambda T}] = \mathbb{E}[e^{-\lambda T}]\,\mathbb{E}[e^{\theta X_T}].$$

Also,

$$\mathbb{E}[e^{\theta X_T}] = \frac{1}{2}e^{\theta a} + \frac{1}{2}e^{-\theta a}.$$

Therefore

$$1 = \mathbb{E}[e^{-\lambda T}] \cdot \frac{e^{\theta a} + e^{-\theta a}}{2},$$

so

$$\mathbb{E}[e^{-\lambda(\theta)T}] = \frac{2}{e^{\theta a} + e^{-\theta a}}.$$

Rubrics:

- 3 points for correctly applying optional stopping to the stopped martingale.
- 3 points for showing that X_T is independent of T, so that $\mathbb{P}(X_T = \pm a) = 1/2$.
- 3 points for computing $\mathbb{E}[M_T(\theta)]$ and deriving the formula.

Part (c) **[8 points]** Fix $\delta > 0$ and $n \in \mathbb{N}_+$. Show that

$$\mathbb{P}\left(\max_{0 \le t \le n} X_t \le \sqrt{2n\log(1/\delta)}\right) \ge 1 - \delta.$$

Hint: You may use without proof the calculus fact that

$$\frac{1}{2}e^{\theta} + \frac{1}{2}e^{-\theta} \le e^{\theta^2/2} \qquad \text{for any } \theta \in \mathbb{R}.$$

Answer: Fix $\theta > 0$ and $b > 0$. If

$$\max_{0 \le t \le n} X_t \ge b,$$

then for some $t \le n$,

$$M_t(\theta) = e^{\theta X_t - t\lambda(\theta)} \ge e^{\theta b - n\lambda(\theta)},$$

because $t \le n$ and $\lambda(\theta) \ge 0$. Therefore

$$\left\{\max_{0 \le t \le n} X_t \ge b\right\} \subseteq \left\{\max_{0 \le t \le n} M_t(\theta) \ge e^{\theta b - n\lambda(\theta)}\right\}.$$

Since $(M_t(\theta))_{0\le t\le n}$ is a nonnegative martingale, Doob's maximal inequality gives

$$\mathbb{P}\left(\max_{0\le t\le n} X_t \ge b\right) \le \mathbb{P}\left(\max_{0\le t\le n} M_t(\theta) \ge e^{\theta b - n\lambda(\theta)}\right) \le e^{-\theta b + n\lambda(\theta)}\mathbb{E}[M_n(\theta)].$$

But $\mathbb{E}[M_n(\theta)] = 1$, so

$$\mathbb{P}\left(\max_{0\le t\le n} X_t \ge b\right) \le e^{-\theta b + n\lambda(\theta)}.$$

Using the given inequality,

$$\lambda(\theta) = \log\left(\frac{1}{2}e^{\theta} + \frac{1}{2}e^{-\theta}\right) \le \frac{\theta^2}{2}.$$

Hence

$$\mathbb{P}\left(\max_{0\le t\le n} X_t \ge b\right) \le e^{-\theta b + n\theta^2/2}.$$

Choose

$$\theta = \frac{b}{n}.$$

Then

$$\mathbb{P}\left(\max_{0\le t\le n} X_t \ge b\right) \le e^{-b^2/(2n)}.$$

Now set

$$b = \sqrt{2n\log(1/\delta)}.$$

Then

$$\mathbb{P}\left(\max_{0\le t\le n} X_t \ge \sqrt{2n\log(1/\delta)}\right) \le \delta,$$

which is equivalent to

$$\mathbb{P}\left(\max_{0\le t\le n} X_t \le \sqrt{2n\log(1/\delta)}\right) \ge 1-\delta.$$

Rubrics:

- 4 points for reducing the event $\{\max_{t\le n} X_t \ge b\}$ to a maximal event for $M_t(\theta)$ and applying Doob's inequality.
- 2 points for using $\lambda(\theta) \le \theta^2/2$ to obtain an exponential bound.
- 2 points for optimizing in θ and substituting $b = \sqrt{2n\log(1/\delta)}$.

Question 4 [9 points]

Let p be a probability distribution on $\{0, 1, 2, \dots\}$ satisfying

$$\mathbb{E}_{Z\sim p}[Z] = 1.$$

Consider a stochastic process $(X_n)_{n\geq 0}$ defined as follows:

$$X_0 = 1, \qquad X_n = \sum_{i=1}^{X_{n-1}} Z_{n,i} \quad (n \geq 1),$$

where the $Z_{n,i}$ are i.i.d. with law p and independent of X_{n-1}. If $X_n = 0$ for some n, then $X_m = 0$ for all $m > n$.

Assuming that p is not the degenerate distribution putting all its mass on 1, show that

$$\mathbb{P}(\text{the process goes extinct}) = 1.$$

Answer: Let

$$\mathcal{F}_n = \sigma(Z_{k,i} : k \leq n,\ i \geq 1).$$

Since the $Z_{n,i}$ are i.i.d. with mean 1 and are independent of X_{n-1},

$$\mathbb{E}[X_n \mid \mathcal{F}_{n-1}] = \mathbb{E}\left[\sum_{i=1}^{X_{n-1}} Z_{n,i} \,\middle|\, \mathcal{F}_{n-1}\right] = X_{n-1} \cdot \mathbb{E}[Z] = X_{n-1}.$$

Hence $(X_n)_{n\geq 0}$ is a martingale.

Since $X_n \geq 0$ for all n and

$$\sup_n \mathbb{E}[X_n] = \mathbb{E}[X_0] = 1 < \infty,$$

it is a nonnegative L^1-bounded martingale. By the martingale convergence theorem,

$$X_n \to X_\infty \qquad \text{a.s.}$$

for some nonnegative random variable X_∞.

Now $X_n \in \{0, 1, 2, \dots\}$ for every n. A sequence of integers can converge only if it is eventually constant. So almost surely,

$$X_n = X_\infty \qquad \text{for all sufficiently large } n.$$

For $k \geq 1$, if $X_n = k$, then

$$X_{n+1} = \sum_{i=1}^{k} Z_{n+1,i},$$

which has mean k and variance

$$k \operatorname{Var}(Z) > 0,$$

since p is not degenerate at 1. Therefore X_{n+1} is not almost surely equal to k. So k is not an absorbing state and cannot be the eventual constant value of the process. Hence

$$\mathbb{P}(X_\infty = k) = 0 \qquad \text{for every } k \geq 1.$$

Therefore

$$X_\infty = 0 \qquad \text{a.s.}$$

So the process goes extinct with probability 1.

Rubrics:

- 4 points for identifying (X_n) as a nonnegative martingale and applying the martingale convergence theorem to obtain an a.s. limit X_∞.
- 3 points for arguing that X_∞ is integer-valued and therefore eventually constant.
- 2 points for showing that the only possible eventual constant value is zero.

Question 5 [16 points]

Sum of independent random variables

Part (a) [8 points] Let $(X_n)_{n\geq 0}$ be i.i.d. normal random variables with mean 0 and variance 1. Define

$$S_n = \sum_{i=1}^{n} X_i^2.$$

Fix $a > 0$, and define the stopping time

$$T := \inf\{n > 0 : |X_n| \geq a\}.$$

Compute $\mathbb{E}[S_T]$. You may express the answer using the cumulative distribution function Φ of the standard normal distribution.

Answer: Let

$$p := \mathbb{P}(|X_1| \geq a) = 2(1 - \Phi(a)).$$

Since the X_n are i.i.d., the stopping time T is geometric with success probability p. Thus

$$\mathbb{E}[T] = \frac{1}{p} = \frac{1}{2(1 - \Phi(a))}.$$

Now

$$S_T = \sum_{i=1}^{T} X_i^2,$$

and the X_i^2 are i.i.d., nonnegative, with mean

$$\mathbb{E}[X_1^2] = 1.$$

Therefore Wald's identity gives

$$\mathbb{E}[S_T] = \mathbb{E}[T]\mathbb{E}[X_1^2] = \frac{1}{2(1 - \Phi(a))}.$$

Rubrics:

- 3 points for identifying T as a geometric random variable with parameter $2(1-\Phi(a))$.
- 5 points for correctly applying Wald's identity, or an equivalent argument, to obtain

$$\mathbb{E}[S_T] = \frac{1}{2(1-\Phi(a))}.$$

Part (b) **[8 points]** Let $(Y_n)_{n\geq 0}$ be i.i.d. random variables with

$$\mathbb{P}(Y_n = 1) = \mathbb{P}(Y_n = -1) = \frac{1}{2}.$$

Define

$$Z_n := \sum_{i=1}^{n} 2^{i-1} Y_i.$$

Define the stopping time

$$T := \inf\{n > 0 : Y_n > 0\}.$$

Compute $\mathbb{E}[T]$, and show that

$$\mathbb{E}[Z_T] \neq \mathbb{E}[Z_0].$$

Answer: Since T is the first time that $Y_n = 1$, it is geometric with parameter $1/2$. Hence

$$\mathbb{E}[T] = \frac{1}{1/2} = 2.$$

On the event $\{T = t\}$, we must have

$$Y_1 = Y_2 = \cdots = Y_{t-1} = -1, \qquad Y_t = 1.$$

Therefore

$$Z_T = \sum_{i=1}^{t-1} 2^{i-1}(-1) + 2^{t-1} = -\sum_{i=1}^{t-1} 2^{i-1} + 2^{t-1}.$$

Since

$$\sum_{i=1}^{t-1} 2^{i-1} = 2^{t-1} - 1,$$

we get

$$Z_T = -(2^{t-1} - 1) + 2^{t-1} = 1.$$

So

$$Z_T = 1 \qquad \text{a.s.}$$

and hence

$$\mathbb{E}[Z_T] = 1.$$

But

$$Z_0 = 0,$$

so

$$\mathbb{E}[Z_T] = 1 \neq 0 = \mathbb{E}[Z_0].$$

Rubrics:

- 3 points for correctly computing $\mathbb{E}[T] = 2$.
- 5 points for showing that $Z_T = 1$ almost surely and therefore $\mathbb{E}[Z_T] \neq \mathbb{E}[Z_0]$.

11. Lecture 8

11.1. From one-dimensional simple random walk to Brownian motion

A useful way to motivate Brownian motion is to start from the one-dimensional simple random walk

$$X_n = \sum_{i=1}^{n} \varepsilon_i,$$

where

$$\varepsilon_i = \begin{cases} +1, & \text{with probability } \frac{1}{2}, \\ -1, & \text{with probability } \frac{1}{2}. \end{cases}$$

The first basic scaling statement is the central limit theorem:

$$\frac{X_n}{\sqrt{n}} \xrightarrow{d} \mathcal{N}(0,1).$$

However, if we want a continuous-time limit, then convergence at a single time is not enough. We want the joint behavior of the process at several times.

Fix

$$0 \le t_1 < t_2 < \cdots < t_k < \infty, \qquad n_i = \lfloor n t_i \rfloor.$$

Then

$$X_{n_1}, \quad X_{n_2} - X_{n_1}, \quad \ldots, \quad X_{n_k} - X_{n_{k-1}}$$

are sums of disjoint blocks of i.i.d. increments, hence they are independent. After scaling by $1/\sqrt{n}$, each block satisfies a central limit theorem:

$$\frac{X_{n_1}}{\sqrt{n}} \xrightarrow{d} \mathcal{N}(0, t_1), \qquad \frac{X_{n_2} - X_{n_1}}{\sqrt{n}} \xrightarrow{d} \mathcal{N}(0, t_2 - t_1),$$

and similarly for the later increments.

Therefore,

$$\frac{1}{\sqrt{n}} \begin{pmatrix} X_{n_1} \\ X_{n_2} - X_{n_1} \\ \vdots \\ X_{n_k} - X_{n_{k-1}} \end{pmatrix} \xrightarrow{d} \mathcal{N}\left(0, \begin{pmatrix} t_1 & 0 & \cdots & 0 \\ 0 & t_2 - t_1 & \cdots & 0 \\ \vdots & \vdots & \ddots & \vdots \\ 0 & 0 & \cdots & t_k - t_{k-1} \end{pmatrix}\right).$$

Equivalently, the vector

$$\frac{1}{\sqrt{n}} \big(X_{\lfloor n t_1 \rfloor}, X_{\lfloor n t_2 \rfloor}, \ldots, X_{\lfloor n t_k \rfloor} \big)$$

should converge to a centered Gaussian vector whose covariance is determined by

$$\mathrm{Cov}(B_s, B_t) = \min\{s, t\}.$$

This leads to the heuristic scaling-limit picture

$$\left(\frac{1}{\sqrt{n}}X_{\lfloor nt\rfloor} : 0 \le t \le T\right) \rightsquigarrow (B_t : 0 \le t \le T),$$

where the limit process is Brownian motion.

Brownian motion can be viewed heuristically as the scaling limit of simple random walk:

$$\frac{1}{\sqrt{n}}X_{\lfloor nt\rfloor} \rightsquigarrow B_t.$$

Its covariance structure is

$$\mathrm{Cov}(B_s, B_t) = \min\{s, t\}.$$

11.2. Descriptive definition of Brownian motion

Definition 11.1 (Brownian motion / Wiener process)**.** A stochastic process $(B_t)_{t\ge 0}$ is called a *Brownian motion* if:

1. $$B_0 = 0.$$

2. For every $t_1, \dots, t_k \ge 0$, the random vector

   $$(B_{t_1}, B_{t_2}, \dots, B_{t_k})$$

   is multivariate normal.

3. For every $t > s$,

   $$B_t - B_s \sim \mathcal{N}(0, t-s),$$

   and $B_t - B_s$ is independent of the past process

   $$(B_r)_{0\le r\le s}.$$

4. The sample paths $t \mapsto B_t(\omega)$ are continuous almost surely.

A process satisfying property (2) is called a *Gaussian process*. Brownian motion is the most important example.

Condition (3) says two things at once:

- increments over a time interval of length $t - s$ are Gaussian with mean 0 and variance $t - s$;
- increments after time s are independent of everything observed up to time s.

The existence of such a process can be proved using the Kolmogorov extension theorem together with a continuity theorem, but in these notes Brownian motion is taken as a fundamental object.

11.3. Brownian motion is Markov and strong Markov

Let

$$\mathcal{F}_t = \sigma(B_s : 0 \le s \le t)$$

be the natural filtration generated by Brownian motion.

Proposition 11.2 (Markov property)**.** *For every fixed $t \ge 0$,*

$$(B_r : r > t) \perp\!\!\!\perp (B_r : 0 \le r \le t) \mid B_t.$$

Equivalently, conditional on the present value B_t, the future is independent of the past.

Idea. For every $r > t$,

$$B_r = B_t + (B_r - B_t).$$

The increment $B_r - B_t$ is independent of $\mathcal{F}_t$ by independent increments. Thus the future process can be written as the current position plus a fresh independent Brownian increment process. □

In fact the same statement still holds when the deterministic time t is replaced by a stopping time. This is the *strong Markov property.*

Remark 11.3. The strong Markov property is the key tool in the reflection principle and many hitting-time arguments. Intuitively, if we stop Brownian motion at a random time determined by the past, then after that time the process restarts like a fresh Brownian motion, independent of what came before.

11.4. Brownian motion is a martingale

Proposition 11.4. *$(B_t)_{t\ge 0}$ is a martingale with respect to $(\mathcal{F}_t)$.*

Proof. First,

$$\mathbb{E}[|B_t|] < \infty$$

for every $t \ge 0$, because $B_t \sim \mathcal{N}(0, t)$.

Now let $0 \le s < t$. Since

$$B_t = B_s + (B_t - B_s),$$

and $B_t - B_s$ is independent of $\mathcal{F}_s$ with mean 0, we get

$$\mathbb{E}[B_t \mid \mathcal{F}_s] = B_s + \mathbb{E}[B_t - B_s \mid \mathcal{F}_s] = B_s.$$

So (B_t) is a martingale. □

11.5. Continuous-time stopping times

The continuous-time version of a stopping time is the natural analogue of the discrete-time one.

Definition 11.5 (Stopping time)**.** A random time T is called a *stopping time* with respect to $(\mathcal{F}_t)$ if for every $t \geq 0$,

$$\{T \leq t\} \in \mathcal{F}_t.$$

This means that by looking only at the information available up to time t, one can decide whether the random time T has already occurred.

Typical examples for Brownian motion are hitting times such as

$$T_a = \inf\{t \geq 0 : B_t \geq a\},$$

or

$$T = \inf\{t \geq 0 : B_t = -a \text{ or } B_t = b\}.$$

The main properties of stopping times from discrete time extend to the continuous-time setting.

11.6. Continuous-time optional stopping theorem

Theorem 11.6 (Continuous-time OST)**.** *Let $(X_t)_{t\geq 0}$ be a continuous-time martingale with continuous sample paths, and let T be a stopping time such that*

$$\mathbb{P}(T < \infty) = 1.$$

Suppose:

(i)

$$\mathbb{E}[|X_T|] < \infty,$$

(ii)

$$\lim_{t\to\infty} \mathbb{E}\big[|X_t|\, \mathbf{1}_{\{T\geq t\}}\big] = 0.$$

Then

$$\mathbb{E}[X_T] = \mathbb{E}[X_0].$$

A common sufficient substitute for the tail condition is uniform integrability. In applications one typically constructs a convenient martingale and then checks the hypotheses for a carefully chosen stopping time.

11.7. Application: continuous-time gambler's ruin for Brownian motion

Let $(B_t)_{t\geq 0}$ be Brownian motion, and fix $a, b > 0$. Define

$$T = \inf\{t \geq 0 : B_t = -a \text{ or } B_t = b\}.$$

This is the continuous-time analogue of gambler's ruin: starting from 0, the process moves continuously until it first hits one of the two barriers $-a$ or b.

Because Brownian paths are continuous, at time T we must have

$$B_T \in \{-a, b\}.$$

11.7.1 The hitting probability

Before time T, the path stays inside $(-a, b)$, hence

$$|B_t| \le a \vee b \qquad \text{for all } t \le T.$$

So the stopped process $(B_{t\wedge T})$ is bounded, and therefore optional stopping applies to the martingale B_t. We get

$$\mathbb{E}[B_T] = \mathbb{E}[B_0] = 0.$$

Let

$$p = \mathbb{P}(B_T = b).$$

Then

$$\mathbb{P}(B_T = -a) = 1 - p,$$

and therefore

$$0 = \mathbb{E}[B_T] = b\,p - a(1-p).$$

Solving,

$$bp - a + ap = 0 \quad \Longrightarrow \quad (a+b)p = a.$$

Hence

$$\mathbb{P}(B_T = b) = \frac{a}{a+b}, \qquad \mathbb{P}(B_T = -a) = \frac{b}{a+b}.$$

For

$$T = \inf\{t \ge 0 : B_t = -a \text{ or } B_t = b\},$$

one has

$$\mathbb{P}(B_T = b) = \frac{a}{a+b}, \qquad \mathbb{P}(B_T = -a) = \frac{b}{a+b}.$$

11.7.2 A second martingale

A second useful Brownian martingale is

$$M_t = B_t^2 - t.$$

Proposition 11.7. *$(B_t^2 - t)_{t\ge 0}$ is a martingale.*

Proof. Let $0 \le s < t$. Then

$$B_t = B_s + (B_t - B_s),$$

so

$$B_t^2 = B_s^2 + 2B_s(B_t - B_s) + (B_t - B_s)^2.$$

Taking conditional expectation given $\mathcal{F}_s$, and using independence of $B_t - B_s$ from $\mathcal{F}_s$, mean 0, and variance $t - s$, we obtain

$$\mathbb{E}[B_t^2 \mid \mathcal{F}_s] = B_s^2 + 0 + (t - s).$$

Therefore

$$\mathbb{E}[B_t^2 - t \mid \mathcal{F}_s] = B_s^2 - s.$$

□

11.7.3 Why OST applies to M_t

To use optional stopping for M_t, we need to check a tail condition. On the event $\{t \le T\}$, the process has not yet hit either boundary by time t, so

$$|B_t| \le a \vee b.$$

Hence on $\{t \le T\}$,

$$|M_t| = |B_t^2 - t| \le (a \vee b)^2 + t \le (a \vee b)^2 + T.$$

Thus

$$\mathbb{E}\big[|M_t| \, \mathbf{1}_{\{T \ge t\}}\big] \le \mathbb{E}\big[\big((a \vee b)^2 + T\big)\mathbf{1}_{\{T \ge t\}}\big] .$$

So it is enough to show $\mathbb{E}[T] < \infty$. The lecture notes indicate the same geometric/block argument as in the discrete-time Markov chain case: there exist constants $c > 0$ and $t_0 > 0$ such that

$$\mathbb{P}(T \ge kt_0) \le (1 - c)^k \qquad \text{for all } k \ge 1.$$

Indeed, starting from any point $x \in (-a, b)$, there is a strictly positive probability, uniformly bounded below, that Brownian motion hits either $-a$ or b within time t_0. Iterating this over time blocks gives an exponential tail bound. Consequently

$$\mathbb{E}[T] < \infty.$$

This implies

$$\mathbb{E}\big[T \, \mathbf{1}_{\{T \ge t\}}\big] \to 0 \qquad \text{as } t \to \infty,$$

so the OST hypotheses are satisfied for M_t.

Proposition 11.8 (Exponential tail bound for the exit time)**.** *Let*

$$T := \inf\{t \ge 0 : B_t \notin (-a, b)\},$$

and for $x \in (-a, b)$, write $\mathbb{P}_x$ and $\mathbb{E}_x$ for probability and expectation conditional on $B_0 = x$. Then there exist constants $c > 0$ and $t_0 > 0$, depending only on a and b, such that for every $x \in (-a, b)$ and every $k \ge 1$,

$$\mathbb{P}_x(T \ge kt_0) \le (1 - c)^k.$$

In particular,

$$\mathbb{E}_x[T] < \infty, \qquad \mathbb{E}_x\big[T\,\mathbf{1}_{\{T\geq t\}}\big] \to 0 \quad \text{as } t \to \infty.$$

Consequently,

$$\mathbb{E}\big[|M_t|\,\mathbf{1}_{\{T\geq t\}}\big] \to 0,$$

so the optional stopping hypotheses are satisfied for $M_t = B_t^2 - t$.

Proof. Fix $t_0 > 0$, and set

$$L := a + b.$$

If $|B_{t_0} - x| \geq L$, then $B_{t_0} \notin (-a, b)$. Indeed, if $B_{t_0} - x \geq a + b$, then

$$B_{t_0} \geq x + a + b > -a + a + b = b,$$

while if $B_{t_0} - x \leq -(a + b)$, then

$$B_{t_0} \leq x - (a + b) < b - (a + b) = -a.$$

Since Brownian paths are continuous, the event $\{B_{t_0} \notin (-a, b)\}$ implies $\{T \leq t_0\}$. Therefore, for every $x \in (-a, b)$,

$$\mathbb{P}_x(T \leq t_0) \geq \mathbb{P}_x\big(|B_{t_0} - x| \geq a + b\big).$$

But under $\mathbb{P}_x$, the increment $B_{t_0} - x$ has distribution $N(0, t_0)$, so

$$\mathbb{P}_x\big(|B_{t_0} - x| \geq a + b\big) = \mathbb{P}\big(|N(0, t_0)| \geq a + b\big) =: c > 0.$$

Hence

$$\inf_{x\in(-a,b)} \mathbb{P}_x(T \leq t_0) \geq c, \qquad \sup_{x\in(-a,b)} \mathbb{P}_x(T > t_0) \leq 1 - c.$$

Now let $k \geq 0$. By the Markov property at time kt_0,

$$\begin{aligned}\mathbb{P}_x\big(T > (k+1)t_0\big) &= \mathbb{E}_x\big[\mathbf{1}_{\{T>kt_0\}}\mathbb{P}_x\big(T > (k+1)t_0 \mid \mathcal{F}_{kt_0}\big)\big] \\ &= \mathbb{E}_x\Big[\mathbf{1}_{\{T>kt_0\}}\mathbb{P}_{B_{kt_0}}(T > t_0)\Big].\end{aligned}$$

On the event $\{T > kt_0\}$, we have $B_{kt_0} \in (-a, b)$, so

$$\mathbb{P}_{B_{kt_0}}(T > t_0) \leq 1 - c.$$

Thus

$$\mathbb{P}_x\big(T > (k+1)t_0\big) \leq (1 - c)\,\mathbb{P}_x(T > kt_0).$$

Iterating gives

$$\mathbb{P}_x(T > kt_0) \leq (1 - c)^k,$$

and therefore also

$$\mathbb{P}_x(T \geq kt_0) \leq (1 - c)^k.$$

To show integrability, use the tail formula:

$$\mathbb{E}_x[T] = \int_0^\infty \mathbb{P}_x(T > t)\, dt.$$

Splitting the integral into blocks of length t_0,

$$\begin{aligned}\mathbb{E}_x[T] &= \sum_{k=0}^{\infty} \int_{kt_0}^{(k+1)t_0} \mathbb{P}_x(T > t)\, dt \\ &\le \sum_{k=0}^{\infty} t_0\, \mathbb{P}_x(T > kt_0) \\ &\le t_0 \sum_{k=0}^{\infty} (1-c)^k = \frac{t_0}{c} < \infty.\end{aligned}$$

Since $T \in L^1$, dominated convergence gives

$$\mathbb{E}_x\left[T\, \mathbf{1}_{\{T \ge t\}}\right] \to 0 \qquad \text{as } t \to \infty.$$

Finally, on $\{t \le T\}$ we have already shown that

$$|M_t| = |B_t^2 - t| \le (a \vee b)^2 + T.$$

Therefore

$$\mathbb{E}\left[|M_t|\, \mathbf{1}_{\{T \ge t\}}\right] \le (a \vee b)^2\, \mathbb{P}(T \ge t) + \mathbb{E}\left[T\, \mathbf{1}_{\{T \ge t\}}\right].$$

The first term tends to 0 by the exponential tail bound, and the second tends to 0 by the previous paragraph. Hence

$$\mathbb{E}\left[|M_t|\, \mathbf{1}_{\{T \ge t\}}\right] \to 0.$$

So the optional stopping theorem applies to M_t. □

11.7.4]

Computing $\mathbb{E}[T]$

Applying optional stopping to $M_t = B_t^2 - t$ at time T, we get

$$0 = \mathbb{E}[M_0] = \mathbb{E}[M_T] = \mathbb{E}[B_T^2] - \mathbb{E}[T].$$

Hence

$$\mathbb{E}[T] = \mathbb{E}[B_T^2].$$

But B_T takes only the values $-a$ and b, so

$$\mathbb{E}[B_T^2] = b^2\, \mathbb{P}(B_T = b) + (-a)^2\, \mathbb{P}(B_T = -a).$$

Substituting the probabilities found earlier,

$$\mathbb{E}[B_T^2] = b^2 \frac{a}{a+b} + a^2 \frac{b}{a+b} = \frac{ab(a+b)}{a+b} = ab.$$

Therefore

$$\mathbb{E}[T] = ab.$$

For

$$T = \inf\{t \geq 0 : B_t = -a \text{ or } B_t = b\},$$

we have

$$\mathbb{E}[T] = ab.$$

Remark 11.9. The lecture notes also point out that one can go further and compute moments or Laplace transforms such as

$$\mathbb{E}[e^{-\lambda T}],$$

although that is not developed here.

11.8. Reflection principle

Let $a > 0$, and define the first hitting time of level a by

$$T_a = \inf\{t \geq 0 : B_t \geq a\}.$$

We want to compute the distribution of T_a, i.e.

$$\mathbb{P}(T_a \leq t) \qquad \text{for } t > 0.$$

Because Brownian paths are continuous,

$$\{T_a \leq t\} = \left\{ \max_{0 \leq s \leq t} B_s \geq a \right\}.$$

11.8.1 Decomposing the event

The event $\{T_a \leq t\}$ can be split into two disjoint cases:

$$\{T_a \leq t\} = \{T_a \leq t,\ B_t < a\} \cup \{T_a \leq t,\ B_t \geq a\}.$$

Since B_t has a continuous distribution,

$$\mathbb{P}(B_t = a) = 0,$$

so there is no ambiguity at the boundary.

The second case is simply

$$\{B_t \geq a\},$$

because if the endpoint is already above a, the path must have hit a somewhere before time t. Thus

$$\mathbb{P}(T_a \leq t,\ B_t \geq a) = \mathbb{P}(B_t \geq a).$$

The reflection argument shows that the first case has the same probability as the second case.

11.8.2 A rigorous argument using strong Markov

We compute

$$\mathbb{P}(B_t \geq a) = \mathbb{P}(T_a \leq t)\,\mathbb{P}(B_t \geq a \mid T_a \leq t).$$

To evaluate the conditional probability, note that on the event $\{T_a \leq t\}$, we have $B_{T_a} = a$. Therefore

$$\{B_t \geq a\} = \{B_t - B_{T_a} \geq 0\}.$$

By the strong Markov property, conditional on $\{T_a \leq t\}$, the process

$$(B_{T_a+u} - B_{T_a})_{u\geq 0}$$

is a fresh Brownian motion, independent of the past. So

$$\mathbb{P}(B_t - B_{T_a} \geq 0 \mid T_a \leq t) = \frac{1}{2}.$$

Hence

$$\mathbb{P}(B_t \geq a) = \frac{1}{2}\,\mathbb{P}(T_a \leq t),$$

which implies

$$\mathbb{P}(T_a \leq t) = 2\,\mathbb{P}(B_t \geq a).$$

Since $B_t \sim \mathcal{N}(0,t)$,

$$\mathbb{P}(B_t \geq a) = \mathbb{P}\left(\frac{B_t}{\sqrt{t}} \geq \frac{a}{\sqrt{t}}\right) = 1 - \Phi\left(\frac{a}{\sqrt{t}}\right) = \Phi\left(-\frac{a}{\sqrt{t}}\right).$$

Therefore

$$\mathbb{P}(T_a \leq t) = 2\Phi\left(-\frac{a}{\sqrt{t}}\right).$$

For every $a > 0$ and $t > 0$,

$$\mathbb{P}(T_a \le t) = 2\,\mathbb{P}(B_t \ge a) = 2\Phi\left(-\frac{a}{\sqrt{t}}\right).$$

Equivalently,

$$\mathbb{P}\left(\max_{0\le s\le t} B_s \ge a\right) = 2\mathbb{P}(B_t \ge a).$$

11.8.3 A more detailed joint-distribution identity

The reflection principle can be sharpened to compute the joint distribution of (T_a, B_t). Fix $b < a$. Then

$$\mathbb{P}(T_a \le t,\ B_t \le b) = \mathbb{P}(B_t \ge 2a - b).$$

Here is the calculation. Start with

$$\mathbb{P}(T_a \le t,\ B_t \le b) = \mathbb{P}(T_a \le t)\,\mathbb{P}(B_t \le b \mid T_a \le t).$$

Since $B_{T_a} = a$,

$$\{B_t \le b\} = \{B_t - B_{T_a} \le -(a-b)\}.$$

By symmetry of Brownian increments,

$$\mathbb{P}(B_t - B_{T_a} \le -(a-b) \mid T_a \le t) = \mathbb{P}(B_t - B_{T_a} \ge a - b \mid T_a \le t).$$

Again by the strong Markov property, the increment after T_a is a fresh Brownian motion, so

$$\mathbb{P}(B_t - B_{T_a} \ge a - b \mid T_a \le t) = \mathbb{P}(T_a \le t,\ B_t \ge 2a - b)\Big/\mathbb{P}(T_a \le t).$$

Hence

$$\mathbb{P}(T_a \le t,\ B_t \le b) = \mathbb{P}(T_a \le t,\ B_t \ge 2a - b).$$

But the event $\{B_t \ge 2a - b\}$ already implies $\{T_a \le t\}$, because $2a - b > a$. Therefore

$$\mathbb{P}(T_a \le t,\ B_t \ge 2a - b) = \mathbb{P}(B_t \ge 2a - b).$$

So we conclude

$$\mathbb{P}(T_a \le t,\ B_t \le b) = \mathbb{P}(B_t \ge 2a - b), \qquad b < a.$$

11.8.4 A corollary

Taking $b \uparrow a$ in the preceding identity gives

$$\mathbb{P}(T_a \le t) = 2\mathbb{P}(B_t \ge a).$$

This can also be written as

$$\mathbb{P}(T_a \le t) = \mathbb{P}(|B_t| \ge a).$$

Since

$$\{T_a \le t\} = \left\{ \max_{0 \le s \le t} B_s \ge a \right\},$$

we obtain

$$\mathbb{P}\left(\max_{0 \le s \le t} B_s \ge a \right) = \mathbb{P}(|B_t| \ge a) \qquad (\forall a > 0).$$

Hence

$$\max_{0 \le s \le t} B_s \stackrel{d}{=} |B_t|.$$

A standard corollary of the reflection principle is

$$\max_{0 \le s \le t} B_s \stackrel{d}{=} |B_t|.$$

11.8.5 Formal Statement of Reflection Principle

Theorem 11.10 (Reflection Principle)**.** *Let $(B_t)_{t \ge 0}$ be a standard Brownian motion, and let $a > 0$. Then for every $t > 0$ and every $x \le a$,*

$$\mathbb{P}\left(\max_{0 \le s \le t} B_s \ge a,\ B_t \le x \right) = \mathbb{P}(B_t \ge 2a - x).$$

In particular,

$$\mathbb{P}\left(\max_{0 \le s \le t} B_s \ge a \right) = 2\,\mathbb{P}(B_t \ge a).$$

Corollary 11.11 (Distribution of the First Hitting Time)**.** Let

$$T_a = \inf\{t \ge 0 : B_t \ge a\}, \qquad a > 0.$$

Then for every $t > 0$,

$$\mathbb{P}(T_a \le t) = \mathbb{P}\left(\max_{0 \le s \le t} B_s \ge a \right) = 2\,\mathbb{P}(B_t \ge a).$$

Since $B_t \sim N(0, t)$, it follows that

$$\mathbb{P}(T_a \le t) = 2\left(1 - \Phi\left(\frac{a}{\sqrt{t}}\right)\right),$$

where Φ denotes the standard normal distribution function. Equivalently,

$$\mathbb{P}(T_a > t) = 2\Phi\left(\frac{a}{\sqrt{t}}\right) - 1.$$

Proof. Because Brownian paths are continuous,

$$\{T_a \le t\} = \left\{ \max_{0 \le s \le t} B_s \ge a \right\}.$$

Therefore, by the reflection principle,

$$\mathbb{P}(T_a \le t) = \mathbb{P}\left(\max_{0 \le s \le t} B_s \ge a \right) = 2\,\mathbb{P}(B_t \ge a).$$

Finally, since $B_t \sim N(0, t)$,

$$\mathbb{P}(B_t \ge a) = 1 - \Phi\left(\frac{a}{\sqrt{t}} \right),$$

which gives

$$\mathbb{P}(T_a \le t) = 2\left(1 - \Phi\left(\frac{a}{\sqrt{t}} \right) \right).$$

□

11.9. Stochastic calculus: why ordinary calculus breaks down

The goal is to make sense of a "calculus" for Brownian motion. A first difficulty is that Brownian paths are far too rough for ordinary differentiation.

For small $\Delta t > 0$,

$$B_{t+\Delta t} - B_t \sim \mathcal{N}(0, \Delta t),$$

so

$$\frac{B_{t+\Delta t} - B_t}{\Delta t} \sim \mathcal{N}\left(0, \frac{1}{\Delta t} \right).$$

Therefore the variance of the difference quotient blows up as $\Delta t \to 0$:

$$\operatorname{Var}\left(\frac{B_{t+\Delta t} - B_t}{\Delta t} \right) = \frac{1}{\Delta t} \to \infty.$$

So Brownian motion is not differentiable in the ordinary sense. In fact, almost surely Brownian paths are continuous everywhere but differentiable nowhere.

11.10. The practical problem: define $\int_0^t Y_s \, dB_s$

In practice we want to define

$$\int_0^t Y_s \, dB_s,$$

where $(Y_t)_{t \ge 0}$ is an adapted stochastic process, meaning that Y_t is determined by the Brownian path up to time t.

For an ordinary Riemann integral,

$$\int_0^T f(t)\,dt = \lim_{\Delta t \to 0} \sum_{i=0}^{N-1} f(\xi_i)\Delta t,$$

and the limit is independent of the sample points ξ_i.

For an ordinary Stieltjes integral with a sufficiently nice integrator g,

$$\int_0^T f(t)\,dg(t) = \lim_{\Delta t \to 0} \sum_{i=0}^{N-1} f(\xi_i)\big(g((i+1)\Delta t) - g(i\Delta t)\big),$$

again with a limit independent of the sample-point choice.

The lecture notes emphasize that for Brownian motion this independence fails:

$$\int_0^T Y_s\,dB_s \neq \lim_{\Delta t \to 0} \sum_{i=0}^{N-1} Y_{\xi_i}\big(B_{(i+1)\Delta t} - B_{i\Delta t}\big)$$

unless we specify *how* the sample points ξ_i are chosen.

11.11. Detailed example: $Y_t = B_t$

Consider

$$Y_t = B_t \qquad (\forall t),$$

and the candidate integral

$$\int_0^T B_t\,dB_t.$$

Take the Riemann-type sum

$$S_N(\xi) = \sum_{i=0}^{N-1} \big(B_{(i+1)\Delta t} - B_{i\Delta t}\big)\, B_{\xi_i}, \qquad \Delta t = \frac{T}{N}.$$

We now compare different choices of the sample points ξ_i.

11.11.1 Decomposition of the sum

For each interval $[i\Delta t, (i+1)\Delta t]$, write

$$B_{\xi_i} = B_{i\Delta t} + \big(B_{\xi_i} - B_{i\Delta t}\big).$$

Then

$$S_N(\xi) = \sum_{i=0}^{N-1} \big(B_{(i+1)\Delta t} - B_{i\Delta t}\big) B_{i\Delta t} + \sum_{i=0}^{N-1} \big(B_{(i+1)\Delta t} - B_{i\Delta t}\big)\big(B_{\xi_i} - B_{i\Delta t}\big).$$

Call the two pieces

$$S_N(\xi) = \text{Term 1} + \text{Term 2}.$$

11.11.2 Left-endpoint choice

If we choose the left endpoint

$$\xi_i = i\Delta t,$$

then

$$B_{\xi_i} - B_{i\Delta t} = 0,$$

so

$$\text{Term 2} = 0.$$

Thus the left-endpoint sum is

$$S_N^{\text{left}} = \sum_{i=0}^{N-1} B_{i\Delta t}\big(B_{(i+1)\Delta t} - B_{i\Delta t}\big).$$

This is the Itô choice.

11.11.3 Midpoint choice

Now choose the midpoint

$$\xi_i = \left(i + \frac{1}{2}\right)\Delta t.$$

Then

$$\text{Term 2} = \sum_{i=0}^{N-1} \big(B_{(i+1)\Delta t} - B_{i\Delta t}\big)\big(B_{(i+\frac{1}{2})\Delta t} - B_{i\Delta t}\big).$$

Write

$$A_i = B_{(i+\frac{1}{2})\Delta t} - B_{i\Delta t}, \qquad C_i = B_{(i+1)\Delta t} - B_{(i+\frac{1}{2})\Delta t}.$$

Then

$$B_{(i+1)\Delta t} - B_{i\Delta t} = A_i + C_i,$$

so the i-th summand in Term 2 is

$$(A_i + C_i)A_i = A_i^2 + A_iC_i.$$

Because Brownian increments over disjoint subintervals are independent,

$$A_i \sim \mathcal{N}\left(0, \frac{\Delta t}{2}\right), \qquad C_i \sim \mathcal{N}\left(0, \frac{\Delta t}{2}\right), \qquad A_i \perp C_i.$$

Hence

$$\mathbb{E}[A_iC_i] = 0, \qquad \mathbb{E}[A_i^2] = \frac{\Delta t}{2}.$$

Therefore the expectation of each summand is

$$\mathbb{E}[(A_i + C_i)A_i] = \frac{\Delta t}{2}.$$

The lecture notes then use the strong law of large numbers: the terms in the summation are i.i.d., each with mean $\Delta t/2$, so summing N such terms gives approximately

$$N \cdot \frac{\Delta t}{2} = N \cdot \frac{T}{2N} = \frac{T}{2}.$$

Thus

$$\text{Term } 2 \to \frac{T}{2} \qquad \text{(in the sense indicated in the notes)},$$

not 0.

So the midpoint rule and the left-endpoint rule do *not* lead to the same limit.

For the example $Y_t = B_t$,

$$\sum_{i=0}^{N-1} B_{\xi_i}\big(B_{(i+1)\Delta t} - B_{i\Delta t}\big)$$

depends on the choice of ξ_i. In particular:

- left endpoints give one limit;
- midpoints produce an extra contribution of size $T/2$.

So different sampling rules lead to different stochastic integrals.

Remark 11.12. This is the fundamental reason one must specify a convention in stochastic calculus. The Itô convention uses left endpoints. Another important convention, leading to the Stratonovich integral, uses symmetric or midpoint-type approximations.

11.12. Why choose left endpoints? Martingale and L^2-isometry

The lecture motivates the left-endpoint rule by analogy with discrete-time martingales and betting strategies.

Suppose $(X_t)_{t\geq 0}$ is a discrete-time martingale, and $(Y_t)_{t\geq 0}$ is an adapted process (a "betting strategy"). Define

$$M_t = \sum_{k=0}^{t-1} Y_k(X_{k+1} - X_k).$$

Then M_t is again a martingale, because the multiplier Y_k is chosen using information available at time k, before the increment $X_{k+1} - X_k$ occurs.

Moreover, in the simple random walk case,

$$\mathbb{E}[M_t^2] = \sum_{k=0}^{t-1} \mathbb{E}\big[Y_k^2 (X_{k+1} - X_k)^2\big] .$$

So using left endpoints naturally preserves two very useful properties:

- the martingale property;
- an L^2-isometry.

The Itô integral is designed to preserve exactly these two features.

11.13. Roadmap for defining the Itô integral

We proceed in two steps:

1. Define the integral for piecewise-constant adapted processes.
2. Extend the definition to more general adapted continuous processes by L^2-approximation.

11.14. Step 1: piecewise-constant adapted processes

Let

$$0 = t_0 < t_1 < \cdots < t_n$$

be deterministic times, and let

$$Y_t = Y^{(i)} \qquad \text{for } t \in [t_i, t_{i+1}),$$

where each random variable $Y^{(i)}$ is $\mathcal{F}_{t_i}$-measurable.

So Y is piecewise constant, and on each interval $[t_i, t_{i+1})$, its value is chosen using only information available at the left endpoint t_i.

For such a process, define

$$\int_0^T Y_t \, dB_t := \sum_{t_{i+1} \le T} Y^{(i)} (B_{t_{i+1}} - B_{t_i}) + Y^{(i_0)} (B_T - B_{t_{i_0}}),$$

where

$$i_0 = \max\{i : t_i \le T\}.$$

This is exactly the left-endpoint construction.

11.14.1 Martingale property

For piecewise-constant adapted Y, the process

$$\left(\int_0^t Y_s \, dB_s\right)_{t\geq 0}$$

is a martingale.

The reason is the same as in discrete time: on each interval, the coefficient multiplying the increment is measurable with respect to the past, while the Brownian increment has conditional mean 0.

11.14.2 Itô isometry for simple processes

For piecewise-constant adapted Y,

$$\mathbb{E}\left[\left(\int_0^T Y_t \, dB_t\right)^2\right] = \int_0^T \mathbb{E}[Y_t^2] \, dt.$$

Computation. Write

$$\int_0^T Y_t \, dB_t = \sum_{i=0}^{n-1} Y^{(i)}(B_{t_{i+1}} - B_{t_i}).$$

Squaring gives

$$\left(\sum_{i=0}^{n-1} Y^{(i)} \Delta B_i\right)^2 = \sum_{i=0}^{n-1} (Y^{(i)})^2 (\Delta B_i)^2 + 2\sum_{i<j} Y^{(i)} Y^{(j)} \Delta B_i \Delta B_j,$$

where

$$\Delta B_i = B_{t_{i+1}} - B_{t_i}.$$

The cross terms vanish in expectation because disjoint Brownian increments are independent and centered. Thus

$$\mathbb{E}\left[\left(\int_0^T Y_t \, dB_t\right)^2\right] = \sum_{i=0}^{n-1} \mathbb{E}\left[(Y^{(i)})^2 (\Delta B_i)^2\right].$$

Since $Y^{(i)}$ is $\mathcal{F}_{t_i}$-measurable and ΔB_i is independent of $\mathcal{F}_{t_i}$ with variance $t_{i+1} - t_i$,

$$\mathbb{E}\left[(Y^{(i)})^2 (\Delta B_i)^2\right] = \mathbb{E}[(Y^{(i)})^2](t_{i+1} - t_i).$$

So

$$\mathbb{E}\left[\left(\int_0^T Y_t \, dB_t\right)^2\right] = \sum_{i=0}^{n-1} \mathbb{E}[(Y^{(i)})^2](t_{i+1} - t_i) = \int_0^T \mathbb{E}[Y_t^2] \, dt.$$

□

For piecewise-constant adapted Y,

$$\left(\int_0^t Y_s\, dB_s\right)_{t\geq 0} \text{ is a martingale,}$$

and

$$\mathbb{E}\left[\left(\int_0^T Y_t\, dB_t\right)^2\right] = \int_0^T \mathbb{E}[Y_t^2]\, dt.$$

11.15. Step 2: extension to adapted continuous processes

Now let $(Y_t)_{t\geq 0}$ be an adapted process with continuous sample paths.

Fix $T > 0$, and for each $n \geq 1$, let

$$\Delta t = \frac{T}{n}.$$

Define the piecewise-constant approximation

$$Y_t^{(n)} = Y_{i\Delta t} \qquad \text{for } t \in [i\Delta t, (i+1)\Delta t).$$

Since Y is continuous, piecewise-constant functions are dense in the relevant L^2 sense:

$$\lim_{n\to\infty} \int_0^T \mathbb{E}\left[\left|Y_t - Y_t^{(n)}\right|^2\right] dt = 0.$$

Therefore,

$$\lim_{m,n\to\infty} \int_0^T \mathbb{E}\left[\left|Y_t^{(m)} - Y_t^{(n)}\right|^2\right] dt = 0.$$

Using the isometry for simple processes,

$$\mathbb{E}\left[\left|\int_0^T Y_t^{(m)}\, dB_t - \int_0^T Y_t^{(n)}\, dB_t\right|^2\right] = \int_0^T \mathbb{E}\left[\left|Y_t^{(m)} - Y_t^{(n)}\right|^2\right] dt \to 0.$$

So the sequence

$$\left(\int_0^T Y_t^{(n)}\, dB_t\right)_{n\geq 1}$$

is Cauchy in L^2, and therefore converges in L^2.

Definition 11.13 (Itô integral)**.** We define

$$\int_0^T Y_t\, dB_t$$

to be the L^2-limit of the integrals of piecewise-constant adapted approximations $Y^{(n)}$.

This limit is called the *Itô integral*.

11.16. Basic properties of the Itô integral

The properties valid for the approximating simple processes pass to the limit.

Theorem 11.14 (Basic properties of the Itô integral)**.** *Let Y be adapted with continuous sample paths and*

$$\int_0^T \mathbb{E}[Y_t^2]\,dt < \infty.$$

Then:

1. *The process*

$$\left(\int_0^t Y_s\,dB_s\right)_{t\geq 0}$$

   is a martingale.

2. *The Itô isometry holds:*

$$\mathbb{E}\left[\left(\int_0^T Y_s\,dB_s\right)^2\right] = \int_0^T \mathbb{E}[Y_s^2]\,ds.$$

3. *The integral is linear:*

$$\int_0^t (aY_s^{(1)} + bY_s^{(2)})\,dB_s = a\int_0^t Y_s^{(1)}\,dB_s + b\int_0^t Y_s^{(2)}\,dB_s.$$

Remark 11.15. The lecture notes emphasize that the left-endpoint convention is not arbitrary. It is chosen specifically because it preserves the martingale property and the L^2-isometry, which are the continuous-time analogues of the key discrete-time betting-strategy identities.

11.17. Summary

Lecture 8 introduces Brownian motion and the first ideas of stochastic calculus.
Main points:

- Brownian motion is motivated as the scaling limit of one-dimensional simple random walk.
- Brownian motion is a Gaussian process with independent increments and continuous sample paths.
- It is Markov, strong Markov, and a martingale.
- Continuous-time stopping times and optional stopping allow one to solve hitting problems.
- For
$$T = \inf\{t \geq 0 : B_t = -a \text{ or } B_t = b\},$$
we have
$$\mathbb{P}(B_T = b) = \frac{a}{a+b}, \qquad \mathbb{E}[T] = ab.$$
- The reflection principle gives
$$\mathbb{P}(T_a \leq t) = 2\mathbb{P}(B_t \geq a) = 2\Phi\left(-\frac{a}{\sqrt{t}}\right),$$
and more generally
$$\mathbb{P}(T_a \leq t,\ B_t \leq b) = \mathbb{P}(B_t \geq 2a - b) \qquad (b < a).$$
- Consequently,
$$\max_{0 \leq s \leq t} B_s \stackrel{d}{=} |B_t|.$$
- Ordinary Riemann–Stieltjes ideas fail for Brownian motion because the limit can depend on sample-point choices.
- In the example $Y_t = B_t$, midpoint and left-endpoint rules differ by an extra contribution of size $T/2$.
- The Itô integral is defined using left endpoints, first for piecewise-constant adapted processes, then extended by L^2-approximation.
- The resulting integral preserves the martingale property, linearity, and the Itô isometry
$$\mathbb{E}\left[\left(\int_0^T Y_t \, dB_t\right)^2\right] = \int_0^T \mathbb{E}[Y_t^2] \, dt.$$

12. Lecture 9

12.1. Recall from Lecture 8: the Itô integral

Recall that in the previous lecture we defined

$$\int_0^T Y_t \, dB_t$$

for adapted continuous processes $(Y_t)_{t \geq 0}$ by first defining the integral for piecewise-constant adapted processes and then taking an L^2-limit.

The key properties established there were:

- if $(Y_t)_{t \geq 0}$ is adapted and continuous, then

$$\left(\int_0^t Y_s \, dB_s \right)_{t \geq 0}$$

  is a martingale;

- the Itô isometry:

$$\mathbb{E}\left[\left(\int_0^t Y_s \, dB_s \right)^2 \right] = \int_0^t \mathbb{E}[Y_s^2] \, ds;$$

- linearity:

$$\int_0^t \left(a Y_s^{(1)} + b Y_s^{(2)} \right) dB_s = a \int_0^t Y_s^{(1)} \, dB_s + b \int_0^t Y_s^{(2)} \, dB_s.$$

The question for Lecture 9 is: what is the stochastic analogue of the fundamental theorem of calculus and the differential-chain-rule formalism?

12.2. Why the ordinary fundamental theorem of calculus fails

In ordinary calculus, if f is differentiable, then

$$\int_a^b f'(x) \, dx = f(b) - f(a),$$

and in differential form one writes

$$df(x) = f'(x) \, dx.$$

A natural guess would be that for Brownian motion one should have

$$\int_0^T f'(B_t) \, dB_t \stackrel{?}{=} f(B_T) - f(B_0).$$

Lecture 9 begins by explaining that this is false for the Itô integral.

12.3. Counterexample: $f(x) = \frac{1}{2}x^2$

Take

$$f(x) = \frac{1}{2}x^2, \qquad f'(x) = x.$$

If the ordinary chain rule were valid, then we would expect

$$\int_0^T f'(B_t)\,dB_t = \int_0^T B_t\,dB_t = f(B_T) - f(B_0) = \frac{1}{2}B_T^2 - \frac{1}{2}B_0^2 = \frac{1}{2}B_T^2.$$

But this cannot be correct. Indeed, from the previous lecture we know that

$$\left(\int_0^t B_s\,dB_s\right)_{t\geq 0}$$

is a martingale. In particular,

$$\mathbb{E}\left[\int_0^T B_t\,dB_t\right] = 0.$$

On the other hand,

$$\mathbb{E}\left[\frac{1}{2}B_T^2\right] = \frac{1}{2}\mathbb{E}[B_T^2] = \frac{1}{2}T > 0.$$

So the identity

$$\int_0^T B_t\,dB_t = \frac{1}{2}B_T^2$$

cannot hold.

This shows that the stochastic chain rule must contain an extra term.

12.4. Statement of Itô's formula for Brownian motion

Theorem 12.1 (Itô's formula for $f(B_t)$)**.** *Suppose $f \in C^2(\mathbb{R})$. Then for every $T \geq 0$,*

$$f(B_T) - f(B_0) = \int_0^T f'(B_t)\,dB_t + \frac{1}{2}\int_0^T f''(B_t)\,dt.$$

Equivalently, in differential form,

$$df(B_t) = f'(B_t)\,dB_t + \frac{1}{2}f''(B_t)\,dt.$$

So the Itô chain rule differs from the ordinary chain rule by the correction term

$$\frac{1}{2}f''(B_t)\,dt.$$

12.5. Checking the counterexample again

Take

$$f(x) = \frac{1}{2}x^2.$$

Then

$$f'(x) = x, \qquad f''(x) = 1.$$

So Itô's formula gives

$$\frac{1}{2}B_T^2 - \frac{1}{2}B_0^2 = \int_0^T B_t\,dB_t + \frac{1}{2}\int_0^T 1\,dt.$$

Since $B_0 = 0$, this becomes

$$\frac{1}{2}B_T^2 = \int_0^T B_t\,dB_t + \frac{1}{2}T.$$

Therefore

$$\int_0^T B_t\,dB_t = \frac{1}{2}B_T^2 - \frac{1}{2}T.$$

This agrees with the fact already verified in Lecture 8 that

$$(B_t^2 - t)_{t\geq 0}$$

is a martingale.

For $f(x) = \frac{1}{2}x^2$,

$$\int_0^T B_t\,dB_t = \frac{1}{2}B_T^2 - \frac{1}{2}T.$$

So the missing term in the naive chain rule is exactly $-T/2$.

12.6. Systematic martingale construction from Itô's formula

A major consequence of Itô's formula is that for every $f \in C^2(\mathbb{R})$,

$$\left(f(B_t) - f(B_0) - \frac{1}{2}\int_0^t f''(B_s)\,ds\right)_{t\geq 0}$$

is a martingale, because it equals the Itô integral

$$\int_0^t f'(B_s)\,dB_s.$$

For example, if

$$f(x) = e^x,$$

then

$$f'(x) = e^x, \qquad f''(x) = e^x.$$

Therefore

$$d(e^{B_t}) = e^{B_t}\,dB_t + \frac{1}{2}e^{B_t}\,dt,$$

and hence

$$\left(e^{B_t} - \frac{1}{2}\int_0^t e^{B_s}\,ds\right)_{t\geq 0}$$

is a martingale.

12.7. Remark on midpoint sums and the Stratonovich integral

Lecture 9 also recalls the remark from Lecture 8 that if one defines the stochastic integral using midpoint choices

$$\xi_i = \frac{t_i + t_{i+1}}{2}$$

instead of left endpoints, then one gets a different object, the *Stratonovich integral*. For that integral one has the ordinary chain rule:

$$\int_0^T f'(B_t) \circ dB_t = f(B_T) - f(B_0).$$

However, the martingale property that makes the Itô integral so useful is then lost. So:

- Itô integration preserves martingale structure and produces the correction term;
- Stratonovich integration restores the ordinary chain rule but sacrifices that martingale structure.

12.8. Proof idea of Itô's formula for $f(B_t)$

We now explain the proof idea from the notes.

Take a partition

$$0 = t_0 < t_1 < \cdots < t_N = T, \qquad t_{i+1} - t_i = \Delta t = \frac{T}{N}.$$

Then

$$f(B_T) - f(B_0) = \sum_{i=0}^{N-1} \big(f(B_{t_{i+1}}) - f(B_{t_i})\big).$$

Since $f \in C^2$, Taylor expansion gives

$$f(B_{t_{i+1}}) - f(B_{t_i}) = f'(B_{t_i})(B_{t_{i+1}} - B_{t_i}) + \frac{1}{2}f''(B_{t_i})(B_{t_{i+1}} - B_{t_i})^2 + o\big(|B_{t_{i+1}} - B_{t_i}|^2\big)\,.$$

Summing over i, we obtain

$$f(B_T) - f(B_0) = \sum_{i=0}^{N-1} f'(B_{t_i})(B_{t_{i+1}} - B_{t_i}) + \frac{1}{2}\sum_{i=0}^{N-1} f''(B_{t_i})(B_{t_{i+1}} - B_{t_i})^2 + R_N,$$

where the remainder $R_N \to 0$ in the relevant sense as $N \to \infty$.

The first sum is precisely the left-endpoint stochastic integral approximation to

$$\int_0^T f'(B_t)\, dB_t.$$

So the key issue is the second-order term. In ordinary calculus one would discard it because $(\Delta x)^2$ is negligible. For Brownian motion it is not negligible, because Brownian increments are of order $\sqrt{\Delta t}$, so their squares are of order Δt.

12.9. The key step: Brownian quadratic variation

The crucial fact is

$$\sum_{i=0}^{N-1} (B_{t_{i+1}} - B_{t_i})^2 \to T \qquad \text{as } N \to \infty.$$

In the special case

$$f(x) = \frac{1}{2}x^2,$$

this gives

$$\frac{1}{2}\sum_{i=0}^{N-1} (B_{t_{i+1}} - B_{t_i})^2 \to \frac{1}{2}T.$$

This is the Brownian *quadratic variation*. Since the increments are independent with

$$B_{t_{i+1}} - B_{t_i} \sim \mathcal{N}(0, \Delta t),$$

their squares behave like i.i.d. variables with mean Δt. Summing over N intervals yields a total of order

$$N\Delta t = T.$$

Thus the second-order term does not vanish. It converges to

$$\frac{1}{2}\int_0^T f''(B_t)\, dt.$$

Proposition 12.2 (Weighted quadratic variation)**.** *Let $(B_t)_{0\le t\le T}$ be a standard Brownian motion, and let*

$$t_i = \frac{iT}{N}, \qquad \Delta t = \frac{T}{N}, \qquad \Delta_i B := B_{t_{i+1}} - B_{t_i}.$$

Assume $f \in C^2(\mathbb{R})$ and that f'' is bounded. Then

$$\frac{1}{2}\sum_{i=0}^{N-1} f''(B_{t_i})(\Delta_i B)^2 \xrightarrow[N\to\infty]{\mathbb{P}} \frac{1}{2}\int_0^T f''(B_t)\, dt.$$

Proof. Set

$$S_N := \sum_{i=0}^{N-1} f''(B_{t_i})(\Delta_i B)^2.$$

Add and subtract the Riemann sum $\sum_{i=0}^{N-1} f''(B_{t_i})\Delta t$:

$$S_N - \int_0^T f''(B_t)\,dt = A_N + M_N,$$

where

$$A_N := \sum_{i=0}^{N-1} f''(B_{t_i})\Delta t - \int_0^T f''(B_t)\,dt$$

and

$$M_N := \sum_{i=0}^{N-1} f''(B_{t_i})\big((\Delta_i B)^2 - \Delta t\big).$$

Since Brownian paths are continuous, the function

$$t \longmapsto f''(B_t)$$

is almost surely continuous on $[0,T]$. Therefore $A_N \to 0$ almost surely by ordinary Riemann-sum convergence.

It remains to show that $M_N \to 0$ in L^2. Write

$$\eta_i := (\Delta_i B)^2 - \Delta t.$$

Then

$$M_N = \sum_{i=0}^{N-1} f''(B_{t_i})\eta_i.$$

Hence

$$\mathbb{E}[M_N^2] = \sum_{i=0}^{N-1} \mathbb{E}\big[f''(B_{t_i})^2\eta_i^2\big] + 2\sum_{0\le i<j\le N-1} \mathbb{E}\big[f''(B_{t_i})f''(B_{t_j})\eta_i\eta_j\big]\,.$$

We claim that all cross terms vanish. Indeed, if $i<j$, then

$$f''(B_{t_i})f''(B_{t_j})\eta_i$$

is $\mathcal{F}_{t_j}$-measurable, while $\Delta_j B$ is independent of $\mathcal{F}_{t_j}$. Therefore

$$\mathbb{E}[\eta_j \mid \mathcal{F}_{t_j}] = \mathbb{E}[(\Delta_j B)^2 - \Delta t \mid \mathcal{F}_{t_j}] = 0,$$

and so

$$\mathbb{E}\big[f''(B_{t_i})f''(B_{t_j})\eta_i\eta_j\big] = \mathbb{E}\big[f''(B_{t_i})f''(B_{t_j})\eta_i\,\mathbb{E}(\eta_j \mid \mathcal{F}_{t_j})\big] = 0.$$

Thus

$$\mathbb{E}[M_N^2] = \sum_{i=0}^{N-1} \mathbb{E}\big[f''(B_{t_i})^2 \eta_i^2\big] .$$

Since f'' is bounded,

$$\mathbb{E}[M_N^2] \le \|f''\|_\infty^2 \sum_{i=0}^{N-1} \mathbb{E}[\eta_i^2].$$

Now $\Delta_i B \sim N(0, \Delta t)$. Writing $\Delta_i B = \sqrt{\Delta t}\, Z$ with $Z \sim N(0,1)$, we get

$$\mathbb{E}[\eta_i^2] = \mathbb{E}\Big[\big((\Delta_i B)^2 - \Delta t\big)^2\Big] = (\Delta t)^2 \mathbb{E}[(Z^2-1)^2] = 2(\Delta t)^2.$$

Hence

$$\mathbb{E}[M_N^2] \le 2\|f''\|_\infty^2\, N(\Delta t)^2 = 2\|f''\|_\infty^2\, T\,\Delta t \longrightarrow 0.$$

So $M_N \to 0$ in L^2, and therefore in probability.

Combining this with $A_N \to 0$ almost surely, we conclude that

$$S_N \xrightarrow{\mathbb{P}} \int_0^T f''(B_t)\, dt.$$

Multiplying by $1/2$ gives

$$\frac{1}{2}\sum_{i=0}^{N-1} f''(B_{t_i})(\Delta_i B)^2 \xrightarrow{\mathbb{P}} \frac{1}{2}\int_0^T f''(B_t)\, dt.$$

□

Remark 12.3. The boundedness of f'' is used only in the L^2 estimate above. In a full proof of Itô's formula, one usually first proves the result under this boundedness assumption and then extends it to general $f \in C^2$ by a localization argument.

This explains why the stochastic chain rule differs from the ordinary one.

For Brownian motion,

$$\sum_{i=0}^{N-1} (B_{t_{i+1}} - B_{t_i})^2 \to T.$$

This is why the second derivative term survives in Itô's formula.

12.10. Extending from B_t to general Itô processes

The lecture then moves to the more general situation

$$dZ_t = X_t\, dt + Y_t\, dB_t,$$

that is,

$$Z_t = Z_0 + \int_0^t X_s\,ds + \int_0^t Y_s\,dB_s.$$

Here X_t and Y_t are adapted processes, typically continuous. This is the general form of a one-dimensional Itô process in these notes.

The goal is to compute $df(Z_t)$, and more generally $df(t, Z_t)$.

12.11. General Itô formula: time-homogeneous version

Definition 12.4 (Quadratic variation)**.** Let $Z = (Z_t)_{0\le t\le T}$ be a continuous process. Its quadratic variation on $[0,t]$ is defined by

$$\langle Z\rangle_t := \lim_{\|\Pi\|\to 0} \sum_{i=0}^{n-1} \big(Z_{t_{i+1}} - Z_{t_i}\big)^2,$$

provided the limit exists in probability, where

$$\Pi = \{0 = t_0 < t_1 < \cdots < t_n = t\}$$

is a partition of $[0,t]$, and $\|\Pi\| = \max_i (t_{i+1} - t_i)$.

Proposition 12.5 (Quadratic variation of an Itô process)**.** *Let*

$$Z_t = Z_0 + \int_0^t X_s\,ds + \int_0^t Y_s\,dB_s,$$

where X and Y are adapted continuous processes on $[0,T]$, and assume Y is bounded. Then for every $t \in [0,T]$,

$$\langle Z\rangle_t = \int_0^t Y_s^2\,ds.$$

Equivalently, in differential notation,

$$d\langle Z\rangle_t = Y_t^2\,dt.$$

Proof. Write

$$A_t := \int_0^t X_s\,ds, \qquad M_t := \int_0^t Y_s\,dB_s,$$

so that $Z_t = Z_0 + A_t + M_t$.

Fix $t \in [0,T]$, and consider the uniform partition

$$t_i = \frac{it}{N}, \qquad i = 0, 1, \ldots, N.$$

Set

$$\Delta_i A := A_{t_{i+1}} - A_{t_i}, \qquad \Delta_i M := M_{t_{i+1}} - M_{t_i}, \qquad \Delta_i Z := Z_{t_{i+1}} - Z_{t_i}.$$

Then

$$\Delta_i Z = \Delta_i A + \Delta_i M,$$

hence

$$\sum_{i=0}^{N-1}(\Delta_i Z)^2 = \sum_{i=0}^{N-1}(\Delta_i A)^2 + 2\sum_{i=0}^{N-1}\Delta_i A\,\Delta_i M + \sum_{i=0}^{N-1}(\Delta_i M)^2.$$

We analyze these three terms separately.

Step 1: The drift part has zero quadratic variation.

Since $A_t = \int_0^t X_s\,ds$ is continuously differentiable, it has finite variation on $[0,t]$. Therefore

$$\sum_{i=0}^{N-1}(\Delta_i A)^2 \le \Big(\max_{0\le i\le N-1}|\Delta_i A|\Big)\sum_{i=0}^{N-1}|\Delta_i A|.$$

Because A is continuous, $\max_i|\Delta_i A| \to 0$ as $N\to\infty$, and since A has finite variation,

$$\sum_{i=0}^{N-1}|\Delta_i A| \le \int_0^t |X_s|\,ds < \infty.$$

Hence

$$\sum_{i=0}^{N-1}(\Delta_i A)^2 \to 0.$$

Step 2: The cross term vanishes.

By Cauchy–Schwarz,

$$\left|\sum_{i=0}^{N-1}\Delta_i A\,\Delta_i M\right|^2 \le \left(\sum_{i=0}^{N-1}(\Delta_i A)^2\right)\left(\sum_{i=0}^{N-1}(\Delta_i M)^2\right).$$

From Step 1, the first factor tends to 0. The second factor will be shown below to converge in probability to $\int_0^t Y_s^2\,ds$, hence it is bounded in probability. It follows that

$$\sum_{i=0}^{N-1}\Delta_i A\,\Delta_i M \xrightarrow{\mathbb{P}} 0.$$

Step 3: Quadratic variation of the martingale part.

For each i,

$$\Delta_i M = \int_{t_i}^{t_{i+1}} Y_s\,dB_s = Y_{t_i}(B_{t_{i+1}} - B_{t_i}) + R_i,$$

where

$$R_i := \int_{t_i}^{t_{i+1}} (Y_s - Y_{t_i})\,dB_s.$$

Therefore

$$\sum_{i=0}^{N-1}(\Delta_i M)^2 = \sum_{i=0}^{N-1} Y_{t_i}^2(B_{t_{i+1}} - B_{t_i})^2 + 2\sum_{i=0}^{N-1} Y_{t_i}(B_{t_{i+1}} - B_{t_i})R_i + \sum_{i=0}^{N-1} R_i^2.$$

We first handle the remainder term. By Itô isometry,

$$\mathbb{E}[R_i^2] = \mathbb{E}\int_{t_i}^{t_{i+1}} (Y_s - Y_{t_i})^2\, ds.$$

Hence

$$\mathbb{E}\left[\sum_{i=0}^{N-1} R_i^2\right] = \mathbb{E}\int_0^t (Y_s - Y_{\lfloor s \rfloor_N})^2\, ds,$$

where $\lfloor s \rfloor_N$ denotes the left endpoint of the partition interval containing s. Since Y is continuous and bounded, the integrand converges pointwise to 0 and is dominated by a constant. By dominated convergence,

$$\mathbb{E}\left[\sum_{i=0}^{N-1} R_i^2\right] \to 0.$$

Therefore

$$\sum_{i=0}^{N-1} R_i^2 \xrightarrow{L^1} 0, \qquad \text{hence} \qquad \sum_{i=0}^{N-1} R_i^2 \xrightarrow{\mathbb{P}} 0.$$

Next, for the mixed term, by Cauchy–Schwarz,

$$\left|\sum_{i=0}^{N-1} Y_{t_i}(B_{t_{i+1}} - B_{t_i})R_i\right| \le \left(\sum_{i=0}^{N-1} Y_{t_i}^2 (B_{t_{i+1}} - B_{t_i})^2\right)^{1/2} \left(\sum_{i=0}^{N-1} R_i^2\right)^{1/2}.$$

The second factor converges to 0 in probability, while the first one is bounded in probability, so

$$\sum_{i=0}^{N-1} Y_{t_i}(B_{t_{i+1}} - B_{t_i})R_i \xrightarrow{\mathbb{P}} 0.$$

Finally, by the weighted quadratic variation result,

$$\sum_{i=0}^{N-1} Y_{t_i}^2 (B_{t_{i+1}} - B_{t_i})^2 \xrightarrow{\mathbb{P}} \int_0^t Y_s^2\, ds.$$

Combining the last three displays, we obtain

$$\sum_{i=0}^{N-1} (\Delta_i M)^2 \xrightarrow{\mathbb{P}} \int_0^t Y_s^2\, ds.$$

Putting Steps 1–3 together,

$$\sum_{i=0}^{N-1} (\Delta_i Z)^2 \xrightarrow{\mathbb{P}} \int_0^t Y_s^2\, ds.$$

By definition of quadratic variation,

$$\langle Z \rangle_t = \int_0^t Y_s^2\, ds.$$

Therefore, in differential notation,

$$d\langle Z\rangle_t = Y_t^2\,dt.$$

□

Theorem 12.6 (Itô's formula for $f(Z_t)$)**.** *Let*

$$dZ_t = X_t\,dt + Y_t\,dB_t,$$

and suppose $f \in C^2(\mathbb{R})$*. Then*

$$df(Z_t) = f'(Z_t)\,dZ_t + \frac{1}{2}f''(Z_t)\,d\langle Z\rangle_t.$$

Equivalently, since $dZ_t = X_t\,dt + Y_t\,dB_t$*,*

$$df(Z_t) = \left(f'(Z_t)X_t + \frac{1}{2}f''(Z_t)Y_t^2\right)dt + f'(Z_t)Y_t\,dB_t.$$

So the second-order correction is controlled by the quadratic variation process $\langle Z\rangle_t$.

12.12. Proof idea for the general formula

Again take an equispaced partition

$$t_i = \frac{iT}{N}, \qquad i = 0, 1, \ldots, N.$$

Write

$$f(Z_T) - f(Z_0) = \sum_{i=0}^{N-1}\big(f(Z_{t_{i+1}}) - f(Z_{t_i})\big).$$

Taylor expansion gives

$$f(Z_{t_{i+1}}) - f(Z_{t_i}) = f'(Z_{t_i})(Z_{t_{i+1}} - Z_{t_i}) + \frac{1}{2}f''(Z_{t_i})(Z_{t_{i+1}} - Z_{t_i})^2 + o\big(|Z_{t_{i+1}} - Z_{t_i}|^2\big).$$

So there are two main terms:

$$\text{Term 1} = \sum_{i=0}^{N-1} f'(Z_{t_i})(Z_{t_{i+1}} - Z_{t_i}),$$

and

$$\text{Term 2} = \frac{1}{2}\sum_{i=0}^{N-1} f''(Z_{t_i})(Z_{t_{i+1}} - Z_{t_i})^2.$$

For Term 1, use

$$Z_{t_{i+1}} - Z_{t_i} = \int_{t_i}^{t_{i+1}} X_t\,dt + \int_{t_i}^{t_{i+1}} Y_t\,dB_t.$$

Then

$$\sum_{i=0}^{N-1} f'(Z_{t_i}) \int_{t_i}^{t_{i+1}} X_t \, dt \to \int_0^T f'(Z_t) X_t \, dt,$$

just like an ordinary Riemann sum.

For the stochastic part, define the piecewise-constant approximation

$$g_t^{(N)} = f'(Z_{t_i}) \qquad \text{for } t \in [t_i, t_{i+1}).$$

Then

$$\sum_{i=0}^{N-1} f'(Z_{t_i}) \int_{t_i}^{t_{i+1}} Y_t \, dB_t = \int_0^T g_t^{(N)} Y_t \, dB_t,$$

and as $N \to \infty$,

$$\int_0^T g_t^{(N)} Y_t \, dB_t \to \int_0^T f'(Z_t) Y_t \, dB_t$$

by the same L^2-approximation argument used in the definition of the Itô integral.

Thus Term 1 converges to

$$\int_0^T f'(Z_t) X_t \, dt + \int_0^T f'(Z_t) Y_t \, dB_t.$$

For Term 2, one needs the quadratic variation of Z, which the lecture defines next.

12.13. Quadratic variation

Definition 12.7 (Quadratic variation)**.** Given a process $(Z_t)_{t \geq 0}$, define its quadratic variation process by

$$\langle Z \rangle_t = \lim_{N \to \infty} \sum_{i=0}^{N-1} (Z_{t_{i+1}} - Z_{t_i})^2, \qquad t_i = \frac{it}{N},$$

whenever the limit exists.

This should be compared with total variation

$$\lim_{N \to \infty} \sum_{i=0}^{N-1} |Z_{t_{i+1}} - Z_{t_i}|,$$

which is a different object.

The notes emphasize:

- $\langle Z \rangle_t \geq \langle Z \rangle_s \geq 0$ whenever $0 \leq s < t$, so quadratic variation is nondecreasing;
- if Z_t has continuous sample paths, then $\langle Z \rangle_t$ is also continuous.

Once quadratic variation is available, Term 2 becomes

$$\frac{1}{2} \int_0^T f''(Z_t) \, d\langle Z \rangle_t.$$

12.14. Quadratic variation of an Itô process

Proposition 12.8. *If*

$$dZ_t = X_t\,dt + Y_t\,dB_t,$$

then

$$d\langle Z\rangle_t = Y_t^2\,dt, \qquad i.e. \qquad \langle Z\rangle_t = \int_0^t Y_s^2\,ds.$$

Idea from the notes. Over a small interval $[t_i, t_{i+1}]$,

$$Z_{t_{i+1}} - Z_{t_i} = \int_{t_i}^{t_{i+1}} X_t\,dt + \int_{t_i}^{t_{i+1}} Y_t\,dB_t.$$

The first term is of order Δt, while the second is of order $\sqrt{\Delta t}$. Therefore

$$(Z_{t_{i+1}} - Z_{t_i})^2 = \left(\int_{t_i}^{t_{i+1}} Y_t\,dB_t\right)^2 + O((\Delta t)^2) + O((\Delta t)^{3/2}).$$

Summing over i, the error terms vanish as $N \to \infty$. Thus

$$\sum_{i=0}^{N-1}(Z_{t_{i+1}} - Z_{t_i})^2 \sim \sum_{i=0}^{N-1}\left(\int_{t_i}^{t_{i+1}} Y_t\,dB_t\right)^2.$$

Conditioning on $\mathcal{F}_{t_i}$ and using the Itô isometry,

$$\mathbb{E}\left[\left(\int_{t_i}^{t_{i+1}} Y_t\,dB_t\right)^2 \,\middle|\, \mathcal{F}_{t_i}\right] = \int_{t_i}^{t_{i+1}} \mathbb{E}[Y_t^2 \mid \mathcal{F}_{t_i}]\,dt.$$

A martingale-difference argument then shows that

$$\sum_{i=0}^{N-1}\left(\int_{t_i}^{t_{i+1}} Y_t\,dB_t\right)^2 \to \int_0^T Y_t^2\,dt.$$

Hence

$$\langle Z\rangle_T = \int_0^T Y_t^2\,dt.$$

□

If

$$dZ_t = X_t\,dt + Y_t\,dB_t,$$

then

$$d\langle Z\rangle_t = Y_t^2\,dt.$$

So the quadratic variation comes entirely from the Brownian part.

12.15. Conclusion: general Itô formula

Putting the previous pieces together gives

$$df(Z_t) = f'(Z_t)\,dZ_t + \frac{1}{2}f''(Z_t)\,d\langle Z\rangle_t.$$

Since

$$dZ_t = X_t\,dt + Y_t\,dB_t \qquad \text{and} \qquad d\langle Z\rangle_t = Y_t^2\,dt,$$

we obtain

$$df(Z_t) = \left(f'(Z_t)X_t + \frac{1}{2}f''(Z_t)Y_t^2\right)dt + f'(Z_t)Y_t\,dB_t.$$

This is the one-dimensional Itô formula for a general Itô process.

12.16. Time-inhomogeneous Itô formula

The notes then extend the formula to functions $f(t,z)$ depending explicitly on time.

Theorem 12.9 (Time-inhomogeneous Itô formula)**.** *Let*

$$dZ_t = X_t\,dt + Y_t\,dB_t,$$

and suppose $f \in C^{1,2}$, meaning once continuously differentiable in t and twice continuously differentiable in z. Then

$$df(t,Z_t) = \frac{\partial f}{\partial t}(t,Z_t)\,dt + \frac{\partial f}{\partial z}(t,Z_t)\,dZ_t + \frac{1}{2}\frac{\partial^2 f}{\partial z^2}(t,Z_t)\,d\langle Z\rangle_t.$$

Equivalently,

$$df(t,Z_t) = \left(\frac{\partial f}{\partial t}(t,Z_t) + X_t\frac{\partial f}{\partial z}(t,Z_t) + \frac{1}{2}Y_t^2\frac{\partial^2 f}{\partial z^2}(t,Z_t)\right)dt + Y_t\frac{\partial f}{\partial z}(t,Z_t)\,dB_t.$$

12.17. Proof idea for the time-inhomogeneous version

Write

$$f(T,Z_T) - f(0,Z_0) = \sum_{i=0}^{N-1}\big(f(t_{i+1},Z_{t_{i+1}}) - f(t_i,Z_{t_i})\big).$$

Then split each increment into two parts:

$$f(t_{i+1},Z_{t_{i+1}}) - f(t_i,Z_{t_i}) = \big(f(t_{i+1},Z_{t_{i+1}}) - f(t_i,Z_{t_{i+1}})\big) + \big(f(t_i,Z_{t_{i+1}}) - f(t_i,Z_{t_i})\big).$$

The first part is the pure time change, giving

$$\frac{\partial f}{\partial t}(t_i,Z_{t_{i+1}})\Delta t$$

in the limit.

The second part is treated exactly as before using Taylor expansion in the space variable:

$$\frac{\partial f}{\partial z}(t_i, Z_{t_i})(Z_{t_{i+1}} - Z_{t_i}) + \frac{1}{2}\frac{\partial^2 f}{\partial z^2}(t_i, Z_{t_i})(Z_{t_{i+1}} - Z_{t_i})^2.$$

Combining the limits yields the formula.

12.18. Example: the exponential martingale

Take

$$f(t, z) = \exp(at + bz),$$

and choose $Z_t = B_t$. Then

$$\frac{\partial f}{\partial t}(t, z) = ae^{at+bz}, \qquad \frac{\partial f}{\partial z}(t, z) = be^{at+bz}, \qquad \frac{\partial^2 f}{\partial z^2}(t, z) = b^2 e^{at+bz}.$$

Since for $Z_t = B_t$ we have

$$dZ_t = dB_t \qquad \text{and} \qquad d\langle Z\rangle_t = dt,$$

Itô's formula gives

$$d\,f(t, B_t) = ae^{at+bB_t}\,dt + be^{at+bB_t}\,dB_t + \frac{1}{2}b^2 e^{at+bB_t}\,dt.$$

Therefore

$$d\,f(t, B_t) = \left(a + \frac{b^2}{2}\right) f(t, B_t)\,dt + b\,f(t, B_t)\,dB_t.$$

Now choose

$$a + \frac{b^2}{2} = 0, \qquad \text{i.e.} \qquad a = -\frac{b^2}{2}.$$

Then the drift term disappears, and we obtain

$$d\left(e^{bB_t - \frac{1}{2}b^2 t}\right) = b\,e^{bB_t - \frac{1}{2}b^2 t}\,dB_t.$$

Hence

$$\left(e^{bB_t - \frac{1}{2}b^2 t}\right)_{t\geq 0}$$

is a martingale.

For every $b \in \mathbb{R}$,

$$\left(e^{bB_t - \frac{1}{2}b^2 t}\right)_{t\geq 0}$$

is a martingale.

This is the *exponential martingale*, one of the most important examples in stochastic calculus.

12.19. Product rule in stochastic calculus

In ordinary calculus,

$$d(fg) = f\,dg + g\,df.$$

In stochastic calculus there is an extra correction term.

Suppose

$$dZ_t^{(i)} = X_t^{(i)}\,dt + Y_t^{(i)}\,dB_t, \qquad i = 1, 2.$$

First, from Itô's formula applied to $f(z) = z^2$, we get

$$d\big((Z_t)^2\big) = 2Z_t\,dZ_t + d\langle Z\rangle_t.$$

Indeed,

$$d\big((Z_t)^2\big) = 2Z_t(X_t\,dt + Y_t\,dB_t) + Y_t^2\,dt.$$

To derive the product rule for two different processes, use the polarization identity

$$Z_t^{(1)}Z_t^{(2)} = \left(\frac{Z_t^{(1)} + Z_t^{(2)}}{2}\right)^2 - \left(\frac{Z_t^{(1)} - Z_t^{(2)}}{2}\right)^2.$$

Applying the square rule to both terms yields

$$d\big(Z_t^{(1)}Z_t^{(2)}\big) = Z_t^{(1)}\,dZ_t^{(2)} + Z_t^{(2)}\,dZ_t^{(1)} + d\langle Z^{(1)}, Z^{(2)}\rangle_t,$$

where $\langle Z^{(1)}, Z^{(2)}\rangle_t$ is the *cross variation*.

12.20. Cross variation

Definition 12.10 (Cross variation)**.** Given two processes $Z^{(1)}$ and $Z^{(2)}$, define

$$\langle Z^{(1)}, Z^{(2)}\rangle_t = \lim_{N\to\infty} \sum_{i=0}^{N-1} \big(Z_{t_{i+1}}^{(1)} - Z_{t_i}^{(1)}\big)\big(Z_{t_{i+1}}^{(2)} - Z_{t_i}^{(2)}\big),$$

when the limit exists.

For Itô processes driven by the same Brownian motion,

$$dZ_t^{(i)} = X_t^{(i)}\,dt + Y_t^{(i)}\,dB_t,$$

the cross variation satisfies

$$d\langle Z^{(1)}, Z^{(2)}\rangle_t = Y_t^{(1)}Y_t^{(2)}\,dt.$$

So the stochastic product rule becomes

$$d\big(Z_t^{(1)}Z_t^{(2)}\big) = Z_t^{(1)}\,dZ_t^{(2)} + Z_t^{(2)}\,dZ_t^{(1)} + Y_t^{(1)}Y_t^{(2)}\,dt.$$

If

$$dZ_t^{(i)} = X_t^{(i)}\,dt + Y_t^{(i)}\,dB_t, \qquad i = 1, 2,$$

then

$$d\big(Z_t^{(1)} Z_t^{(2)}\big) = Z_t^{(1)}\,dZ_t^{(2)} + Z_t^{(2)}\,dZ_t^{(1)} + d\langle Z^{(1)}, Z^{(2)}\rangle_t,$$

with

$$d\langle Z^{(1)}, Z^{(2)}\rangle_t = Y_t^{(1)} Y_t^{(2)}\,dt.$$

12.21. How Lecture 9 fits into the stochastic-calculus picture

The main message of Lecture 9 is that the correct differential calculus for Brownian-driven processes is governed by quadratic variation:

- ordinary calculus ignores $(\Delta x)^2$ terms;
- for Brownian motion, $(\Delta B)^2$ is of order Δt, so these terms survive;
- the surviving second-order terms are encoded by $d\langle Z\rangle_t$;
- this produces Itô's formula, the stochastic chain rule.

12.22. Summary

Lecture 9 develops the stochastic chain rule.
Main ideas:

- The naive identity
$$\int_0^T f'(B_t)\,dB_t = f(B_T) - f(B_0)$$
is false for the Itô integral.

- For $f(x) = \frac{1}{2}x^2$,
$$\int_0^T B_t\,dB_t = \frac{1}{2}B_T^2 - \frac{1}{2}T.$$

- The correct formula for $f(B_t)$ is
$$df(B_t) = f'(B_t)\,dB_t + \frac{1}{2}f''(B_t)\,dt.$$

- The extra term comes from Brownian quadratic variation:
$$\sum (B_{t_{i+1}} - B_{t_i})^2 \to T.$$

- For a general Itô process
$$dZ_t = X_t\,dt + Y_t\,dB_t,$$
one has
$$d\langle Z\rangle_t = Y_t^2\,dt,$$
and
$$df(Z_t) = f'(Z_t)\,dZ_t + \frac{1}{2}f''(Z_t)\,d\langle Z\rangle_t.$$

- The time-dependent version is
$$df(t, Z_t) = \frac{\partial f}{\partial t}(t, Z_t)\,dt + \frac{\partial f}{\partial z}(t, Z_t)\,dZ_t + \frac{1}{2}\frac{\partial^2 f}{\partial z^2}(t, Z_t)\,d\langle Z\rangle_t.$$

- A key example is the exponential martingale
$$\left(e^{bB_t - \frac{1}{2}b^2 t}\right)_{t\geq 0}.$$

- The stochastic product rule includes a cross-variation correction:
$$d(Z_t^{(1)} Z_t^{(2)}) = Z_t^{(1)}\,dZ_t^{(2)} + Z_t^{(2)}\,dZ_t^{(1)} + d\langle Z^{(1)}, Z^{(2)}\rangle_t.$$

13. Lecture 10

13.1. Administrative note

The lecture begins with a short final-exam announcement:

- final exam date: April 22;
- similar format and requirements as before;
- 6 pages of cheat sheet allowed (double-sided);
- the exam covers the material uniformly;
- office hours to be announced.

13.2. Recall: one-dimensional Itô formula

From Lecture 9, if

$$dZ_t = X_t\,dt + Y_t\,dB_t,$$

and if $f \in C^{1,2}$, then

$$df(t, Z_t) = \frac{\partial f}{\partial t}(t, Z_t)\,dt + \frac{\partial f}{\partial z}(t, Z_t)\,dZ_t + \frac{1}{2}\frac{\partial^2 f}{\partial z^2}(t, Z_t)\,Y_t^2\,dt.$$

Equivalently,

$$df(t, Z_t) = \left(\frac{\partial f}{\partial t}(t, Z_t) + X_t\frac{\partial f}{\partial z}(t, Z_t) + \frac{1}{2}Y_t^2\frac{\partial^2 f}{\partial z^2}(t, Z_t)\right)dt + Y_t\frac{\partial f}{\partial z}(t, Z_t)\,dB_t.$$

A useful corollary is the stochastic product rule. If

$$dZ_t^{(i)} = X_t^{(i)}\,dt + Y_t^{(i)}\,dB_t, \qquad i = 1, 2,$$

then

$$d\big(Z_t^{(1)}Z_t^{(2)}\big) = Z_t^{(1)}\,dZ_t^{(2)} + Z_t^{(2)}\,dZ_t^{(1)} + d\langle Z^{(1)}, Z^{(2)}\rangle_t,$$

with

$$d\langle Z^{(1)}, Z^{(2)}\rangle_t = Y_t^{(1)}Y_t^{(2)}\,dt.$$

So in differential notation,

$$d\big(Z_t^{(1)}Z_t^{(2)}\big) = Z_t^{(1)}\,dZ_t^{(2)} + Z_t^{(2)}\,dZ_t^{(1)} + Y_t^{(1)}Y_t^{(2)}\,dt.$$

For Itô processes driven by the same Brownian motion,

$$d\big(Z_t^{(1)} Z_t^{(2)}\big) = Z_t^{(1)}\, dZ_t^{(2)} + Z_t^{(2)}\, dZ_t^{(1)} + Y_t^{(1)} Y_t^{(2)}\, dt.$$

This is the stochastic correction to the ordinary product rule.

13.3. Example 1: the Ornstein–Uhlenbeck process

Consider the stochastic differential equation

$$dZ_t = -Z_t\, dt + dB_t.$$

Here the process is defined implicitly by an SDE, and the goal is to solve it explicitly.

The key idea is to use an integrating factor, exactly as in ordinary differential equations. Consider

$$e^t Z_t.$$

Using the stochastic product rule,

$$d(e^t Z_t) = e^t\, dZ_t + e^t Z_t\, dt + 0,$$

since e^t has finite variation and therefore has no quadratic covariation term with Z_t. Substituting $dZ_t = -Z_t\, dt + dB_t$ gives

$$d(e^t Z_t) = e^t(-Z_t\, dt + dB_t) + e^t Z_t\, dt = e^t\, dB_t.$$

Integrating from 0 to t,

$$e^t Z_t - Z_0 = \int_0^t e^s\, dB_s.$$

Hence

$$Z_t = e^{-t}\left(Z_0 + \int_0^t e^s\, dB_s\right).$$

Since the Itô integral of a deterministic function against Brownian motion is Gaussian,

$$\int_0^t e^s\, dB_s \sim \mathcal{N}\left(0, \int_0^t e^{2s}\, ds\right),$$

it follows that, marginally,

$$Z_t \sim \mathcal{N}\left(e^{-t} Z_0,\ e^{-2t} \int_0^t e^{2s}\, ds\right).$$

The variance can be simplified:

$$e^{-2t} \int_0^t e^{2s}\, ds = \frac{1 - e^{-2t}}{2}.$$

Therefore

$$Z_t \sim \mathcal{N}\left(e^{-t} Z_0, \frac{1-e^{-2t}}{2}\right).$$

So as $t \to \infty$,

$$e^{-t} Z_0 \to 0, \qquad \frac{1-e^{-2t}}{2} \to \frac{1}{2},$$

and thus

$$Z_t \Longrightarrow \mathcal{N}\left(0, \frac{1}{2}\right).$$

This is the stationary law of the process.

The Ornstein–Uhlenbeck process

$$dZ_t = -Z_t\,dt + dB_t$$

has explicit solution

$$Z_t = e^{-t}\left(Z_0 + \int_0^t e^s\,dB_s\right),$$

and converges in distribution to

$$\mathcal{N}\left(0, \frac{1}{2}\right).$$

It is a basic example of a continuous-time Markov process with mean reversion.

13.4. Example 2: geometric Brownian motion

Now consider

$$dZ_t = rZ_t\,dt + bZ_t\,dB_t, \qquad Z_0 = 1.$$

A natural guess is that the solution should have exponential form. Suppose

$$Z_t = \exp(at + kB_t).$$

Applying Itô's formula to $f(t,x) = e^{at+kx}$ with $x = B_t$ gives

$$dZ_t = aZ_t\,dt + kZ_t\,dB_t + \frac{1}{2}k^2 Z_t\,dt.$$

So

$$dZ_t = \left(a + \frac{1}{2}k^2\right) Z_t\,dt + kZ_t\,dB_t.$$

To match the target SDE, we need

$$k = b, \qquad a + \frac{1}{2}b^2 = r.$$

Therefore

$$a = r - \frac{b^2}{2}.$$

So the solution is

$$Z_t = \exp\left(\left(r - \frac{b^2}{2}\right) t + bB_t\right).$$

This process is called *geometric Brownian motion*. It is one of the most important models in stochastic calculus and mathematical finance.

A useful special case is $r = 0$. Then

$$Z_t = \exp\left(-\frac{b^2}{2}t + bB_t\right),$$

which is exactly the exponential martingale from Lecture 9. In particular, when $r = 0$, $(Z_t)_{t\geq 0}$ is a martingale.

The SDE

$$dZ_t = rZ_t\,dt + bZ_t\,dB_t$$

has solution

$$Z_t = \exp\left(\left(r - \frac{b^2}{2}\right) t + bB_t\right).$$

When $r = 0$, geometric Brownian motion is a martingale.

13.5. Multivariate Brownian motion

The lecture next turns to the multidimensional setting. Let

$$B_t = (B_t^{(1)}, B_t^{(2)}, \ldots, B_t^{(d)}) \in \mathbb{R}^d,$$

where the coordinates $B_t^{(1)}, \ldots, B_t^{(d)}$ are independent one-dimensional Brownian motions.

If $f = f(t, x)$ with $x \in \mathbb{R}^d$, then the multidimensional Itô formula for $f(t, B_t)$ is

$$df(t, B_t) = \frac{\partial f}{\partial t}(t, B_t)\,dt + \nabla_x f(t, B_t)^T\,dB_t + \frac{1}{2}\,\Delta_x f(t, B_t)\,dt,$$

where

$$\Delta_x f(t, x) = \sum_{j=1}^{d} \frac{\partial^2 f}{\partial x_j^2}(t, x)$$

is the Laplacian.

Here

$$\nabla_x f(t, B_t)^T\,dB_t = \sum_{j=1}^{d} \frac{\partial f}{\partial x_j}(t, B_t)\,dB_t^{(j)}.$$

13.6. General multidimensional Itô formula

More generally, let $Z_t \in \mathbb{R}^d$ satisfy

$$dZ_t = X_t\,dt + Y_t\,dB_t,$$

where

$$X_t \in \mathbb{R}^d, \qquad Y_t \in \mathbb{R}^{d\times d},$$

and $B_t \in \mathbb{R}^d$ is standard Brownian motion. If $f \in C^{1,2}$, then

$$df(t,Z_t) = \frac{\partial f}{\partial t}(t,Z_t)\,dt + \nabla f(t,Z_t)^T\,dZ_t + \frac{1}{2}\operatorname{Tr}\big(Y_t^T\nabla_x^2 f(t,Z_t)Y_t\big)\,dt.$$

Equivalently, substituting $dZ_t = X_t\,dt + Y_t\,dB_t$,

$$df(t,Z_t) = \left(\frac{\partial f}{\partial t}(t,Z_t) + \nabla f(t,Z_t)^T X_t + \frac{1}{2}\operatorname{Tr}\big(Y_t^T\nabla_x^2 f(t,Z_t)Y_t\big)\right)dt + \nabla f(t,Z_t)^T Y_t\,dB_t.$$

So the one-dimensional second-derivative term $\frac{1}{2}f''Y_t^2$ becomes a Hessian term with a trace.

For $Z_t \in \mathbb{R}^d$ solving

$$dZ_t = X_t\,dt + Y_t\,dB_t,$$

the multidimensional Itô formula is

$$df(t,Z_t) = \frac{\partial f}{\partial t}(t,Z_t)\,dt + \nabla f(t,Z_t)^T\,dZ_t + \frac{1}{2}\operatorname{Tr}\big(Y_t^T\nabla_x^2 f(t,Z_t)Y_t\big)\,dt.$$

13.7. Continuous-time, discrete-space processes

After stochastic calculus in continuous state space, the lecture moves to another major class of continuous-time processes: processes with discrete state space.

The first example is the Poisson process.

13.8. Review: Poisson random variables

A random variable N has Poisson distribution with parameter $\lambda > 0$ if

$$\mathbb{P}(N = n) = e^{-\lambda}\frac{\lambda^n}{n!}, \qquad n = 0, 1, 2, \ldots.$$

We write

$$N \sim \mathrm{Poi}(\lambda).$$

13.9. The Poisson process

A Poisson process may be described in terms of waiting times between successive events. Let

$$T_1, T_2, \dots$$

be i.i.d. exponential random variables with rate λ:

$$T_i \sim \mathrm{Exp}(\lambda), \qquad p_{T_i}(t) = \begin{cases} \lambda e^{-\lambda t}, & t \geq 0, \\ 0, & t < 0. \end{cases}$$

Then define

$$N(t) = \#\{\text{events that have occurred by time } t\}.$$

So $N(t)$ counts the number of marked points in $[0, t]$.

The exponential law appears naturally because it is the only continuous distribution with the memoryless property:

$$\mathbb{P}(T_i > t + s \mid T_i > t) = \mathbb{P}(T_i > s).$$

This matches the Markov property of the Poisson process.

13.10. Basic facts about the Poisson process

If $(N(t))_{t\geq 0} \sim \mathrm{PP}(\lambda)$, then:

- for each fixed $t \geq 0$,
$$N(t) \sim \mathrm{Poi}(\lambda t);$$
- $(N(t))_{t\geq 0}$ is a Markov process;
- it has independent increments;
- more precisely, for $s, t \geq 0$,
$$N(t+s) - N(t) \sim \mathrm{Poi}(\lambda s),$$
and this increment is independent of the past up to time t.

A very useful martingale is

$$(N(t) - \lambda t)_{t\geq 0}.$$

Indeed, using independent increments,

$$\mathbb{E}[N(t) - \lambda t \mid \mathcal{F}_s] = N(s) + \mathbb{E}[N(t) - N(s)] - \lambda t = N(s) + \lambda(t - s) - \lambda t = N(s) - \lambda s.$$

So $(N(t) - \lambda t)$ is a martingale.

For a Poisson process of rate λ,

$$N(t) \sim \mathrm{Poi}(\lambda t), \qquad N(t+s) - N(t) \sim \mathrm{Poi}(\lambda s),$$

and

$$(N(t) - \lambda t)_{t \geq 0}$$

is a martingale.

13.11. Axiomatic characterization of the Poisson process

The lecture also gives a more local, infinitesimal definition. A Poisson process $(N(t))_{t\geq 0}$ is a process taking values in the nonnegative integers such that:

- $N(t)$ is nondecreasing in t;
- for small $h > 0$,
$$\mathbb{P}\big(N(t+h) - N(t) = 1\big) = \lambda h + o(h);$$
- for small $h > 0$,
$$\mathbb{P}\big(N(t+h) - N(t) \geq 2\big) = o(h).$$

So over a very small time interval, with probability about λh exactly one jump occurs, and the probability of two or more jumps is negligible compared with h.

This point of view leads to general jump processes with state-dependent intensity. For example, one may replace the constant rate λ by a local intensity of the form

$$\lambda(t, N_t),$$

so that

$$\mathbb{P}\big(N(t+h) - N(t) = 1 \mid \mathcal{F}_t\big) = \lambda(t, N_t)h + o(h),$$

and

$$\mathbb{P}\big(N(t+h) - N(t) \geq 2 \mid \mathcal{F}_t\big) = o(h).$$

This is the jump-process analogue of specifying an SDE in the diffusion setting.

13.12. Poisson point processes

The Poisson process extends naturally from time intervals to general subsets of space. Let S be a space equipped with an intensity function $\lambda(x) \geq 0$. For a measurable set $A \subseteq S$, define

$$N(A) = \#\{\text{marked points in } A\}.$$

A Poisson point process satisfies:

- $$N(A) \sim \mathrm{Poi}\left(\int_A \lambda(x)\,dx\right);$$
- if A and B are disjoint, then $N(A)$ and $N(B)$ are independent.

A convenient construction is:

1. sample
$$N \sim \mathrm{Poi}\left(\int_S \lambda(x)\,dx\right);$$
2. conditional on N, sample N i.i.d. points in S with density
$$p(x) = \frac{\lambda(x)}{\int_S \lambda(y)\,dy}.$$

The ordinary Poisson process is the special case $S = [0, \infty)$ with constant intensity $\lambda(x) \equiv \lambda$. On a finite interval $[0, T]$, the construction becomes especially simple:

1. sample
$$N(T) \sim \mathrm{Poi}(\lambda T);$$
2. conditional on $N(T) = n$, sample n i.i.d. event locations uniformly on $[0, T]$;
3. then define $N(t)$ as the number of sampled points falling in $[0, t]$.

Explanation of the construction. In this construction, the interval $[0, T]$ and the rate λ are fixed in advance; they are not random. The randomness begins only when we generate the process itself.

First, we sample
$$N(T) \sim \mathrm{Poi}(\lambda T).$$

This means that we first determine the *total number of points* in the whole interval $[0, T]$. Thus $N(T)$ is a random variable taking values in $\{0, 1, 2, \dots\}$, with mean
$$\mathbb{E}[N(T)] = \lambda T.$$

So this first step decides *how many* events occur in total on $[0, T]$.

Next, conditional on $N(T) = n$, we know that there are exactly n event times in the interval. We then need to determine *where* these n points are located. Since the intensity is constant on $[0, T]$, all locations are equally likely, so the n event times are sampled independently and uniformly on $[0, T]$.

In the general Poisson point process construction on a space S with intensity function $\lambda(x)$, the point locations have density
$$p(x) = \frac{\lambda(x)}{\int_S \lambda(y)\,dy}.$$

This density $p(x)$ is the probability density of the location of *one sampled point*, conditional on the total number of points. It is *not* the distribution of the counting variable $N(t)$.

In the present case $S = [0, T]$ and $\lambda(x) \equiv \lambda$ is constant, so

$$p(x) = \frac{\lambda}{\int_0^T \lambda \, dy} = \frac{\lambda}{\lambda T} = \frac{1}{T}, \qquad 0 \le x \le T.$$

Thus, conditional on $N(T) = n$, the n event times are i.i.d. uniform random variables on $[0, T]$.

Finally, for each $t \in [0, T]$, we define $N(t)$ to be the number of sampled points that fall in the subinterval $[0, t]$. Since each sampled point falls in $[0, t]$ with probability

$$\mathbb{P}(X_i \in [0, t]) = \frac{t}{T},$$

it follows that

$$N(t) \mid N(T) = n \sim \text{Binomial}\left(n, \frac{t}{T}\right).$$

So there are two different objects here:

- $p(x)$ describes the density of the *location of a single point*;
- $N(t) \mid N(T) = n$ describes the *number of sampled points* that fall in $[0, t]$, and this has a binomial distribution.

Thus the construction has two stages:

1. sample the total number of events on $[0, T]$;
2. given that number, sample their locations independently in time.

13.13. Superposition and thinning

This construction immediately gives two extremely useful properties.

Superposition. If $(N_1(t))_{t \ge 0}$ and $(N_2(t))_{t \ge 0}$ are independent Poisson processes with rates λ_1 and λ_2, then

$$(N_1(t) + N_2(t))_{t \ge 0}$$

is a Poisson process with rate $\lambda_1 + \lambda_2$.

Thinning. Suppose $(N(t))_{t \ge 0} \sim \text{PP}(\lambda)$, and independently label each event as type i with probability p_i, where $\sum_i p_i = 1$. Let

$$N_i(t) = \#\{\text{type } i \text{ events in } [0, t]\}.$$

Then the processes $(N_i(t))_{t \ge 0}$ are independent Poisson processes with rates λp_i.

If a Poisson process of rate λ is thinned independently with type probabilities (p_i), then the type-counting processes are independent Poisson processes with rates (λp_i).

13.14. Continuous-time Markov chains

The lecture then introduces general continuous-time Markov chains (CTMCs). Let S be a finite or countable state space, and let ν be the initial distribution on S. A process $(X_t)_{t\geq 0}$ is a continuous-time Markov chain if, for every

$$0 < t_1 < t_2 < \cdots < t_n,$$

and states $i_0, i_1, \ldots, i_n \in S$,

$$\mathbb{P}(X_0 = i_0, X_{t_1} = i_1, \ldots, X_{t_n} = i_n) = \nu_{i_0}\, p_{i_0 i_1}^{(t_1)}\, p_{i_1 i_2}^{(t_2 - t_1)} \cdots p_{i_{n-1} i_n}^{(t_n - t_{n-1})},$$

where

$$p_{ij}^{(t)} = \mathbb{P}(X_t = j \mid X_0 = i)$$

is the transition matrix at time t.

So, just as in discrete time, the future depends on the present state and not on the full past; the only difference is that the parameter is now continuous time $t \geq 0$.

13.15. Example: the Poisson process as a CTMC

The Poisson process is a CTMC on the state space $\mathbb{N}_0$. Starting from state i, after time t the process can only be in states $j \geq i$, and

$$p_{ij}^{(t)} = \begin{cases} 0, & j < i, \\ e^{-\lambda t}\dfrac{(\lambda t)^{j-i}}{(j-i)!}, & j \geq i. \end{cases}$$

This is just the statement that the number of jumps in a time interval of length t is Poisson with mean λt.

Explanation. The Poisson process $(N_t)_{t\geq 0}$ is a continuous-time Markov chain on the state space

$$\mathbb{N}_0 = \{0, 1, 2, \ldots\},$$

because N_t records the total number of events that have occurred by time t. Since this is a counting process, the state can never decrease: starting from state i, the process can only move to states $j \geq i$. Hence

$$p_{ij}^{(t)} = 0, \qquad j < i.$$

Now suppose the process starts from state i. Then after time t, the state of the process is

$$N_t = i + \big(N_t - N_0\big).$$

Thus, in order for the process to be in state j at time t, there must be exactly $j - i$ new jumps during the time interval of length t. Since the increments of a Poisson process are stationary and independent,

$$N_t - N_0 \sim \mathrm{Poi}(\lambda t).$$

Therefore,

$$p_{ij}^{(t)} = \mathbb{P}(N_t = j \mid N_0 = i) = \mathbb{P}(N_t - N_0 = j - i).$$

If $j \geq i$, this gives

$$p_{ij}^{(t)} = e^{-\lambda t}\frac{(\lambda t)^{j-i}}{(j-i)!}.$$

So the transition probabilities are

$$p_{ij}^{(t)} = \begin{cases} 0, & j < i, \\ e^{-\lambda t}\dfrac{(\lambda t)^{j-i}}{(j-i)!}, & j \geq i. \end{cases}$$

In other words, the transition matrix of the Poisson process is obtained directly from the fact that the number of jumps in a time interval of length t has a Poisson distribution with mean λt. This shows that the Poisson process is one of the simplest examples of a continuous-time Markov chain.

13.16. The generator of a CTMC

The generator records the infinitesimal behavior of the chain. For $i, j \in S$, define

$$g_{ij} = \lim_{t \to 0^+} \frac{p_{ij}^{(t)} - \delta_{ij}}{t} = \frac{d}{dt} p_{ij}^{(t)}\bigg|_{t=0},$$

where

$$\delta_{ij} = \mathbf{1}_{\{i=j\}}.$$

If the limit exists, the matrix

$$G = (g_{ij})_{i,j \in S}$$

is called the *generator* of the chain.

Under mild conditions, the generator exists and has the following basic properties:

- $$g_{ii} \leq 0;$$
- for $i \neq j$,
$$g_{ij} \geq 0;$$

- the row sums are zero:

$$\sum_{j \in S} g_{ij} = 0.$$

The last identity follows from the fact that

$$\sum_{j \in S} p_{ij}^{(t)} = 1$$

for every t, so differentiating at $t = 0$ gives zero.

13.17. From generator to transition semigroup

The continuous-time analogue of repeated matrix multiplication is matrix exponentiation. If G is the generator, then the transition matrix at time t is

$$P^{(t)} = (p_{ij}^{(t)})_{i,j \in S} = e^{tG}.$$

Recall the matrix exponential:

$$e^{tG} = I + tG + \frac{t^2 G^2}{2!} + \frac{t^3 G^3}{3!} + \cdots .$$

The proof idea is the following. By the Markov property,

$$P^{(t)} = \left(P^{(t/n)}\right)^n.$$

For small t/n,

$$P^{(t/n)} = I + \frac{t}{n} G + o\left(\frac{1}{n}\right).$$

Therefore

$$P^{(t)} = \left(I + \frac{t}{n} G + o\left(\frac{1}{n}\right)\right)^n \longrightarrow e^{tG}.$$

So the generator plays the same role in continuous time that the one-step transition matrix plays in discrete time.

For a CTMC with generator G,

$$P^{(t)} = e^{tG}.$$

Thus the whole continuous-time evolution is determined by the infinitesimal generator.

Explanation. The generator G describes the infinitesimal behavior of the chain, while $P(t)$ describes its evolution over a finite time interval of length t. More precisely,

$$P(t) = (p_{ij}^{(t)})_{i,j \in S}, \qquad p_{ij}^{(t)} = \mathbb{P}(X_t = j \mid X_0 = i),$$

and for small $h > 0$, the transition matrix has the approximation

$$P(h) = I + hG + o(h).$$

This means that over a very short time interval, the chain is very likely to remain in its current state, and the first-order probabilities of jumping to other states are determined by the generator G.

Now fix $t > 0$, and divide the interval $[0, t]$ into n equal pieces of length t/n. By the Markov property and time-homogeneity,

$$P(t) = \big(P(t/n)\big)^n.$$

Using the small-time approximation,

$$P(t/n) = I + \frac{t}{n}G + o\left(\frac{1}{n}\right),$$

so

$$P(t) = \left(I + \frac{t}{n}G + o\left(\frac{1}{n}\right)\right)^n.$$

This is the matrix analogue of the classical limit

$$\left(1 + \frac{x}{n}\right)^n \to e^x.$$

Hence, as $n \to \infty$,

$$P(t) \to e^{tG},$$

where

$$e^{tG} = I + tG + \frac{t^2G^2}{2!} + \frac{t^3G^3}{3!} + \cdots$$

is the matrix exponential.

Therefore,

$$P(t) = e^{tG}.$$

So the generator G plays in continuous time the same role that the one-step transition matrix plays in discrete time: it completely determines the evolution of the Markov chain.

13.18. Generator of the Poisson process

For the Poisson process of rate λ on $\mathbb{N}_0$, the generator is

$$G = \begin{pmatrix} -\lambda & \lambda & 0 & 0 & \cdots \\ 0 & -\lambda & \lambda & 0 & \cdots \\ 0 & 0 & -\lambda & \lambda & \cdots \\ \vdots & \vdots & \vdots & \vdots & \ddots \end{pmatrix}.$$

So from each state i, the chain waits an exponential time of rate λ and then jumps deterministically to $i + 1$.

Explanation. For a continuous-time Markov chain, the generator matrix $G = (g_{ij})$ records the instantaneous jump rates of the process. In the case of the Poisson process on the state space

$$\mathbb{N}_0 = \{0, 1, 2, \dots\},$$

the only possible transition from state i is to state $i+1$, and this occurs at rate λ. Thus, for $j \neq i$,

$$g_{ij} = \begin{cases} \lambda, & j = i+1, \\ 0, & \text{otherwise.} \end{cases}$$

The diagonal entries of a generator are determined by the requirement that each row sum to zero. Therefore,

$$g_{ii} = -\sum_{j \neq i} g_{ij} = -\lambda.$$

Hence the generator matrix is

$$G = \begin{pmatrix} -\lambda & \lambda & 0 & 0 & \cdots \\ 0 & -\lambda & \lambda & 0 & \cdots \\ 0 & 0 & -\lambda & \lambda & \cdots \\ \vdots & \vdots & \vdots & \vdots & \ddots \end{pmatrix}.$$

Why this generator has this form. Recall that for a continuous-time Markov chain, the generator is defined by

$$g_{ij} = \lim_{h \downarrow 0} \frac{p_{ij}(h) - \mathbf{1}_{\{i=j\}}}{h}.$$

In particular, for $j \neq i$,

$$g_{ij} = \lim_{h \downarrow 0} \frac{p_{ij}(h)}{h}.$$

For the Poisson process, starting from state i, the state after time h is

$$N_h = i + (\text{number of jumps in an interval of length } h).$$

Since the increment over an interval of length h has distribution $\mathrm{Poi}(\lambda h)$, we compute as follows.

If $j = i+1$, then exactly one jump must occur, so

$$p_{i,i+1}(h) = \mathbb{P}(\text{exactly one jump in } [0,h]) = e^{-\lambda h}(\lambda h).$$

Therefore

$$g_{i,i+1} = \lim_{h \downarrow 0} \frac{e^{-\lambda h}\lambda h}{h} = \lambda.$$

If $j > i+1$, then at least two jumps must occur in time h. Thus

$$p_{ij}(h) = e^{-\lambda h}\frac{(\lambda h)^{j-i}}{(j-i)!}, \qquad j - i \geq 2.$$

Since this is of order h^2, we get

$$g_{ij} = \lim_{h \downarrow 0} \frac{p_{ij}(h)}{h} = 0.$$

If $j < i$, then the transition is impossible because the Poisson process is nondecreasing. Hence

$$p_{ij}(h) = 0, \qquad \text{so} \qquad g_{ij} = 0.$$

Therefore, for $j \neq i$,

$$g_{ij} = \begin{cases} \lambda, & j = i+1, \\ 0, & \text{otherwise.} \end{cases}$$

Finally, the diagonal entries are chosen so that each row sums to zero:

$$g_{ii} = -\sum_{j \neq i} g_{ij} = -\lambda.$$

This matrix reflects the small-time behavior of the Poisson process. Indeed, for small $h > 0$,

$$p_{ii}(h) \approx 1 - \lambda h, \qquad p_{i,i+1}(h) \approx \lambda h, \qquad p_{ij}(h) \approx 0 \quad \text{for } j \neq i, i+1.$$

So, over a very short time interval, the process either stays in the same state or jumps upward by exactly one.

Equivalently, when the process is in state i, it waits for an exponential holding time with parameter λ, and then jumps deterministically to state $i+1$. This is exactly the behavior of the Poisson process: the waiting times between successive jumps are i.i.d. exponential random variables with rate λ, and each jump increases the count by 1.

13.19. Constructive description of a CTMC

The lecture ends with a very concrete description of how to build a CTMC from its generator. Suppose $G = (g_{xy})_{x,y \in S}$ is given. Define

$$q_x := -g_{xx} = \sum_{y \neq x} g_{xy}.$$

Then, conditional on the current state being x:

- the holding time in state x is exponential with rate q_x:

$$\tau \sim \mathrm{Exp}(q_x);$$

- after that holding time, the chain jumps to a new state $y \neq x$ with probability

$$\mathbb{P}(x \to y) = \frac{g_{xy}}{q_x}.$$

Why the jump probability is g_{xy}/q_x. Suppose the chain is currently in state x. For a small time interval of length h, the generator definition gives

$$\mathbb{P}(X_{t+h} = y \mid X_t = x) = g_{xy}h + o(h), \qquad y \neq x.$$

Thus the probability of a jump specifically from x to y in a short interval is approximately $g_{xy}h$.

If we sum over all possible destinations $z \neq x$, then the probability that *some* jump occurs from x during $[t, t+h]$ is

$$\sum_{z \neq x} \big(g_{xz}h + o(h)\big) = q_x h + o(h),$$

where

$$q_x = \sum_{z \neq x} g_{xz}.$$

Therefore, conditioning on the event that a jump occurs, we obtain

$$\mathbb{P}(\text{jump goes to } y \mid \text{a jump occurs from } x) = \frac{g_{xy}h + o(h)}{q_x h + o(h)}.$$

Letting $h \downarrow 0$, this converges to

$$\mathbb{P}(x \to y) = \frac{g_{xy}}{q_x}.$$

So g_{xy}/q_x is simply the proportion of the total leaving rate from x that corresponds to jumps from x to y.

If $q_x = 0$, then the state x is absorbing.

So the chain may be viewed as follows:

1. start at $\bar{X}_0$ sampled from the initial law ν;
2. if the current state is $\bar{X}_k = x$, wait for a time
$$\tau_{k+1} \sim \mathrm{Exp}(q_x);$$
3. then jump to a new state $\bar{X}_{k+1} = y \neq x$ with probability g_{xy}/q_x;
4. repeat independently at each new state.

If the successive jump states are

$$\bar{X}_0, \bar{X}_1, \bar{X}_2, \ldots,$$

and the successive holding times are

$$\tau_1, \tau_2, \tau_3, \ldots,$$

then the continuous-time chain is obtained by keeping the state constant between jumps:

$$X_t = \bar{X}_k \qquad \text{for } t \in \left[\sum_{i=1}^{k} \tau_i, \sum_{i=1}^{k+1} \tau_i\right).$$

This gives a clean decomposition of a CTMC into:

- an *embedded discrete-time Markov chain* $(\bar{X}_k)$ that records the jump destinations;
- random exponential holding times that determine how long the process stays in each state.

13.20. Relation with discrete-time Markov chains

Because of this decomposition, many discrete-time ideas transfer directly to continuous time:

- recurrence and transience;
- convergence to stationarity;
- long-run averages.

The one extra feature in continuous time is that states are not visited for one time step each. Instead, the chain spends an exponential amount of time in each state, and the mean holding time depends on the current state through $q_x = -g_{xx}$. So when studying time averages, one must weight states according to how long the process typically remains there.

13.21. Final review list from the lecture

The last pages of the notes give a short course review. The main topics listed are:

- discrete-time Markov chains:
  - recurrence/transience,
  - first-step expansion and hitting-time computations,
  - convergence to stationarity and positive recurrence;
- discrete-time martingales:
  - optional stopping theorem,
  - martingale convergence,
  - conditions for these theorems, especially uniform integrability;
- continuous-time processes:
  - Brownian motion and the reflection principle,
  - stochastic calculus,
  - Poisson processes and continuous-time Markov chains,
  - equivalent characterizations of these processes.

13.22. Summary

Lecture 10 has two big themes.
First, it continues stochastic calculus:

- solve concrete SDEs such as the Ornstein–Uhlenbeck process and geometric Brownian motion;
- extend Itô's formula to the multidimensional setting;
- use the stochastic product rule in computations.

Second, it introduces continuous-time jump processes:

- Poisson processes and their basic properties;
- Poisson point processes, superposition, and thinning;
- continuous-time Markov chains on finite or countable state spaces;
- generators, matrix exponentials, and the constructive jump-and-hold description of CTMCs.

Key formulas to remember:

- Ornstein–Uhlenbeck:
$$Z_t = e^{-t}\left(Z_0 + \int_0^t e^s\, dB_s\right);$$
- geometric Brownian motion:
$$Z_t = \exp\left(\left(r - \frac{b^2}{2}\right)t + bB_t\right);$$
- multidimensional Itô formula:
$$df(t, Z_t) = \frac{\partial f}{\partial t}(t, Z_t)\, dt + \nabla f(t, Z_t)^T\, dZ_t + \frac{1}{2}\operatorname{Tr}\big(Y_t^T \nabla_x^2 f(t, Z_t) Y_t\big)\, dt;$$
- Poisson martingale:
$$(N(t) - \lambda t)_{t\geq 0};$$
- CTMC semigroup:
$$P^{(t)} = e^{tG}.$$

14. Final Exam 2024

STA447/2006: Final Exam

Instructor: Wenlong Mou
Date: April 22, 2024
Total marks: 100 points
Time allowed: 180 minutes

Question 1 [20 points]

Mark each of the following statements with T (true) or F (false).

(1) Let P be an irreducible and transient Markov chain. For any state pair $i, j \in S$, we have

$$\sum_{n \geq 0} p_{ij}^{(n)} < \infty.$$

Answer: T.

Explanation. In an irreducible chain, transience is a class property. So if the chain is transient, then every state is transient. For a transient state j, the expected total number of visits to j starting from any i is finite, and that expectation is exactly

$$\mathbb{E}_i[N(j)] = \sum_{n \geq 0} p_{ij}^{(n)}.$$

(2) Let P be a reducible and aperiodic Markov chain on a finite state space S. Let i be a transient state. Then there exists a stationary distribution π of P such that

$$\lim_{n \to \infty} p_{ij}^{(n)} = \pi_j, \qquad \text{for each } j \in S.$$

Answer: T.

Explanation. In a finite state space, probability mass eventually leaves transient states and ends up inside recurrent classes. A reducible finite chain can have several closed recurrent classes, and one can choose a stationary distribution supported on the classes that are reached from i with the correct absorption probabilities. Then the limit distribution of the chain started from i agrees with that stationary distribution.

(3) Let i, j be a pair of states in a discrete-time Markov chain. If $f_{ij} = 1$, then the chain starting from i will visit j infinitely often. **Answer:** F.

Explanation. The condition $f_{ij} = 1$ only says that j is hit at least once almost surely. It does *not* imply infinitely many visits. A standard counterexample is biased random walk on $\mathbb{Z}$ with positive drift: starting from 0 it hits 1 almost surely, but the walk is transient, so each fixed state is visited only finitely many times almost surely.

(4) Let $(X_k)_{k\geq 0}$ be a real-valued stochastic process. Define

$$T := \inf\left\{t \geq 5 : X_t = \max_{0\leq k\leq t} X_k\right\}.$$

Then T is a stopping time. **Answer:** T.

Explanation. To decide whether $T \leq n$, one only needs the sample values $X_0, \ldots, X_n$. Indeed,

$$\{T \leq n\} = \bigcup_{t=5}^{n} \left\{X_t = \max_{0\leq k\leq t} X_k\right\},$$

and each event on the right is measurable with respect to the information available by time n.

(5) Let $(X_k)_{k\geq 0}$ be a martingale that converges to X_∞. Suppose that

$$\mathbb{E}[X_k^2] < \infty, \qquad \text{for every } k \geq 0.$$

Then

$$\mathbb{E}[X_\infty] = \mathbb{E}[X_0].$$

Answer: F.

Explanation. Having finite second moment at each fixed time is not enough. What is needed is a stronger condition such as uniform integrability or a uniform L^2 bound:

$$\sup_k \mathbb{E}[X_k^2] < \infty.$$

Without such a uniform bound, the limit may fail to preserve expectation.

(6) Let $(B(t))_{t\geq 0}$ be standard Brownian motion. Define $t_{n,i} := i/n$ for $i = 0, 1, \ldots, n$. Then

$$\int_0^1 B(s)\,ds = \lim_{n\to\infty} \sum_{i=0}^{n-1} B\left(\frac{t_{n,i} + t_{n,i+1}}{2}\right)(t_{n,i+1} - t_{n,i}).$$

Answer: T.

Explanation. This is an ordinary Riemann integral in time, not an Itô integral. Since Brownian sample paths are continuous, midpoint Riemann sums converge to the usual integral $\int_0^1 B(s)\,ds$.

(7) Let $(B(t))_{t\geq 0}$ be standard Brownian motion, and define

$$S := \{t \in [0, 1] : B(t) = 1\}.$$

Then

$$\mathbb{P}(|S| = 1) > 0.$$

Answer: F.

Explanation. Brownian motion is continuous and highly oscillatory. If it hits level 1 inside $[0,1]$, the hitting set is almost surely not a singleton. So the event "hit level 1 exactly once" has probability 0.

(8) Let $(N(t))_{t\geq 0}$ be a Poisson process with intensity $\lambda > 0$. Define

$$X = N(3) - N(2), \qquad Y = N(1) + N(4) - N(3).$$

Then X and Y are independent. **Answer:** T.

Explanation. We can rewrite

$$Y = N(1) + (N(4) - N(3)).$$

The random variable X depends only on the increment over $(2,3]$, while Y depends only on the disjoint intervals $[0,1]$ and $(3,4]$. By independent increments of the Poisson process, X is independent of Y.

Question 2 [14 points]

Consider the Markov chain on $S = \{1,2,3,4,5\}$ with transition matrix

$$P = \begin{pmatrix} 1/2 & 1/2 & 0 & 0 & 0 \\ 1/4 & 0 & 1/4 & 1/2 & 0 \\ 0 & 0 & 1 & 0 & 0 \\ 0 & 0 & 0 & 2/3 & 1/3 \\ 0 & 0 & 0 & 1/2 & 1/2 \end{pmatrix}.$$

(1) Compute f_{14}. Answer:

$$f_{14} = \frac{2}{3}.$$

Explanation. Use first-step expansion. Starting from 1, the chain either stays at 1 or moves to 2:

$$f_{14} = p_{11}f_{14} + p_{12}f_{24} = \frac{1}{2}f_{14} + \frac{1}{2}f_{24}.$$

Starting from 2, the chain hits 4 immediately with probability 1/2, and if it goes to 1 then the problem restarts:

$$f_{24} = p_{24} + p_{21}f_{14} = \frac{1}{2} + \frac{1}{4}f_{14}.$$

Substitute into the first equation:

$$f_{14} = \frac{1}{2}f_{14} + \frac{1}{2}\left(\frac{1}{2} + \frac{1}{4}f_{14}\right).$$

Hence

$$\frac{3}{8}f_{14} = \frac{1}{4}, \qquad f_{14} = \frac{2}{3}.$$

(2) Find the set of all stationary distributions. Answer:

$$\left\{\left(0,0,1-\lambda,\tfrac{3}{5}\lambda,\tfrac{2}{5}\lambda\right) : \lambda \in [0,1]\right\}.$$

Explanation. States 1 and 2 are transient, so every stationary distribution must assign them mass 0. There are then two closed recurrent classes:

- $\{3\}$, where 3 is absorbing, with stationary distribution $(0,0,1,0,0)$;
- $\{4,5\}$, where the restricted transition matrix is

$$\begin{pmatrix} 2/3 & 1/3 \\ 1/2 & 1/2 \end{pmatrix}.$$

Let the stationary distribution on $\{4,5\}$ be (α,β). Solving

$$(\alpha,\beta)\begin{pmatrix} 2/3 & 1/3 \\ 1/2 & 1/2 \end{pmatrix} = (\alpha,\beta), \qquad \alpha+\beta=1,$$

gives

$$\alpha = \frac{3}{5}, \qquad \beta = \frac{2}{5}.$$

Therefore every stationary distribution is a convex combination of the two extremal stationary distributions.

Question 3 [12 points]

Consider the Markov chain on $S = \{0,1,2,\dots\}$ with transitions

$$p_{i,i+1} = \frac{i}{2i+2}, \qquad p_{i,i-1} = \frac{i+2}{2i+2} \quad (i \geq 1),$$

and

$$p_{0,0} = \frac{1}{2}, \qquad p_{0,1} = \frac{1}{2}.$$

Find the stationary distribution π, and show that

$$\lim_{n\to\infty} p_{ij}^{(n)} = \pi_j \qquad \text{for all } i,j.$$

Answer:

$$\pi_0 = \frac{2}{5}, \qquad \pi_i = \frac{4}{5i(i+2)}, \quad i \geq 1.$$

Explanation. This is a birth–death chain, so detailed balance is the natural tool. For $i \geq 1$,

$$\pi_i \cdot \frac{i}{2i+2} = \pi_{i+1} \cdot \frac{i+3}{2i+4}.$$

After simplifying,

$$i(i+2)\pi_i = (i+1)(i+3)\pi_{i+1}.$$

Hence

$$\pi_i = \frac{3\pi_1}{i(i+2)}, \qquad i \geq 1.$$

At state 0, detailed balance gives

$$\pi_0 \cdot \frac{1}{2} = \pi_1 \cdot \frac{3}{4}, \qquad \text{so} \qquad \pi_0 = \frac{3}{2}\pi_1.$$

Now normalize:

$$1 = \pi_0 + \sum_{i=1}^{\infty} \pi_i = \frac{3}{2}\pi_1 + 3\pi_1 \sum_{i=1}^{\infty} \frac{1}{i(i+2)}.$$

Use

$$\frac{1}{i(i+2)} = \frac{1}{2}\left(\frac{1}{i} - \frac{1}{i+2}\right),$$

so

$$\sum_{i=1}^{\infty} \frac{1}{i(i+2)} = \frac{3}{4}.$$

Therefore

$$1 = \frac{3}{2}\pi_1 + 3\pi_1 \cdot \frac{3}{4} = \frac{15}{4}\pi_1, \qquad \pi_1 = \frac{4}{15}.$$

This yields

$$\pi_0 = \frac{2}{5}, \qquad \pi_i = \frac{4}{5i(i+2)} \quad (i \geq 1).$$

Finally, the chain is irreducible, aperiodic because $p_{00} > 0$, and positive recurrent because a stationary distribution exists. Therefore the Markov chain convergence theorem gives

$$\lim_{n\to\infty} p_{ij}^{(n)} = \pi_j.$$

Question 4 [27 points]

Let $(B_t)_{t\geq 0}$ be standard Brownian motion.

(1) If $dX_t = -f(X_t)\,dt + dB_t$, find h such that

$$M_t := X_t^2 - \int_0^t h(X_s)\,ds$$

is a martingale, and express M_t as an Itô integral.

Answer:

$$h(x) = 1 - 2xf(x), \qquad M_t = \int_0^t 2X_s\,dB_s.$$

Explanation. Apply Itô's formula to $x \mapsto x^2$:

$$d(X_t^2) = 2X_t\,dX_t + d\langle X\rangle_t.$$

Since

$$dX_t = -f(X_t)\,dt + dB_t, \qquad d\langle X\rangle_t = dt,$$

we get

$$d(X_t^2) = \big(-2X_t f(X_t) + 1\big)dt + 2X_t\,dB_t.$$

Therefore choosing

$$h(x) = 1 - 2xf(x)$$

removes the drift, so

$$M_t = X_t^2 - \int_0^t (1 - 2X_s f(X_s))\,ds = \int_0^t 2X_s\,dB_s.$$

(2) Compute

$$\mathbb{E}\left[\max_{0\le t\le 1} B_t \mid B_1 = 0\right].$$

Answer:

$$\mathbb{E}\left[\max_{0\le t\le 1} B_t \mid B_1 = 0\right] = \frac{1}{2}\sqrt{\frac{\pi}{2}}.$$

Explanation. Let

$$M := \max_{0\le t\le 1} B_t.$$

By the reflection principle, for $x > 0$ and $y < x$,

$$\mathbb{P}(M > x, B_1 < y) = \mathbb{P}(B_1 > 2x - y).$$

Passing to conditional probabilities gives

$$\mathbb{P}(M > x \mid B_1 = 0) = e^{-2x^2}.$$

Then use the tail formula for a nonnegative random variable:

$$\mathbb{E}[M \mid B_1 = 0] = \int_0^\infty \mathbb{P}(M > x \mid B_1 = 0)\,dx = \int_0^\infty e^{-2x^2}\,dx = \frac{1}{2}\sqrt{\frac{\pi}{2}}.$$

(3) Let $X_t = B_t - t$. Show that $M_t = e^{2X_t}$ is a martingale. Answer: $M_t = e^{2X_t}$ is a martingale.

Explanation. Write

$$dX_t = dB_t - dt.$$

Apply Itô's formula to $f(x) = e^{2x}$, so $f'(x) = 2e^{2x}$ and $f''(x) = 4e^{2x}$:

$$dM_t = 2e^{2X_t}\, dX_t + \frac{1}{2} \cdot 4e^{2X_t}\, dt.$$

Substitute $dX_t = dB_t - dt$:

$$dM_t = 2e^{2X_t}(dB_t - dt) + 2e^{2X_t} dt = 2e^{2X_t}\, dB_t.$$

The drift vanishes, so M_t is an Itô integral plus its initial value, hence a martingale.

(4) Define

$$\tau := \inf\{t \geq 0 : |X_t| \geq 1\}.$$

Use part (3) to compute $\mathbb{P}(X_\tau = 1)$.

Answer:

$$\mathbb{P}(X_\tau = 1) = \frac{1}{e^2 + 1}.$$

Explanation. Since $|X_{t\wedge\tau}| \leq 1$, the stopped martingale $e^{2X_{t\wedge\tau}}$ is bounded, so optional stopping applies:

$$1 = \mathbb{E}[M_0] = \mathbb{E}[M_\tau] = \mathbb{E}[e^{2X_\tau}].$$

Now $X_\tau \in \{-1, 1\}$, so if

$$p := \mathbb{P}(X_\tau = 1),$$

then

$$1 = e^2 p + e^{-2}(1 - p).$$

Solving gives

$$p = \frac{1}{e^2 + 1}.$$

Question 5 [10 points]

If $(N_1(t))_{t\geq 0}$ and $(N_2(t))_{t\geq 0}$ are independent Poisson processes with intensities λ_1 and λ_2, compute

$$\mathbb{P}(\text{the last arrival in } [0, t] \text{ is from } N_2 \,|\, N_1(t) + N_2(t) = n)\,.$$

Answer:

$$\frac{\lambda_2}{\lambda_1 + \lambda_2}.$$

Explanation. Superpose the two Poisson processes:

$$N(t) := N_1(t) + N_2(t).$$

Then N is a Poisson process of rate $\lambda_1 + \lambda_2$. Each arrival of the superposed process comes from

process 2 with probability

$$\frac{\lambda_2}{\lambda_1 + \lambda_2},$$

and from process 1 with probability

$$\frac{\lambda_1}{\lambda_1 + \lambda_2}.$$

This label is independent of the arrival time structure. Therefore, even after conditioning on the total number of arrivals being n, the last arrival is from N_2 with probability

$$\frac{\lambda_2}{\lambda_1 + \lambda_2}.$$

Question 6 [17 points]

Let $(X_k)_{k\geq 0}$ be an irreducible Markov chain on $S = \{0, 1, 2, \dots\}$ with $|X_{k+1} - X_k| \leq 1$ almost surely. Suppose $V : S \to \mathbb{R}_+$ is nonnegative, strictly increasing, and $V(x) \to \infty$ as $x \to \infty$.

(1) Assume there exists $K < \infty$ such that

$$\sum_j p_{ij} V(j) = V(i), \qquad i > K,$$

and

$$\sum_j p_{ij} V(j) < \infty, \qquad i = 0, 1, \dots, K.$$

Show the chain is recurrent.

Answer: The chain is recurrent.

Explanation. Start from $X_0 = K + 1$ and define the hitting time

$$\tau := \inf\{t > 0 : X_t \leq K\}.$$

Consider

$$M_n := V(X_{n\wedge\tau}).$$

For states above K, the drift condition says $PV = V$, so before hitting $\{0, 1, \dots, K\}$ the process has zero drift. Hence (M_n) is a nonnegative martingale. By the martingale convergence theorem, M_n converges almost surely.

If $\tau = \infty$, then the chain never enters $\{0, 1, \dots, K\}$. Because the chain moves only one step at a time, it must either keep fluctuating forever above K or drift to infinity. Since V is strictly increasing and unbounded, in either case $V(X_n)$ cannot converge. This contradicts convergence of M_n. Therefore $\tau < \infty$ almost surely.

So starting from $K + 1$, the chain returns to the lower set almost surely. By irreducibility, every state is hit almost surely from every other state, hence the chain is recurrent.

(2) Assume there exist $K < \infty$ and $\varepsilon > 0$ such that

$$\sum_j p_{ij} V(j) \le V(i) - \varepsilon, \qquad i > K,$$

and again $\sum_j p_{ij} V(j) < \infty$ for $i \le K$. Show the chain has a stationary distribution.

Answer: The chain has a stationary distribution.

Explanation. Again let

$$\tau := \inf\{t > 0 : X_t \le K\}$$

for a chain started from $K + 1$. Define

$$M_n := V(X_{n\wedge\tau}) + \varepsilon(n \wedge \tau).$$

The drift condition implies that (M_n) is a supermartingale. Therefore

$$\mathbb{E}[M_n] \le \mathbb{E}[M_0] = V(K + 1).$$

Since $V \ge 0$, this gives

$$\varepsilon\, \mathbb{E}[n \wedge \tau] \le V(K + 1),$$

so by letting $n \to \infty$,

$$\mathbb{E}[\tau] \le \frac{V(K + 1)}{\varepsilon} < \infty.$$

Hence the return time to the set $\{0, 1, \ldots, K\}$ has finite expectation. Using the one-step-at-a-time assumption, one gets finite expected return time to $K + 1$, so the chain is positive recurrent. An irreducible positive recurrent chain has a stationary distribution.

15. Final Exam 2025

STA447/2006: Final Exam

Instructor: Wenlong Mou
Date: April 24, 2025
Total marks: 100 points
Time allowed: 180 minutes

Question 1 [20 points]

Mark each of the following statements with T (true) or F (false).

(1) Let P be an irreducible and transient discrete-time Markov chain. For any state pair $i, j \in S$, we have $f_{ij} < 1$. **Answer:** F.

Explanation. In an irreducible transient chain, it can still happen that one state hits another almost surely. The standard counterexample is biased random walk on $\mathbb{Z}$ with drift to the right: starting from 0, the walk hits 1 almost surely, but the chain is still transient.

(2) Let i, j, k, ℓ be states in a discrete-time discrete-space Markov chain. If $i \to j$ and $k \to \ell$, and if

$$\sum_{n \geq 0} p_{i\ell}^{(n)} < \infty,$$

then

$$\sum_{n \geq 0} p_{jk}^{(n)} < \infty.$$

Answer: T.

Explanation. The assumption $\sum_n p_{i\ell}^{(n)} < \infty$ implies that state ℓ is transient. Since $k \to \ell$, the state k must also be transient. Once k is transient, the expected number of visits to k starting from any state j is finite, so

$$\sum_{n \geq 0} p_{jk}^{(n)} < \infty.$$

(3) Let P be an irreducible Markov chain. If P is positive recurrent, then for any i, j,

$$\mathbb{E}_i[T_j] < \infty.$$

Answer: T.

Explanation. In an irreducible positive recurrent chain, all states communicate and return times have finite expectations. Hitting times between states are also finite in expectation.

(4) Let $(X_k)_{k \geq 0}$ be symmetric simple random walk, and define

$$T := \sup\{t \in [0, 100] : X_t = 0\}.$$

Then T is a stopping time. **Answer:** F.

Explanation. To know whether $T \leq n$, one must know whether the walk ever returns to 0 after time n. That requires future information, so T is not a stopping time.

(5) Let $(X_k)_{k\geq 0}$ be a martingale such that $X_k \geq -20$ almost surely for every k. Then there exists X_∞ such that

$$X_n \to X_\infty \qquad \text{a.s.}$$

Answer: T.

Explanation. The shifted process $Y_k := X_k + 20$ is a nonnegative martingale. Every nonnegative martingale converges almost surely, so $Y_k \to Y_\infty$ a.s. and therefore $X_k \to X_\infty := Y_\infty - 20$ a.s.

(6) Let $(B(t))_{t\geq 0}$ be standard Brownian motion. Then

$$\int_0^t dB(s) = B(t).$$

Answer: T.

Explanation. This is the Itô integral with constant integrand 1. By definition,

$$\int_0^t 1\, dB(s) = B(t) - B(0) = B(t),$$

since $B(0) = 0$.

(7) For $i = 1, 2, 3$, let $(B^{(i)}(t))_{t\geq 0}$ be independent standard Brownian motions. Define

$$T := \inf\{t \geq 0 : B^{(i)}(t) \in [10, 11] \text{ for } i = 1, 2, 3\}.$$

Then $\mathbb{P}(T < \infty) = 1$. **Answer:** F.

Explanation. The three-dimensional process

$$(B^{(1)}(t), B^{(2)}(t), B^{(3)}(t))$$

is standard Brownian motion in $\mathbb{R}^3$. The event in the statement says this 3-dimensional Brownian motion hits the box $[10, 11]^3$. Brownian motion in dimension 3 is transient, so the probability of hitting a fixed bounded set is strictly less than 1.

(8) Let $(N(t))_{t\geq 0}$ be a Poisson process with intensity 1. Let

$$X(t) = N(t)^2 - (t + t^2).$$

Then $(X(t))_{t\geq 0}$ is a martingale. **Answer:** F.

Explanation. The term $t + t^2$ only centers the one-time marginal because

$$\mathbb{E}[N(t)^2] = t + t^2.$$

But being mean zero at each time is not enough for the martingale property. The correct quadratic martingale for Poisson process includes the linear compensator coming from the jump structure, not just $t + t^2$.

Question 2 [14 points]

Consider the Markov chain on $S = \{1, 2, 3, 4, 5\}$ with transition matrix

$$P = \begin{pmatrix} 0 & 1/2 & 1/2 & 0 & 0 \\ 0 & 0 & 1/2 & 1/2 & 0 \\ 0 & 0 & 0 & 1/2 & 1/2 \\ 1/2 & 0 & 0 & 0 & 1/2 \\ 1/2 & 1/2 & 0 & 0 & 0 \end{pmatrix}.$$

For $i \in S$, define the hitting time

$$T_i := \inf\{t \geq 1 : X_t = i\}.$$

(1) Compute $\mathbb{E}[T_1 \mid X_0 = 1]$. Answer:

$$\mathbb{E}_1[T_1] = 5.$$

Explanation. By symmetry, the stationary distribution is uniform:

$$\pi_i = \frac{1}{5}, \qquad i = 1, 2, 3, 4, 5.$$

The chain is irreducible, so the recurrence time theorem applies:

$$\mathbb{E}_1[T_1] = \frac{1}{\pi_1} = 5.$$

(2) Compute $\mathbb{P}(T_5 < T_2 \mid X_0 = 1)$. Answer:

$$\mathbb{P}(T_5 < T_2 \mid X_0 = 1) = \frac{3}{7}.$$

Explanation. Let

$$q_i := \mathbb{P}_i(T_5 < T_2).$$

Then $q_2 = 0$ and $q_5 = 1$. Starting from 1, the first step goes to 2 or 3 with probability 1/2 each, so

$$q_1 = \frac{1}{2} \cdot 0 + \frac{1}{2} q_3.$$

From 3,

$$q_3 = \frac{1}{2} q_4 + \frac{1}{2} \cdot 1.$$

From 4,

$$q_4 = \frac{1}{2}q_1 + \frac{1}{2} \cdot 1.$$

Substitute the last two equations into the first:

$$q_1 = \frac{1}{2}\left(\frac{1}{2}q_4 + \frac{1}{2}\right) = \frac{1}{4}q_4 + \frac{1}{4} = \frac{1}{4}\left(\frac{1}{2}q_1 + \frac{1}{2}\right) + \frac{1}{4}.$$

Hence

$$q_1 = \frac{1}{8}q_1 + \frac{3}{8}, \qquad \frac{7}{8}q_1 = \frac{3}{8}, \qquad q_1 = \frac{3}{7}.$$

Question 3 [13 points]

Consider the Markov chain on $S = \{0, 1, 2, \dots\}$ with transitions

$$p_{i,i+1} = q, \qquad p_{i,i-1} = 1 - q \quad (i \geq 1),$$

and

$$p_{0,0} = \frac{1}{2}, \qquad p_{0,1} = \frac{1}{2},$$

where $q \in (0, 1)$.

(1) Find a stationary measure. Answer: One stationary measure is given by

$$\mu_0 = 2(1 - q), \qquad \mu_i = \left(\frac{q}{1-q}\right)^{i-1}, \quad i \geq 1.$$

Explanation. For a birth–death chain, use detailed balance:

$$\mu_i q = \mu_{i+1}(1 - q), \qquad i \geq 1.$$

So

$$\mu_{i+1} = \mu_i \frac{q}{1-q}, \qquad \mu_i = \mu_1 \left(\frac{q}{1-q}\right)^{i-1}.$$

At 0,

$$\mu_0 \cdot \frac{1}{2} = \mu_1(1 - q),$$

so if we choose $\mu_1 = 1$, then

$$\mu_0 = 2(1 - q).$$

Any positive scalar multiple is also a stationary measure.

(2) Classify the chain as positive recurrent, null recurrent, or transient. Answer:

- positive recurrent if $q < \frac{1}{2}$;
- null recurrent if $q = \frac{1}{2}$;

- transient if $q > \frac{1}{2}$.

Explanation. If $q < 1/2$, then

$$\frac{q}{1-q} < 1,$$

so the stationary measure has finite total mass and can be normalized to a stationary distribution. Hence the chain is positive recurrent.

If $q = 1/2$, the chain behaves like simple symmetric random walk on $\mathbb{Z}_+$ with reflection at 0. This is recurrent, but the stationary measure has infinite mass, so it is null recurrent.

If $q > 1/2$, the chain has positive drift to the right. Using the gambler's ruin formula for

$$p_{i,N} := \mathbb{P}_i(T_0 > T_N),$$

and letting $N \to \infty$, one gets

$$\mathbb{P}_i(\text{never hit } 0) = 1 - \left(\frac{1-q}{q}\right)^i > 0.$$

So the chain is transient.

Question 4 [28 points]

Let $(B_t)_{t\geq 0}$ be standard Brownian motion.

(1) Compute

$$\lim_{N\to\infty} \sum_{i=0}^{N-1} B_{(i+1)/N}\Big(B_{(i+1)/N} - B_{i/N}\Big).$$

Answer:

$$\frac{1}{2}B_1^2 + \frac{1}{2}.$$

Explanation. Split the right-endpoint term into a left-endpoint term plus a quadratic-variation term:

$$B_{(i+1)/N}\big(B_{(i+1)/N} - B_{i/N}\big) = B_{i/N}\big(B_{(i+1)/N} - B_{i/N}\big) + \big(B_{(i+1)/N} - B_{i/N}\big)^2.$$

Summing and taking limits gives

$$\int_0^1 B_t\, dB_t + \langle B\rangle_1.$$

Now

$$\int_0^1 B_t\, dB_t = \frac{1}{2}B_1^2 - \frac{1}{2}$$

by Itô's formula, and

$$\langle B\rangle_1 = 1.$$

Therefore the limit is

$$\frac{1}{2}B_1^2 - \frac{1}{2} + 1 = \frac{1}{2}B_1^2 + \frac{1}{2}.$$

(2) Suppose $dX_t = f(X_t)\,dB_t$ and

$$M_t := e^{X_t} - \int_0^t h(X_s)\,ds$$

is a martingale. Find h and write $M_t - M_0$ as an Itô integral.

Answer:

$$h(x) = \frac{1}{2}e^x f(x)^2, \qquad M_t - M_0 = \int_0^t e^{X_s} f(X_s)\,dB_s.$$

Explanation. Apply Itô's formula to e^{X_t}:

$$d(e^{X_t}) = e^{X_t}\,dX_t + \frac{1}{2}e^{X_t}\,d\langle X\rangle_t.$$

Since

$$dX_t = f(X_t)\,dB_t, \qquad d\langle X\rangle_t = f(X_t)^2\,dt,$$

we get

$$d(e^{X_t}) = e^{X_t} f(X_t)\,dB_t + \frac{1}{2}e^{X_t} f(X_t)^2\,dt.$$

So the drift term is exactly

$$h(x) = \frac{1}{2}e^x f(x)^2,$$

and subtracting it leaves the Itô integral.

(3) Let $M := \max_{0\le t\le 1} B_t$. Compute

$$\mathbb{E}\big[B_1 \mathbf{1}_{\{M\ge a\}}\big].$$

Answer:

$$\mathbb{E}\big[B_1 \mathbf{1}_{\{M\ge a\}}\big] = 2a\,\mathbb{P}(B_1 \ge a) = \frac{2a}{\sqrt{2\pi}}\int_a^\infty e^{-x^2/2}\,dx.$$

Explanation. Let

$$T := \inf\{t \ge 0 : B_t \ge a\}.$$

Then

$$\{M \ge a\} = \{T \le 1\}.$$

By the strong Markov property, conditional on $T \le 1$ and the path up to time T, the increment $B_1 - B_T$ has mean 0. Since $B_T = a$,

$$\mathbb{E}[B_1 \mid T \le 1] = a.$$

Therefore

$$\mathbb{E}[B_1 \mathbf{1}_{\{M\ge a\}}] = \mathbb{P}(T \le 1)\,a.$$

By the reflection principle,

$$\mathbb{P}(T \le 1) = 2\mathbb{P}(B_1 \ge a),$$

which gives the result.

(4) Suppose $X_0 = 0$ and

$$dX_t = \frac{1}{X_t + 1}\, dt + dB_t,$$

and $X_t > -1$ always. Show that

$$M_t = (X_t + 1)^2 - 3t$$

is a martingale, and compute

$$\mathbb{E}[\tau], \qquad \tau := \inf\{t > 0 : X_t \geq 2\}.$$

Answer:

$$M_t \text{ is a martingale}, \qquad \mathbb{E}[\tau] = \frac{8}{3}.$$

Explanation. Apply Itô's formula to $f(x) = (x + 1)^2$:

$$d\big((X_t + 1)^2\big) = 2(X_t + 1)\, dX_t + d\langle X\rangle_t.$$

Since $d\langle X\rangle_t = dt$ and

$$dX_t = \frac{1}{X_t + 1}\, dt + dB_t,$$

we obtain

$$d\big((X_t + 1)^2\big) = 2dt + 2(X_t + 1)\, dB_t + dt = 3dt + 2(X_t + 1)\, dB_t.$$

Hence

$$dM_t = 2(X_t + 1)\, dB_t,$$

so M_t is a martingale.

At the stopping time τ, we have $X_\tau = 2$, so

$$M_\tau = 9 - 3\tau.$$

Under the integrability condition justified in the official solution, optional stopping gives

$$M_0 = \mathbb{E}[M_\tau].$$

Because $X_0 = 0$,

$$M_0 = (0 + 1)^2 = 1.$$

Thus

$$1 = 9 - 3\mathbb{E}[\tau], \qquad \mathbb{E}[\tau] = \frac{8}{3}.$$

Question 5 [8 points]

Let $(N(t))_{t\geq 0}$ be a Poisson process with intensity $\lambda > 0$. Let

$$0 < T_1 < T_2 < \cdots < T_{N(t)} \leq t$$

be the arrival times in $[0, t]$. Compute

$$\mathbb{E}\left[\exp\left(-\sum_{i=1}^{N(t)} T_i\right)\right].$$

Answer:

$$\exp\big(\lambda(1 - t - e^{-t})\big).$$

Explanation. Condition on $N(t) = n$. Given $N(t) = n$, the arrival times are i.i.d. uniform on $[0, t]$. Therefore

$$\mathbb{E}\left[\exp\left(-\sum_{i=1}^{N(t)} T_i\right)\middle| N(t) = n\right] = \big(\mathbb{E}[e^{-T}]\big)^n,$$

where $T \sim \mathrm{Unif}[0, t]$. Now

$$\mathbb{E}[e^{-T}] = \frac{1}{t}\int_0^t e^{-s}\,ds = \frac{1 - e^{-t}}{t}.$$

Hence

$$\mathbb{E}\left[\exp\left(-\sum_{i=1}^{N(t)} T_i\right)\right] = \sum_{n=0}^{\infty}\left(\frac{1 - e^{-t}}{t}\right)^n e^{-\lambda t}\frac{(\lambda t)^n}{n!}.$$

Recognizing the exponential series,

$$= e^{-\lambda t}\exp\big(\lambda(1 - e^{-t})\big) = \exp\big(\lambda(1 - t - e^{-t})\big).$$

Question 6 [17 points]

Let μ be a probability distribution on $[0, 1)$. Define intervals recursively by halving and choosing left/right with probability $1/2$, and set

$$X_n := 2^n\,\mathbb{P}_{Z\sim\mu}(a_n \leq Z < b_n).$$

(1) Show there exists X_∞ such that $X_n \to X_\infty$ almost surely. **Answer:** Such an X_∞ exists almost surely.

Explanation. Let $\mathcal{F}_n$ be the information generated by the first n interval choices. Then

$$\mathbb{E}[X_{n+1} \mid \mathcal{F}_n] = \frac{1}{2}\cdot 2^{n+1}\,\mu\big([a_n, \tfrac{a_n+b_n}{2})\big) + \frac{1}{2}\cdot 2^{n+1}\,\mu\big([\tfrac{a_n+b_n}{2}, b_n)\big) = X_n.$$

So (X_n) is a martingale. Also $X_n \geq 0$, hence by the nonnegative martingale convergence theorem,

$$X_n \to X_\infty \qquad \text{a.s.}$$

for some random variable X_∞.

(2) Construct μ such that the convergence is not in L^1. Answer: Take

$$\mu = \delta_{1/2}.$$

Explanation. If all mass is concentrated at $1/2$, then on most interval choices the selected interval eventually misses $1/2$, so $X_n = 0$ there. In fact,

$$X_n \to 0 \qquad \text{a.s.}$$

but

$$\mathbb{E}[X_n] = \mathbb{E}[X_0] = 1 \qquad \text{for all } n.$$

Therefore X_n cannot converge to 0 in L^1.

(3) Suppose μ has density p_μ on $[0,1]$. Find X_∞ and prove L^1 convergence. Answer:

$$X_\infty = p_\mu(U), \qquad U \sim \text{Unif}[0,1].$$

Moreover,

$$X_n \to X_\infty \qquad \text{in } L^1.$$

Explanation. The nested dyadic intervals $[a_n, b_n)$ shrink to a random point U that is uniform on $[0,1]$. Also,

$$X_n = \frac{1}{b_n - a_n} \int_{a_n}^{b_n} p_\mu(z)\, dz.$$

So X_n is the average value of the density over a shrinking interval around U, and the limit is

$$X_\infty = p_\mu(U).$$

A very useful representation is

$$X_n = \mathbb{E}[p_\mu(U) \mid \mathcal{F}_n],$$

so (X_n) is a Doob martingale. Since the terminal random variable $p_\mu(U)$ is integrable, the Doob martingale is uniformly integrable, and thus

$$X_n \to X_\infty \qquad \text{in } L^1.$$

16. Final Review

This section is a proof-free review in course order. The goal here is to collect the actual theorem and definition statements that are most useful for final preparation, while still keeping the main examples and exercise types visible. Everything is stated in a compact "review-sheet" style, with no proofs.

16.1. Lecture 1: Discrete-time Markov chains

Definition 16.1 (Discrete-time Markov chain)**.** Let S be a finite or countable state space. A stochastic process $(X_n)_{n\geq 0}$ taking values in S is a discrete-time Markov chain if there is an initial distribution ν and a transition matrix $P = (p_{ij})_{i,j\in S}$ such that for all $n \geq 0$ and all states $x_0, \ldots, x_n, j \in S$,

$$\mathbb{P}(X_{n+1} = j \mid X_0 = x_0, \ldots, X_n = x_n) = \mathbb{P}(X_{n+1} = j \mid X_n = x_n) = p_{x_n j}.$$

Definition 16.2 (n-step transition probabilities)**.** For $n \geq 0$, define

$$p_{ij}^{(n)} := \mathbb{P}(X_n = j \mid X_0 = i), \qquad P^{(n)} = (p_{ij}^{(n)})_{i,j\in S}.$$

In particular, $P^{(1)} = P$ and $P^{(0)} = I$.

Theorem 16.3 (Chapman–Kolmogorov equation)**.** *For all $m, n \geq 0$ and $i, j \in S$,*

$$p_{ij}^{(m+n)} = \sum_{k\in S} p_{ik}^{(m)} p_{kj}^{(n)}.$$

Equivalently,

$$P^{(m+n)} = P^{(m)} P^{(n)}.$$

Definition 16.4 (Accessibility, communication, irreducibility)**.** For states $i, j \in S$:

- we write $i \to j$ if there exists $n \geq 0$ such that $p_{ij}^{(n)} > 0$;
- we write $i \leftrightarrow j$ if $i \to j$ and $j \to i$;
- the chain is called *irreducible* if $i \leftrightarrow j$ for every $i, j \in S$.

Definition 16.5 (Stationary distribution)**.** A probability distribution $\pi = (\pi_i)_{i\in S}$ on S is called stationary if

$$\pi P = \pi,$$

that is,

$$\pi_j = \sum_{i\in S} \pi_i p_{ij} \qquad \text{for every } j \in S.$$

Standard examples / exercises.

- random walk on a circle;
- computing multi-step probabilities using P^n;
- checking whether states communicate;
- checking whether a probability vector is stationary.

16.2. Lecture 2: Recurrence criterion and first-step methods

Definition 16.6 (Return probability and recurrence)**.** For a state $i \in S$, define

$$T_i^+ := \inf\{n \geq 1 : X_n = i\}$$

and

$$f_{ii} := \mathbb{P}_i(T_i^+ < \infty).$$

The state i is called *recurrent* if $f_{ii} = 1$, and *transient* if $f_{ii} < 1$.

Theorem 16.7 (Recurrence criterion)**.** *For any state $i \in S$,*

$$i \text{ is recurrent} \iff \sum_{n=1}^{\infty} p_{ii}^{(n)} = \infty.$$

Equivalently,

$$i \text{ is transient} \iff \sum_{n=1}^{\infty} p_{ii}^{(n)} < \infty.$$

Proposition 16.8 (Expected number of visits)**.** *Let*

$$N(j) := \sum_{n=0}^{\infty} \mathbf{1}_{\{X_n = j\}}$$

be the total number of visits to the state j. Then for any $i, j \in S$,

$$\mathbb{E}_i[N(j)] = \sum_{n=0}^{\infty} p_{ij}^{(n)}.$$

If j is transient, then

$$\mathbb{E}_i[N(j)] = \frac{f_{ij}}{1 - f_{jj}}.$$

Proposition 16.9 (First-step expansion for hitting probabilities)**.** *Fix a state $j \in S$ and define*

$$f_{ij} := \mathbb{P}_i(T_j < \infty), \qquad T_j := \inf\{n \geq 0 : X_n = j\}.$$

Then

$$f_{jj} = 1,$$

and for $i \neq j$,

$$f_{ij} = \sum_{k \in S} p_{ik} f_{kj} = p_{ij} + \sum_{k \neq j} p_{ik} f_{kj}.$$

Proposition 16.10 (First-step expansion for expected hitting times)**.** *Fix a state $j \in S$ and define*

$$g_i := \mathbb{E}_i[T_j].$$

Then

$$g_j = 0,$$

and for $i \neq j$,

$$g_i = 1 + \sum_{k \in S} p_{ik} g_k.$$

Standard examples / exercises.

- computing f_{ij} by conditioning on the first step;
- expected number of visits via

$$\mathbb{E}_i[N(j)] = \frac{f_{ij}}{1 - f_{jj}} \quad \text{when } j \text{ is transient;}$$

- gambler's ruin style boundary-value equations;
- recurrence/transience of simple random walk examples.

16.3. Lecture 3: Irreducible chains

Theorem 16.11 (Class property of recurrence / transience)**.** *If $i \leftrightarrow j$, then i is recurrent if and only if j is recurrent. Equivalently, if $i \leftrightarrow j$, then i is transient if and only if j is transient.*

Theorem 16.12 (Equivalent forms of recurrence)**.** *For any state $j \in S$, the following are equivalent:*

(i) *j is recurrent;*

(ii) $\sum_{n=1}^{\infty} p_{jj}^{(n)} = \infty$*;*

(iii) $\mathbb{P}_j(N(j) = \infty) = 1$*.*

Theorem 16.13 (Equivalent forms of transience)**.** *For any state $j \in S$, the following are equivalent:*

(i) *j is transient;*

(ii) $\sum_{n=1}^{\infty} p_{jj}^{(n)} < \infty$*;*

(iii) $\mathbb{P}_j(N(j) < \infty) = 1$*;*

(iv) $\mathbb{E}_j[N(j)] < \infty$*.*

Proposition 16.14 (Expected visits in an irreducible chain)**.** *If an irreducible chain is recurrent, then for every pair of states i, j,*

$$\sum_{n=0}^{\infty} p_{ij}^{(n)} = \infty.$$

If it is transient, then for every pair of states i, j,

$$\sum_{n=0}^{\infty} p_{ij}^{(n)} < \infty.$$

Standard examples / exercises.

- biased random walk on $\mathbb{Z}$ as an irreducible but transient chain;
- using communication to move recurrence information between states;
- deciding whether statements involving $f_{ij} = 1$ are true or false.

16.4. Lecture 4: Stationarity and convergence

Definition 16.15 (Stationary measure)**.** A nonnegative function $\mu = (\mu_i)_{i \in S}$ is called a stationary measure if

$$\mu P = \mu.$$

Unlike a stationary distribution, we do not require $\sum_i \mu_i = 1$.

Proposition 16.16 (Detailed balance implies stationarity)**.** *Suppose π is a probability distribution on S satisfying*

$$\pi_i p_{ij} = \pi_j p_{ji} \qquad \text{for all } i, j \in S.$$

Then π is a stationary distribution.

Theorem 16.17 (Finite irreducible chains are positive recurrent)**.** *Every irreducible Markov chain on a finite state space has a unique stationary distribution, and every state is positive recurrent.*

Theorem 16.18 (Markov chain convergence theorem)**.** *If a discrete-time Markov chain is irreducible, aperiodic, and positive recurrent with stationary distribution π, then for every $i, j \in S$,*

$$\lim_{n \to \infty} p_{ij}^{(n)} = \pi_j.$$

Theorem 16.19 (Recurrence time theorem)**.** *Let P be irreducible and positive recurrent with stationary distribution π. Then for every state i,*

$$\mathbb{E}_i[T_i^+] = \frac{1}{\pi_i}.$$

More generally, for every pair i, j in an irreducible positive recurrent chain,

$$\mathbb{E}_i[T_j] < \infty.$$

Standard examples / exercises.

- building stationary distributions by symmetry;
- building stationary distributions by detailed balance;
- classifying all stationary distributions in reducible finite chains;
- proving convergence by checking irreducible/aperiodic/positive recurrent.

16.5. Midterm 1 review topics

Most emphasized exercise types.

- classifying states as recurrent or transient in reducible finite chains;
- computing hitting probabilities by f-expansion;
- computing expected visit counts;
- coupling two chains and constructing stationary measures on product spaces;
- proving finite-state irreducible chains have finite moments of return times;
- solving random-walk-type stationary distributions on $\mathbb{Z}$ and applying convergence to stationarity.

16.6. Lecture 5: Martingales and stopping times

Definition 16.20 (Martingale, supermartingale, submartingale)**.** Let $(\mathcal{F}_n)_{n\geq 0}$ be a filtration. An integrable adapted process $(M_n)_{n\geq 0}$ is a martingale if

$$\mathbb{E}[M_{n+1} \mid \mathcal{F}_n] = M_n \qquad \text{a.s. for all } n \geq 0.$$

It is a supermartingale if

$$\mathbb{E}[M_{n+1} \mid \mathcal{F}_n] \leq M_n,$$

and a submartingale if

$$\mathbb{E}[M_{n+1} \mid \mathcal{F}_n] \geq M_n.$$

Definition 16.21 (Stopping time)**.** A random time $T : \Omega \to \{0, 1, 2, \ldots, \infty\}$ is a stopping time with respect to $(\mathcal{F}_n)$ if for every $n \geq 0$,

$$\{T \leq n\} \in \mathcal{F}_n.$$

Theorem 16.22 (Bounded optional stopping theorem)**.** *Let $(M_n)_{n\geq 0}$ be a martingale and let T be a bounded stopping time. Then*

$$\mathbb{E}[M_T] = \mathbb{E}[M_0].$$

More generally, if $S \le T$ are bounded stopping times, then

$$\mathbb{E}[M_T \mid \mathcal{F}_S] = M_S \qquad a.s.$$

Theorem 16.23 (Optional stopping under integrability assumptions)**.** *Let (M_n) be a martingale and T a stopping time. If one of the standard hypotheses ensuring passage to the limit holds—for example, T is bounded, or $(M_{n\wedge T})$ is uniformly integrable, or the stopped process is dominated by an integrable random variable—then*

$$\mathbb{E}[M_T] = \mathbb{E}[M_0].$$

Standard examples / exercises.

- checking whether a process is a martingale by conditional expectation;
- proving a random time is or is not a stopping time;
- applying optional stopping to gambler's ruin and first-hitting problems.

16.7. Lecture 6: Uniform integrability, Wald, maximal inequalities

Definition 16.24 (Uniform integrability)**.** A family of integrable random variables $\mathcal{X}$ is uniformly integrable if

$$\lim_{K\to\infty} \sup_{X\in\mathcal{X}} \mathbb{E}\big[|X|\mathbf{1}_{\{|X|>K\}}\big] = 0.$$

A sequence (X_n) is uniformly integrable if the family $\{X_n : n \ge 0\}$ is uniformly integrable.

Proposition 16.25 (A sufficient condition for UI)**.** *If there exists an integrable random variable Y such that*

$$|X_n| \le Y \qquad a.s. \text{ for all } n,$$

then (X_n) is uniformly integrable.

Theorem 16.26 (Wald's identity)**.** *Let $(\xi_k)_{k\ge1}$ be i.i.d. integrable random variables with $\mathbb{E}[\xi_1] = m$, and let T be a stopping time such that the hypotheses of optional stopping apply to the martingale*

$$M_n := \sum_{k=1}^{n} \xi_k - nm.$$

Then

$$\mathbb{E}\Big[\sum_{k=1}^{T} \xi_k\Big] = m\,\mathbb{E}[T].$$

Theorem 16.27 (Doob's maximal inequality: nonnegative case)**.** *If $(M_n)_{n\ge0}$ is a nonnegative submartingale, then for every $\lambda > 0$ and every n,*

$$\lambda\,\mathbb{P}\Big(\max_{0\le k\le n} M_k \ge \lambda\Big) \le \mathbb{E}[M_n].$$

Theorem 16.28 (L^2 martingale convergence)**.** *If $(M_n)_{n\geq 0}$ is a martingale and*

$$\sup_{n\geq 0} \mathbb{E}[M_n^2] < \infty,$$

then there exists a random variable $M_\infty \in L^2$ such that

$$M_n \to M_\infty \quad \text{a.s. and in } L^2.$$

In particular,

$$M_n = \mathbb{E}[M_\infty \mid \mathcal{F}_n].$$

Standard examples / exercises.

- checking UI or failure of UI;
- stopped martingales and bounded stopped processes;
- geometric-type stopping times and Wald's identity;
- tail bounds from Doob's inequality.

16.8. Lecture 7: Martingale convergence and UI

Theorem 16.29 (Martingale convergence theorem: nonnegative / one-sided bounded case)**.** *If $(M_n)_{n\geq 0}$ is a nonnegative supermartingale, then there exists an integrable random variable M_∞ such that*

$$M_n \to M_\infty \qquad \text{a.s.}$$

The same conclusion holds for a martingale that is bounded below by an integrable random variable.

Theorem 16.30 (Up-crossing inequality)**.** *Let (X_n) be a submartingale and let $a < b$. Denote by $U_n[a,b]$ the number of completed up-crossings of the interval $[a,b]$ by time n. Then*

$$(b-a)\,\mathbb{E}[U_n[a,b]] \leq \mathbb{E}[(X_n - a)^+] - \mathbb{E}[(X_0 - a)^+].$$

Theorem 16.31 (Uniform integrability and L^1 convergence)**.** *Let $(M_n)_{n\geq 0}$ be a martingale. The following are equivalent:*

(i) (M_n) is uniformly integrable;

(ii) there exists an integrable random variable M_∞ such that

$$M_n \to M_\infty \quad \text{in } L^1;$$

(iii) there exists an integrable random variable M_∞ such that for every n,

$$M_n = \mathbb{E}[M_\infty \mid \mathcal{F}_n].$$

In this case,

$$\mathbb{E}[M_\infty] = \mathbb{E}[M_0].$$

Theorem 16.32 (Doob's L^p maximal inequality)**.** *If $(M_n)_{n\geq 0}$ is a martingale and $p > 1$, then*

$$\left\| \max_{0\leq k\leq n} |M_k| \right\|_p \leq \frac{p}{p-1} \|M_n\|_p.$$

Theorem 16.33 (Optional stopping for UI martingales)**.** *Let (M_n) be a uniformly integrable martingale and let T be a stopping time. If M_T is integrable, then*

$$\mathbb{E}[M_T] = \mathbb{E}[M_0].$$

If $S \leq T$ are stopping times and the relevant conditional expectations are integrable, then

$$\mathbb{E}[M_T \mid \mathcal{F}_S] = M_S \qquad a.s.$$

Standard examples / exercises.

- proving almost sure convergence from lower bounds or nonnegativity;
- giving counterexamples where a.s. convergence does not imply L^1 convergence;
- using UI to justify optional stopping at unbounded times.

16.9. Midterm 2 review topics

Most emphasized exercise types.

- nonnegative martingales that converge a.s. but are not UI;
- stopped multiplicative martingales and hitting probabilities;
- exponential martingales for random walk;
- maximal inequalities for tail bounds;
- branching-process-style martingales and extinction arguments;
- Wald's identity for random sums.

16.10. Lecture 8: Brownian motion and Itô integral

Definition 16.34 (Standard Brownian motion)**.** A process $(B_t)_{t\geq 0}$ is a standard Brownian motion if:

(i) $B_0 = 0$ almost surely;

(ii) $(B_t)_{t\geq 0}$ has continuous sample paths almost surely;

(iii) for $0 \le s < t$, the increment $B_t - B_s$ is Gaussian with mean 0 and variance $t - s$;

(iv) increments over disjoint time intervals are independent.

Theorem 16.35 (Brownian motion is a martingale)**.** *With respect to its natural filtration* $(\mathcal{F}_t^B)$*, Brownian motion satisfies*

$$\mathbb{E}[B_t \mid \mathcal{F}_s^B] = B_s \qquad \textit{for all } 0 \le s \le t.$$

Thus $(B_t)_{t\ge 0}$ *is a martingale.*

Theorem 16.36 (Markov and strong Markov properties of Brownian motion)**.** *Brownian motion is a Markov process: for* $0 \le s < t$*,*

$$\mathbb{P}(B_t \in A \mid \mathcal{F}_s^B) = \mathbb{P}(B_t \in A \mid B_s) \qquad a.s.$$

Moreover, if T *is a stopping time, then the shifted process*

$$(B_{T+t} - B_T)_{t\ge 0}$$

is independent of $\mathcal{F}_T$ *and is again a standard Brownian motion.*

Definition 16.37 (Continuous-time stopping time)**.** A random time $T : \Omega \to [0, \infty]$ is a stopping time with respect to a filtration $(\mathcal{F}_t)_{t\ge 0}$ if

$$\{T \le t\} \in \mathcal{F}_t \qquad \text{for every } t \ge 0.$$

Theorem 16.38 (Reflection principle)**.** *For standard Brownian motion and* $a > 0$*,*

$$\mathbb{P}\Big(\max_{0\le s\le t} B_s \ge a\Big) = 2\mathbb{P}(B_t \ge a).$$

Equivalently,

$$\mathbb{P}\Big(\max_{0\le s\le t} B_s < a\Big) = 1 - 2\mathbb{P}(B_t \ge a).$$

A more general reflected-path identity also gives joint laws involving $\max_{s\le t} B_s$ *and* B_t*.*

Definition 16.39 (Itô integral)**.** Let $(Y_t)_{t\ge 0}$ be an adapted process satisfying

$$\mathbb{E}\Big[\int_0^T Y_t^2\, dt\Big] < \infty.$$

The Itô integral

$$\int_0^T Y_t\, dB_t$$

is defined as the L^2-limit of left-endpoint stochastic sums for adapted simple approximations to Y.

Theorem 16.40 (Basic properties of the Itô integral)**.** *If* (Y_t) *is adapted and square-integrable on* $[0, T]$*, then*

$$M_t := \int_0^t Y_s\, dB_s$$

is a martingale. Moreover,

$$\mathbb{E}\Big[\int_0^T Y_t\,dB_t\Big] = 0$$

and the Itô isometry holds:

$$\mathbb{E}\Big[\Big(\int_0^T Y_t\,dB_t\Big)^2\Big] = \mathbb{E}\Big[\int_0^T Y_t^2\,dt\Big].$$

Standard examples / exercises.

- Brownian gambler's ruin;
- reflection-principle computations involving $\max_{t\le 1} B_t$;
- showing processes of the form $\int_0^t Y_s\,dB_s$ are martingales;
- turning Riemann sums into Itô integrals or ordinary time integrals.

16.11. Lecture 9: Itô's formula and quadratic variation

Theorem 16.41 (Itô's formula for $f(B_t)$)**.** *Suppose $f \in C^2(\mathbb{R})$. Then for every $T \ge 0$,*

$$f(B_T) - f(B_0) = \int_0^T f'(B_t)\,dB_t + \frac{1}{2}\int_0^T f''(B_t)\,dt.$$

Equivalently,

$$df(B_t) = f'(B_t)\,dB_t + \frac{1}{2}f''(B_t)\,dt.$$

Definition 16.42 (One-dimensional Itô process)**.** A process $(Z_t)_{t\ge 0}$ is called an Itô process if it has the form

$$dZ_t = X_t\,dt + Y_t\,dB_t,$$

that is,

$$Z_t = Z_0 + \int_0^t X_s\,ds + \int_0^t Y_s\,dB_s$$

for adapted processes (X_t) and (Y_t).

Definition 16.43 (Quadratic variation)**.** Given a process $(Z_t)_{t\ge 0}$, its quadratic variation, when it exists, is

$$\langle Z\rangle_t = \lim_{N\to\infty}\sum_{i=0}^{N-1}(Z_{t_{i+1}} - Z_{t_i})^2, \qquad t_i = \frac{it}{N}.$$

Proposition 16.44 (Quadratic variation of an Itô process)**.** *If*

$$dZ_t = X_t\,dt + Y_t\,dB_t,$$

then

$$d\langle Z\rangle_t = Y_t^2\,dt, \qquad \langle Z\rangle_t = \int_0^t Y_s^2\,ds.$$

Theorem 16.45 (Itô's formula for $f(Z_t)$)**.** *Let*

$$dZ_t = X_t\,dt + Y_t\,dB_t,$$

and let $f \in C^2(\mathbb{R})$*. Then*

$$df(Z_t) = \left(f'(Z_t)X_t + \frac{1}{2}f''(Z_t)Y_t^2\right)dt + f'(Z_t)Y_t\,dB_t.$$

Equivalently,

$$df(Z_t) = f'(Z_t)\,dZ_t + \frac{1}{2}f''(Z_t)\,d\langle Z\rangle_t.$$

Theorem 16.46 (Time-inhomogeneous Itô formula)**.** *Let*

$$dZ_t = X_t\,dt + Y_t\,dB_t,$$

and let $f \in C^{1,2}$*. Then*

$$df(t,Z_t) = \frac{\partial f}{\partial t}(t,Z_t)\,dt + \frac{\partial f}{\partial z}(t,Z_t)\,dZ_t + \frac{1}{2}\frac{\partial^2 f}{\partial z^2}(t,Z_t)\,d\langle Z\rangle_t.$$

Hence,

$$df(t,Z_t) = \left(\frac{\partial f}{\partial t}(t,Z_t) + X_t\frac{\partial f}{\partial z}(t,Z_t) + \frac{1}{2}Y_t^2\frac{\partial^2 f}{\partial z^2}(t,Z_t)\right)dt + Y_t\frac{\partial f}{\partial z}(t,Z_t)\,dB_t.$$

Proposition 16.47 (Stochastic product rule)**.** *If*

$$dZ_t^{(i)} = X_t^{(i)}\,dt + Y_t^{(i)}\,dB_t, \qquad i = 1,2,$$

then

$$d\big(Z_t^{(1)}Z_t^{(2)}\big) = Z_t^{(1)}\,dZ_t^{(2)} + Z_t^{(2)}\,dZ_t^{(1)} + d\langle Z^{(1)}, Z^{(2)}\rangle_t,$$

where

$$d\langle Z^{(1)}, Z^{(2)}\rangle_t = Y_t^{(1)}Y_t^{(2)}\,dt.$$

Proposition 16.48 (Exponential martingale)**.** *For every* $b \in \mathbb{R}$*,*

$$\left(e^{bB_t - \frac{1}{2}b^2 t}\right)_{t\geq 0}$$

is a martingale.

Standard examples / exercises.

- computing
$$\int_0^t B_s\,dB_s = \frac{1}{2}B_t^2 - \frac{1}{2}t;$$
- deriving martingales by killing the drift in Itô's formula;
- converting right-endpoint Brownian sums into Itô integral plus quadratic variation;

- computing moments or hitting quantities using reflection principle plus strong Markov.

16.12. Lecture 10: SDE examples, Poisson processes, and CTMCs

Proposition 16.49 (Ornstein–Uhlenbeck process)**.** *If (Z_t) satisfies*

$$dZ_t = -Z_t\,dt + dB_t,$$

then

$$Z_t = e^{-t}\left(Z_0 + \int_0^t e^s\,dB_s\right).$$

In particular, Z_t is Gaussian with mean $e^{-t}Z_0$ and variance

$$e^{-2t}\int_0^t e^{2s}\,ds.$$

Proposition 16.50 (Geometric Brownian motion)**.** *If (Z_t) satisfies*

$$dZ_t = rZ_t\,dt + bZ_t\,dB_t, \qquad Z_0 > 0,$$

then

$$Z_t = Z_0 \exp\left(\left(r - \frac{b^2}{2}\right)t + bB_t\right).$$

Theorem 16.51 (Multidimensional Itô formula)**.** *Let $B_t = (B_t^{(1)}, \dots, B_t^{(d)})$ be a d-dimensional Brownian motion with independent coordinates, and let*

$$dZ_t = X_t\,dt + Y_t\,dB_t,$$

where $X_t \in \mathbb{R}^d$ and $Y_t \in \mathbb{R}^{d\times d}$. If $f \in C^{1,2}$, then

$$df(t, Z_t) = \frac{\partial f}{\partial t}(t, Z_t)\,dt + \nabla f(t, Z_t)^\top dZ_t + \frac{1}{2}\operatorname{Tr}\Big(Y_t^\top \nabla^2 f(t, Z_t) Y_t\Big)\,dt.$$

In the special case $Z_t = B_t$,

$$df(t, B_t) = \frac{\partial f}{\partial t}(t, B_t)\,dt + \nabla f(t, B_t)^\top dB_t + \frac{1}{2}\Delta_x f(t, B_t)\,dt.$$

Definition 16.52 (Poisson process)**.** A process $(N(t))_{t\geq 0}$ is a Poisson process with intensity $\lambda > 0$ if:

(i) $N(0) = 0$;

(ii) $N(t)$ has independent increments;

(iii) for $0 \leq s < t$,

$$N(t) - N(s) \sim \mathrm{Poi}(\lambda(t-s)).$$

In particular,

$$N(t) \sim \mathrm{Poi}(\lambda t).$$

Proposition 16.53 (Basic properties of a Poisson process)**.** *If $(N(t))$ is a Poisson process with intensity λ, then:*

- $N(t+s) - N(t) \sim \mathrm{Poi}(\lambda s)$ *and is independent of the past;*
- *the interarrival times are i.i.d.* $\mathrm{Exp}(\lambda)$*;*
- *the process*
$$(N(t) - \lambda t)_{t \geq 0}$$
is a martingale.

Theorem 16.54 (Conditional law of arrival times)**.** *Let $0 < T_1 < \cdots < T_{N(t)} \leq t$ be the arrival times of a Poisson process on $[0,t]$. Conditional on $N(t) = n$, the unordered arrival times are i.i.d.* $\mathrm{Unif}([0,t])$*, and the ordered arrival times $(T_1, \ldots, T_n)$ have the law of the order statistics of n i.i.d.* $\mathrm{Unif}([0,t])$ *random variables.*

Definition 16.55 (Poisson point process)**.** Let S be a measurable space with intensity function $\lambda(x)$. A Poisson point process on S is a random counting measure N such that for every measurable set $A \subseteq S$,
$$N(A) \sim \mathrm{Poi}\left(\int_A \lambda(x)\, dx\right),$$
and for disjoint measurable sets $A_1, \ldots, A_m$, the random variables $N(A_1), \ldots, N(A_m)$ are independent.

Proposition 16.56 (Superposition and thinning)**.** *Let $(N_1(t))$ and $(N_2(t))$ be independent Poisson processes with intensities λ_1 and λ_2.*

- *Then $(N_1(t) + N_2(t))$ is a Poisson process with intensity $\lambda_1 + \lambda_2$.*
- *If $(N(t))$ is a Poisson process with intensity λ and each arrival is independently labelled type i with probability p_i, then the type-i counting process is a Poisson process with intensity λp_i, and these type processes are independent.*

Definition 16.57 (Continuous-time Markov chain)**.** A process $(X_t)_{t \geq 0}$ with values in a finite or countable state space S is a continuous-time Markov chain if for every $s, t \geq 0$,
$$\mathbb{P}(X_{t+s} = j \mid \mathcal{F}_t) = \mathbb{P}(X_{t+s} = j \mid X_t) \qquad \text{a.s.}$$
The transition probabilities are denoted
$$p_{ij}^{(t)} := \mathbb{P}(X_t = j \mid X_0 = i).$$

Definition 16.58 (Generator)**.** The generator $G = (g_{ij})_{i,j \in S}$ of a continuous-time Markov chain is defined by
$$g_{ij} := \lim_{t \downarrow 0} \frac{p_{ij}^{(t)} - \delta_{ij}}{t},$$
whenever the limit exists.

Proposition 16.59 (Basic properties of the generator)**.** *For every state $i \in S$,*

$$g_{ii} \leq 0, \qquad g_{ij} \geq 0 \text{ for } j \neq i, \qquad \sum_{j \in S} g_{ij} = 0.$$

Theorem 16.60 (Semigroup / matrix exponential relation)**.** *If G is the generator of a continuous-time Markov chain, then under the usual conditions,*

$$P^{(t)} = e^{tG} \qquad \text{for all } t \geq 0,$$

where

$$e^{tG} = I + tG + \frac{t^2 G^2}{2!} + \frac{t^3 G^3}{3!} + \cdots .$$

Standard examples / exercises.

- computing expectations by conditioning on $N(t)$;
- using arrival-time uniformity on $[0, t]$;
- identifying whether a Poisson-process expression is a martingale;
- last-arrival / type-label problems via superposition-thinning;
- reading jump rates from a generator.

17. Important Theorems for Midterms and Finals

This section gives the *actual theorem statements* and core formulas, rather than only listing theorem names. I only include the results that were directly used, quoted, or heavily relied on in the midterms and the two finals.

17.1. Discrete-time Markov chains

Proposition 17.1 (First-step expansion for hitting probabilities)**.** *Let $A \subseteq S$ and define*

$$T_A := \inf\{n \geq 0 : X_n \in A\}.$$

Let

$$u_i := \mathbb{P}_i(T_A < \infty).$$

Then

$$\nu_i = 1 \quad \text{for } i \in A,$$

and for every $i \notin A$,

$$\nu_i = \sum_{j \in S} p_{ij}\, \nu_j.$$

In particular, for a single target state j,

$$f_{ij} = p_{ij} + \sum_{k \neq j} p_{ik} f_{kj}.$$

Most relevant for: Midterm 1 hitting-probability questions, Final 2024 Question 2(1), Final 2025 Question 2(2).

Proposition 17.2 (First-step expansion for expected hitting times)**.** *Let $A \subseteq S$ and define*

$$T_A := \inf\{n \geq 0 : X_n \in A\}.$$

If

$$h_i := \mathbb{E}_i[T_A]$$

is finite, then

$$h_i = 0 \quad \text{for } i \in A,$$

and for every $i \notin A$,

$$h_i = 1 + \sum_{j \in S} p_{ij} h_j.$$

Most relevant for: standard boundary-value computations for hitting times and return times.

Proposition 17.3 (Expected number of visits)**.** *Fix $j \in S$, and define the total number of visits*

to j by

$$N(j) := \sum_{n=0}^{\infty} \mathbf{1}_{\{X_n = j\}}.$$

Then for every starting state i,

$$\mathbb{E}_i[N(j)] = \sum_{n=0}^{\infty} p_{ij}^{(n)}.$$

If j is transient, then

$$\mathbb{E}_j[N(j)] = \frac{1}{1 - f_{jj}}, \qquad \mathbb{E}_i[N(j)] = \frac{f_{ij}}{1 - f_{jj}}.$$

Most relevant for: Midterm 1 and true/false questions on recurrence/transience.

Theorem 17.4 (Recurrence criterion)**.** *For a state i, the following are equivalent:*

(i) *i is recurrent;*

(ii) $\sum_{n=1}^{\infty} p_{ii}^{(n)} = \infty$*;*

(iii) $\mathbb{P}_i(X_n = i$ *infinitely often*$) = 1$*.*

Also, the following are equivalent:

(i) *i is transient;*

(ii) $\sum_{n=1}^{\infty} p_{ii}^{(n)} < \infty$*;*

(iii) $\mathbb{P}_i(X_n = i$ *infinitely often*$) = 0$*.*

Most relevant for: Midterm 1 Question 1, Final 2024 Question 1, Final 2025 Questions 1 and 3.

Theorem 17.5 (Class property in irreducible chains)**.** *If a Markov chain is irreducible, then recurrence/transience is a class property: either every state is recurrent, or every state is transient. Moreover, positive recurrence is also a class property: if one state is positive recurrent, then every state is positive recurrent.*

Most relevant for: many true/false questions and all irreducible-chain classification problems.

Proposition 17.6 (Detailed balance implies stationarity)**.** *Let $\mu = (\mu_i)_{i \in S}$ be a nonnegative measure on S. If*

$$\mu_i p_{ij} = \mu_j p_{ji} \qquad \text{for all } i, j \in S,$$

then μ is a stationary measure, i.e.

$$\mu P = \mu.$$

If in addition $\sum_{i \in S} \mu_i < \infty$, then the normalized vector

$$\pi_i := \frac{\mu_i}{\sum_{k \in S} \mu_k}$$

is a stationary distribution.

Most relevant for: birth–death chains and reversible chains, especially Final 2024 Question 3 and Final 2025 Question 3.

Theorem 17.7 (Markov chain convergence theorem)**.** *Suppose a Markov chain on a finite or countable state space is irreducible, aperiodic, and positive recurrent, with stationary distribution π. Then for every $i, j \in S$,*

$$\lim_{n\to\infty} p_{ij}^{(n)} = \pi_j.$$

Most relevant for: Midterm 1 convergence questions and Final 2024 Question 3.

Theorem 17.8 (Recurrence time theorem)**.** *Suppose a Markov chain is irreducible and positive recurrent, with stationary distribution π. Define the first return time to i by*

$$T_i^+ := \inf\{n \geq 1 : X_n = i\}.$$

Then

$$\mathbb{E}_i[T_i^+] = \frac{1}{\pi_i}.$$

Most relevant for: Final 2025 Question 2(1), and any expected-return-time computation once π is known.

Proposition 17.9 (Stationary distributions in finite reducible chains)**.** *For a finite-state Markov chain, every stationary distribution assigns zero mass to transient states. If the chain has closed communicating classes $C_1, \dots, C_m$, and each C_r has stationary distribution $\pi^{(r)}$ on that class, then every stationary distribution of the whole chain is of the form*

$$\pi = \sum_{r=1}^{m} \alpha_r \pi^{(r)}, \qquad \alpha_r \geq 0, \qquad \sum_{r=1}^{m} \alpha_r = 1.$$

Most relevant for: Final 2024 Question 2(2).

Proposition 17.10 (Exam-style Foster–Lyapunov recurrence criterion)**.** *Let (X_n) be an irreducible Markov chain on $\{0, 1, 2, \dots\}$ such that $|X_{n+1} - X_n| \leq 1$ almost surely. Suppose there exists a nonnegative, strictly increasing function V with $V(x) \to \infty$ as $x \to \infty$, and a constant $K < \infty$, such that*

$$\sum_{j\in S} p_{ij} V(j) = V(i) \qquad \text{for every } i > K,$$

and

$$\sum_{j\in S} p_{ij} V(j) < \infty \qquad \text{for } i = 0, 1, \dots, K.$$

Then the chain is recurrent.

Proposition 17.11 (Exam-style Foster–Lyapunov positive recurrence criterion)**.** *Under the same setup, if there exist $K < \infty$ and $\varepsilon > 0$ such that*

$$\sum_{j\in S} p_{ij} V(j) \leq V(i) - \varepsilon \qquad \text{for every } i > K,$$

and

$$\sum_{j \in S} p_{ij} V(j) < \infty \qquad \text{for } i = 0, 1, \ldots, K,$$

then the chain is positive recurrent. In particular, it has a stationary distribution.

Most relevant for: Final 2024 Question 6.

17.2. Martingales, stopping times, and convergence

Definition 17.12 (Stopping time)**.** A random time T is a stopping time with respect to a filtration $(\mathcal{F}_n)$ if for every n,

$$\{T \leq n\} \in \mathcal{F}_n.$$

Equivalently, whether or not $T \leq n$ can be decided using only information available by time n.

Most relevant for: Midterm 2 Question 1, Final 2024 Question 1(4), Final 2025 Question 1(4).

Theorem 17.13 (Optional stopping theorem: bounded-time version)**.** *Let $(M_n, \mathcal{F}_n)$ be a martingale, and let T be a bounded stopping time. Then*

$$\mathbb{E}[M_T] = \mathbb{E}[M_0].$$

More generally, if (M_n) is a supermartingale, then

$$\mathbb{E}[M_T] \leq \mathbb{E}[M_0].$$

Theorem 17.14 (Optional stopping theorem: common unbounded-time version)**.** *Let $(M_n, \mathcal{F}_n)$ be a martingale and let T be a stopping time with $T < \infty$ almost surely. If the stopped process $(M_{n \wedge T})_{n \geq 0}$ is uniformly integrable, then*

$$\mathbb{E}[M_T] = \mathbb{E}[M_0].$$

A standard way to verify this in practice is to show that the family $\{M_{n \wedge T} : n \geq 0\}$ is dominated in L^1 by an integrable random variable.

Most relevant for: Midterm 2 Questions 2, 3, 5; Final 2024 Question 4(4); Final 2025 Question 4(4).

Theorem 17.15 (Nonnegative supermartingale convergence theorem)**.** *If $(M_n, \mathcal{F}_n)$ is a nonnegative supermartingale, then there exists an integrable random variable M_∞ such that*

$$M_n \to M_\infty \qquad \text{almost surely.}$$

In particular, every nonnegative martingale converges almost surely.

Most relevant for: Midterm 2 convergence questions, Final 2025 Question 1(5), Final 2025 Question 6(1).

Theorem 17.16 (Uniform integrability and L^1 convergence)**.** *Let $(M_n, \mathcal{F}_n)$ be a martingale.*

(i) If (M_n) is uniformly integrable and $M_n \to M_\infty$ almost surely, then

$$M_n \to M_\infty \quad \text{in } L^1,$$

and

$$M_n = \mathbb{E}[M_\infty \mid \mathcal{F}_n].$$

(ii) If $Y \in L^1$ and $M_n := \mathbb{E}[Y \mid \mathcal{F}_n]$, then (M_n) is a uniformly integrable martingale.

Most relevant for: Midterm 2 UI questions and Final 2025 Question 6(3).

Theorem 17.17 (Doob's maximal inequality)**.** *If $(M_n)_{n=0}^N$ is a nonnegative submartingale and $\lambda > 0$, then*

$$\mathbb{P}\left(\max_{0\le k\le N} M_k \ge \lambda\right) \le \frac{\mathbb{E}[M_N]}{\lambda}.$$

Most relevant for: Midterm 2 maximum-control problems.

Theorem 17.18 (Wald's identity)**.** *Let $Z_1, Z_2, \dots$ be i.i.d. integrable random variables, let*

$$S_n := \sum_{k=1}^{n} Z_k,$$

and let T be a stopping time for the natural filtration of (Z_k). Under the standard hypotheses ensuring optional stopping for the martingale

$$S_n - n\,\mathbb{E}[Z_1],$$

we have

$$\mathbb{E}[S_T] = \mathbb{E}[T]\,\mathbb{E}[Z_1].$$

In particular, this holds whenever T is bounded; it also holds under the usual integrability hypotheses from class.

Most relevant for: Midterm 2 Question 5.

17.3. Brownian motion and stochastic calculus

Theorem 17.19 (Reflection principle)**.** *Let $(B_t)_{t\ge 0}$ be standard Brownian motion, and fix $a > 0$ and $t > 0$. Then*

$$\mathbb{P}\left(\max_{0\le s\le t} B_s \ge a\right) = 2\,\mathbb{P}(B_t \ge a).$$

More generally, for $x > 0$ and $y < x$,

$$\mathbb{P}\left(\max_{0\le s\le t} B_s > x,\ B_t < y\right) = \mathbb{P}(B_t > 2x - y).$$

Most relevant for: Final 2024 Question 4(2), Final 2025 Question 4(3).

Theorem 17.20 (Strong Markov property of Brownian motion)**.** *Let T be a stopping time for the Brownian filtration, with $T < \infty$ almost surely. Then the shifted process*

$$\widetilde{B}_t := B_{T+t} - B_T, \qquad t \geq 0,$$

is a standard Brownian motion independent of $\mathcal{F}_T$.

Most relevant for: Final 2025 Question 4(3), and many hitting-time arguments.

Theorem 17.21 (Quadratic variation)**.** *For standard Brownian motion,*

$$\langle B \rangle_t = t.$$

More generally, if

$$X_t = X_0 + \int_0^t b_s \, ds + \int_0^t \sigma_s \, dB_s,$$

then

$$\langle X \rangle_t = \int_0^t \sigma_s^2 \, ds.$$

Equivalently, in differential form,

$$d\langle X \rangle_t = \sigma_t^2 \, dt.$$

Most relevant for: Final 2024 Question 4(1), Final 2025 Question 4(1)–(2).

Theorem 17.22 (Itô's formula)**.** *Let*

$$X_t = X_0 + \int_0^t b_s \, ds + \int_0^t \sigma_s \, dB_s,$$

and let $f \in C^{1,2}([0,\infty) \times \mathbb{R})$. Then

$$\begin{aligned} f(t, X_t) = f(0, X_0) &+ \int_0^t \frac{\partial f}{\partial s}(s, X_s) \, ds + \int_0^t \frac{\partial f}{\partial x}(s, X_s) \, dX_s \\ &+ \frac{1}{2} \int_0^t \frac{\partial^2 f}{\partial x^2}(s, X_s) \, d\langle X \rangle_s. \end{aligned}$$

Equivalently,

$$\begin{aligned} df(t, X_t) = &\left(\frac{\partial f}{\partial t}(t, X_t) + b_t \frac{\partial f}{\partial x}(t, X_t) + \frac{1}{2} \sigma_t^2 \frac{\partial^2 f}{\partial x^2}(t, X_t) \right) dt \\ &+ \sigma_t \frac{\partial f}{\partial x}(t, X_t) \, dB_t. \end{aligned}$$

Most relevant for: Final 2024 Question 4(1), (3), (4); Final 2025 Question 4(1), (2), (4).

Proposition 17.23 (Itô integrals are martingales)**.** *If $(Y_t)_{t \geq 0}$ is adapted and satisfies*

$$\mathbb{E}\left[\int_0^t Y_s^2 \, ds \right] < \infty,$$

then the process

$$M_t := \int_0^t Y_s \, dB_s$$

is a martingale, and

$$\mathbb{E}[M_t] = 0.$$

Also, the Itô isometry holds:

$$\mathbb{E}[M_t^2] = \mathbb{E}\left[\int_0^t Y_s^2 \, ds\right].$$

Most relevant for: turning a drift-corrected quantity into a martingale after applying Itô's formula.

Proposition 17.24 (Brownian exponential martingale)**.** *For every $\theta \in \mathbb{R}$, the process*

$$M_t := \exp\left(\theta B_t - \frac{1}{2}\theta^2 t\right)$$

is a martingale.

Most relevant for: Midterm 2 exponential-martingale problems and Final 2024 Question 4(3)–(4).

17.4. Poisson processes

Definition 17.25 (Poisson process with rate λ)**.** A counting process $(N(t))_{t\geq 0}$ is a Poisson process with intensity $\lambda > 0$ if

(i) $N(0) = 0$;

(ii) it has independent increments;

(iii) for $0 \leq s < t$,

$$N(t) - N(s) \sim \text{Poisson}(\lambda(t-s)).$$

Proposition 17.26 (Compensated Poisson martingale)**.** *If $(N(t))_{t\geq 0}$ is a Poisson process with rate λ, then*

$$M_t := N(t) - \lambda t$$

is a martingale.

Most relevant for: truth/false questions and checking whether a proposed process is a martingale.

Theorem 17.27 (Conditional law of arrival times given $N(t) = n$)**.** *Let $0 < T_1 < \cdots < T_{N(t)} \leq t$ be the arrival times of a Poisson process in $[0, t]$. Conditionally on $N(t) = n$, the ordered vector $(T_1, \ldots, T_n)$ has joint density*

$$(t_1, \ldots, t_n) \mapsto \frac{n!}{t^n} \quad \text{on } 0 < t_1 < \cdots < t_n < t.$$

Equivalently, conditionally on $N(t) = n$, the ordered arrival times are the order statistics of n i.i.d. $\text{Unif}[0, t]$ *random variables.*

Most relevant for: Final 2025 Question 5.

Theorem 17.28 (Superposition of independent Poisson processes)**.** *If $(N_1(t))_{t\geq 0}$ and $(N_2(t))_{t\geq 0}$ are independent Poisson processes with rates λ_1 and λ_2, then*

$$N(t) := N_1(t) + N_2(t)$$

is a Poisson process with rate $\lambda_1 + \lambda_2$.

Theorem 17.29 (Poisson thinning / type-labeling)**.** *Let $(N(t))_{t\geq 0}$ be a Poisson process with rate λ. Independently for each arrival, assign type 1 with probability p and type 2 with probability $1-p$. Let $N_1(t)$ and $N_2(t)$ be the numbers of arrivals of each type up to time t. Then*

$$N_1 \sim \mathrm{PP}(\lambda p), \qquad N_2 \sim \mathrm{PP}(\lambda(1-p)),$$

and N_1 and N_2 are independent.

Most relevant for: Final 2024 Question 5.

17.5. A few formulas that were especially exam-relevant

For a birth–death chain, detailed balance usually starts from

$$\pi_i p_{i,i+1} = \pi_{i+1} p_{i+1,i}.$$

Once you get a recursive formula for π_i, the only remaining step is normalization.

If you want a martingale from Brownian motion, a very common pattern is:

(i) guess a function $f(t,x)$;

(ii) apply Itô's formula to $f(t, X_t)$;

(iii) choose f so that the dt term disappears.

Then the remainder is an Itô integral, hence a martingale.

If you want to use optional stopping, the real question is never just "is M_t a martingale?" The real question is whether the stopped family is integrable enough for OST to be valid.

18. Common SDEs

This section collects several of the most common stochastic differential equations that appear in probability, stochastic calculus, and mathematical finance. For each one, we state the SDE, give its explicit solution when available, and explain the main idea behind it.

18.1. General form of an SDE

A one-dimensional stochastic differential equation usually has the form

$$dX_t = b(t, X_t)\,dt + \sigma(t, X_t)\,dB_t,$$

where

- $b(t, X_t)$ is called the *drift*,
- $\sigma(t, X_t)$ is called the *diffusion coefficient*,
- $(B_t)_{t\geq 0}$ is a standard Brownian motion.

The drift describes the deterministic trend of the process, while the diffusion term describes the random fluctuation.

In general, not every SDE can be solved explicitly. However, there are several standard examples that appear repeatedly and are important to know well.

18.2. Brownian motion

The simplest SDE is

$$dX_t = dB_t, \qquad X_0 = x.$$

Its solution is simply

$$X_t = x + B_t.$$

So Brownian motion itself is the most basic solution of an SDE.

Since $B_t \sim N(0, t)$, we have

$$X_t \sim N(x, t).$$

18.3. Brownian motion with drift

A slightly more general example is

$$dX_t = \mu\,dt + \sigma\,dB_t, \qquad X_0 = x,$$

where $\mu, \sigma \in \mathbb{R}$ are constants.

Its solution is

$$X_t = x + \mu t + \sigma B_t.$$

Therefore

$$X_t \sim N(x + \mu t, \sigma^2 t).$$

This process behaves like Brownian motion, but with an additional deterministic trend μt.

18.4. Geometric Brownian motion

One of the most important multiplicative models is

$$dX_t = \mu X_t\,dt + \sigma X_t\,dB_t, \qquad X_0 = x > 0.$$

This is called *geometric Brownian motion*. It is the classical model for stock prices in the Black–Scholes theory.

Proposition 18.1. *The solution of*

$$dX_t = \mu X_t\,dt + \sigma X_t\,dB_t, \qquad X_0 = x > 0,$$

is

$$X_t = x\exp\left(\left(\mu - \frac{1}{2}\sigma^2\right)t + \sigma B_t\right).$$

Idea. Apply Itô's formula to $f(x) = \log x$. Then

$$d(\log X_t) = \left(\mu - \frac{1}{2}\sigma^2\right)dt + \sigma\,dB_t.$$

Integrating both sides gives

$$\log X_t = \log x + \left(\mu - \frac{1}{2}\sigma^2\right)t + \sigma B_t.$$

Exponentiating yields the result. □

This example is important because it shows the typical Itô correction:

$$\mu \quad \longrightarrow \quad \mu - \frac{1}{2}\sigma^2$$

after taking logarithms.

18.5. Exponential martingale

A closely related process is

$$M_t := \exp\left(bB_t - \frac{1}{2}b^2 t\right), \qquad b \in \mathbb{R}.$$

This process satisfies the SDE

$$dM_t = bM_t\,dB_t, \qquad M_0 = 1.$$

Proposition 18.2. *The process*

$$M_t = \exp\left(bB_t - \frac{1}{2}b^2 t\right)$$

is a martingale.

Idea. Apply Itô's formula to

$$f(t,z) = \exp\left(bz - \frac{1}{2}b^2 t\right).$$

The drift term cancels exactly, leaving

$$dM_t = bM_t\,dB_t.$$

Any process of the form

$$M_t = M_0 + \int_0^t H_s\,dB_s$$

is a local martingale, and in this case it is in fact a true martingale. □

18.6. Ornstein–Uhlenbeck process

A very important mean-reverting process is

$$dX_t = \theta(\mu - X_t)\,dt + \sigma\,dB_t, \qquad \theta > 0.$$

Equivalently,

$$dX_t = (-\theta X_t + \theta\mu)\,dt + \sigma\,dB_t.$$

This is called the *Ornstein–Uhlenbeck process*. The drift pulls the process back toward the level μ, so it is a standard model of mean reversion.

Proposition 18.3. *The solution of*

$$dX_t = \theta(\mu - X_t)\,dt + \sigma\,dB_t, \qquad X_0 = x,$$

is

$$X_t = \mu + e^{-\theta t}(x-\mu) + \sigma e^{-\theta t}\int_0^t e^{\theta s}\,dB_s.$$

Idea. Rewrite the SDE as

$$dX_t + \theta X_t\,dt = \theta\mu\,dt + \sigma\,dB_t.$$

Multiply by the integrating factor $e^{\theta t}$. Then

$$d(e^{\theta t}X_t) = \theta\mu e^{\theta t}\,dt + \sigma e^{\theta t}\,dB_t.$$

Integrating from 0 to t and solving for X_t gives the formula above. □

From this representation, one can compute

$$\mathbb{E}[X_t] = \mu + e^{-\theta t}(x-\mu),$$

and

$$\mathrm{Var}(X_t) = \sigma^2 e^{-2\theta t} \int_0^t e^{2\theta s}\, ds = \frac{\sigma^2}{2\theta}\big(1 - e^{-2\theta t}\big).$$

So the mean converges to μ, and the variance approaches the finite limit $\sigma^2/(2\theta)$.

18.7. A linear SDE

A very common class of equations is the linear SDE

$$dX_t = (aX_t + b)\, dt + (cX_t + d)\, dB_t.$$

These are the stochastic analogues of first-order linear ODEs.

The usual method is to multiply by a suitable integrating factor involving both t and B_t, often of the form

$$e^{\alpha t + \beta B_t}.$$

Then one applies Itô's product rule to simplify the equation.

So for linear SDEs, the standard strategy is:

> Choose an integrating factor, apply Itô's product rule, and then integrate.

18.8. Cox–Ingersoll–Ross process

Another famous example is

$$dX_t = \kappa(\theta - X_t)\, dt + \sigma\sqrt{X_t}\, dB_t.$$

This is called the *Cox–Ingersoll–Ross (CIR) process*. It is used in finance for modeling interest rates and volatility.

Its diffusion coefficient depends on the current state:

$$\sigma(X_t) = \sigma\sqrt{X_t}.$$

So when X_t is close to 0, the random fluctuation becomes smaller.

Unlike the earlier examples, the CIR process is not usually solved in introductory courses by direct explicit integration, but it is a standard model to remember.

18.9. A general diffusion

The most general form commonly studied in a first course is

$$dX_t = b(X_t)\, dt + \sigma(X_t)\, dB_t, \qquad X_0 = x.$$

This is called a *diffusion*. In this general setting:

- explicit solutions are usually not available;
- one studies existence and uniqueness of solutions;
- one computes moments, distributions, or qualitative properties when possible.

18.10. Common methods for solving SDEs

The most common techniques are the following.

1. **Direct integration.** This works when the coefficients are simple, for example

$$dX_t = \mu\, dt + \sigma\, dB_t.$$

2. **Itô's formula.** One transforms the process by choosing a suitable function f and studying $f(X_t)$. This is the standard method for geometric Brownian motion, where one takes $f(x) = \log x$.
3. **Integrating factor.** This is the main method for linear SDEs and Ornstein–Uhlenbeck type equations.
4. **Moment calculations.** Even if the SDE cannot be solved explicitly, one can often compute $\mathbb{E}[X_t]$, $\mathrm{Var}(X_t)$, or derive differential equations for moments.
5. **Numerical approximation.** If no closed form is available, one often uses the Euler–Maruyama scheme.

18.11. Summary

The most common SDEs to know are:

- **Brownian motion:**
$$dX_t = dB_t.$$
- **Brownian motion with drift:**
$$dX_t = \mu\, dt + \sigma\, dB_t.$$
- **Geometric Brownian motion:**
$$dX_t = \mu X_t\, dt + \sigma X_t\, dB_t.$$
- **Exponential martingale:**
$$dM_t = bM_t\, dB_t.$$
- **Ornstein–Uhlenbeck process:**
$$dX_t = \theta(\mu - X_t)\, dt + \sigma\, dB_t.$$
- **Linear SDE:**
$$dX_t = (aX_t + b)\, dt + (cX_t + d)\, dB_t.$$
- **CIR process:**
$$dX_t = \kappa(\theta - X_t)\, dt + \sigma\sqrt{X_t}\, dB_t.$$

The main tools for solving SDEs are:

- Itô's formula,
- integrating factors,
- conditional expectation and moment calculations,
- and, when necessary, numerical methods.