Using the AXI Lite Interface

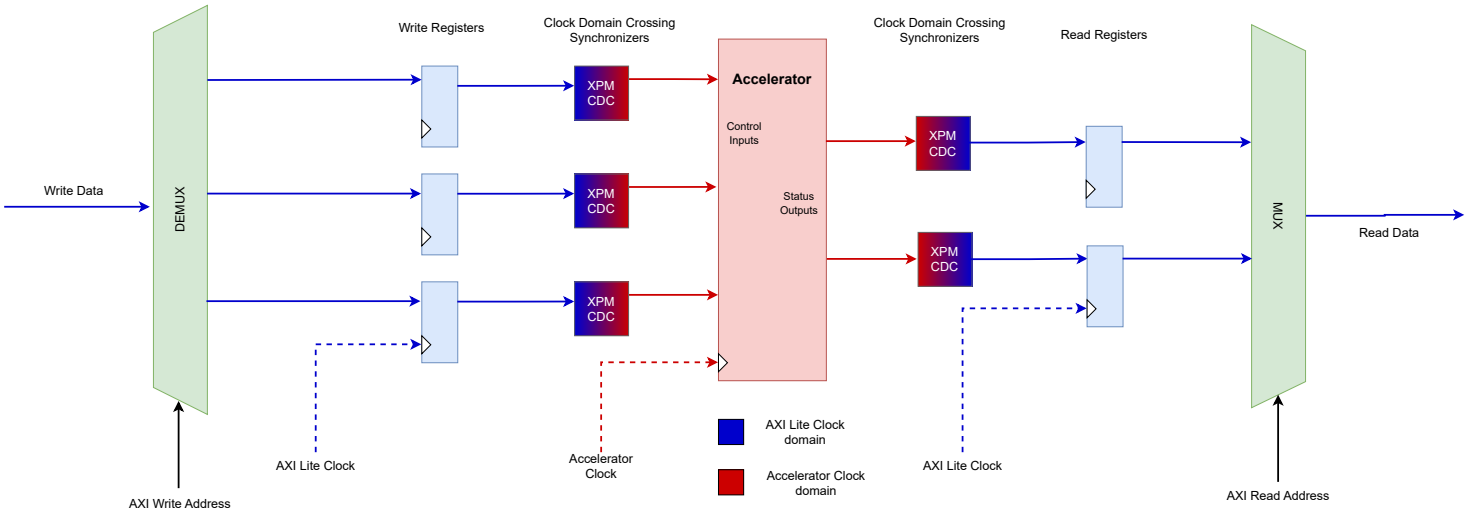
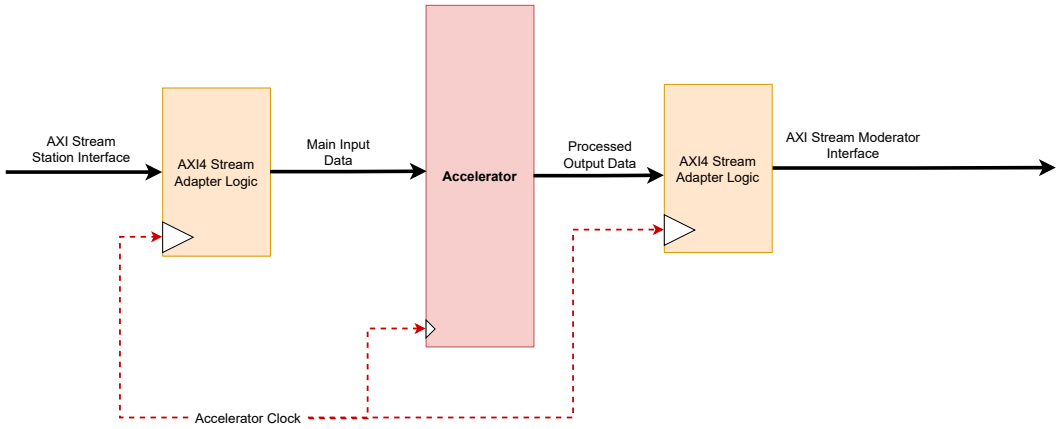
Using the AXI Stream Interface