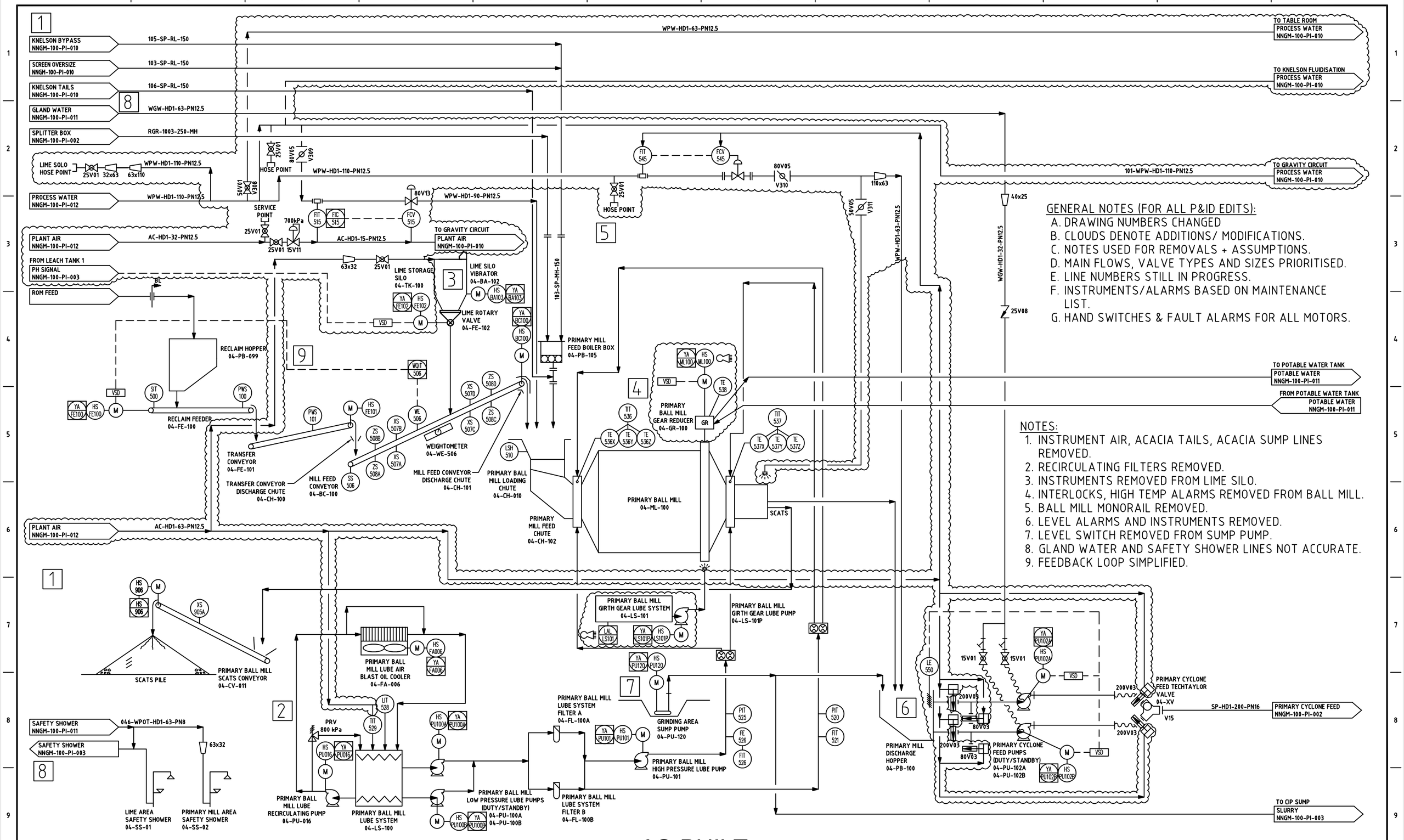

GENERAL NOTES (FOR ALL P&ID EDITS):

A. DRAWING NUMBERS CHANGED
B. CLOUDS DENOTE ADDITIONS/ MODIFICATIONS.
C. NOTES USED FOR REMOVALS + ASSUMPTIONS.
D. MAIN FLOWS, VALVE TYPES AND SIZES PRIORITISED.
E. LINE NUMBERS STILL IN PROGRESS.
F. INSTRUMENTS/ALARMS BASED ON MAINTENANCE LIST.
G. HAND SWITCHES & FAULT ALARMS FOR ALL MOTORS.

NOTES:

1. INSTRUMENT AIR, ACACIA TAILS, ACACIA SUMP LINES REMOVED.
2. RECIRCULATING FILTERS REMOVED.
3. INSTRUMENTS REMOVED FROM LIME SILO.
4. INTERLOCKS, HIGH TEMP ALARMS REMOVED FROM BALL MILL.
5. BALL MILL MONORAIL REMOVED.
6. LEVEL ALARMS AND INSTRUMENTS REMOVED.
7. LEVEL SWITCH REMOVED FROM SUMP PUMP.
8. GLAND WATER AND SAFETY SHOWER LINES NOT ACCURATE.
9. FEEDBACK LOOP SIMPLIFIED.

AS-BUILT

DRG No.	REFERENCES	REV	DATE	DESCRIPTION	DRAW	CHECK	DESIGN	TECH APP	PROJ APP

ASPECT

THIS DRAWING IS THE PROPERTY OF ASPECT ENGINEERING SOLUTIONS PTY LTD AND IS PRIVATE, CONFIDENTIAL AND IS SUPPLIED ON THE EXPRESS UNDERSTANDING THAT IT IS NOT TO BE USED FOR ANY PURPOSE OR COPIED OR COMMUNICATED TO ANY OTHER PERSON WITHOUT THE WRITTEN PERMISSION OF THE PROPRIETORS.

TENNANT MINING

PROJECT: TENNANT MINING PTY LTD
NOBLES NOB GOLD MINE

TITLE: MILLING
PIPING AND INSTRUMENTATION DIAGRAM

SHEET	SCALE	DRG No.	REVISION
A1	NTS	NNGM-100-PI-001	0

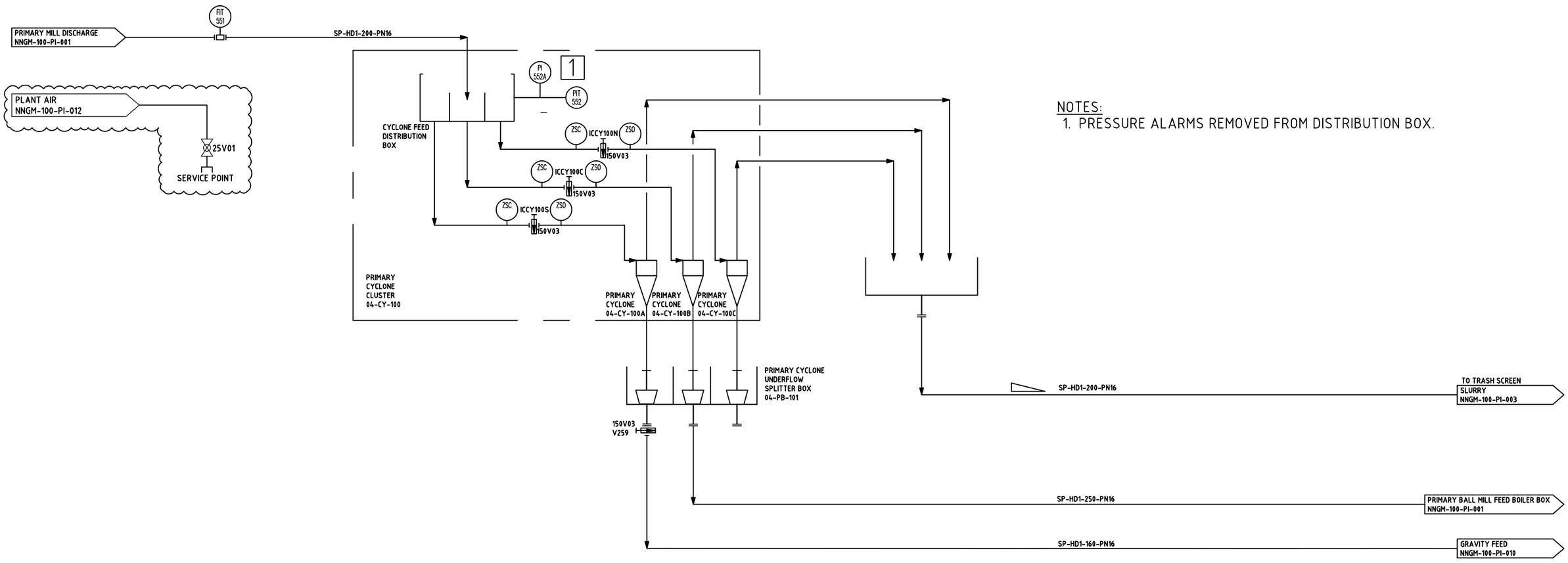

NOTES:
1. PRESSURE ALARMS REMOVED FROM DISTRIBUTION BOX.

AS-BUILT

DRG No.	REFERENCES	REV	DATE	DESCRIPTION	DRAW	CHECK	DESIGN	TECH APP	PROJ APP

ASPECT

THIS DRAWING IS THE PROPERTY OF ASPECT ENGINEERING SOLUTIONS PTY LTD AND IS PRIVATE, CONFIDENTIAL AND IS SUPPLIED ON THE EXPRESS UNDERSTANDING THAT IT IS NOT TO BE USED FOR ANY PURPOSE OR COPIED OR COMMUNICATED TO ANY OTHER PERSON WITHOUT THE WRITTEN PERMISSION OF THE PROPRIETORS.

TENNANT MINING

PROJECT: TENNANT MINING PTY LTD
NOBLES NOB GOLD MINE

TITLE: CLASSIFICATION
PIPING AND INSTRUMENTATION DIAGRAM

SHEET	SCALE	DRG No.	REVISION
A1	NTS	NNGM-100-PI-002	0

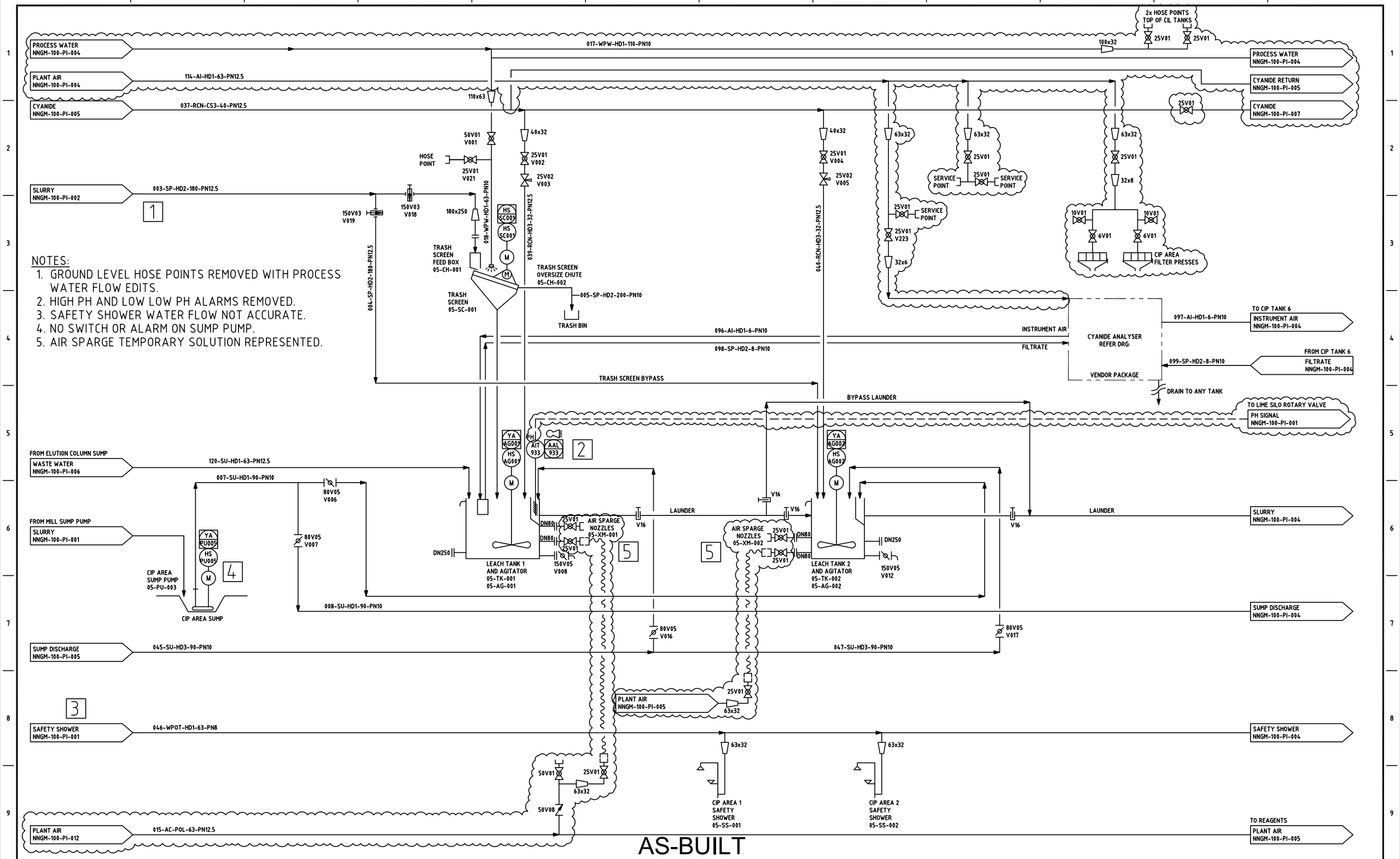

AS-BUILT

DRG No.	REFERENCES	REV	DATE	DESCRIPTION	DRAW	CHECK	DESIGN	TECH APP	PROJ APP

ASPECT

THIS DRAWING IS THE PROPERTY OF ASPECT ENGINEERING SOLUTIONS PTY LTD AND IS PRIVATE, CONFIDENTIAL AND IS SUPPLIED ON THE EXPRESS UNDERSTANDING THAT IT IS NOT TO BE USED FOR ANY PURPOSE OR COPIED OR COMMUNICATED TO ANY OTHER PERSON WITHOUT THE WRITTEN PERMISSION OF THE PROPRIETORS.

TENNANT MINING

PROJECT: TENNANT MINING PTY LTD
NOBLES NOB GOLD MINE

TITLE: LEACHING
PIPING AND INSTRUMENTATION DIAGRAM

SHEET	SCALE	DRG No.	REVISION
A1	NTS	NNGM-100-PI-003	0

NOTES;

1. ACTUATORS ON TAILINGS PUMP TO BE ADDED.
2. PLANT AIR SPARGE ON ADS TANKS REMOVED.
3. CYANIDE LINE REMOVED.
4. TANK LEVEL HOSE POINTS MOVED.
5. INSTRUMENTS AND ALARMS REMOVED FROM HOPPER.
6. GLAND WATER AND SAFETY SHOWER LINES STILL NOT ACCURATE.

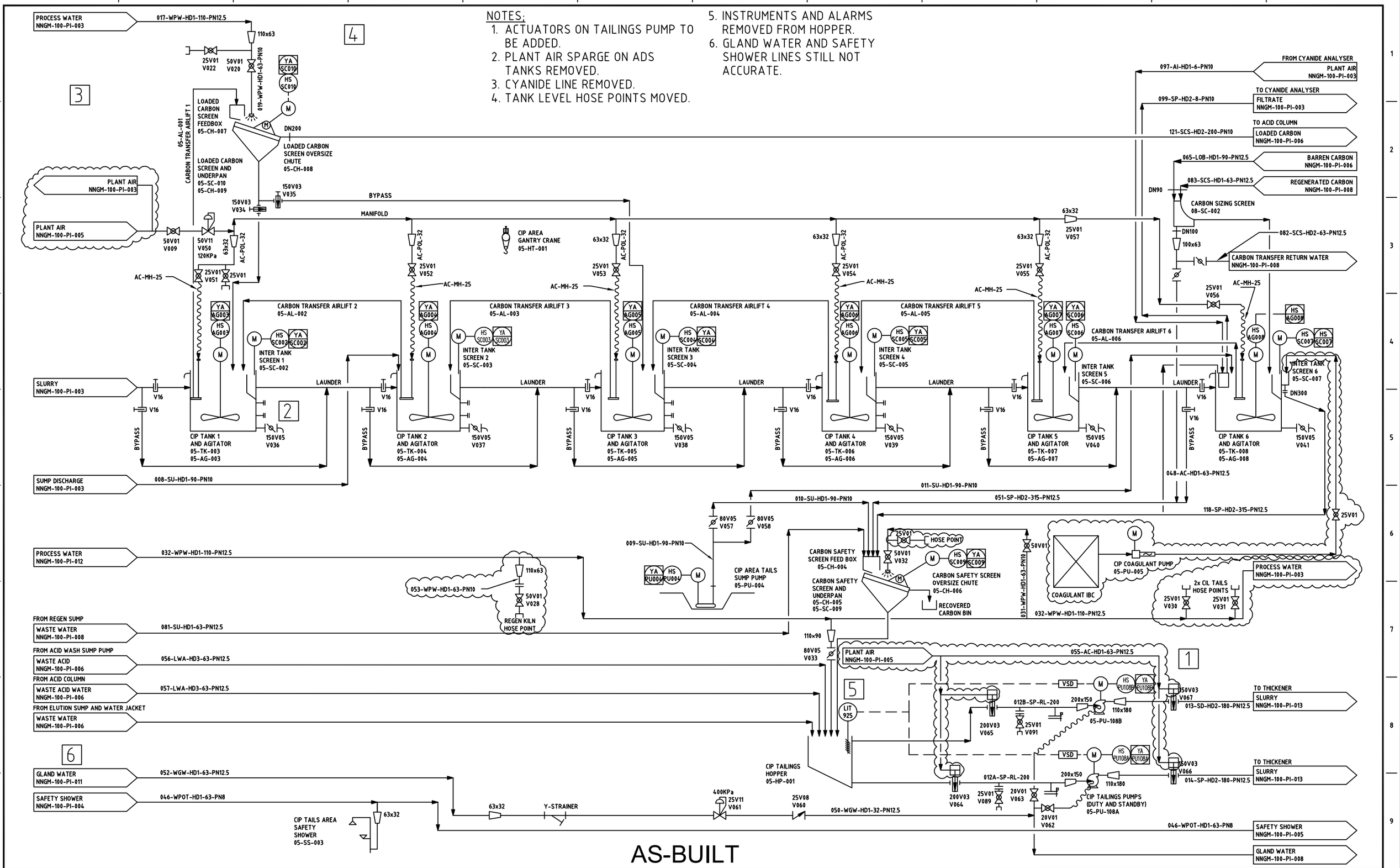

AS-BUILT

DRG No.	REFERENCES	REV	DATE	DESCRIPTION	DRAW	CHECK	DESIGN	TECH APP	PROJ APP

ASPECT

THIS DRAWING IS THE PROPERTY OF ASPECT ENGINEERING SOLUTIONS PTY LTD AND IS PRIVATE, CONFIDENTIAL AND IS SUPPLIED ON THE EXPRESS UNDERSTANDING THAT IT IS NOT TO BE USED FOR ANY PURPOSE OR COPIED OR COMMUNICATED TO ANY OTHER PERSON WITHOUT THE WRITTEN PERMISSION OF THE PROPRIETORS.

TENNANT MINING

PROJECT: TENNANT MINING PTY LTD
NOBLES NOB GOLD MINE

TITLE: ADSORPTION
PIPING AND INSTRUMENTATION DIAGRAM

SHEET	SCALE	DRG No.	REVISION
A1	NTS	NNGM-100-PI-004	0

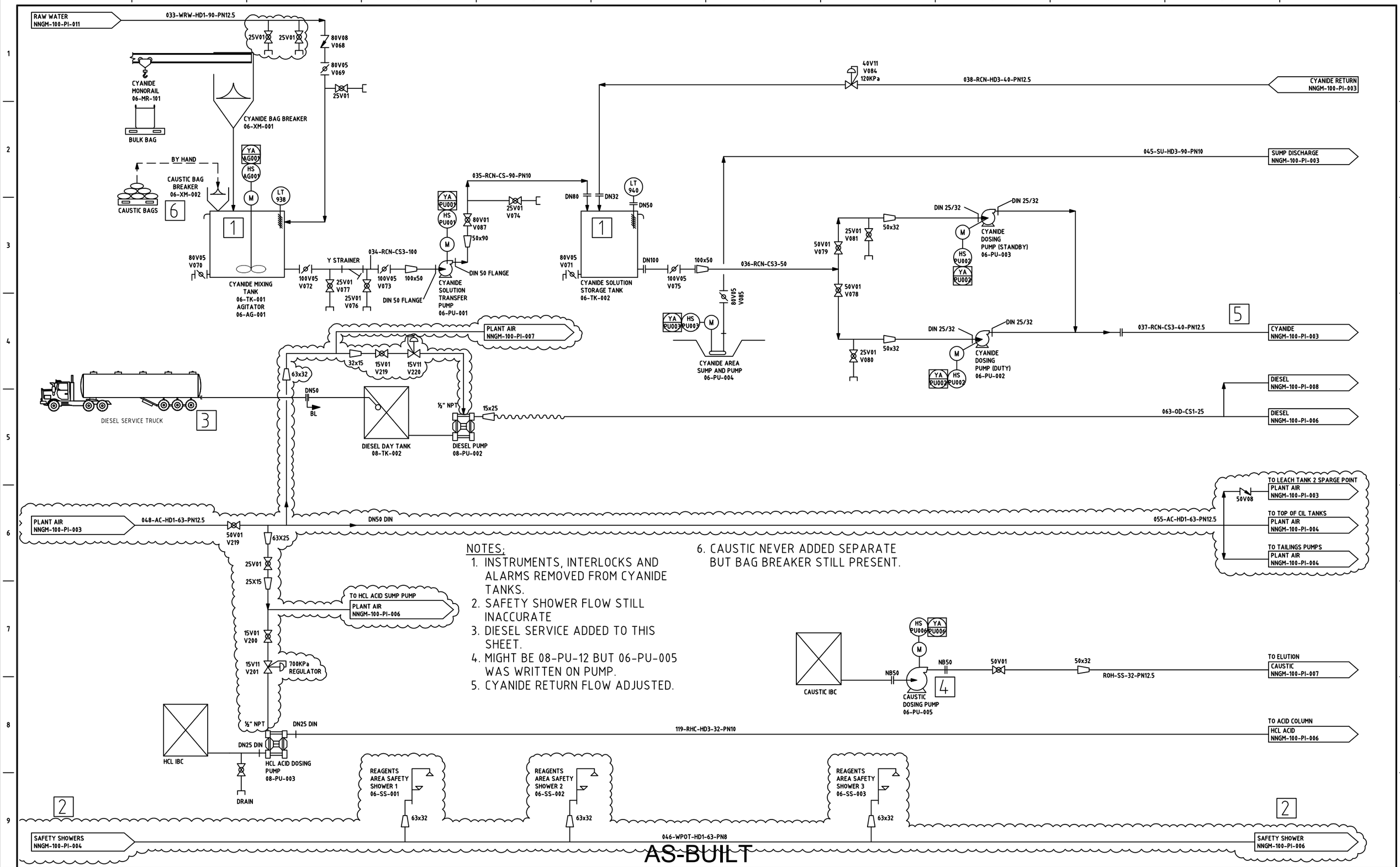

NOTES:

1. INSTRUMENTS, INTERLOCKS AND ALARMS REMOVED FROM CYANIDE TANKS.
2. SAFETY SHOWER FLOW STILL INACCURATE
3. DIESEL SERVICE ADDED TO THIS SHEET.
4. MIGHT BE 08-PU-12 BUT 06-PU-005 WAS WRITTEN ON PUMP.
5. CYANIDE RETURN FLOW ADJUSTED.
6. CAUSTIC NEVER ADDED SEPARATE BUT BAG BREAKER STILL PRESENT.

AS-BUILT

DRG No.	REFERENCES	REV	DATE	DESCRIPTION	DRAW	CHECK	DESIGN	TECH APP	PROJ APP

ASPECT

THIS DRAWING IS THE PROPERTY OF ASPECT ENGINEERING SOLUTIONS PTY LTD AND IS PRIVATE, CONFIDENTIAL AND IS SUPPLIED ON THE EXPRESS UNDERSTANDING THAT IT IS NOT TO BE USED FOR ANY PURPOSE OR COPIED OR COMMUNICATED TO ANY OTHER PERSON WITHOUT THE WRITTEN PERMISSION OF THE PROPRIETORS.

TENNANT MINING

PROJECT: TENNANT MINING PTY LTD
NOBLES NOB GOLD MINE

TITLE: REAGENTS
PIPING AND INSTRUMENTATION DIAGRAM

SHEET	SCALE	DRG No.	REVISION
A1	NTS	NNGM-100-PI-005	0

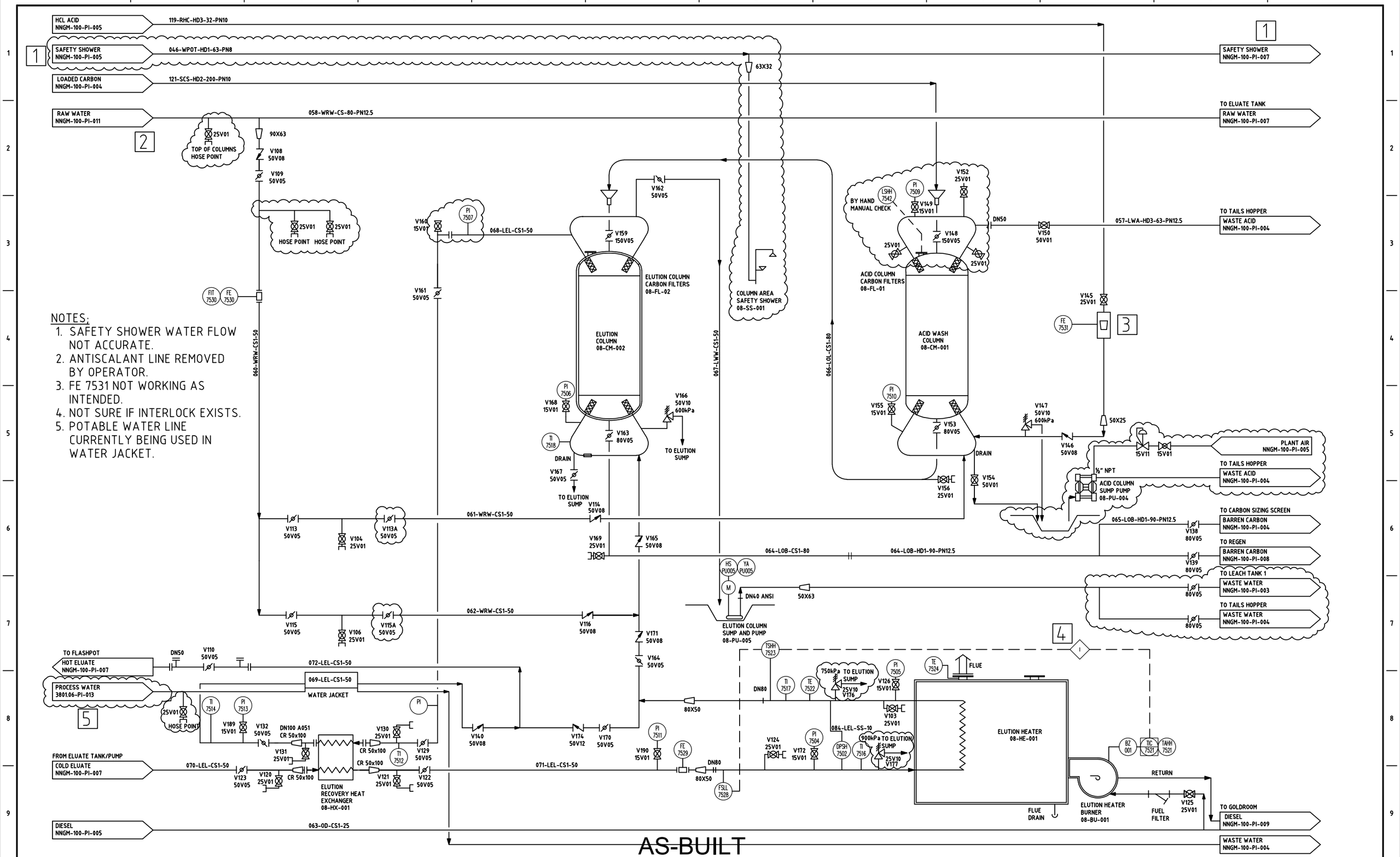

NOTES;

1. SAFETY SHOWER WATER FLOW NOT ACCURATE.
2. ANTISCALANT LINE REMOVED BY OPERATOR.
3. FE 7531 NOT WORKING AS INTENDED.
4. NOT SURE IF INTERLOCK EXISTS.
5. POTABLE WATER LINE CURRENTLY BEING USED IN WATER JACKET.

DRG No.	REFERENCES	REV	DATE	DESCRIPTION	DRAW	CHECK	DESIGN	TECH APP	PROJ APP

ASPECT

THIS DRAWING IS THE PROPERTY OF ASPECT ENGINEERING SOLUTIONS PTY LTD AND IS PRIVATE, CONFIDENTIAL AND IS SUPPLIED ON THE EXPRESS UNDERSTANDING THAT IT IS NOT TO BE USED FOR ANY PURPOSE OR COPIED OR COMMUNICATED TO ANY OTHER PERSON WITHOUT THE WRITTEN PERMISSION OF THE PROPRIETORS.

TENNANT MINING

PROJECT: TENNANT MINING PTY LTD
NOBLES NOB GOLD MINE

TITLE: ELUTION
PIPING AND INSTRUMENTATION DIAGRAM

SHEET	SCALE	DRG No.	REVISION
A1	NTS	NNGM-100-PI-006	0

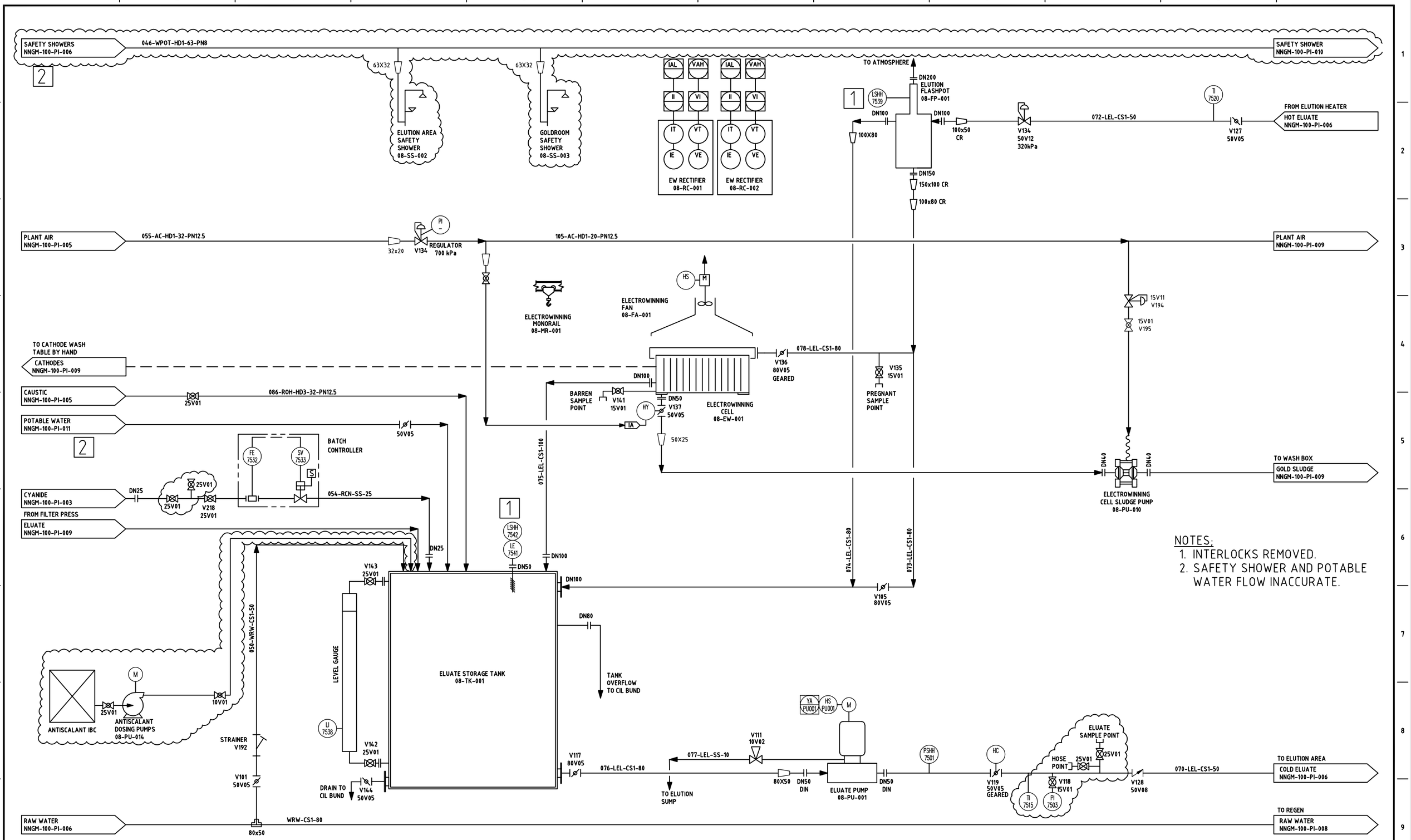

NOTES;
1. INTERLOCKS REMOVED.
2. SAFETY SHOWER AND POTABLE WATER FLOW INACCURATE.

AS-BUILT

DRG No.	REFERENCES	REV	DATE	DESCRIPTION	DRAW	CHECK	DESIGN	TECH APP	PROJ APP

ASPECT

THIS DRAWING IS THE PROPERTY OF ASPECT ENGINEERING SOLUTIONS PTY LTD AND IS PRIVATE, CONFIDENTIAL AND IS SUPPLIED ON THE EXPRESS UNDERSTANDING THAT IT IS NOT TO BE USED FOR ANY PURPOSE OR COPIED OR COMMUNICATED TO ANY OTHER PERSON WITHOUT THE WRITTEN PERMISSION OF THE PROPRIETORS.

TENNANT MINING

PROJECT: TENNANT MINING PTY LTD
NOBLES NOB GOLD MINE

TITLE: ELECTROWINNING
PIPING AND INSTRUMENTATION DIAGRAM

SHEET	SCALE	DRG No.	REVISION
A1	NTS	NNGM-100-PI-007	0

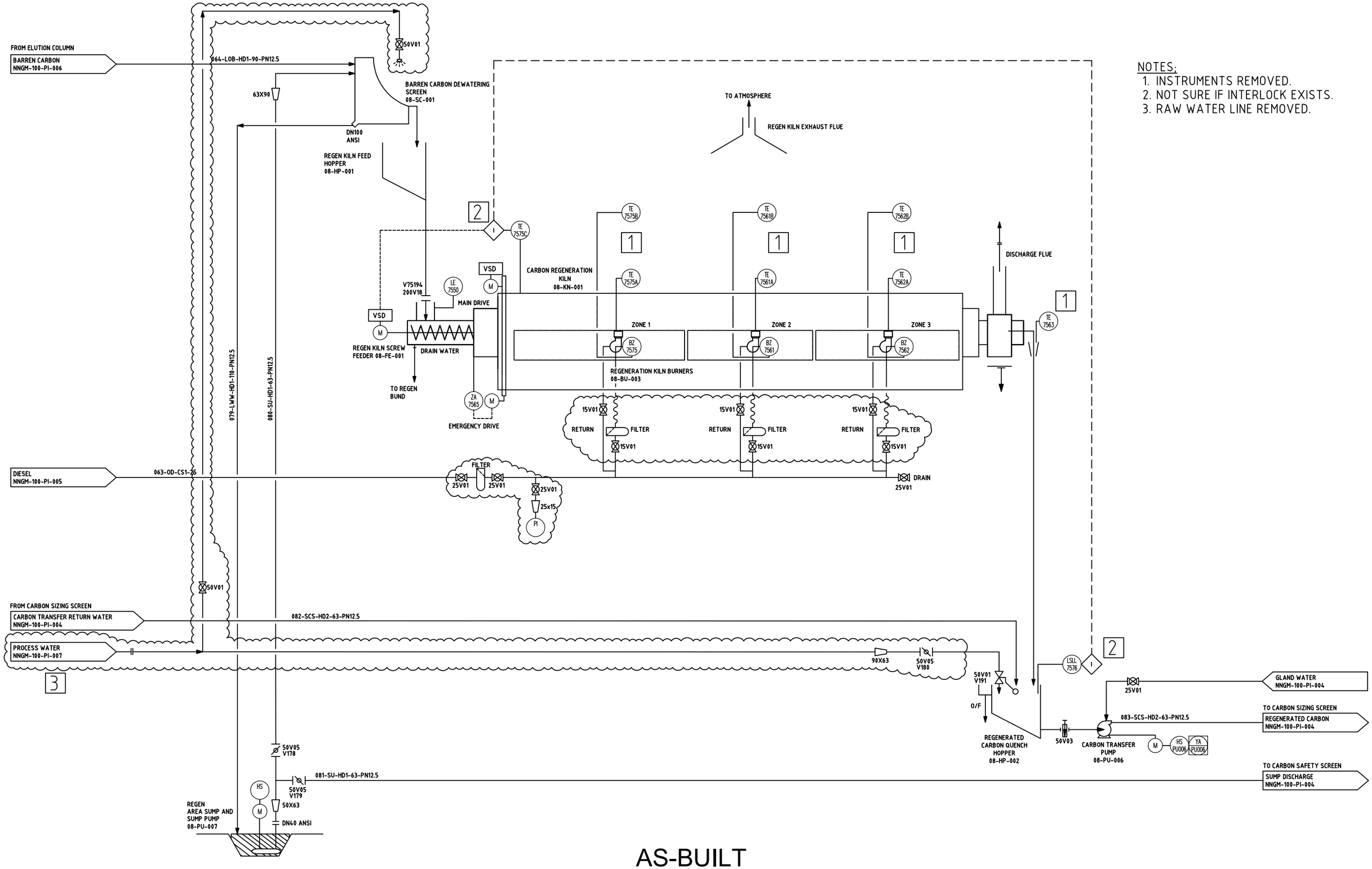

NOTES:
1. INSTRUMENTS REMOVED.
2. NOT SURE IF INTERLOCK EXISTS.
3. RAW WATER LINE REMOVED.

AS-BUILT

DRG No.	REFERENCES	REV	DATE	DESCRIPTION	DRAW	CHECK	DESIGN	TECH APP	PROJ APP

ASPECT

THIS DRAWING IS THE PROPERTY OF ASPECT ENGINEERING SOLUTIONS PTY LTD AND IS PRIVATE, CONFIDENTIAL AND IS SUPPLIED ON THE EXPRESS UNDERSTANDING THAT IT IS NOT TO BE USED FOR ANY PURPOSE OR COPIED OR COMMUNICATED TO ANY OTHER PERSON WITHOUT THE WRITTEN PERMISSION OF THE PROPRIETORS.

TENNANT MINING

PROJECT: TENNANT MINING PTY LTD
NOBLES NOB GOLD MINE

TITLE: CARBON REGENERATION
PIPING AND INSTRUMENTATION DIAGRAM

SHEET	SCALE	DRG No.	REVISION
A1	NTS	NNGM-100-PI-008	0

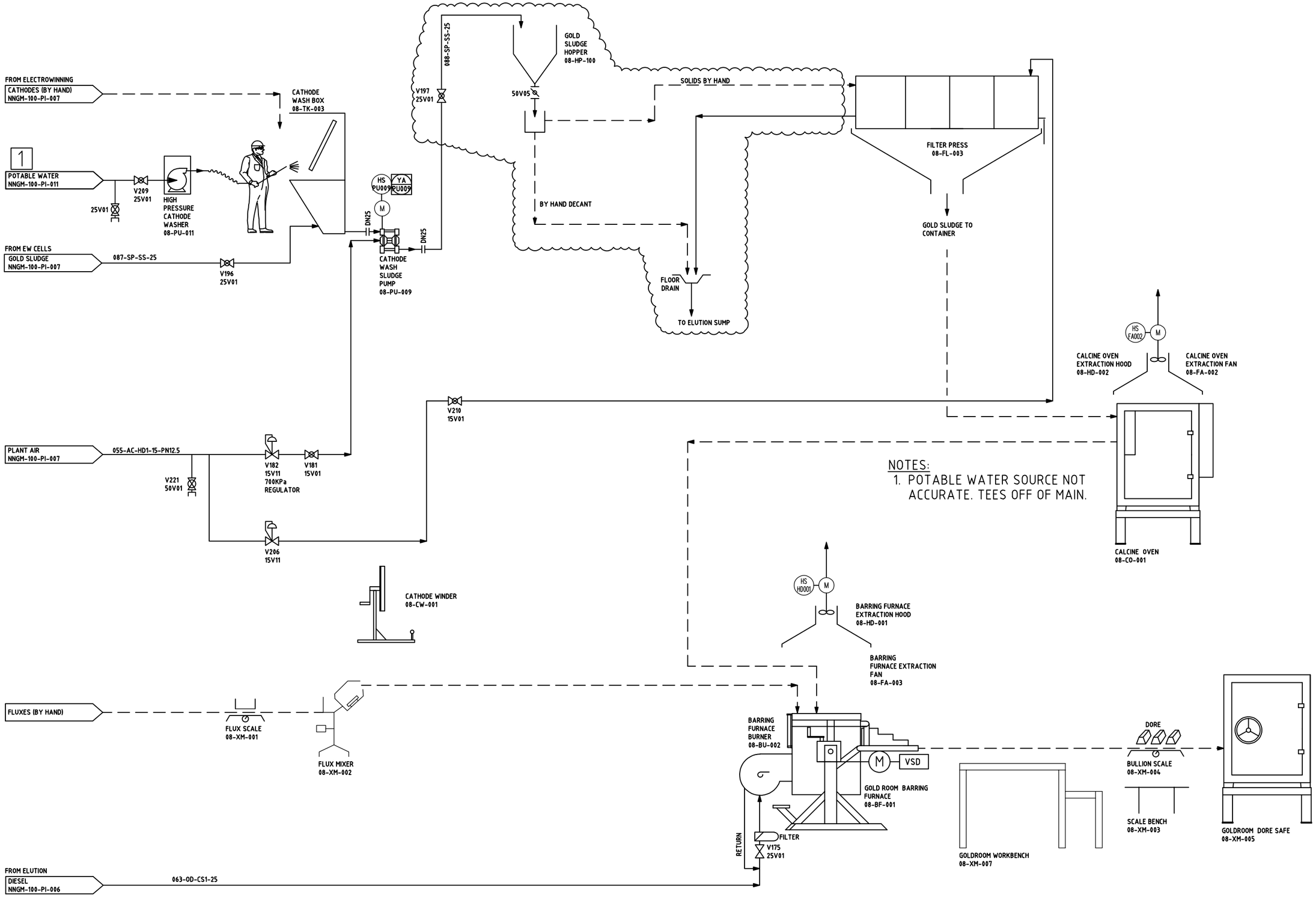

NOTES:
1. POTABLE WATER SOURCE NOT ACCURATE. TEES OFF OF MAIN.

AS-BUILT

DRG No.	REFERENCES	REV	DATE	DESCRIPTION	DRAW	CHECK	DESIGN	TECH APP	PROJ APP

ASPECT

THIS DRAWING IS THE PROPERTY OF ASPECT ENGINEERING SOLUTIONS PTY LTD AND IS PRIVATE, CONFIDENTIAL AND IS SUPPLIED ON THE EXPRESS UNDERSTANDING THAT IT IS NOT TO BE USED FOR ANY PURPOSE OR COPIED OR COMMUNICATED TO ANY OTHER PERSON WITHOUT THE WRITTEN PERMISSION OF THE PROPRIETORS.

TENNANT MINING

PROJECT: TENNANT MINING PTY LTD
NOBLES NOB GOLD MINE

TITLE: GOLDROOM
PIPING AND INSTRUMENTATION DIAGRAM

SHEET	SCALE	DRG No.	REVISION
A1	NTS	NNGM-100-PI-009	0

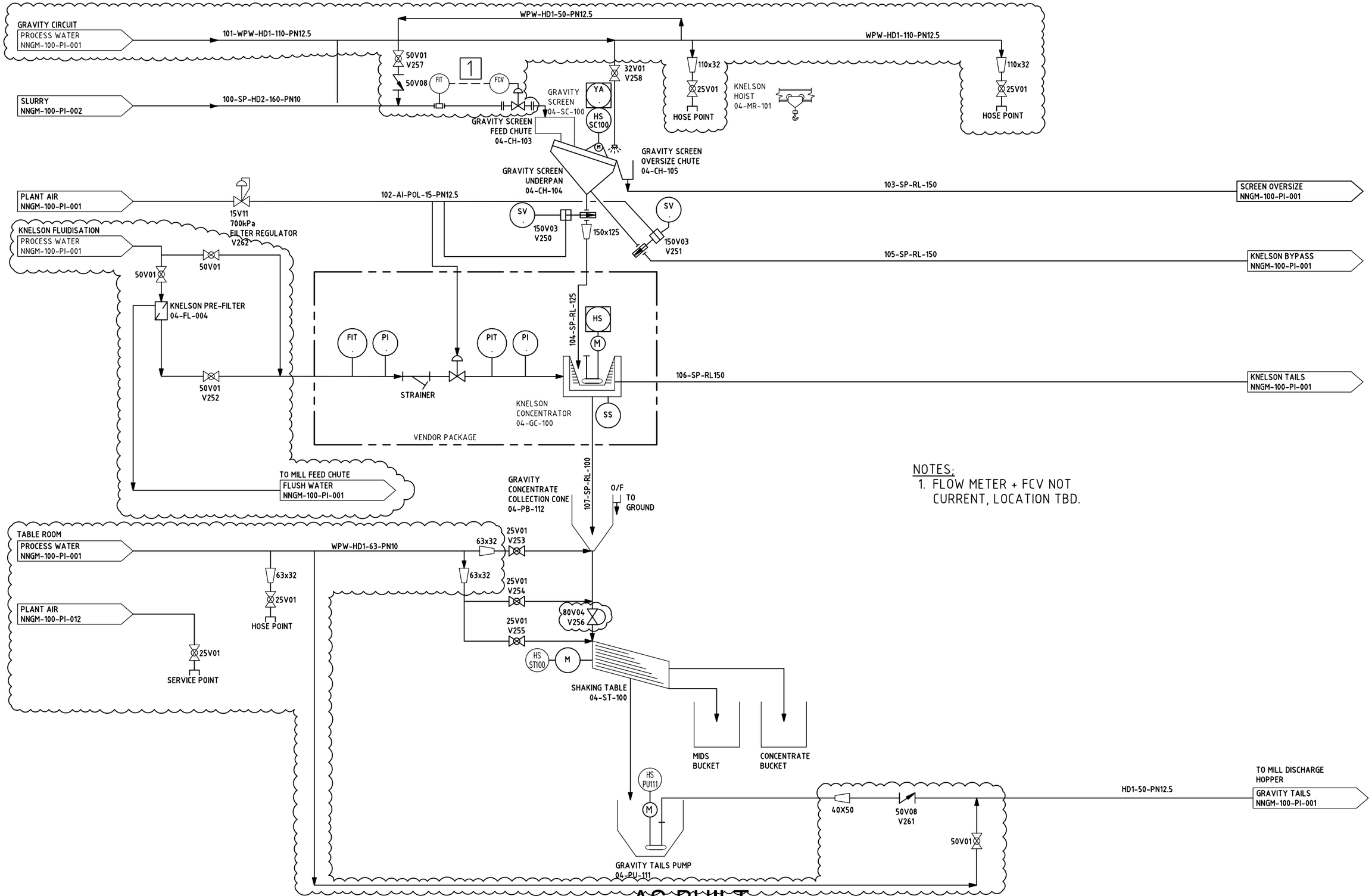

NOTES;

1. FLOW METER + FCV NOT CURRENT, LOCATION TBD.

AS-BUILT

DRG No.	REFERENCES	REV	DATE	DESCRIPTION	DRAW	CHECK	DESIGN	TECH APP	PROJ APP

ASPECT

THIS DRAWING IS THE PROPERTY OF ASPECT ENGINEERING SOLUTIONS PTY LTD AND IS PRIVATE, CONFIDENTIAL AND IS SUPPLIED ON THE EXPRESS UNDERSTANDING THAT IT IS NOT TO BE USED FOR ANY PURPOSE OR COPIED OR COMMUNICATED TO ANY OTHER PERSON WITHOUT THE WRITTEN PERMISSION OF THE PROPRIETORS.

TENNANT MINING

PROJECT: TENNANT MINING PTY LTD
NOBLES NOB GOLD MINE

TITLE: GRAVITY
PIPING AND INSTRUMENTATION DIAGRAM

SHEET	SCALE	DRG No.	REVISION
A1	NTS	NNGM-100-PI-010	0

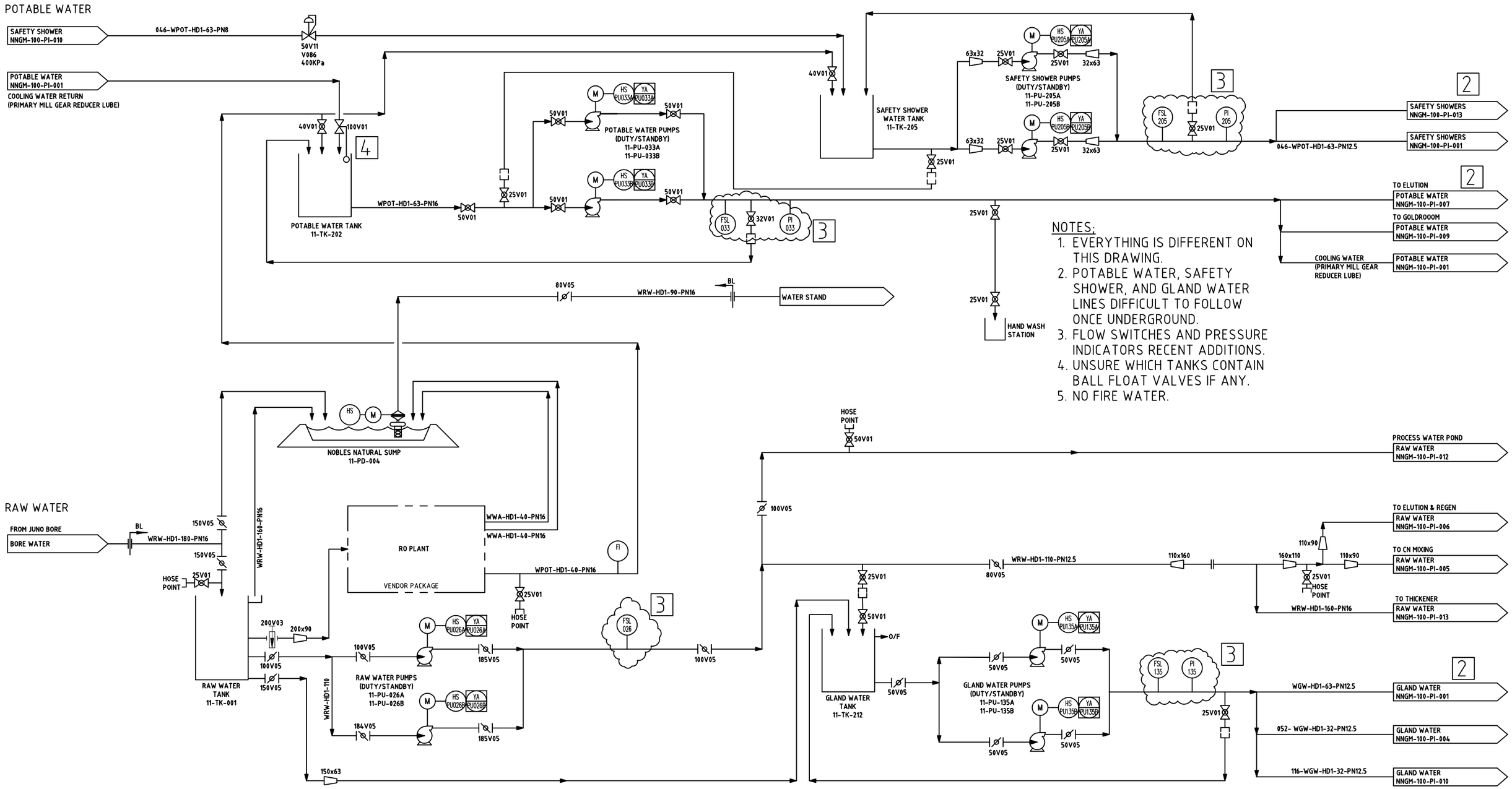

AS-BUILT

DRG No.	REFERENCES	REV	DATE	DESCRIPTION	DRAW	CHECK	DESIGN	TECH APP	PROJ APP

ASPECT

THIS DRAWING IS THE PROPERTY OF ASPECT ENGINEERING SOLUTIONS PTY LTD AND IS PRIVATE, CONFIDENTIAL AND IS SUPPLIED ON THE EXPRESS UNDERSTANDING THAT IT IS NOT TO BE USED FOR ANY PURPOSE OR COPIED OR COMMUNICATED TO ANY OTHER PERSON WITHOUT THE WRITTEN PERMISSION OF THE PROPRIETORS.

TENNANT MINING

PROJECT: TENNANT MINING PTY LTD
NOBLES NOB GOLD MINE

TITLE: RAW WATER SERVICES
PIPING AND INSTRUMENTATION DIAGRAM

SHEET	SCALE	DRG No.	REVISION
A1	NTS	NNGM-100-PI-011	0

NOTES;
1. ANTISCALANT DOSING NOT CURRENTLY IN USE.
2. ALL AIR IS JUST PLANT AIR AND THERE ISN'T A SEPARATE AIR DRYER.
3. ALARMS ON AIR RECEIVERS REMOVED.
4. PROCESS WATER FLOW AND PRESSURE INSTRUMENTS + ALARMS NOT PRESENT.

PROCESS WATER

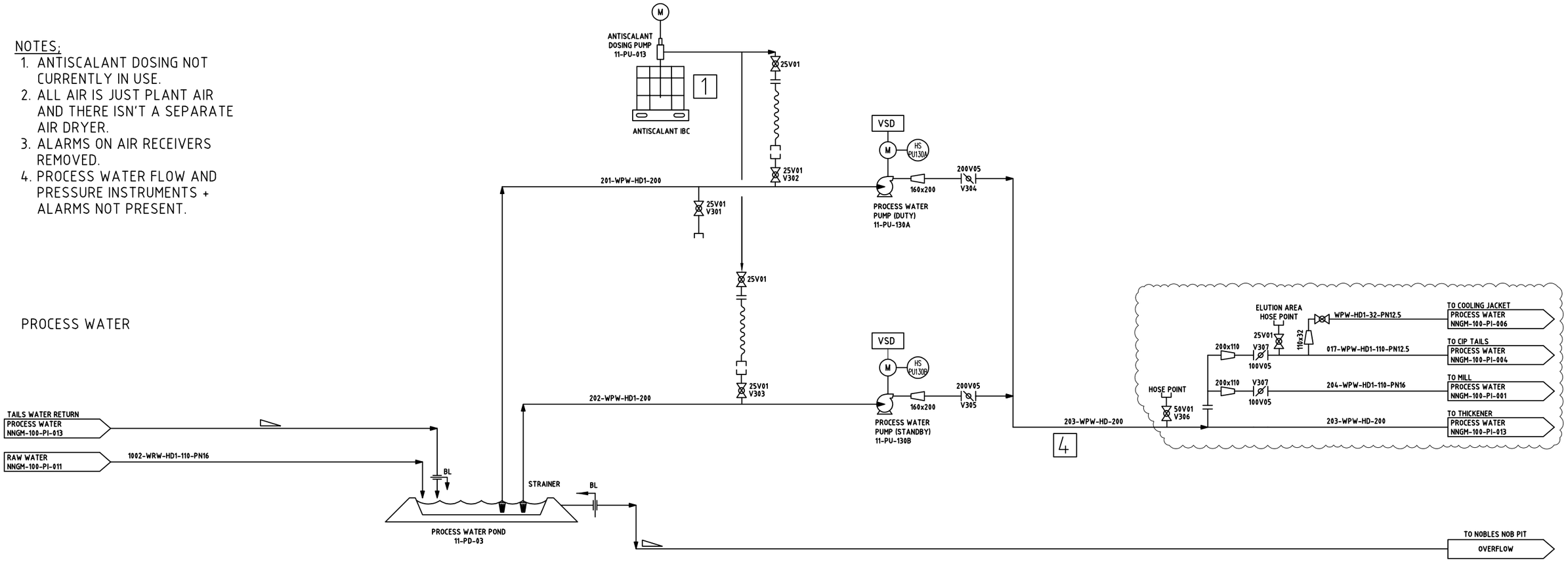

PLANT AIR

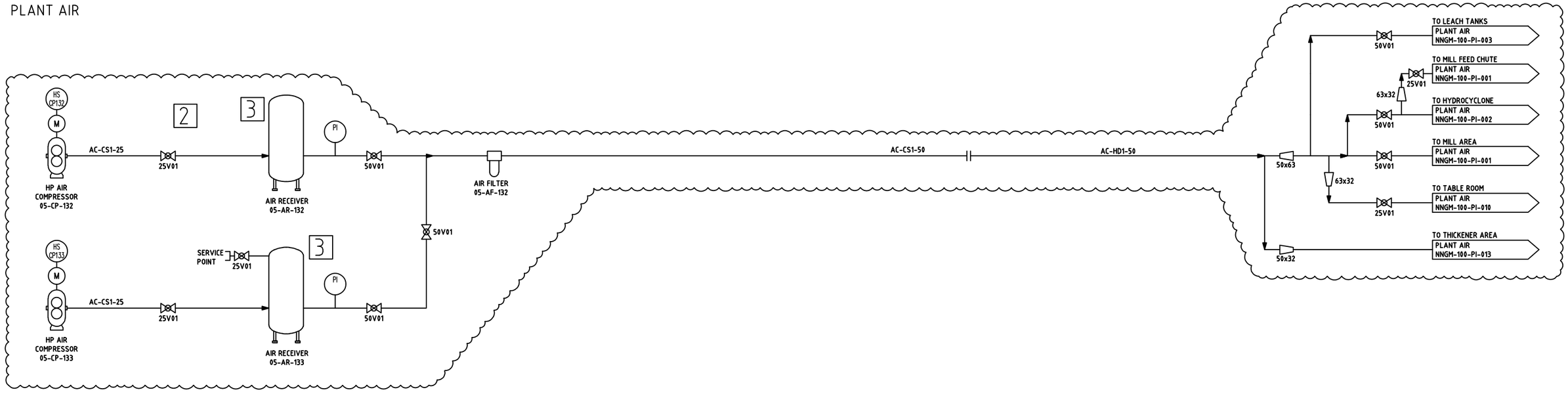

AS-BUILT

DRG No.	REFERENCES	REV	DATE	DESCRIPTION	DRAW	CHECK	DESIGN	TECH APP	PROJ APP

ASPECT

THIS DRAWING IS THE PROPERTY OF ASPECT ENGINEERING SOLUTIONS PTY LTD AND IS PRIVATE, CONFIDENTIAL AND IS SUPPLIED ON THE EXPRESS UNDERSTANDING THAT IT IS NOT TO BE USED FOR ANY PURPOSE OR COPIED OR COMMUNICATED TO ANY OTHER PERSON WITHOUT THE WRITTEN PERMISSION OF THE PROPRIETORS.

TENNANT MINING

PROJECT: TENNANT MINING PTY LTD
NOBLES NOB GOLD MINE

TITLE: PROCESS WATER AND AIR SERVICES PIPING AND INSTRUMENTATION DIAGRAM

SHEET	SCALE	DRG No.	REVISION
A1	NTS	NNGM-100-PI-012	0

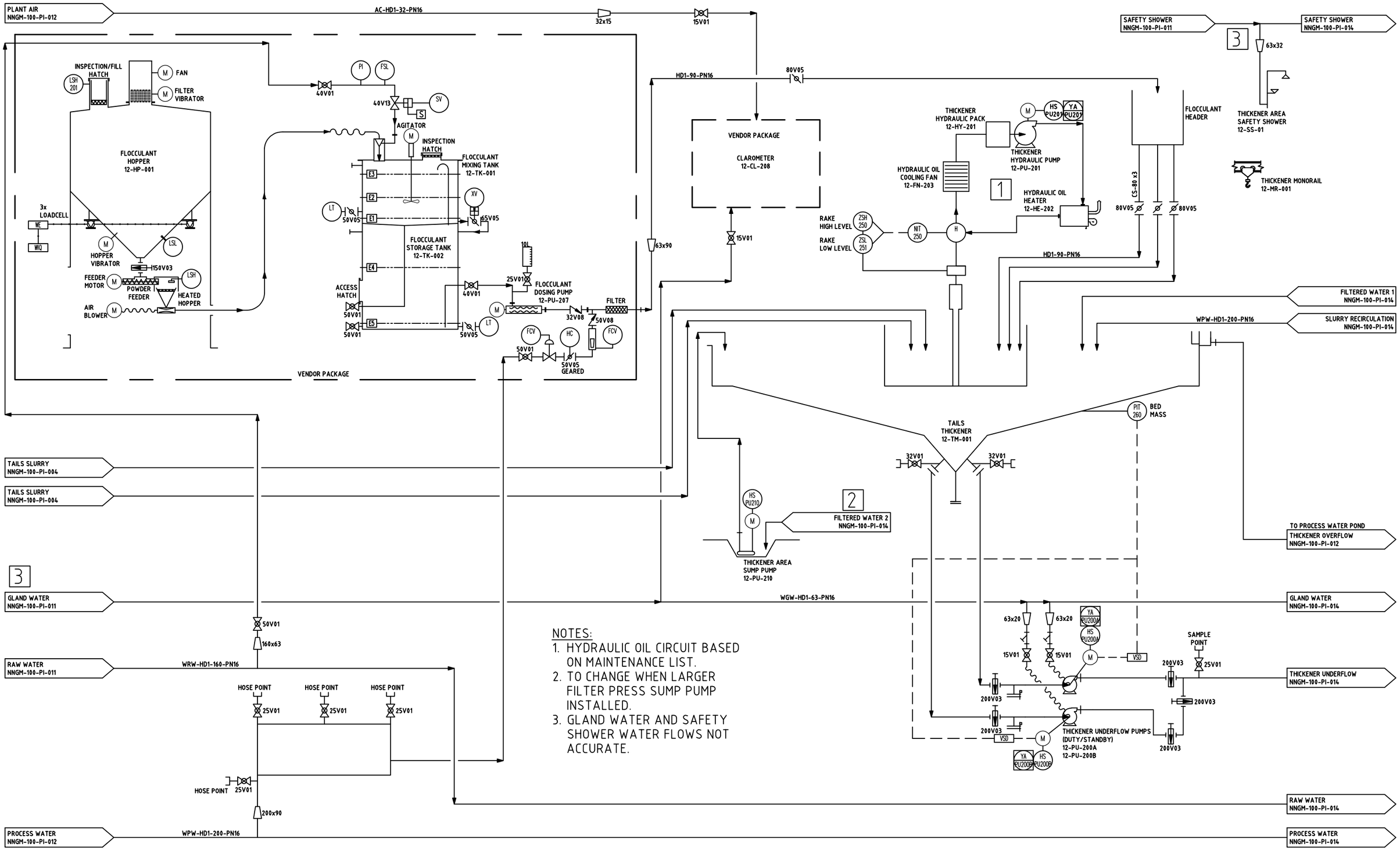

NOTES:
1. HYDRAULIC OIL CIRCUIT BASED ON MAINTENANCE LIST.
2. TO CHANGE WHEN LARGER FILTER PRESS SUMP PUMP INSTALLED.
3. GLAND WATER AND SAFETY SHOWER WATER FLOWS NOT ACCURATE.

AS-BUILT

DRG No.	REFERENCES	REV	DATE	DESCRIPTION	DRAW	CHECK	DESIGN	TECH APP	PROJ APP

ASPECT

THIS DRAWING IS THE PROPERTY OF ASPECT ENGINEERING SOLUTIONS PTY LTD AND IS PRIVATE, CONFIDENTIAL, AND IS SUPPLIED ON THE EXPRESS UNDERSTANDING THAT IT IS NOT TO BE USED FOR ANY PURPOSE OR COPIED OR COMMUNICATED TO ANY OTHER PERSON WITHOUT THE WRITTEN PERMISSION OF THE PROPRIETORS.

TENNANT MINING

PROJECT: TENNANT MINING PTY LTD
NOBLES NOB GOLD MINE

TITLE: THICKENER
PIPING AND INSTRUMENTATION DIAGRAM

SHEET	SCALE	DRG No.	REVISION
A1	NTS	NNGM-100-PI-013	0

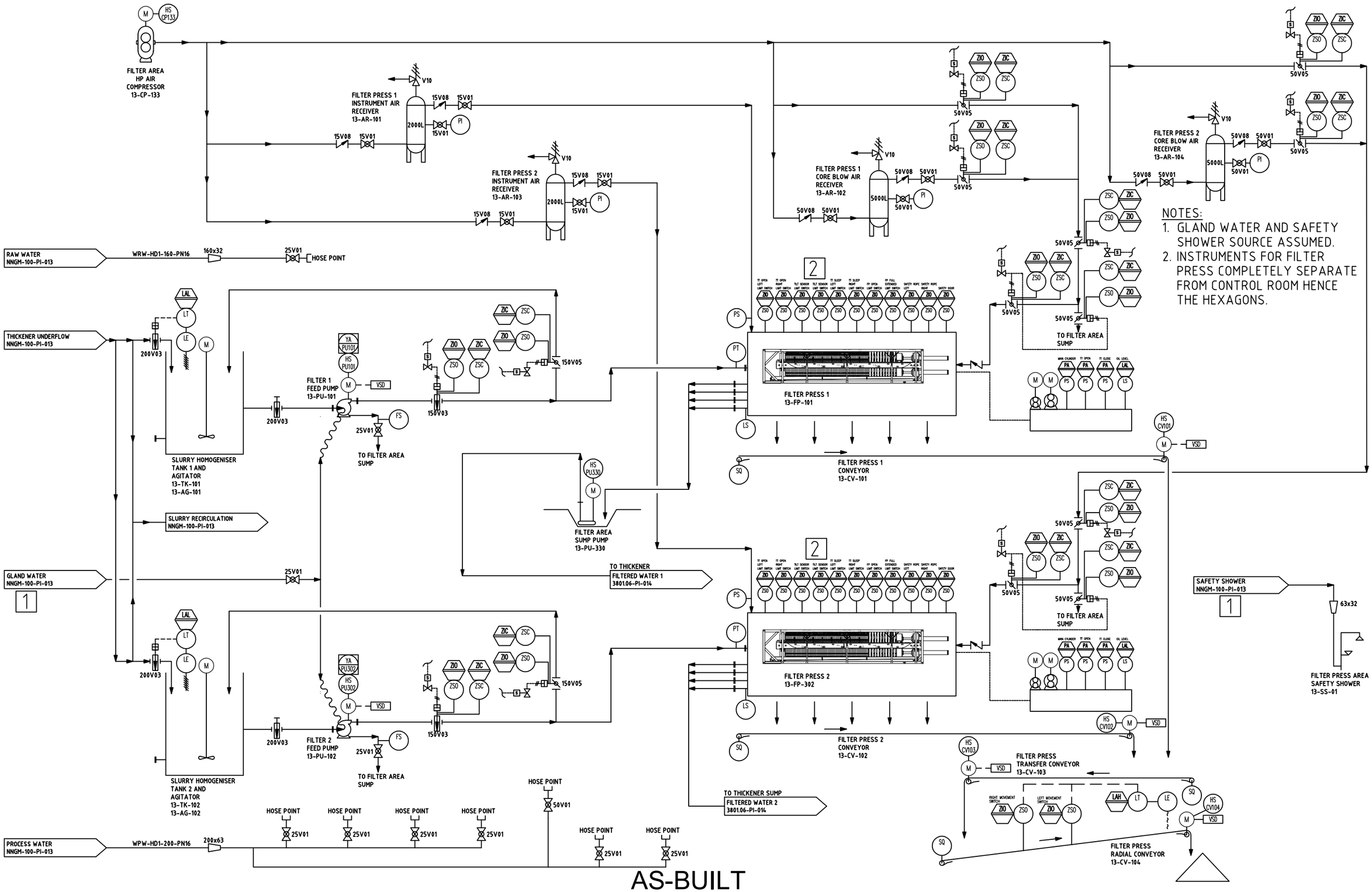

NOTES:
1. GLAND WATER AND SAFETY SHOWER SOURCE ASSUMED.
2. INSTRUMENTS FOR FILTER PRESS COMPLETELY SEPARATE FROM CONTROL ROOM HENCE THE HEXAGONS.

AS-BUILT

DRG No.	REFERENCES	REV	DATE	DESCRIPTION	DRAW	CHECK	DESIGN	TECH APP	PROJ APP

ASPECT

THIS DRAWING IS THE PROPERTY OF ASPECT ENGINEERING SOLUTIONS PTY LTD AND IS PRIVATE, CONFIDENTIAL AND IS SUPPLIED ON THE EXPRESS UNDERSTANDING THAT IT IS NOT TO BE USED FOR ANY PURPOSE OR COPIED OR COMMUNICATED TO ANY OTHER PERSON WITHOUT THE WRITTEN PERMISSION OF THE PROPRIETORS.

TENNANT MINING

PROJECT: TENNANT MINING PTY LTD
NOBLES NOB GOLD MINE

TITLE: FILTER PRESS
PIPING AND INSTRUMENTATION DIAGRAM

SHEET	SCALE	DRG No.	REVISION
A1	NTS	NNGM-100-PI-014	0