An Accurate Dynamic Power Model on FPGA Routing Resources

Xifan Tang[1]*, Lingli Wang[1], Hu Xu[2]
[1]State Key Laboratory of ASIC & System, Fudan University 201203, Shanghai
[2]Laboratory of Integrated System, EPFL, Lausanne, Switzerland
*Email: tangxifan@alu.fudan.edu

Abstract

Accurately modeling the dynamic power of FPGAs is a challenging task due to the changeable functionality and a large number of pass transistors. These two terms cannot be accurately described by the conventional power modeling techniques for ASICs. In this paper, a novel power model for FPGA is proposed considering both pass transistors and MUXes, two major components of FPGA routing resources. A novel power model for the pass transistor is developed considering the varying input and output voltages, which highly improves the accuracy in power estimation. The average error in dynamic power for pass transistor chains and MUXes is below 3% and 5%, respectively, as compared to HSPICE simulations.

1. Introduction

Field Programmable Gate Array (FPGA) has its unique advantage over Application Specific Integrated Circuits (ASICs) in fast implementation of various digital circuits. However, the advantage of FPGA is obtained at the cost of lower speed, larger area, and higher power consumption (especially on routing resources) as compared to ASICs. In addition, the programmable feature of FPGA increases the complexity for the power estimation. This situation is mainly caused by the flexible Static Random Access Memory (SRAM) configurations and pass transistor (PT)-based architecture.

In the traditional *RC* power model of PTs [4], it is assumed that the power consumed by resistive components (resistive power) equals to the power stored in the capacitive components (capacitive power), which is a rough estimation for PTs. Considering the power consumed during the charge and discharge process of capacitances [1], the dynamic power of FPGA can be characterized by

$$P_{avg} = \sum_{n \in Nets} C_n \cdot V^2 \cdot f_n , \qquad (1)$$

where P_{avg} is average power consumption, C_n represents the capacitance of a net n, V is the supply voltage, and f_n is the switching frequency of net n.

Based on this assumption, Wilton *et al*. [2] proposed a flexible and detailed power model for FPGAs. The power of LUTs and MUXes under different SRAM configurations can be obtained with an error of 13% and 20%, respectively, as compared to HSPICE simulations. Li *et al.* [3] implemented power estimation for FPGAs with a mix-level power model, where the switch-level model is applied for MUXes. The overall average error was 8% with a worst error up to 20%.

To more accurately model the power of the routing resources including PT chains and MUXes, a new power model is proposed for FPGA in this paper. In our power model, a more accurate *RC* model of PTs [5] is adopted. The varying input and output voltages of PTs are determined with this model. The resistive power is shown to be highly affected by the timing constants of voltages. Based on this new *RC* model, the power consumed by PT chains and MUXes is accurately captured.

The proposed power model for FPGA routing sources is presented in the following section, where the power model for a PT, a PT chain, and a MUX is respectively presented. The simulation results are shown in Section III. The proposed model is compared with conventional models and HSPICE simulations. The conclusions are drawn in the end.

2. Accurate Dyanmic power model

2.1 The First-Order RC Network for PT

A PT is illustrated in Figure 1. In the traditional PT model for FPGA [2] [3], since the resistive power is assumed to be equal to the capacitive power, only the capacitance of PTs is considered, as shown by Figure 1(b).

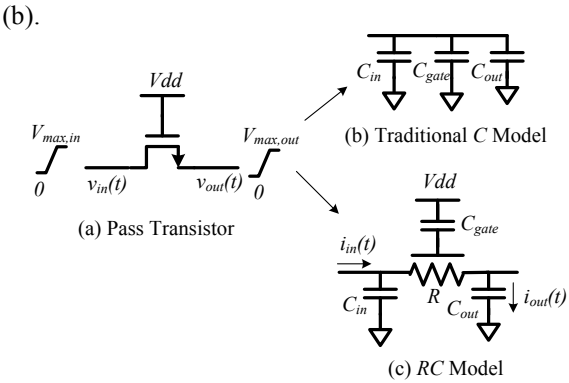

Figure 1. An nmos pass-transistor and the equvilant models

However, the actual resistive power is different from the capacitive power, since both the input and output voltages of a PT are not constant.

978-1-4673-2475-5/12/$31.00 ©2012 IEEE

Authorized licensed use limited to: Huawei Technologies Co Ltd. Downloaded on May 24,2024 at 16:37:40 UTC from IEEE Xplore. Restrictions apply.

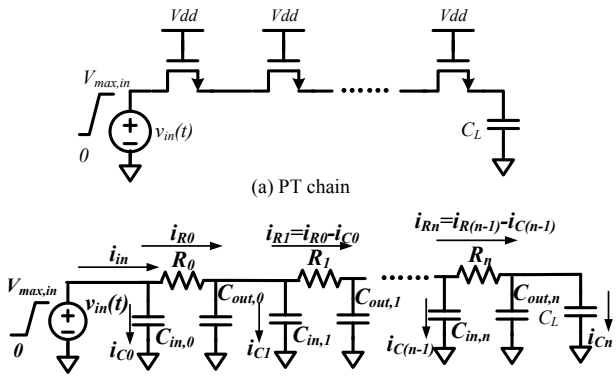

(a) PT chain

(b) Equivalent *RC* model for a PT chain

Figure 2. PT chain and *RC* chain with current marks

In the proposed power model, the first-order *RC* model for PT [4] is used to calculate these voltages, as shown in Figure 1(c). The voltages of pass transistors in a PT can be, respectively, modeled by

$$v_{in}(t) = V_{\max,in}(1 - e^{-\frac{t}{\tau_{in}}}) \ , \tag{2}$$

$$v_{out}(t) = V_{\max,out}(1 - e^{-\frac{t}{\tau_{out}}}) \ , \tag{3}$$

where τ_{in} and τ_{out} represent the timing constant of the input and output voltage, respectively. $V_{max,in}$ and $V_{max,out}$ denote the maximum voltage of $v_{in}(t)$ and $v_{out}(t)$, respectively.

The total energy $E_{in,PT}$ provided to this pass transistor is determined by $v_{in}(t)$ and $i_{in}(t)$ [4]. This energy consists of the energy stored in C_{in} and the energy consumed by the downstream components.

$$\begin{aligned} E_{PT} &= \int_0^{\infty} v_{in}(t) i_{in}(t) dt \\ &= \frac{1}{2} C_{in} V_{\max,in}^2 + \int_0^{\infty} v_{in}(t) \cdot C_{out} \frac{dv_{out}(t)}{dt} dt \\ &= \frac{1}{2} C_{in} V_{\max,in}^2 + \frac{\tau_{out}}{\tau_{in} + \tau_{out}} C_{out} V_{\max,in} V_{\max,out} \end{aligned} \tag{4}$$

The energy stored in the capacitors is,

$$E_{cap} = \frac{1}{2} C_{in} V_{\max,in}^2 + \frac{1}{2} C_{out} V_{\max,out}^2 \ . \tag{5}$$

For the falling input, E_{cap} is consumed by resistors when the capacitors are discharging. Consequently, no energy is consumed from the supply [6]. This *RC* model is used to obtain the energy of a PT chain in the following sub-section.

2.2 The power consumption of a PT chain

PT chains are a typical element in both routing and logic resources. A PT chain can be modeled as a series of the first-order *RC* networks as illustrated in Figure 2.

In Figure 2(b), $i_{in}(t)$ is the sum of $i_{Cj}(t)$ ($0 \leqslant j \leqslant n$).

$$i_{in}(t) = \sum_{j=0}^{n} i_{C_j}(t) \ . \tag{6}$$

Thereafter, the power consumed by a PT chain can be estimated through (4) by

$$\begin{aligned} E_{RC-chain} &= \int_0^{\infty} v_{in}(t) i_{in}(t) dt \\ &= \frac{1}{2} C_0 V_{\max,in}^2 + \int_0^{\infty} v_{in}(t) \sum_{j=1}^{n} i_{C_j}(t) dt \\ &= \frac{1}{2} C_0 V_{\max,in}^2 + \sum_{i=1}^{n} \int_0^{\infty} v_{in}(t) \cdot C_i \frac{dv_{out,i}(t)}{dt} dt \\ &= \frac{1}{2} C_0 V_{\max,in}^2 + V_{\max,in} \sum_{i=0}^{n} \frac{\tau_i}{\tau_i + \tau_0} C_i V_{\max,out,i} \end{aligned} \ , \tag{7}$$

where timing constant τ_i is calculated based on Elmore delay model [7].

2.3 The power consumption of a MUX

A MUX with a specified configuration value *SRAM*[0:1]=[1,1] is illustrated in Figure 3(a). Each path of the MUX can be modeled as a PT chain, as shown in Fig 3(b).

错误！链接无效。

Figure 3. Equivalent *RC*-chains of a 4-input MUX

For each PT chain, the energy of input voltage can be determined through (7). The total energy consists of the power consumed by all the PT chains,

$$E_{total} = E_{in0} + \frac{1}{2} C_{in,1} V_{\max,in,1}{}^2 + E_{in2} + \frac{1}{2} C_{in,3} V_{\max,in,3}{}^2 \tag{8}$$

where $V_{max,in,i}$ represents the maximum voltage of input *Ini* and E_{in0} and E_{in2} are derived from equation (7).

3. Experimental results

The accuracy of the proposed power model is verified over HSPICE simulations. Firstly, a comparison between the proposed model on PT chain and HSPICE simulations is shown. Then, the accuracy in the power estimation for MUXes among different power models and HSPICE simulations is presented. All experiments are implemented with TSMC 180nm and TSMC 65nm technology, BSIM4, level 54 model.

Authorized licensed use limited to: Huawei Technologies Co Ltd. Downloaded on May 24,2024 at 16:37:40 UTC from IEEE Xplore. Restrictions apply.

3.1 The accruracy of the power model for PT chains

PT chains with different technologies and lengths are simulated. The input slew is randomly selected between 100 ps and 200 ps. The results are reported in Table 1. As listed in this table, the average error of the power model for PT chains is below 3%.

Table 1. Experimental results on pass transistor chain

$E_{in}(nW)$	0.18um Process			65nm Process		
Length	**Model**	**Hspice**	**Error**	**Model**	**Hspice**	**Error**
2	68.57	72.67	5.64%	7.79	8.39	7.16%
3	108.08	109.43	1.23%	10.55	10.91	3.29%
4	151.92	148.95	1.99%	13.45	13.57	0.86%
5	199.69	192.22	3.88%	16.46	16.39	0.47%
6	250.72	240.04	4.45%	19.56	19.39	0.91%
7	304.37	302.34	0.67%	22.73	22.58	0.69%
8	360.08	358.54	0.43%	25.96	25.98	0.07%
9	417.41	417.55	0.03%	29.23	29.56	1.13%
10	476.01	478.89	0.60%	32.53	33.32	2.36%
Avg. Err	2.00%			2.71%		

3.2 The accuracy of the power model for MUXes

Due to the large number of SRAM values for MUX configurations and the input patterns and slews， it is difficult to traverse all the possible cases of PT chains modeling a MUX. Consequently, the configuration SRAM values and the input patterns and slews are randomly generated for simulations. Different sizes of MUX are simulated (from four to 32 inputs), with 500 simulations for each case. The Wilton model [2] and switch-level model [3] introduced in Section I are also implemented for comparison.

The average error between the results from different models and HSPICE simulations are shown in Figure 4. The Wilton model and Switch-level model both produce an error over 20%. The average error of the proposed power model is only 5%. A significant improvement in the accuracy of power estimation is obtained.

4. Conlusion

A novel dynamic power model for FPGA routing sources is proposed based on the first-order *RC* network of pass transistors. The average error on the power of PT chains and MUXes between the proposed model and HSPICE simulations is below 3% and 5%, respectively. In summary, the proposed power model provides a highly fast method to accurately estimate the power consumed by the routing resources in FPGAs.

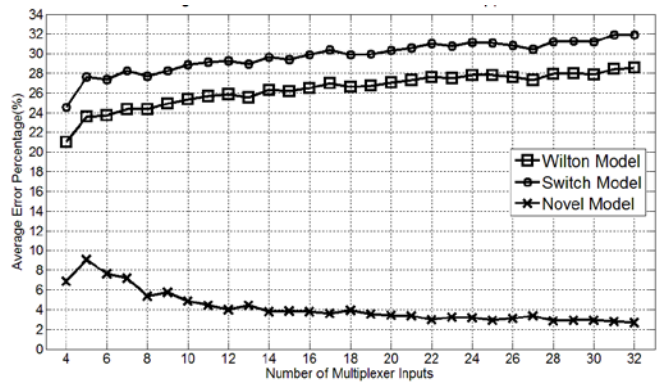

Figure 4. MUX power estimation results.

Acknowledgments

This work has been supported by National Natural Science Foundation of China under grants 61131001 and 61171001, and FDUROP (Fudan's Undergraduate Research Opportunities Program) under Grant No. 10030.

5. References

[1] Jason H. Anderson and Farid N. Najm, "Power Estimation Techniques for FPGAs," *IEEE Transactions on Very Large Scale Integration (VLSI) Systems*, 12(10), pp. 1015-1027, 2004.

[2] Kara K. W. Poon, Steve Wilton, and Andy Yan, "A Detailed Power Model for Field Programmable Gate Arrays," *ACM Transactions on Design Automation of Electronic Systems*, 10(2), pp. 279-302, 2005.

[3] Fei Li, Yan Lin, Lei He, Deming Chen, and Jason Cong, "Power Modeling and Characteristics of Field Programmable Gate Arrays", *IEEE Transaction on Computer-Aided Design of Integrated Circuits and Systems*, 24(11), pp. 1712-1724, (2005).

[4] Jan M. Rabaey *et al, Digital Integrated Circuits: A Design Perspective*, Ed. 2, Publishing House of Electronics Industry, (2004).

[5] Eddie Hung, Steven J. E. Wilton *et al*, "A Detailed Delay Path Model for FPGAs", in *Proceedings Of IEEE International Conference on Field-Programmable Technology*, pp. 96-103, (2009).

[6] S. M. Kang, "Accurate Simulation of Power Dissipation in VLSI circuits," *IEEE Journal of Solid-State Circuits*, 21(5), pp. 889-891, (1986).

[7] E. Elmore, "The Transient Response of Damped Linear Networks with Particular Regard to Wideband Amplifiers," *Journal of Applied Physics*, pp. 55-63, (1948).

[8] F. Bernabei *et al*, "Analysis of Two Level Shaping for Multiplexing of ON-OFF ATM Sources," in *Proceedings of IEEE International Conference on Communications*, 3, pp. 1380-1385, (1993).

Authorized licensed use limited to: Huawei Technologies Co Ltd. Downloaded on May 24,2024 at 16:37:40 UTC from IEEE Xplore. Restrictions apply.