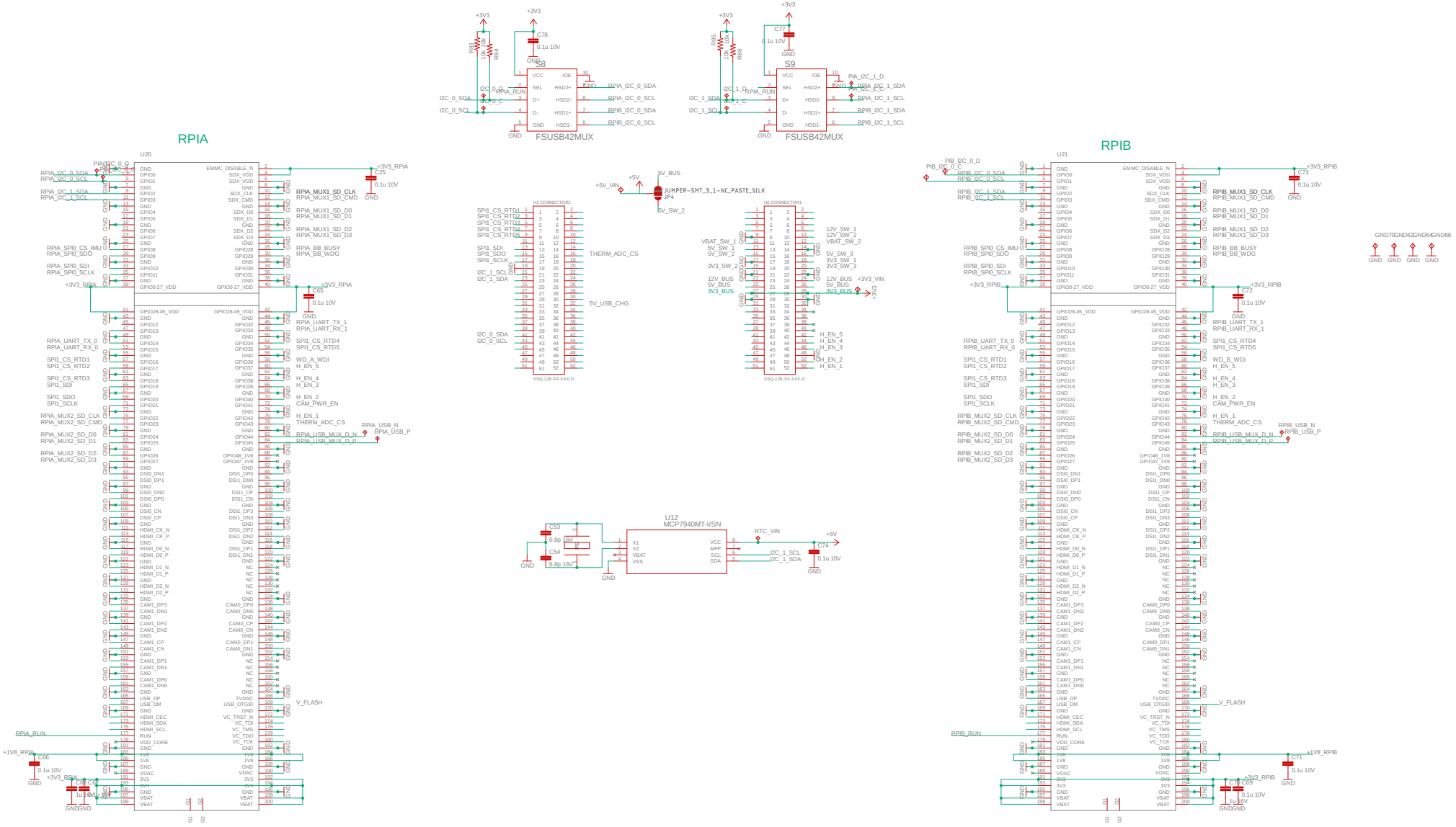
RPIA
U20
RPIB
U21
S8
FSUSB42MUX
S9
FSUSB42MUX
U12
MCP7940MT-I/SN
JUMPER-SMT_3_1-NC_PASTE_SILK
JP4
THERM_ADC_CS
5V_USB_CHG
RPIA_RUN
RPIB_RUN
V_FLASH
RPIA_USB_N
RPIA_USB_P
RPIB_USB_N
RPIB_USB_P

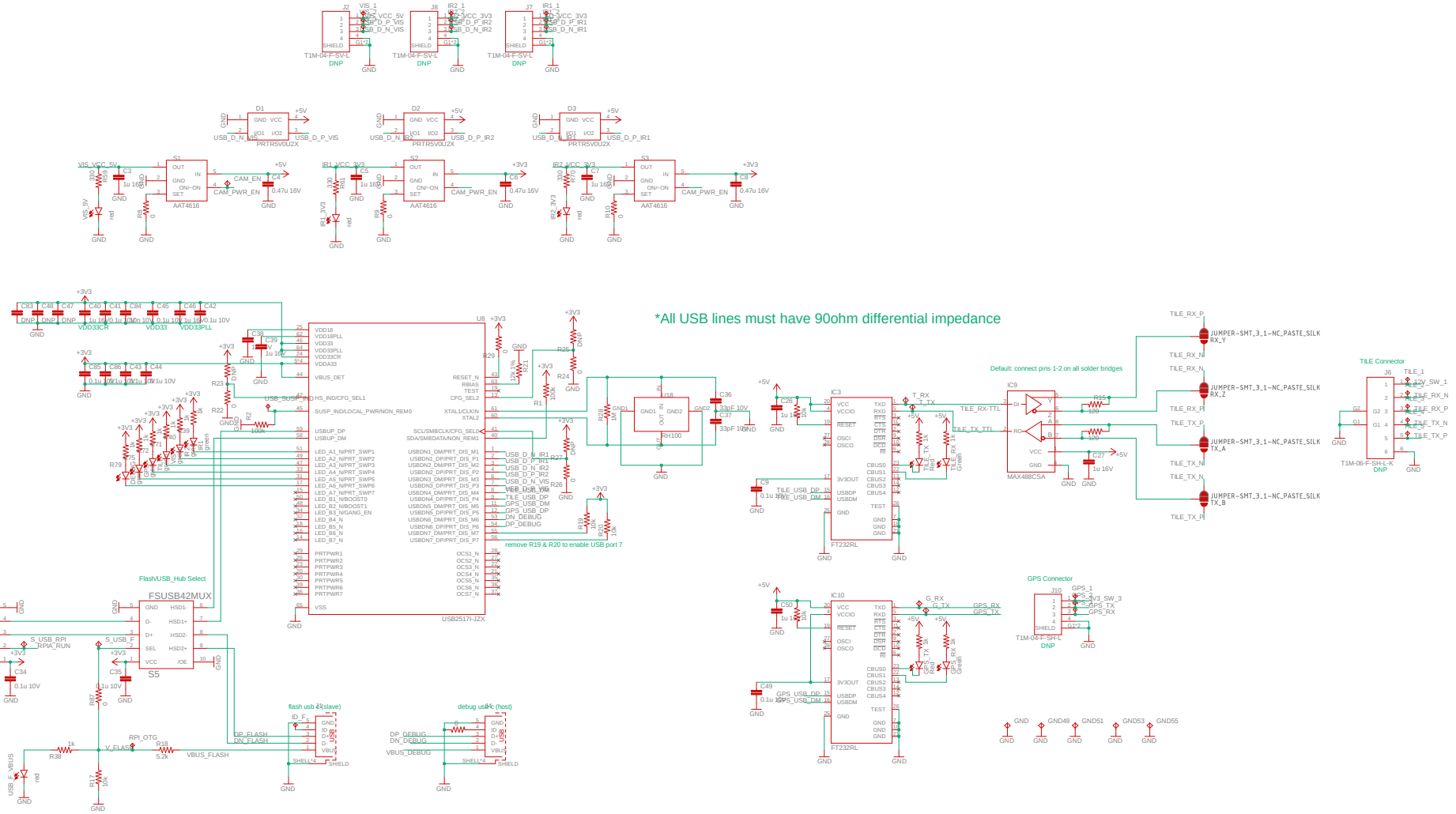
*All USB lines must have 90ohm differential impedance
remove R19 & R20 to enable USB port 7
Default: connect pins 1-2 on all solder bridges
RPI Select
Flash/USB_Hub Select
FSUSB42MUX
USB2517I-JZX
MAX488CSA
FT232RL
TILE Connector
GPS Connector
flash usb 2 (slave)
debug usb 2 (host)

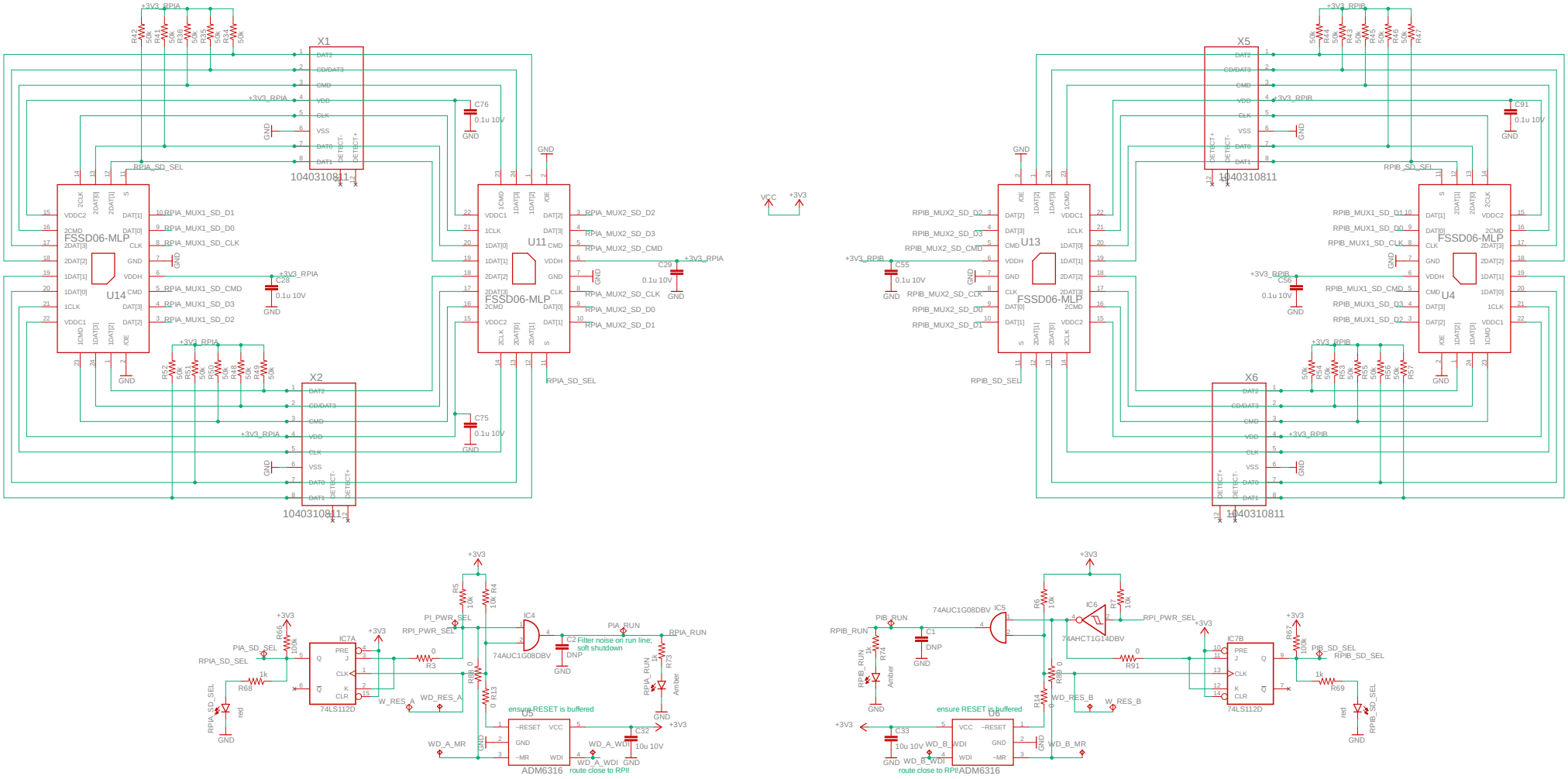

4/23/2020 03:57 f=0.51 C:\Users\Charles\Desktop\beavercube-pcb\BeaverCube_projects\BeaverCube_C&DH\BeaverCube_C&DH.sch (Sheet: 3/5)

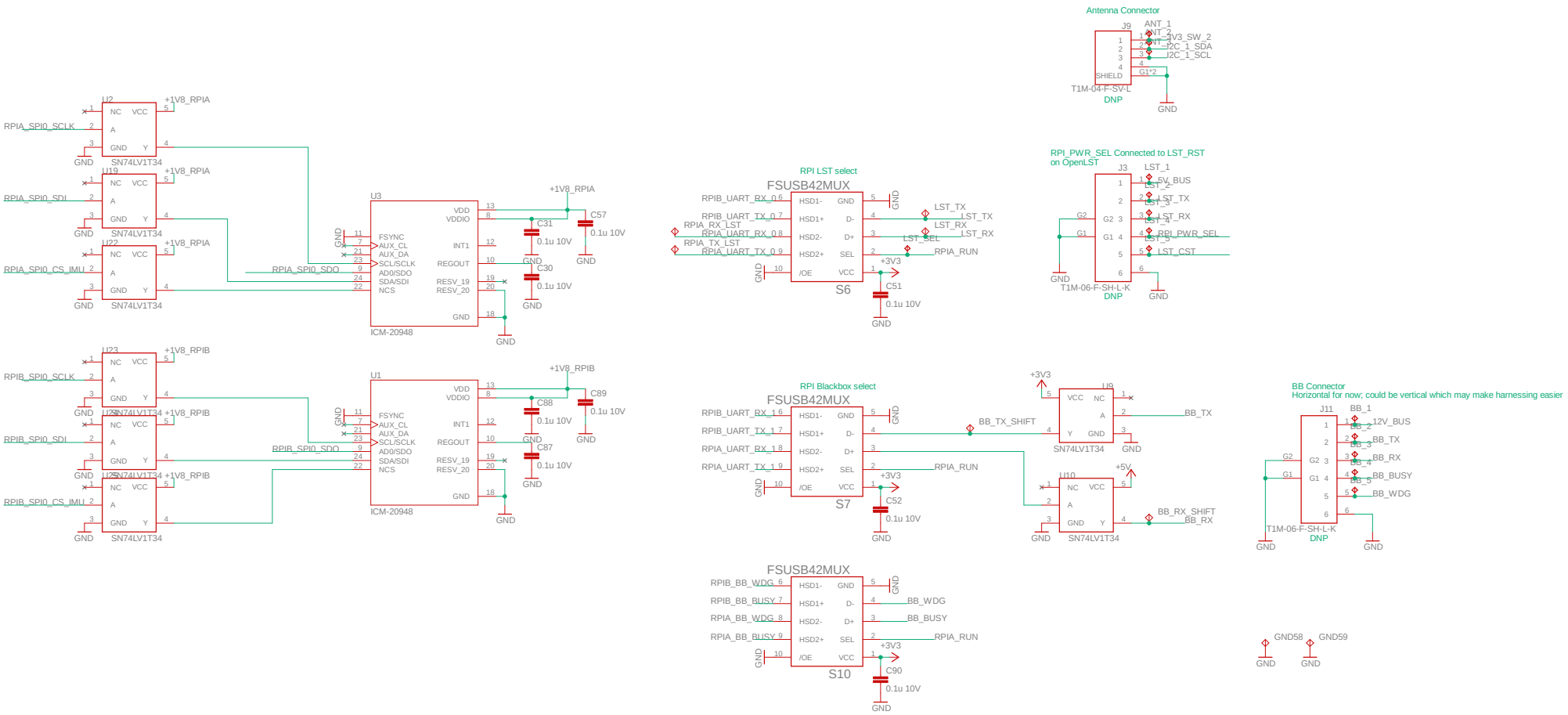
Antenna Connector
J9
ANT_1
ANT_2
3V3_SW_2
ANT_3
I2C_1_SDA
ANT_4
I2C_1_SCL
SHIELD
G1*2
T1M-04-F-SV-L
DNP
GND
RPI_PWR_SEL Connected to LST_RST on OpenLST
J3
LST_1
5V_BUS
LST_2
LST_3
LST_TX
LST_4
LST_RX
LST_5
RPI_PWR_SEL
LST_CST
LST_6
G2
G1
T1M-06-F-SH-L-K
DNP
RPI LST select
FSUSB42MUX
RPIB_UART_RX_0
RPIA_RX_LST
RPIB_UART_TX_0
RPIA_UART_RX_0
RPIA_TX_LST
RPIA_UART_TX_0
HSD1-
HSD1+
HSD2-
HSD2+
/OE
GND
D-
D+
SEL
VCC
LST_TX
LST_RX
LST_SEL
RPIA_RUN
+3V3
C51
0.1u 10V
S6
RPI Blackbox select
FSUSB42MUX
RPIB_UART_RX_1
RPIB_UART_TX_1
RPIA_UART_RX_1
RPIA_UART_TX_1
BB_TX_SHIFT
RPIA_RUN
C52
0.1u 10V
S7
U9
VCC
NC
A
Y
SN74LV1T34
BB_TX
U10
BB_RX_SHIFT
BB_RX
+5V
FSUSB42MUX
RPIB_BB_WDG
RPIB_BB_BUSY
RPIA_BB_WDG
RPIA_BB_BUSY
BB_WDG
BB_BUSY
RPIA_RUN
C90
0.1u 10V
S10
BB Connector
Horizontal for now; could be vertical which may make harnessing easier
J11
BB_1
12V_BUS
BB_2
BB_TX
BB_3
BB_RX
BB_4
BB_BUSY
BB_5
BB_WDG
BB_6
T1M-06-F-SH-L-K
DNP
GND58
GND59
U2
U19
U22
U23
U24
U25
NC
VCC
A
GND
Y
SN74LV1T34
+1V8_RPIA
+1V8_RPIB
RPIA_SPI0_SCLK
RPIA_SPI0_SDI
RPIA_SPI0_CS_IMU
RPIB_SPI0_SCLK
RPIB_SPI0_SDI
RPIB_SPI0_CS_IMU
RPIA_SPI0_SDO
RPIB_SPI0_SDO
U3
U1
FSYNC
AUX_CL
AUX_DA
SCL/SCLK
AD0/SDO
SDA/SDI
NCS
VDD
VDDIO
INT1
REGOUT
RESV_19
RESV_20
ICM-20948
C31
C30
C57
C88
C87
C89
0.1u 10V

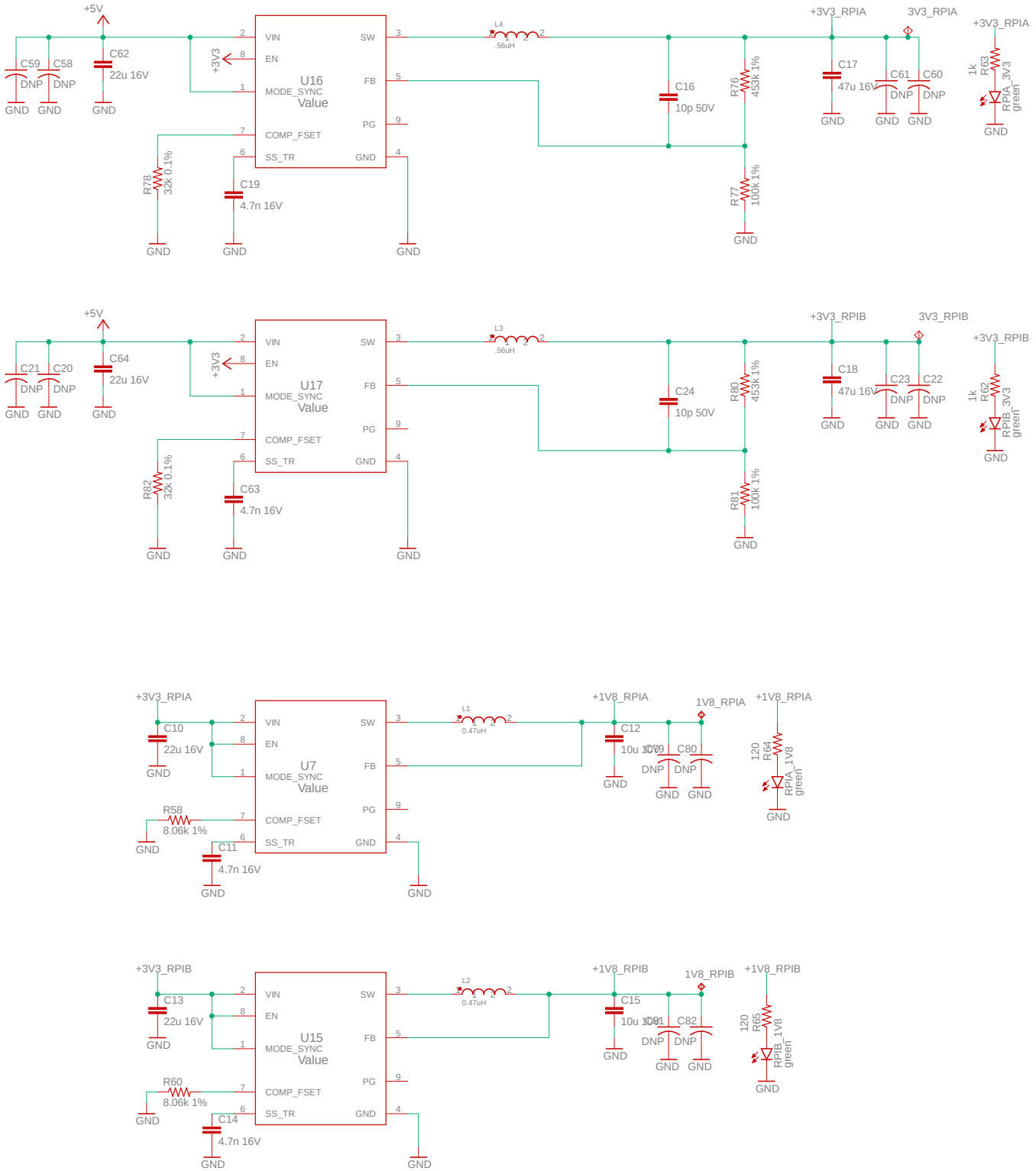
+5V
C59
C58
DNP
DNP
C62
22u 16V
GND
+3V3
U16
VIN
EN
MODE_SYNC
Value
COMP_FSET
SS_TR
SW
FB
PG
GND
L4
.56uH
C16
10p 50V
R76
453k 1%
R77
100k 1%
R78
32k 0.1%
C19
4.7n 16V
+3V3_RPIA
3V3_RPIA
C17
47u 16V
C61
C60
R63
1k
RPIA_3V3
RPIA
green
U17
L3
C24
R80
R81
R82
C63
C64
C21
C20
+3V3_RPIB
3V3_RPIB
C18
C23
C22
R62
RPIB_3V3
RPIB
U7
L1
0.47uH
C10
R58
8.06k 1%
C11
C12
C79
C80
R64
120
RPIA_1V8
+1V8_RPIA
1V8_RPIA
U15
L2
C13
R60
C14
C15
C81
C82
R65
RPIB_1V8
+1V8_RPIB
1V8_RPIB