huge page tables

huge virtual address spaces!

impossible to store PTE for every page

how can we save space?

holes

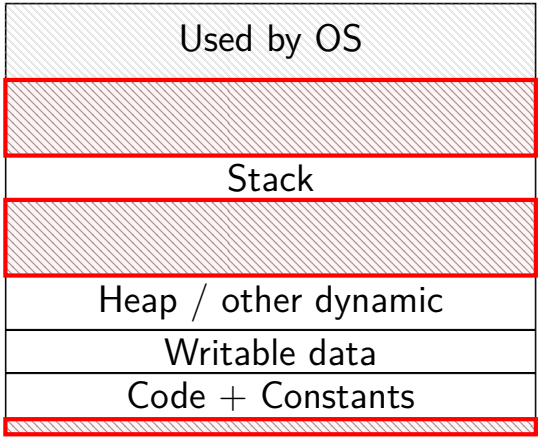

most pages are invalid

saving space

basic idea: don't store (most) invalid page table entries

use a data structure other than a flat array

want a map — lookup key (virtual page number), get value (PTE)

options?

saving space

basic idea: don't store (most) invalid page table entries

use a data structure other than a flat array

- want a map — lookup key (virtual page number), get value (PTE)

options?

hashtable

- actually used by some historical processors
- but never common

saving space

basic idea: don't store (most) invalid page table entries

use a data structure other than a flat array

- want a map — lookup key (virtual page number), get value (PTE)

options?

hashtable

- actually used by some historical processors
- but never common

tree data structure

- but not quite a search tree

search tree tradeoffs

lookup usually implemented in hardware

- lookup should be simple
- solution: lookup splits up address bits (no complex calculations)

lookup should not involve many memory accesses

- doing two memory accesses is already very slow
- solution: tree with many children from each node
  - (far from binary tree's left/right child)

two-level page tables

two-level page tables for 65536 pages (16-bit VPN; 256 entries/table)

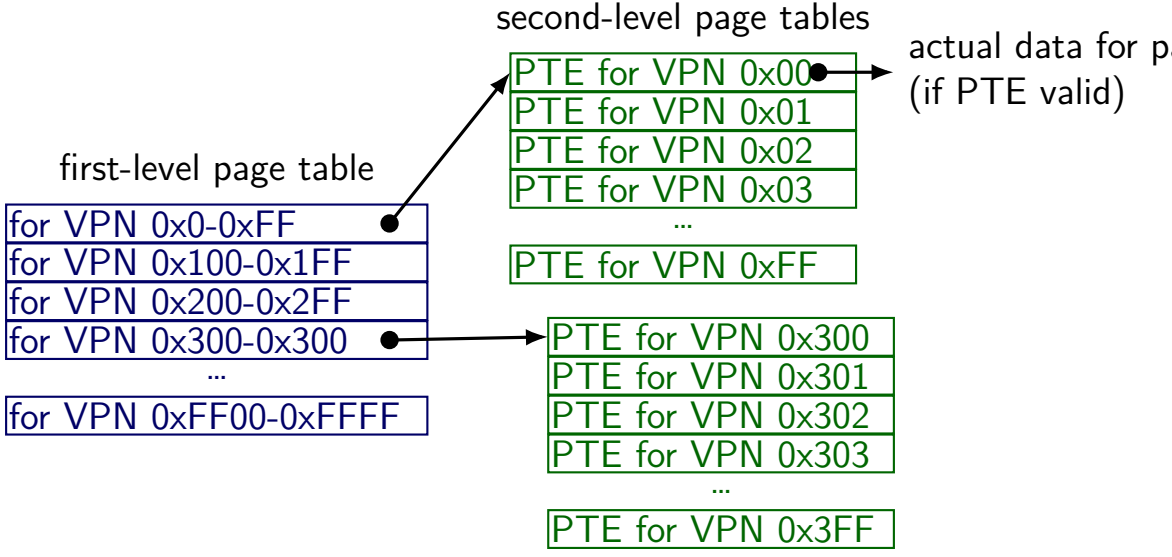

two-level page tables

two-level page tables for 65536 pages (16-bit VPN; 256 entries/table)

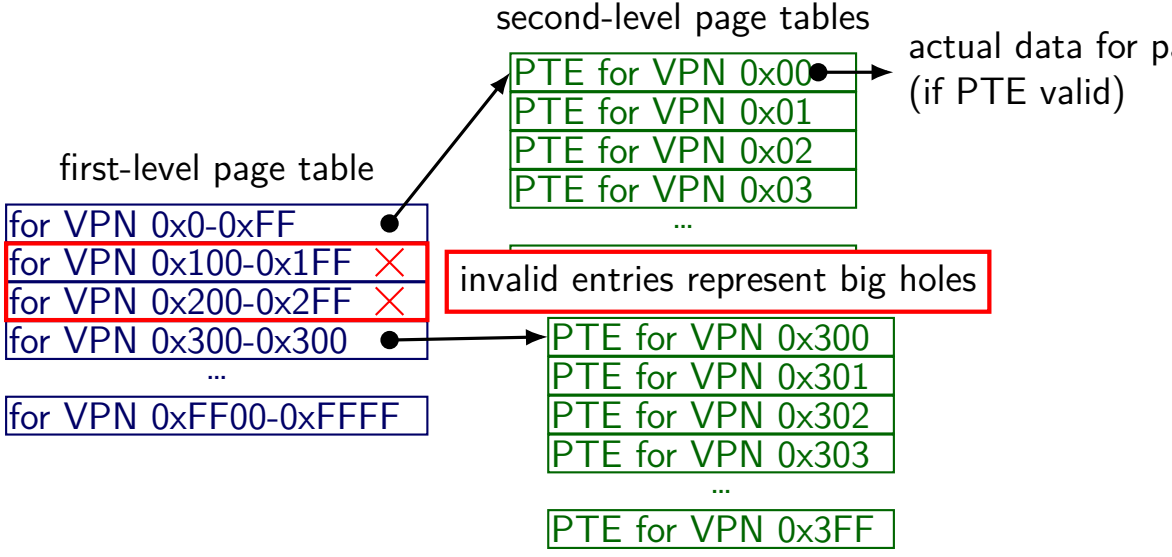

two-level page tables

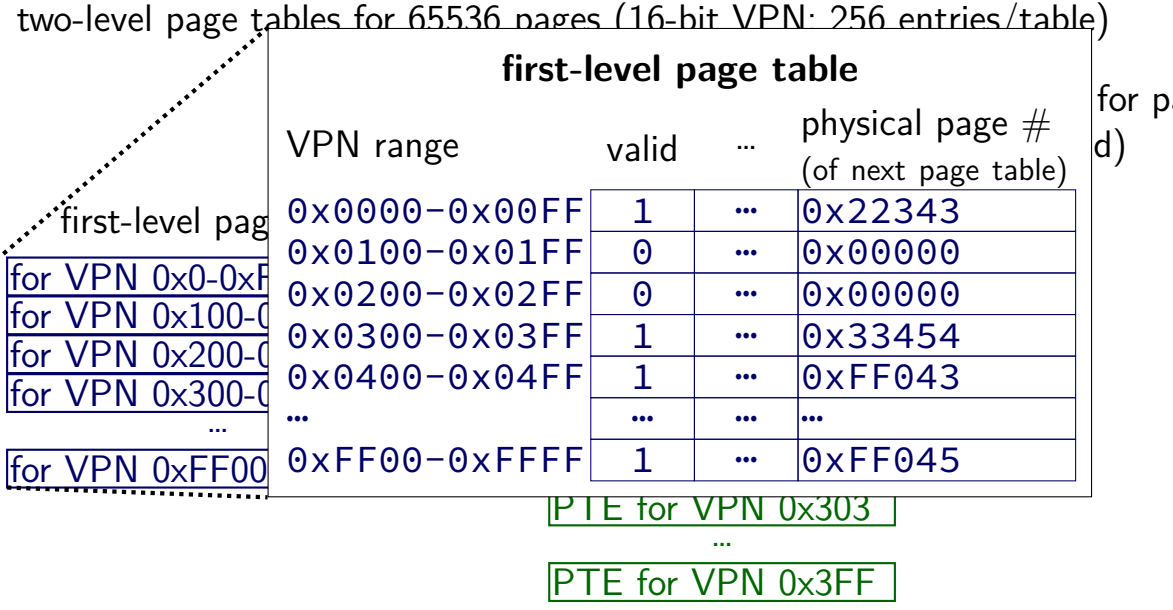

two-level page tables

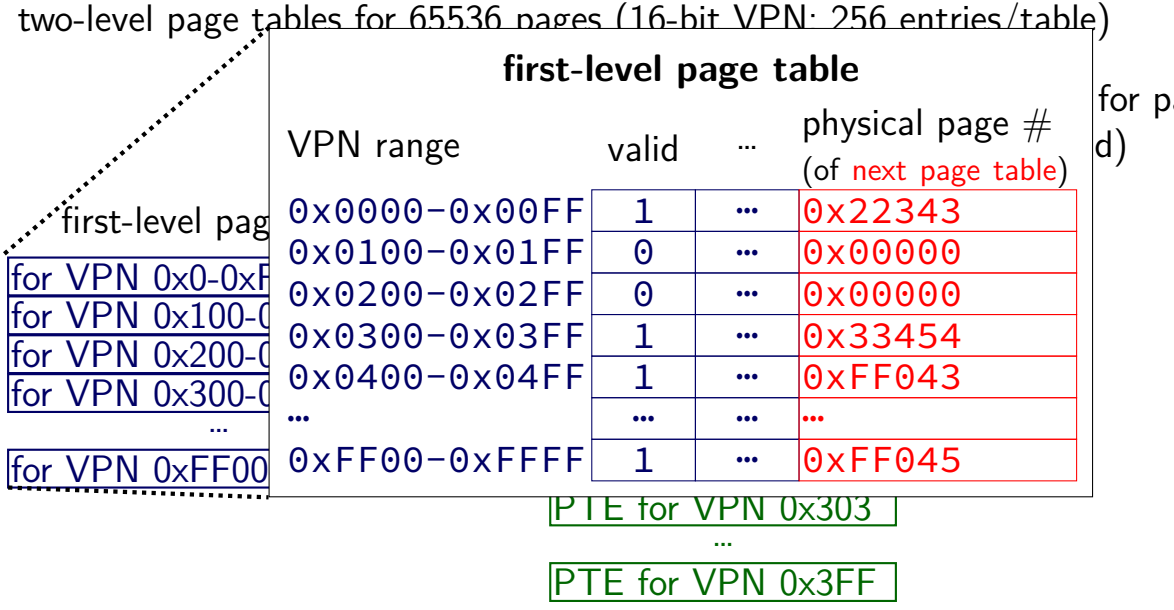

two-level page tables

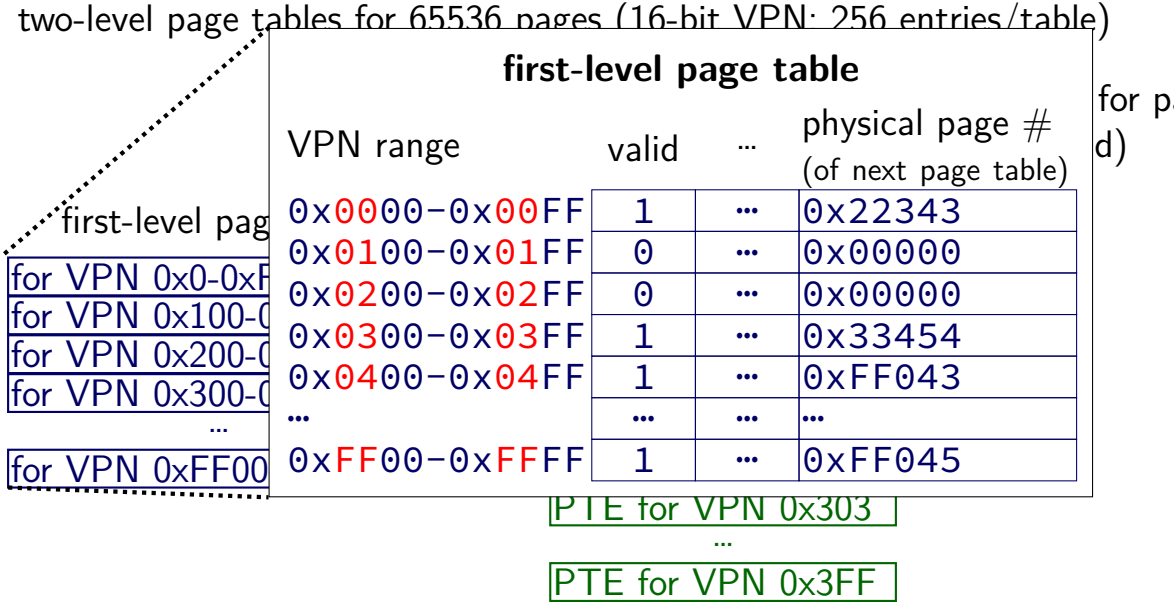

two-level page tables

two-level page tables for 65536 pages (16-bit VPN: 256 entries/table)

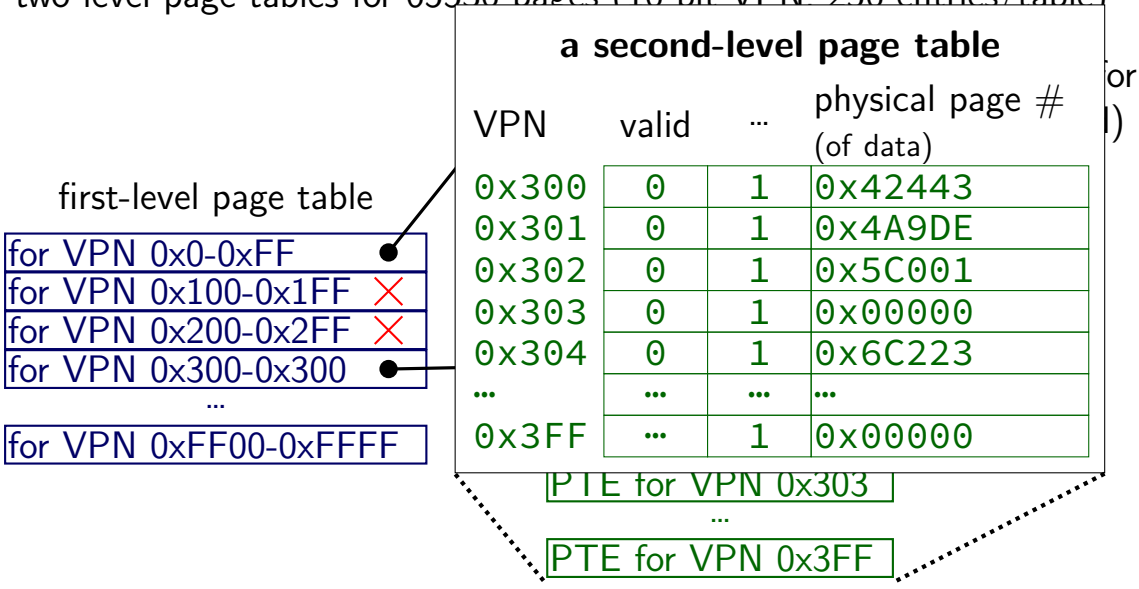

two-level page tables

two-level page tables for 65536 pages (16-bit VPN: 256 entries/table)

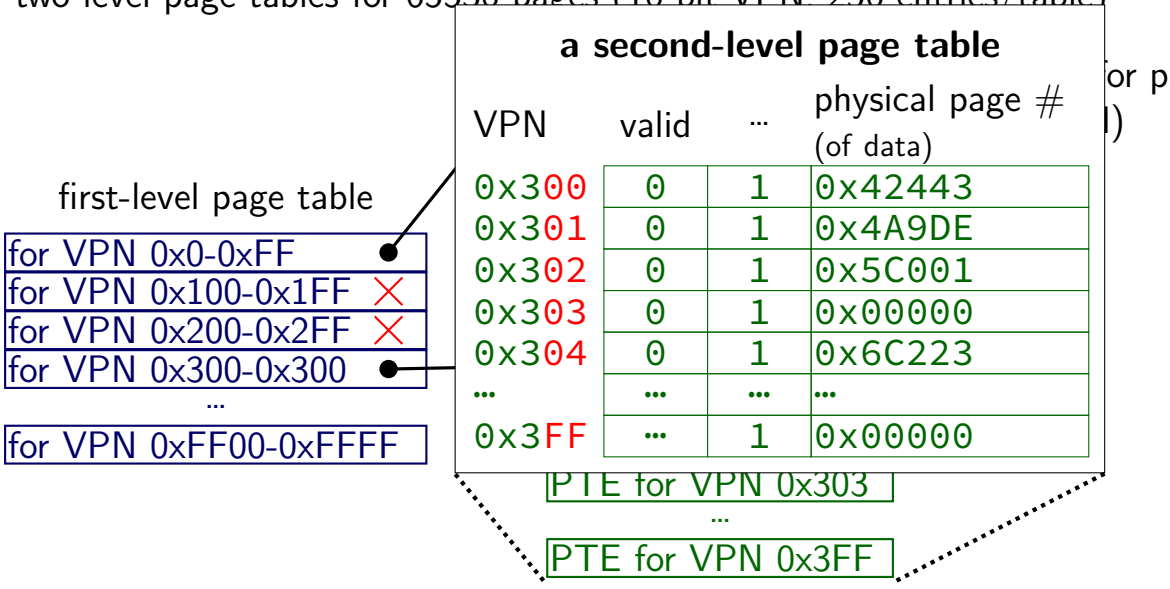

two-level page tables

two-level page tables for 65536 pages (16-bit VPN; 256 entries/table)

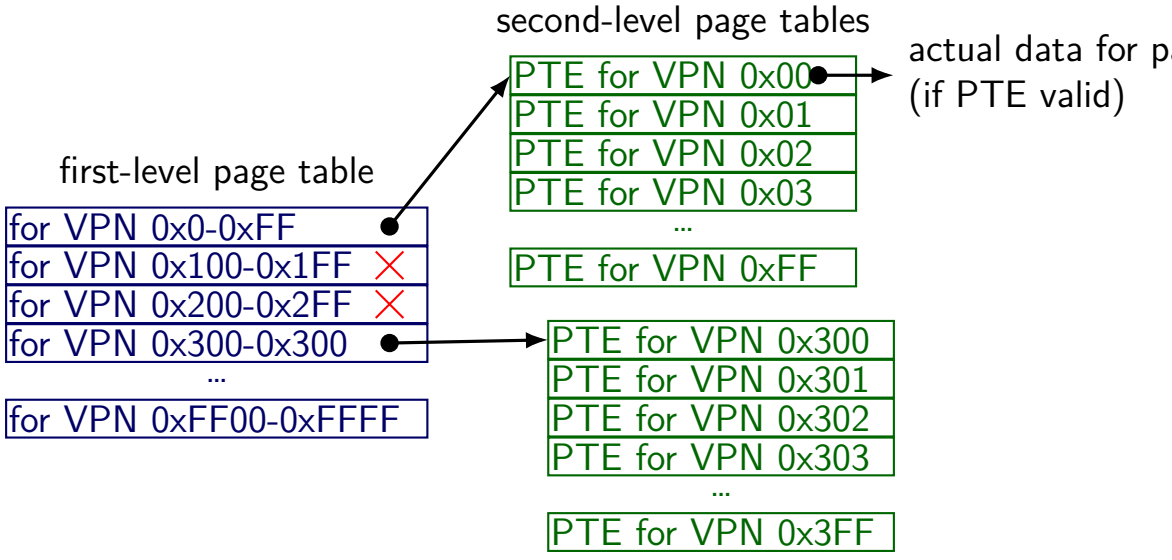

two-level page table lookup

virtual address

VPN — split into two parts (one per level)

this example: parts equal sized — common, but not required

two-level page table lookup

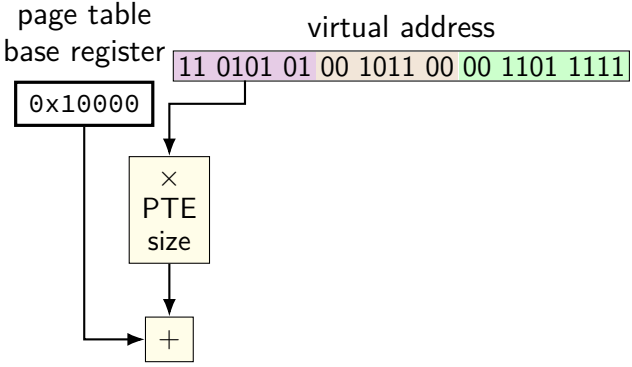

two-level page table lookup

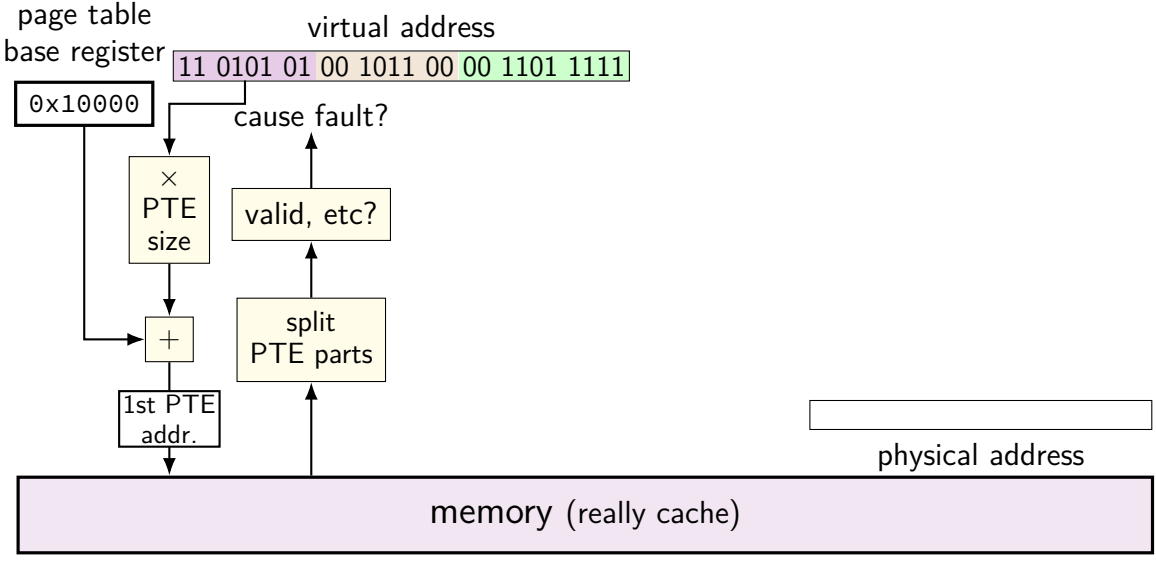

two-level page table lookup

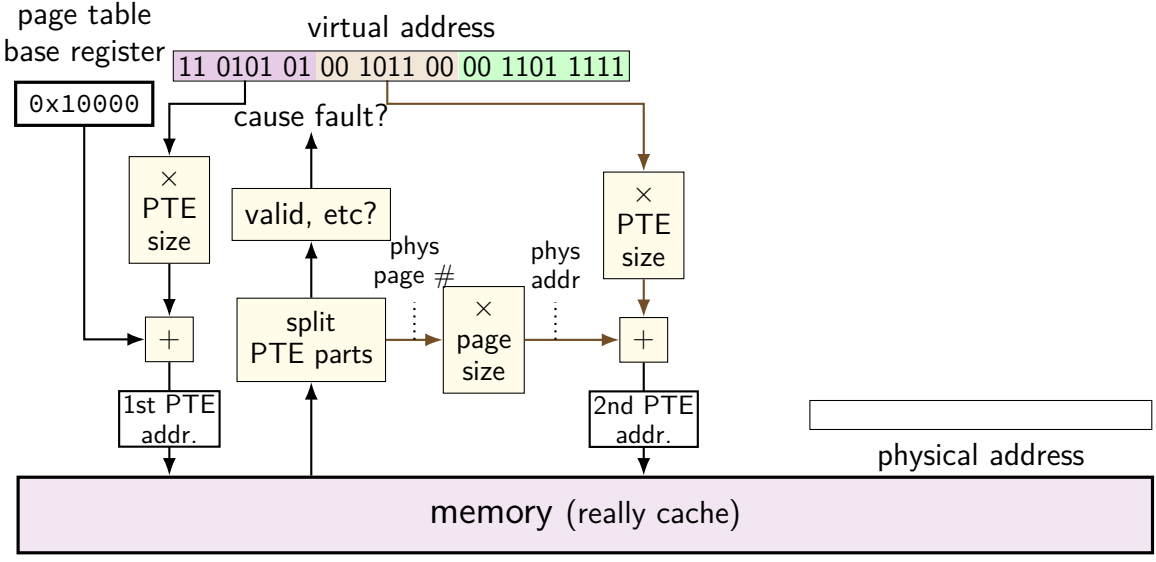

two-level page table lookup

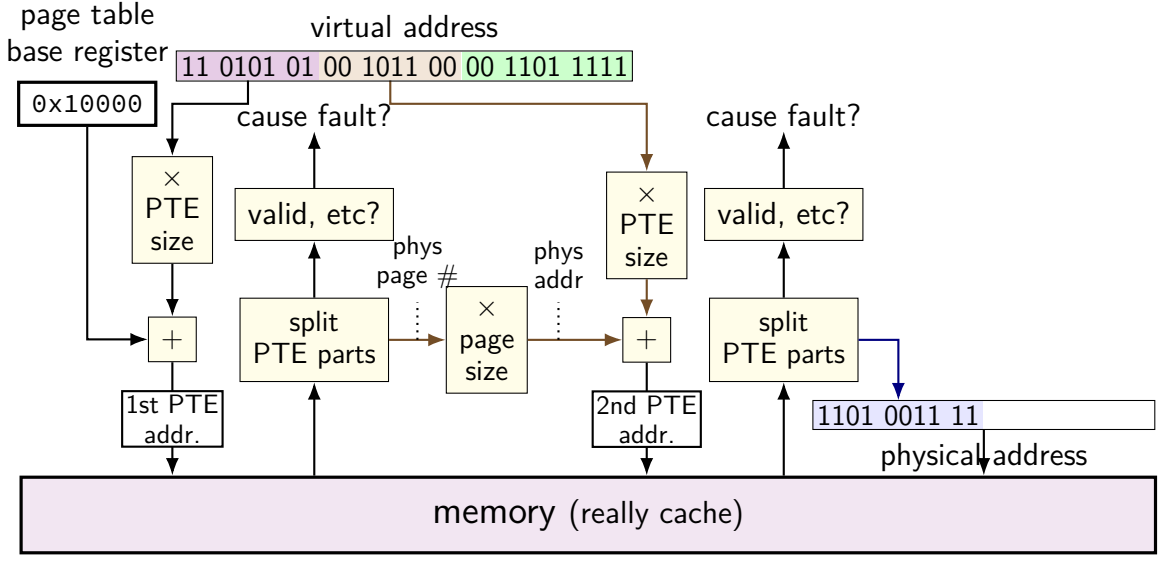

two-level page table lookup

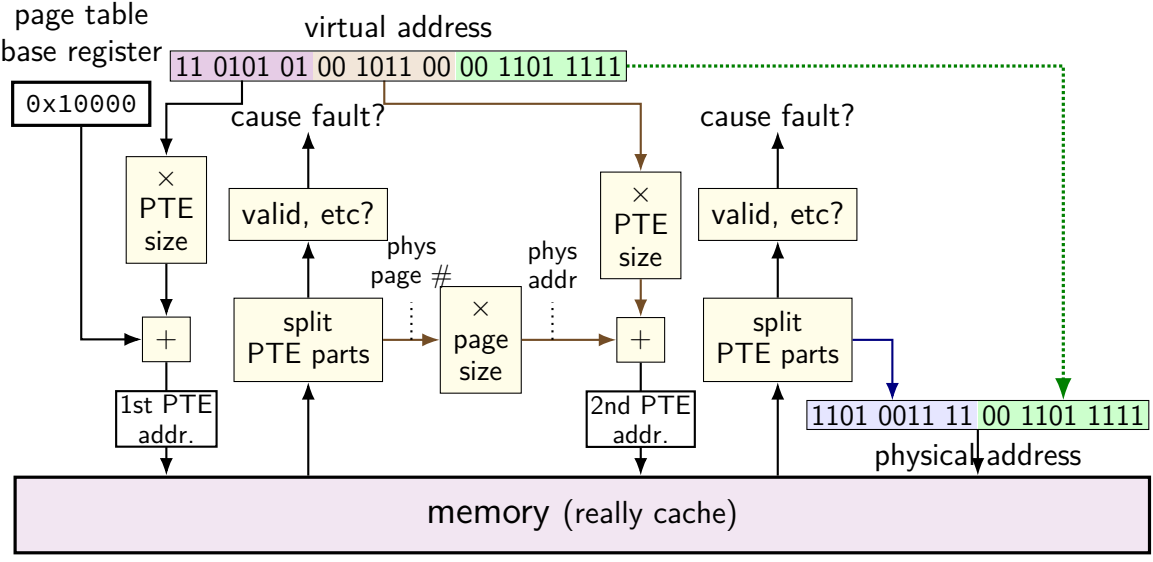

two-level page table lookup

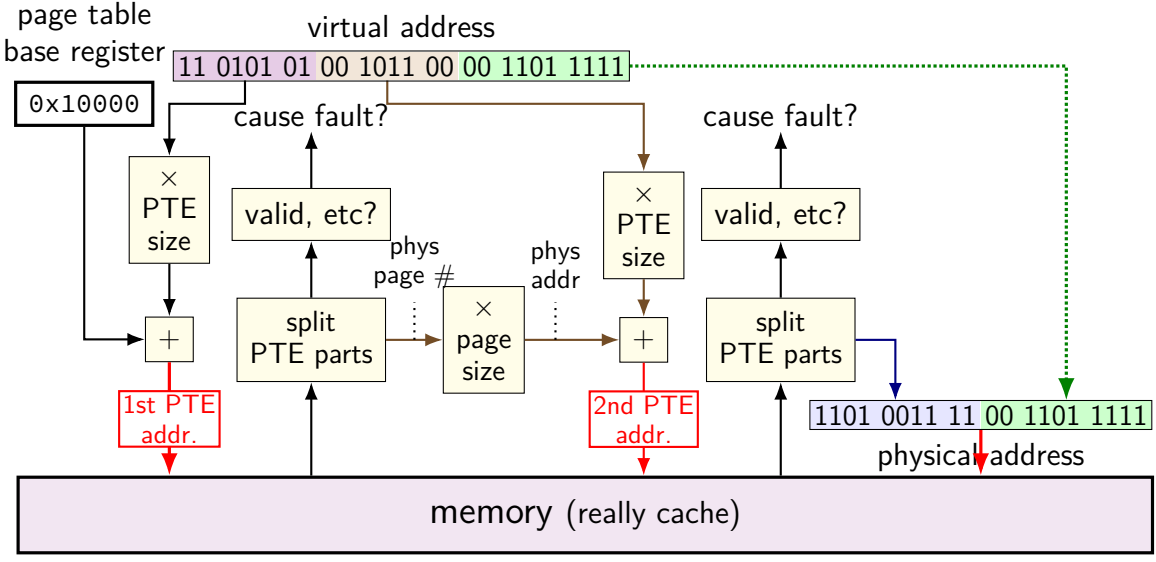

two-level page table lookup

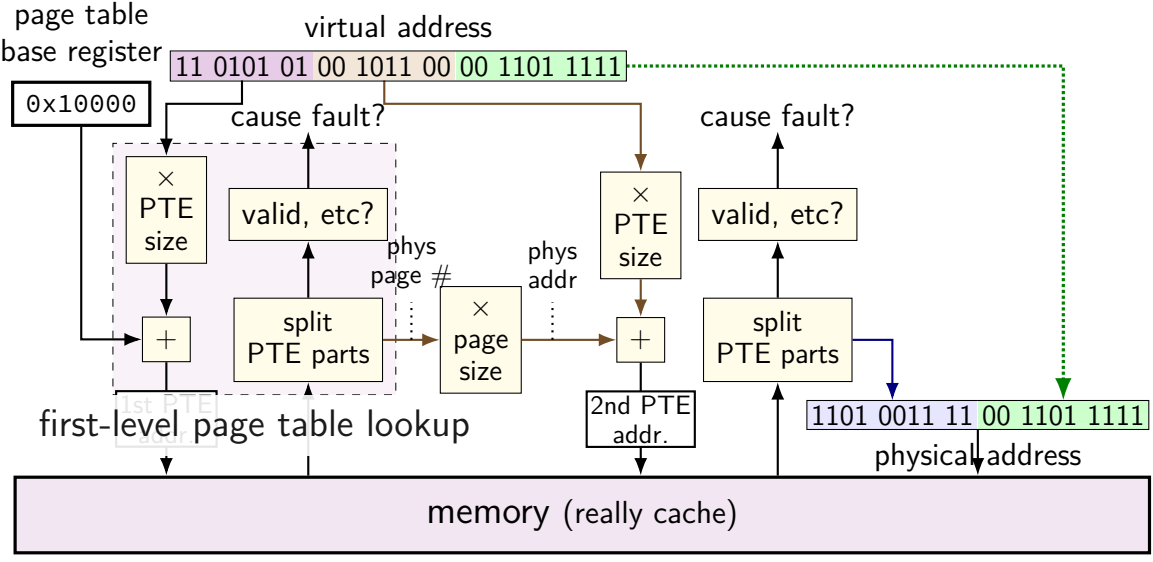

two-level page table lookup

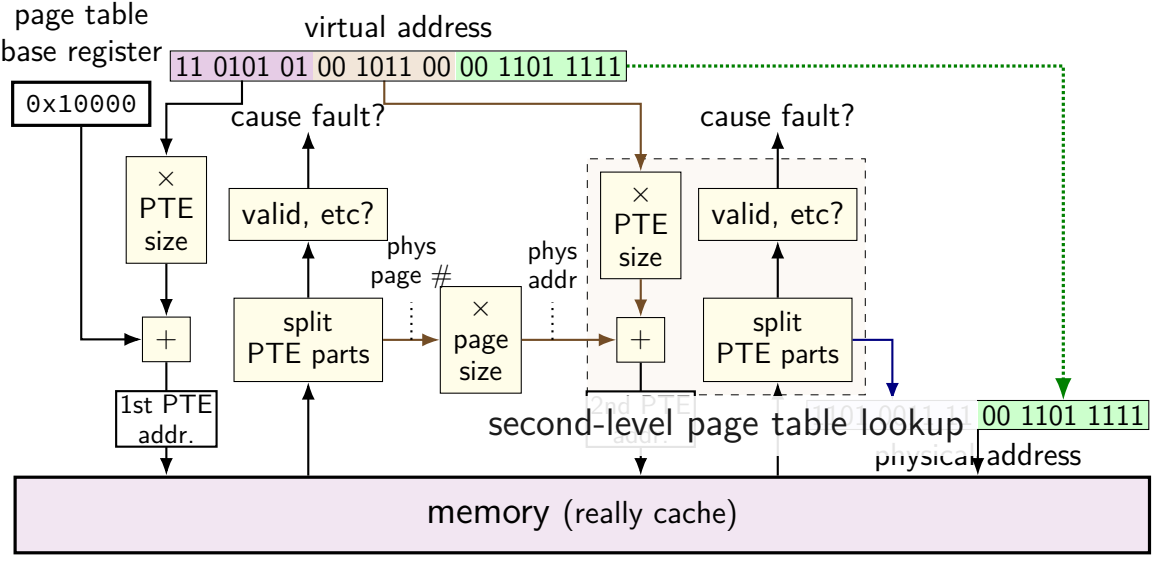

two-level page table lookup

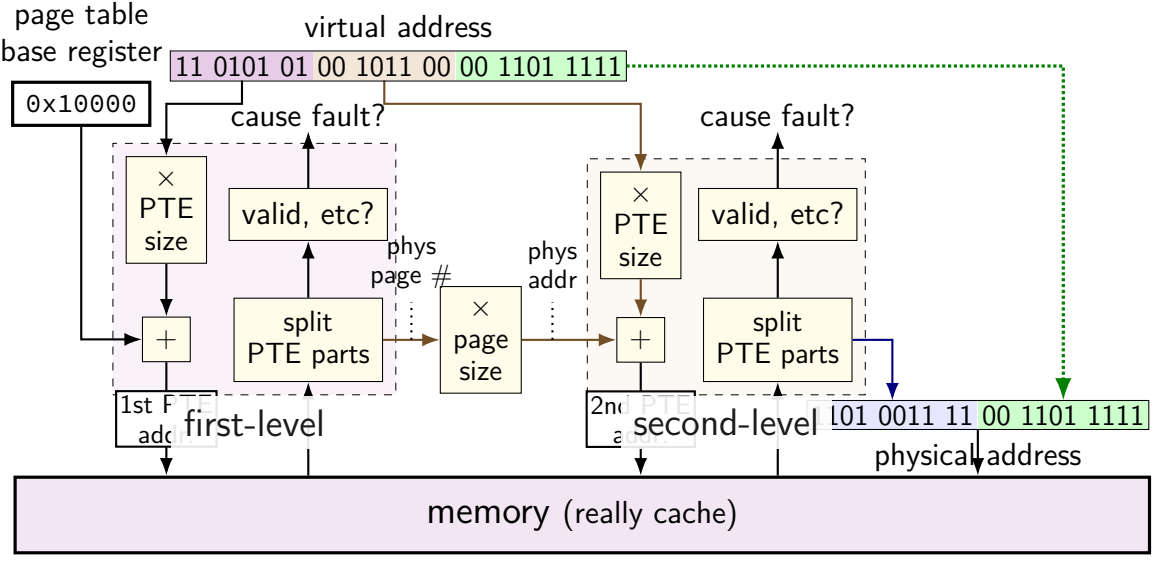

two-level page table lookup

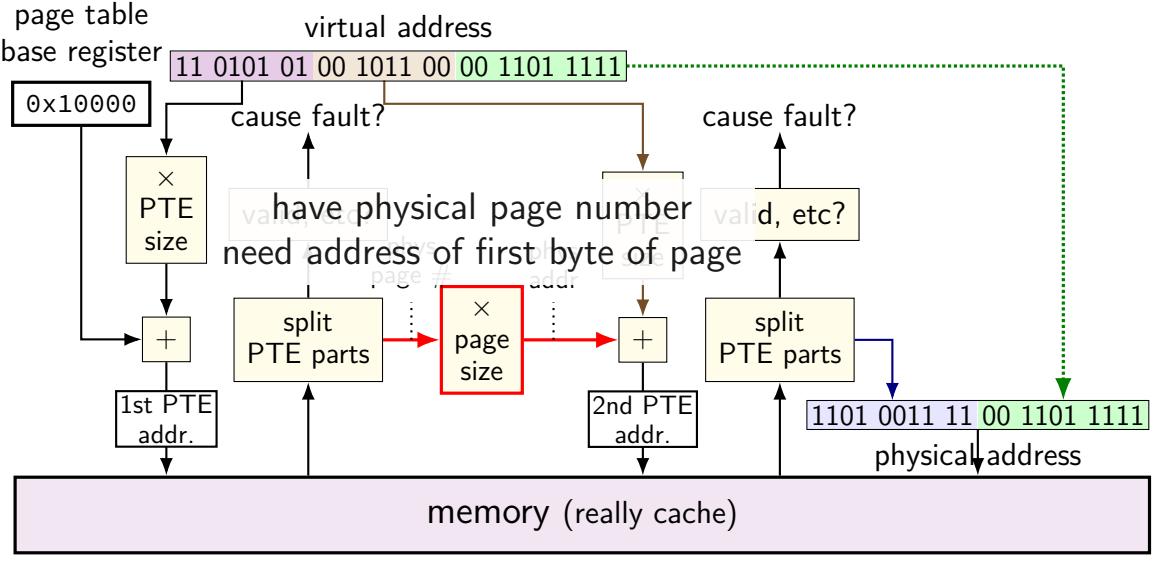

two-level page table lookup

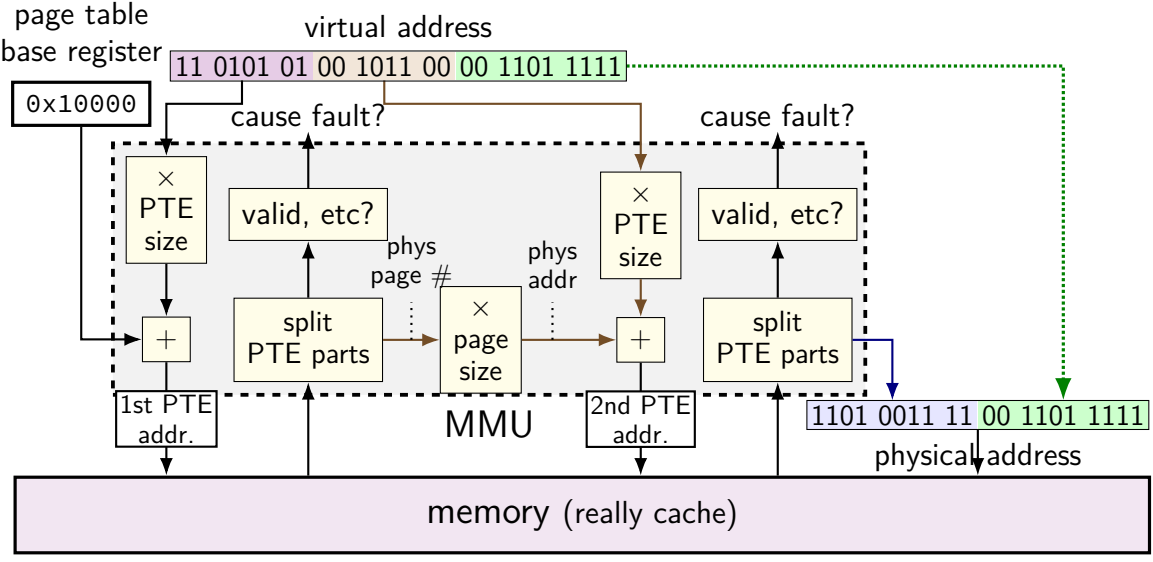

another view

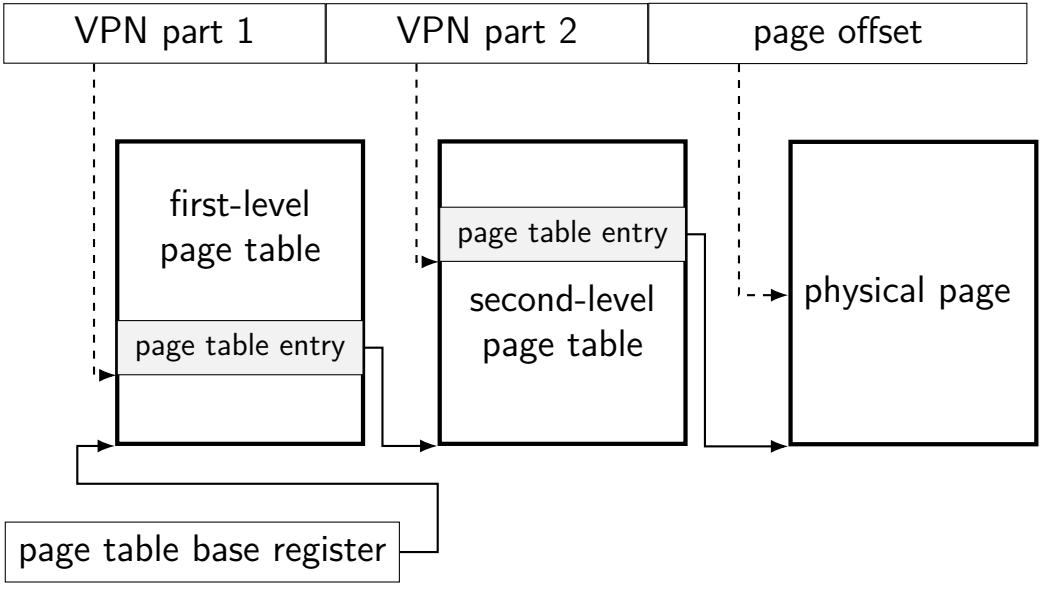

multi-level page tables

VPN split into pieces for each level of page table

top levels: page table entries point to next page table

usually using physical page number of next page table

bottom level: page table entry points to destination page

validity checks at each level

x86-64 page table splitting

48-bit virtual address

12-bit page offset (4KB pages)

36-bit virtual page number, split into four 9-bit parts

page tables at each level: 2^9 entries, 8 bytes/entry

deliberate choice: each page table is one page

note on VPN splitting

textbook labels it ‘VPN 1’ and ‘VPN 2’ and so on

these are parts of the virtual page number

(there are not multiple VPNs)

emacs (two copies)

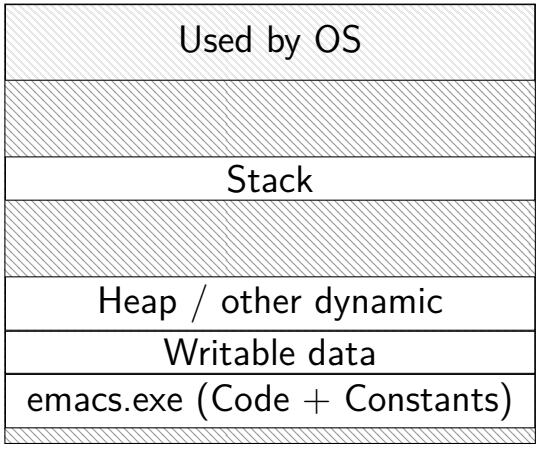

emacs (two copies)

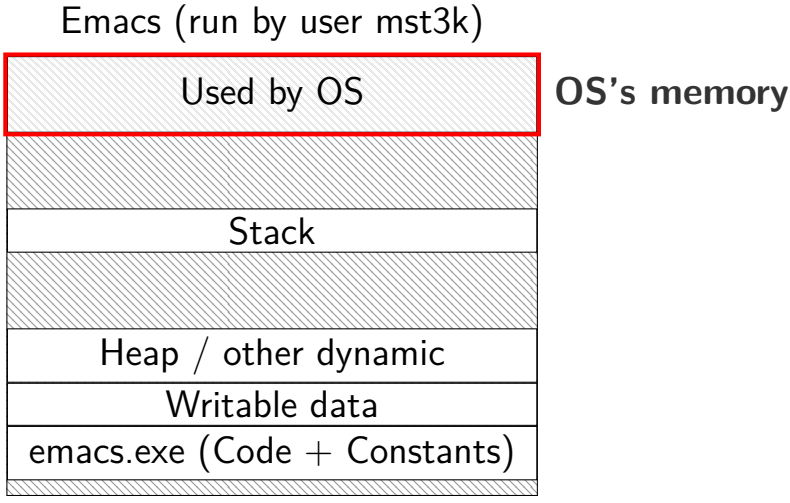

emacs (two copies)

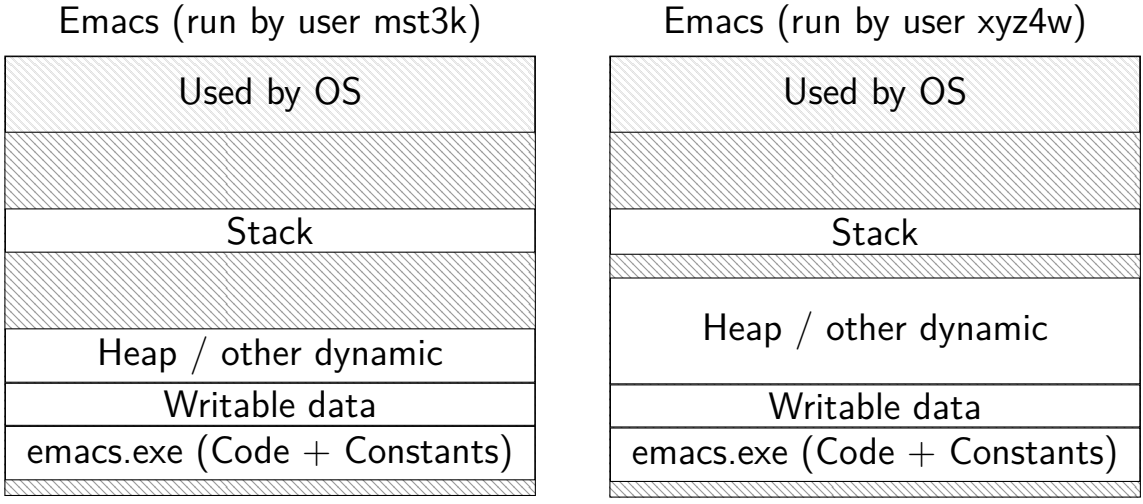

emacs (two copies)

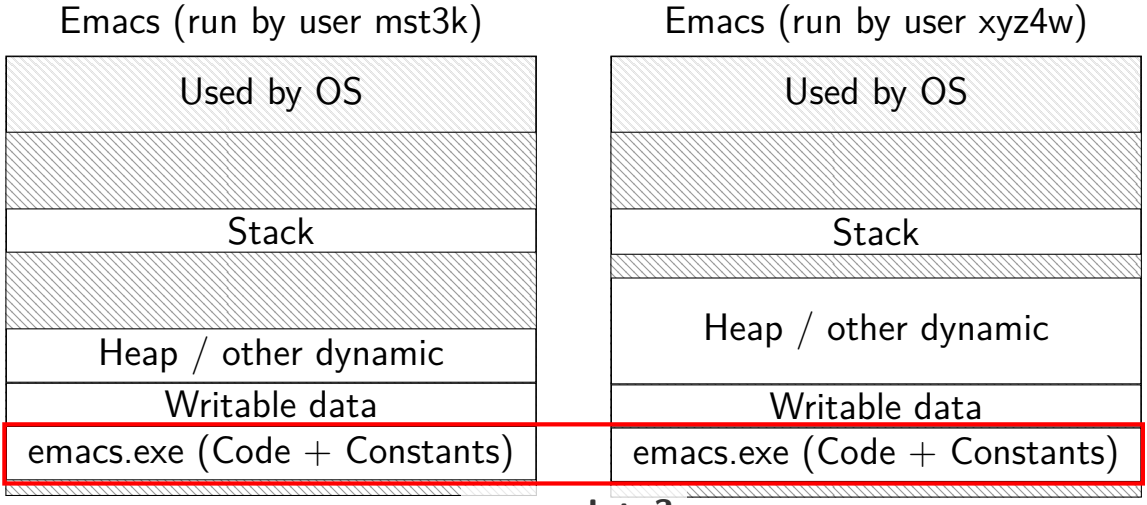

two copies of program

would like to only have one copy of program

what if `mst3k`'s emacs tries to modify its code?

would break process abstraction:

> "illusion of own memory"

permissions bits

page table entry will have more permissions bits

- can access in user mode?
- can read from?
- can write to?
- can execute from?

checked by MMU like valid bit

page table (logically)

virtual page #	valid?	user?	write?	exec?	physical page #
0000 0000	0	0	0	0	00 0000 0000
0000 0001	1	1	1	0	10 0010 0110
0000 0010	1	1	1	0	00 0000 1100
0000 0011	1	1	0	1	11 0000 0011
...					
1111 1111	1	0	1	0	00 1110 1000

assignment

2-level example

9-bit virtual addresses, 6-bit physical; 8 byte pages, 1 byte PTE

page tables 1 page; PTE: 3 bit PPN (MSB), 1 valid bit, 4 unused

page table base register `0x20`; translate virtual address `0x131`

physical addresses	bytes
0x00–3	00 11 22 33
0x04–7	44 55 66 77
0x08–B	88 99 AA BB
0x0C–F	CC DD EE FF
0x10–3	1A 2A 3A 4A
0x14–7	1B 2B 3B 4B
0x18–B	1C 2C 3C 4C
0x1C–F	1C 2C 3C 4C

physical addresses	bytes
0x20–3	D0 D1 D2 D3
0x24–7	D4 D5 D6 D7
0x28–B	89 9A AB BC
0x2C–F	CD DE EF F0
0x30–3	BA 0A BA 0A
0x34–7	DB 0B DB 0B
0x38–B	EC 0C EC 0C
0x3C–F	FC 0C FC 0C

2-level example

9-bit virtual addresses, 6-bit physical; 8 byte pages, 1 byte PTE

page tables 1 page; PTE: 3 bit PPN (MSB), 1 valid bit, 4 unused

page table base register `0x20`; translate virtual address `0x131`

physical addresses	bytes
0x00–3	00 11 22 33
0x04–7	44 55 66 77
0x08–B	88 99 AA BB
0x0C–F	CC DD EE FF
0x10–3	1A 2A 3A 4A
0x14–7	1B 2B 3B 4B
0x18–B	1C 2C 3C 4C
0x1C–F	1C 2C 3C 4C

physical addresses	bytes
0x20–3	D0 D1 D2 D3
0x24–7	D4 D5 D6 D7
0x28–B	89 9A AB BC
0x2C–F	CD DE EF F0
0x30–3	BA 0A BA 0A
0x34–7	DB 0B DB 0B
0x38–B	EC 0C EC 0C
0x3C–F	FC 0C FC 0C

2-level example

9-bit virtual addresses, 6-bit physical; 8 byte pages, 1 byte PTE

page tables 1 page; PTE: 3 bit PPN (MSB), 1 valid bit, 4 unused

page table base register `0x20`; translate virtual address `0x131`

physical addresses	bytes
0x00–3	00 11 22 33
0x04–7	44 55 66 77
0x08–B	88 99 AA BB
0x0C–F	CC DD EE FF
0x10–3	1A 2A 3A 4A
0x14–7	1B 2B 3B 4B
0x18–B	1C 2C 3C 4C
0x1C–F	1C 2C 3C 4C

physical addresses	bytes
0x20–3	D0 D1 D2 D3
0x24–7	D4 D5 D6 D7
0x28–B	89 9A AB BC
0x2C–F	CD DE EF F0
0x30–3	BA 0A BA 0A
0x34–7	DB 0B DB 0B
0x38–B	EC 0C EC 0C
0x3C–F	FC 0C FC 0C

2-level example

9-bit virtual addresses, 6-bit physical; 8 byte pages, 1 byte PTE

page tables 1 page; PTE: 3 bit PPN (MSB), 1 valid bit, 4 unused

page table base register `0x20`; translate virtual address `0x131`

physical addresses	bytes
0x00–3	00 11 22 33
0x04–7	44 55 66 77
0x08–B	88 99 AA BB
0x0C–F	CC DD EE FF
0x10–3	1A 2A 3A 4A
0x14–7	1B 2B 3B 4B
0x18–B	1C 2C 3C 4C
0x1C–F	1C 2C 3C 4C

physical addresses	bytes
0x20–3	D0 D1 D2 D3
0x24–7	D4 D5 D6 D7
0x28–B	89 9A AB BC
0x2C–F	CD DE EF F0
0x30–3	BA 0A BA 0A
0x34–7	DB 0B DB 0B
0x38–B	EC 0C EC 0C
0x3C–F	FC 0C FC 0C

2-level example

9-bit virtual addresses, 6-bit physical; 8 byte pages, 1 byte PTE

page tables 1 page; PTE: 3 bit PPN (MSB), 1 valid bit, 4 unused

page table base register `0x20`; translate virtual address `0x131`

physical addresses	bytes
0x00–3	00 11 22 33
0x04–7	44 55 66 77
0x08–B	88 99 AA BB
0x0C–F	CC DD EE FF
0x10–3	1A 2A 3A 4A
0x14–7	1B 2B 3B 4B
0x18–B	1C 2C 3C 4C
0x1C–F	1C 2C 3C 4C

physical addresses	bytes
0x20–3	D0 D1 D2 D3
0x24–7	D4 D5 D6 D7
0x28–B	89 9A AB BC
0x2C–F	CD DE EF F0
0x30–3	BA 0A BA 0A
0x34–7	DB 0B DB 0B
0x38–B	EC 0C EC 0C
0x3C–F	FC 0C FC 0C

2-level example

9-bit virtual addresses, 6-bit physical; 8 byte pages, 1 byte PTE

page tables 1 page; PTE: 3 bit PPN (MSB), 1 valid bit, 4 unused

page table base register `0x20`; translate virtual address `0x131`

physical addresses	bytes
0x00–3	00 11 22 33
0x04–7	44 55 66 77
0x08–B	88 99 AA BB
0x0C–F	CC DD EE FF
0x10–3	1A 2A 3A 4A
0x14–7	1B 2B 3B 4B
0x18–B	1C 2C 3C 4C
0x1C–F	1C 2C 3C 4C

physical addresses	bytes
0x20–3	D0 D1 D2 D3
0x24–7	D4 D5 D6 D7
0x28–B	89 9A AB BC
0x2C–F	CD DE EF F0
0x30–3	BA 0A BA 0A
0x34–7	DB 0B DB 0B
0x38–B	EC 0C EC 0C
0x3C–F	FC 0C FC 0C

2-level splitting

9-bit virtual address

6-bit physical address

8-byte pages $\rightarrow$ 3-bit page offset (bottom bits)

9-bit VA: 6 bit VPN + 3 bit PO

6-bit PA: 3 bit PPN + 3 bit PO

8 entry page tables $\rightarrow$ 3-bit VPN parts

9-bit VA: 3 bit VPN part 1; 3 bit VPN part 2

2-level exercise (1)

9-bit virtual addresses, 6-bit physical; 8 byte pages, 1 byte PTE

page tables 1 page; PTE: 3 bit PPN (MSB), 1 valid bit, 4 unused;

page table base register `0x08`; translate virtual address `0x0FB`

physical addresses	bytes
0x00–3	00 11 22 33
0x04–7	44 55 66 77
0x08–B	88 99 AA BB
0x0C–F	CC DD EE FF
0x10–3	1A 2A 3A 4A
0x14–7	1B 2B 3B 4B
0x18–B	1C 2C 3C 4C
0x1C–F	1C 2C 3C 4C

physical addresses	bytes
0x20–3	D0 D1 D2 D3
0x24–7	D4 D5 D6 D7
0x28–B	89 9A AB BC
0x2C–F	CD DE EF F0
0x30–3	BA 0A BA 0A
0x34–7	DB 0B DB 0B
0x38–B	EC 0C EC 0C
0x3C–F	FC 0C FC 0C

2-level exercise (1)

9-bit virtual addresses, 6-bit physical; 8 byte pages, 1 byte PTE

page tables 1 page; PTE: 3 bit PPN (MSB), 1 valid bit, 4 unused;

page table base register `0x08`; translate virtual address `0x0FB`

physical addresses	bytes
0x00–3	00 11 22 33
0x04–7	44 55 66 77
0x08–B	88 99 AA BB
0x0C–F	CC DD EE FF
0x10–3	1A 2A 3A 4A
0x14–7	1B 2B 3B 4B
0x18–B	1C 2C 3C 4C
0x1C–F	1C 2C 3C 4C

physical addresses	bytes
0x20–3	D0 D1 D2 D3
0x24–7	D4 D5 D6 D7
0x28–B	89 9A AB BC
0x2C–F	CD DE EF F0
0x30–3	BA 0A BA 0A
0x34–7	DB 0B DB 0B
0x38–B	EC 0C EC 0C
0x3C–F	FC 0C FC 0C

2-level exercise (1)

9-bit virtual addresses, 6-bit physical; 8 byte pages, 1 byte PTE

page tables 1 page; PTE: 3 bit PPN (MSB), 1 valid bit, 4 unused;

page table base register `0x08`; translate virtual address `0x0FB`

physical addresses	bytes
0x00–3	00 11 22 33
0x04–7	44 55 66 77
0x08–B	88 99 AA BB
0x0C–F	CC DD EE FF
0x10–3	1A 2A 3A 4A
0x14–7	1B 2B 3B 4B
0x18–B	1C 2C 3C 4C
0x1C–F	1C 2C 3C 4C

physical addresses	bytes
0x20–3	D0 D1 D2 D3
0x24–7	D4 D5 D6 D7
0x28–B	89 9A AB BC
0x2C–F	CD DE EF F0
0x30–3	BA 0A BA 0A
0x34–7	DB 0B DB 0B
0x38–B	EC 0C EC 0C
0x3C–F	FC 0C FC 0C

2-level exercise (1)

9-bit virtual addresses, 6-bit physical; 8 byte pages, 1 byte PTE

page tables 1 page; PTE: 3 bit PPN (MSB), 1 valid bit, 4 unused;

page table base register `0x08`; translate virtual address `0x0FB`

physical addresses	bytes
0x00–3	00 11 22 33
0x04–7	44 55 66 77
0x08–B	88 99 AA BB
0x0C–F	CC DD EE FF
0x10–3	1A 2A 3A 4A
0x14–7	1B 2B 3B 4B
0x18–B	1C 2C 3C 4C
0x1C–F	1C 2C 3C 4C

physical addresses	bytes
0x20–3	D0 D1 D2 D3
0x24–7	D4 D5 D6 D7
0x28–B	89 9A AB BC
0x2C–F	CD DE EF F0
0x30–3	BA 0A BA 0A
0x34–7	DB 0B DB 0B
0x38–B	EC 0C EC 0C
0x3C–F	FC 0C FC 0C

2-level exercise (1)

9-bit virtual addresses, 6-bit physical; 8 byte pages, 1 byte PTE

page tables 1 page; PTE: 3 bit PPN (MSB), 1 valid bit, 4 unused;

page table base register `0x08`; translate virtual address `0x0FB`

physical addresses	bytes
0x00–3	00 11 22 33
0x04–7	44 55 66 77
0x08–B	88 99 AA BB
0x0C–F	CC DD EE FF
0x10–3	1A 2A 3A 4A
0x14–7	1B 2B 3B 4B
0x18–B	1C 2C 3C 4C
0x1C–F	1C 2C 3C 4C

physical addresses	bytes
0x20–3	D0 D1 D2 D3
0x24–7	D4 D5 D6 D7
0x28–B	89 9A AB BC
0x2C–F	CD DE EF F0
0x30–3	BA 0A BA 0A
0x34–7	DB 0B DB 0B
0x38–B	EC 0C EC 0C
0x3C–F	FC 0C FC 0C

2-level exercise (2)

9-bit virtual addresses, 6-bit physical; 8 byte pages, 1 byte PTE

page tables 1 page; PTE: 3 bit PPN (MSB), 1 valid bit, 4 unused;

page table base register `0x10`; translate virtual address `0x109`

physical addresses	bytes
0x00–3	00 11 22 33
0x04–7	44 55 66 77
0x08–B	88 99 AA BB
0x0C–F	CC DD EE FF
0x10–3	1A 2A 5A 4A
0x14–7	1B 2B 3B 4B
0x18–B	1C 2C 3C 4C
0x1C–F	1C 2C 3C 4C

physical addresses	bytes
0x20–3	D0 D1 D2 D3
0x24–7	D4 D5 D6 D7
0x28–B	89 9A AB BC
0x2C–F	CD DE EF F0
0x30–3	BA 0A BA 0A
0x34–7	DB 0B DB 0B
0x38–B	EC 0C EC 0C
0x3C–F	FC 0C FC 0C

2-level exercise (3)

9-bit virtual addresses, 6-bit physical; 8 byte pages, 1 byte PTE

page tables 1 page; PTE: 3 bit PPN (MSB), 1 valid bit, 4 unused

page table base register `0x08`; translate virtual address `0x00B`

physical addresses	bytes
0x00–3	00 11 22 33
0x04–7	44 55 66 77
0x08–B	88 99 AA BB
0x0C–F	CC DD EE FF
0x10–3	1A 2A 3A 4A
0x14–7	1B 2B 3B 4B
0x18–B	1C 2C 3C 4C
0x1C–F	1C 2C 3C 4C

physical addresses	bytes
0x20–3	D0 D1 D2 D3
0x24–7	D4 D5 D6 D7
0x28–B	89 9A AB BC
0x2C–F	CD DE EF F0
0x30–3	BA 0A BA 0A
0x34–7	DB 0B DB 0B
0x38–B	EC 0C EC 0C
0x3C–F	FC 0C FC 0C

2-level exercise (3)

9-bit virtual addresses, 6-bit physical; 8 byte pages, 1 byte PTE

page tables 1 page; PTE: 3 bit PPN (MSB), 1 valid bit, 4 unused

page table base register `0x08`; translate virtual address `0x00B`

physical addresses	bytes
0x00–3	00 11 22 33
0x04–7	44 55 66 77
0x08–B	88 99 AA BB
0x0C–F	CC DD EE FF
0x10–3	1A 2A 3A 4A
0x14–7	1B 2B 3B 4B
0x18–B	1C 2C 3C 4C
0x1C–F	1C 2C 3C 4C

physical addresses	bytes
0x20–3	D0 D1 D2 D3
0x24–7	D4 D5 D6 D7
0x28–B	89 9A AB BC
0x2C–F	CD DE EF F0
0x30–3	BA 0A BA 0A
0x34–7	DB 0B DB 0B
0x38–B	EC 0C EC 0C
0x3C–F	FC 0C FC 0C

2-level exercise (3)

9-bit virtual addresses, 6-bit physical; 8 byte pages, 1 byte PTE

page tables 1 page; PTE: 3 bit PPN (MSB), 1 valid bit, 4 unused

page table base register `0x08`; translate virtual address `0x00B`

physical addresses	bytes
0x00–3	00 11 22 33
0x04–7	44 55 66 77
0x08–B	88 99 AA BB
0x0C–F	CC DD EE FF
0x10–3	1A 2A 3A 4A
0x14–7	1B 2B 3B 4B
0x18–B	1C 2C 3C 4C
0x1C–F	1C 2C 3C 4C

physical addresses	bytes
0x20–3	D0 D1 D2 D3
0x24–7	D4 D5 D6 D7
0x28–B	89 9A AB BC
0x2C–F	CD DE EF F0
0x30–3	BA 0A BA 0A
0x34–7	DB 0B DB 0B
0x38–B	EC 0C EC 0C
0x3C–F	FC 0C FC 0C

2-level exercise (4)

9-bit virtual addresses, 6-bit physical; 8 byte pages, 1 byte PTE

page tables 1 page; PTE: 3 bit PPN (MSB), 1 valid bit, 4 unused

page table base register `0x08`; translate virtual address `0x1CB`

physical addresses	bytes
0x00–3	00 11 22 33
0x04–7	44 55 66 77
0x08–B	88 99 AA BB
0x0C–F	CC DD EE FF
0x10–3	1A 2A 3A 4A
0x14–7	1B 2B 3B 4B
0x18–B	1C 2C 3C 4C
0x1C–F	1C 2C 3C 4C

physical addresses	bytes
0x20–3	D0 D1 D2 D3
0x24–7	D4 D5 D6 D7
0x28–B	89 9A AB BC
0x2C–F	CD DE EF F0
0x30–3	BA 0A BA 0A
0x34–7	DB 0B DB 0B
0x38–B	EC 0C EC 0C
0x3C–F	FC 0C FC 0C

2-level exercise (5)

10-bit virtual addresses, 6-bit physical; 16 byte pages, 2 byte PTE

page tables 1 page; PTE: 2 bit PPN (MSB of first byte), 1 valid bit, rest unused

page table base register `0x10`; translate virtual address `0x376`

physical addresses	bytes
0x00–3	00 11 22 33
0x04–7	44 55 66 77
0x08–B	88 99 AA BB
0x0C–F	CC DD EE FF
0x10–3	1A 2A 3A 4A
0x14–7	1B 2B 3B 4B
0x18–B	1C 2C 3C 4C
0x1C–F	AC BC DC EC

physical addresses	bytes
0x20–3	D0 E1 D2 D3
0x24–7	D4 E5 D6 E7
0x28–B	89 9A AB BC
0x2C–F	CD DE EF F0
0x30–3	BA 0A BA 0A
0x34–7	DB 0B DB 0B
0x38–B	EC 0C EC 0C
0x3C–F	FC 0C FC 0C

2-level exercise (5)

10-bit virtual addresses, 6-bit physical; 16 byte pages, 2 byte PTE

page tables 1 page; PTE: 2 bit PPN (MSB of first byte), 1 valid bit, rest unused

page table base register `0x10`; translate virtual address `0x376`

physical addresses	bytes
0x00–3	00 11 22 33
0x04–7	44 55 66 77
0x08–B	88 99 AA BB
0x0C–F	CC DD EE FF
0x10–3	1A 2A 3A 4A
0x14–7	1B 2B 3B 4B
0x18–B	1C 2C 3C 4C
0x1C–F	AC BC DC EC

physical addresses	bytes
0x20–3	D0 E1 D2 D3
0x24–7	D4 E5 D6 E7
0x28–B	89 9A AB BC
0x2C–F	CD DE EF F0
0x30–3	BA 0A BA 0A
0x34–7	DB 0B DB 0B
0x38–B	EC 0C EC 0C
0x3C–F	FC 0C FC 0C

2-level exercise (5)

10-bit virtual addresses, 6-bit physical; 16 byte pages, 2 byte PTE

page tables 1 page; PTE: 2 bit PPN (MSB of first byte), 1 valid bit, rest unused

page table base register `0x10`; translate virtual address `0x376`

physical addresses	bytes
0x00–3	00 11 22 33
0x04–7	44 55 66 77
0x08–B	88 99 AA BB
0x0C–F	CC DD EE FF
0x10–3	1A 2A 3A 4A
0x14–7	1B 2B 3B 4B
0x18–B	1C 2C 3C 4C
0x1C–F	AC BC DC EC

physical addresses	bytes
0x20–3	D0 E1 D2 D3
0x24–7	D4 E5 D6 E7
0x28–B	89 9A AB BC
0x2C–F	CD DE EF F0
0x30–3	BA 0A BA 0A
0x34–7	DB 0B DB 0B
0x38–B	EC 0C EC 0C
0x3C–F	FC 0C FC 0C

2-level exercise (5)

10-bit virtual addresses, 6-bit physical; 16 byte pages, 2 byte PTE

page tables 1 page; PTE: 2 bit PPN (MSB of first byte), 1 valid bit, rest unused

page table base register `0x10`; translate virtual address `0x376`

physical addresses	bytes
0x00–3	00 11 22 33
0x04–7	44 55 66 77
0x08–B	88 99 AA BB
0x0C–F	CC DD EE FF
0x10–3	1A 2A 3A 4A
0x14–7	1B 2B 3B 4B
0x18–B	1C 2C 3C 4C
0x1C–F	AC BC DC EC

physical addresses	bytes
0x20–3	D0 E1 D2 D3
0x24–7	D4 E5 D6 E7
0x28–B	89 9A AB BC
0x2C–F	CD DE EF F0
0x30–3	BA 0A BA 0A
0x34–7	DB 0B DB 0B
0x38–B	EC 0C EC 0C
0x3C–F	FC 0C FC 0C

2-level exercise (5)

10-bit virtual addresses, 6-bit physical; 16 byte pages, 2 byte PTE

page tables 1 page; PTE: 2 bit PPN (MSB of first byte), 1 valid bit, rest unused

page table base register `0x10`; translate virtual address `0x376`

physical addresses	bytes
0x00–3	00 11 22 33
0x04–7	44 55 66 77
0x08–B	88 99 AA BB
0x0C–F	CC DD EE FF
0x10–3	1A 2A 3A 4A
0x14–7	1B 2B 3B 4B
0x18–B	1C 2C 3C 4C
0x1C–F	AC BC DC EC

physical addresses	bytes
0x20–3	D0 E1 D2 D3
0x24–7	D4 E5 D6 E7
0x28–B	89 9A AB BC
0x2C–F	CD DE EF F0
0x30–3	BA 0A BA 0A
0x34–7	DB 0B DB 0B
0x38–B	EC 0C EC 0C
0x3C–F	FC 0C FC 0C

2-level exercise (5)

10-bit virtual addresses, 6-bit physical; 16 byte pages, 2 byte PTE

page tables 1 page; PTE: 2 bit PPN (MSB of first byte), 1 valid bit, rest unused

page table base register `0x10`; translate virtual address `0x376`

physical addresses	bytes
0x00–3	00 11 22 33
0x04–7	44 55 66 77
0x08–B	88 99 AA BB
0x0C–F	CC DD EE FF
0x10–3	1A 2A 3A 4A
0x14–7	1B 2B 3B 4B
0x18–B	1C 2C 3C 4C
0x1C–F	AC BC DC EC

physical addresses	bytes
0x20–3	D0 E1 D2 D3
0x24–7	D4 E5 D6 E7
0x28–B	89 9A AB BC
0x2C–F	CD DE EF F0
0x30–3	BA 0A BA 0A
0x34–7	DB 0B DB 0B
0x38–B	EC 0C EC 0C
0x3C–F	FC 0C FC 0C

2-level exercise (5)

10-bit virtual addresses, 6-bit physical; 16 byte pages, 2 byte PTE

page tables 1 page; PTE: 2 bit PPN (MSB of first byte), 1 valid bit, rest unused

page table base register `0x10`; translate virtual address `0x376`

physical addresses	bytes
0x00–3	00 11 22 33
0x04–7	44 55 66 77
0x08–B	88 99 AA BB
0x0C–F	CC DD EE FF
0x10–3	1A 2A 3A 4A
0x14–7	1B 2B 3B 4B
0x18–B	1C 2C 3C 4C
0x1C–F	AC BC DC EC

physical addresses	bytes
0x20–3	D0 E1 D2 D3
0x24–7	D4 E5 D6 E7
0x28–B	89 9A AB BC
0x2C–F	CD DE EF F0
0x30–3	BA 0A BA 0A
0x34–7	DB 0B DB 0B
0x38–B	EC 0C EC 0C
0x3C–F	FC 0C FC 0C

2-level exercise (5)

10-bit virtual addresses, 6-bit physical; 16 byte pages, 2 byte PTE

page tables 1 page; PTE: 2 bit PPN (MSB of first byte), 1 valid bit, rest unused

page table base register `0x10`; translate virtual address `0x376`

physical addresses	bytes
0x00–3	00 11 22 33
0x04–7	44 55 66 77
0x08–B	88 99 AA BB
0x0C–F	CC DD EE FF
0x10–3	1A 2A 3A 4A
0x14–7	1B 2B 3B 4B
0x18–B	1C 2C 3C 4C
0x1C–F	AC BC DC EC

physical addresses	bytes
0x20–3	D0 E1 D2 D3
0x24–7	D4 E5 D6 E7
0x28–B	89 9A AB BC
0x2C–F	CD DE EF F0
0x30–3	BA 0A BA 0A
0x34–7	DB 0B DB 0B
0x38–B	EC 0C EC 0C
0x3C–F	FC 0C FC 0C

space on demand

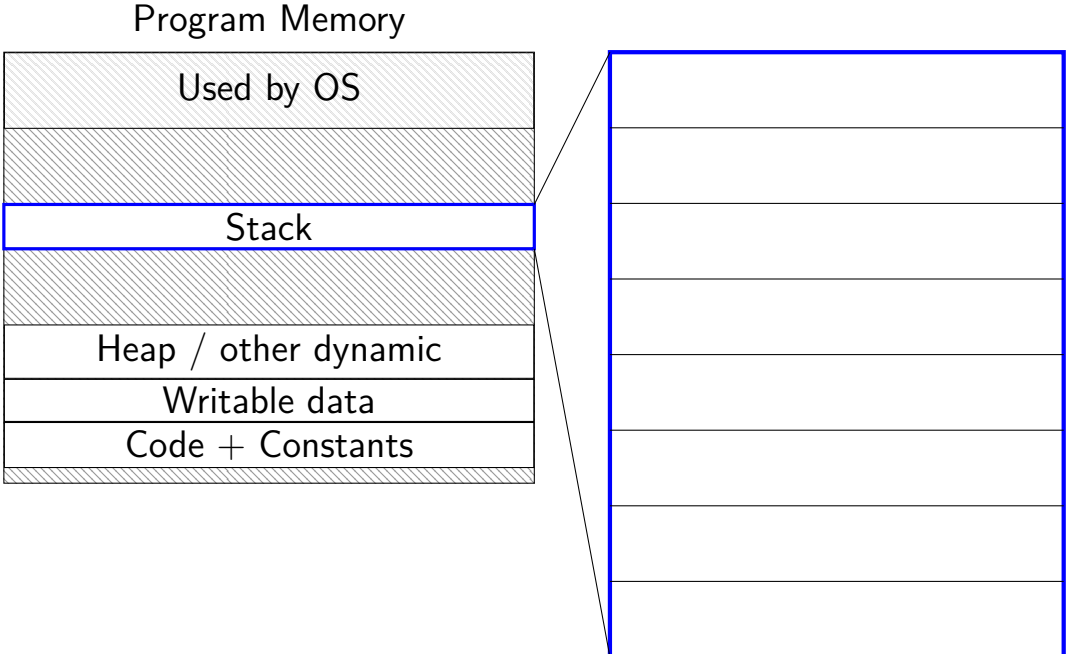

space on demand

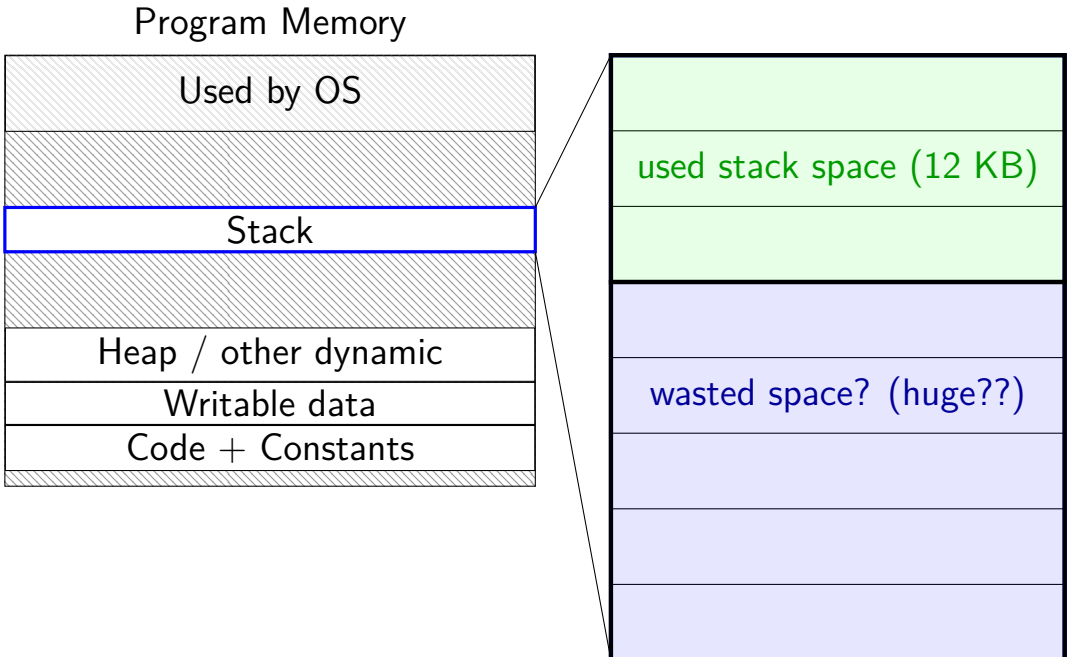

space on demand

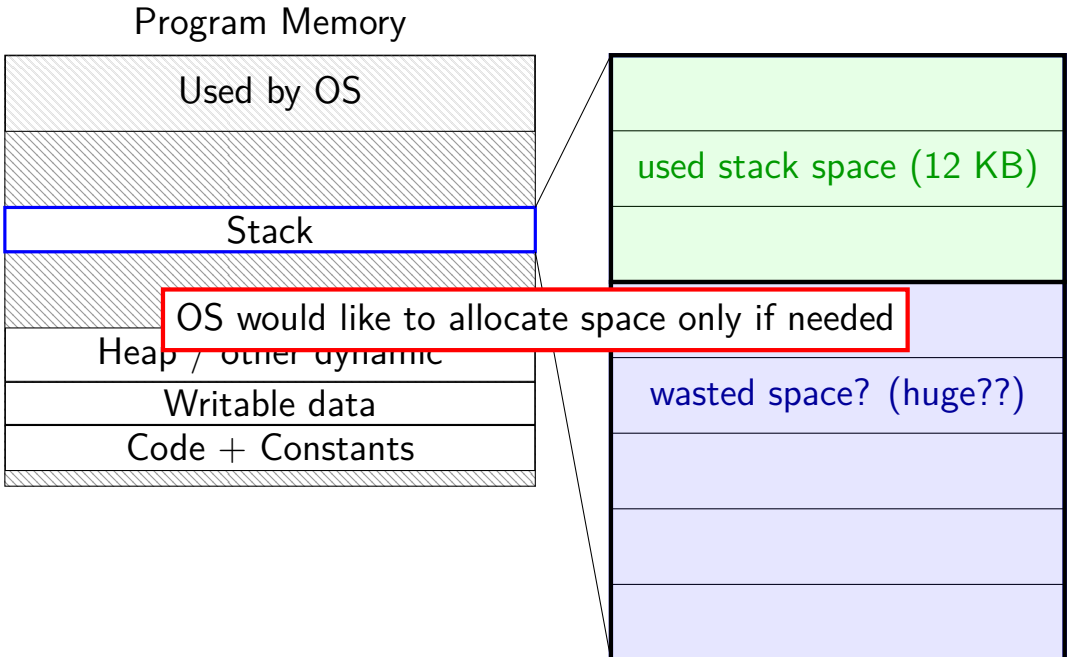

allocating space on demand

`%rsp = 0x7FFFC000`

```
...
// requires more stack space
A: pushq %rbx

B: movq 8(%rcx), %rbx
C: addq %rbx, %rax
...
```

VPN	valid?	physical page
…	…	…
0x7FFFB	0	---
0x7FFFC	1	0x200DF
0x7FFFD	1	0x12340
0x7FFFE	1	0x12347
0x7FFFF	1	0x12345
…	…	…

allocating space on demand

`%rsp = 0x7FFFC000`

```
...
// requires more stack space
A: pushq %rbx
```

page fault!

```
B: movq 8(%rcx), %rbx
C: addq %rbx, %rax
...
```

VPN	valid?	physical page
…	…	…
0x7FFFB	0	---
0x7FFFC	1	0x200DF
0x7FFFD	1	0x12340
0x7FFFE	1	0x12347
0x7FFFF	1	0x12345
…	…	…

pushq triggers exception
hardware says "accessing address `0x7FFFBFF8`"
OS looks up what's should be there — "stack"

allocating space on demand

`%rsp = 0x7FFFC000`

```
...
// requires more stack space
A: pushq %rbx
B: movq 8(%rcx), %rbx
C: addq %rbx, %rax
...
```

restarted

VPN	valid?	physical page
…	…	…
0x7FFFB	1	0x200D8
0x7FFFC	1	0x200DF
0x7FFFD	1	0x12340
0x7FFFE	1	0x12347
0x7FFFF	1	0x12345
…	…	…

in exception handler, OS allocates more stack space
OS updates the page table
then returns to retry the instruction

allocating space on demand

note: the space doesn't have to be initially empty

only change: load from file, etc. instead of allocating empty page

loading program can be merely creating empty page table

everything else can be handled in response to page faults

no time/space spent loading/allocating unneeded space

mmap

Linux/Unix has a function to “map” a file to memory

```
int file = open("somefile.dat", O_RDWR);

    // data is region of memory that represents file
char *data = mmap(..., file, 0);

    // read byte 6 from somefile.dat
char seventh_char = data[6];

   // modifies byte 100 of somefile.dat
data[100] = 'x';
    // can continue to use 'data' like an array
```

swapping almost mmap

access mapped file for first time, read from disk

(like swapping when memory was swapped out)

write "mapped" memory, write to disk eventually

(like writeback policy in swapping)

use "dirty" bit

extra detail: other processes should see changes

all accesses to file use same physical memory

Linux maps: list of maps

```
$ cat /proc/self/maps
00400000-0040b000 r-xp 00000000 08:01 48328831                           /bin/cat
0060a000-0060b000 r--p 0000a000 08:01 48328831                           /bin/cat
0060b000-0060c000 rw-p 0000b000 08:01 48328831                           /bin/cat
01974000-01995000 rw-p 00000000 00:00 0                                  [heap]
7f60c718b000-7f60c7490000 r--p 00000000 08:01 77483660                   /usr/lib/locale/locale-archive
7f60c74900
7f60c764e0
7f60c784e0
7f60c78520
7f60c78540
7f60c78590
7f60c7a390
7f60c7a7a0
7f60c7a7b0
7f60c7a7c0
7f60c7a7d0
7ffc5d2b20
7ffc5d3b00
7ffc5d3b30
ffffffffff
```

OS tracks list of `struct vm_area_struct` with:
(shown in this output):

- virtual address start, end
- permissions
- offset in backing file (if any)
- pointer to backing file (if any)

(not shown):

- info about sharing of non-file data ...

page tricks generally

deliberately make program trigger page/protection fault

but don't assume page/protection fault is an error

have seperate data structures represent logically allocated memory

e.g. "addresses `0x7FFF8000` to `0x7FFFFFFF` are the stack"

page table is for the hardware and not the OS

hardware help for page table tricks

information about the address causing the fault

- e.g. special register with memory address accessed
- harder alternative: OS disassembles instruction, look at registers

(by default) rerun faulting instruction when returning from exception

precise exceptions: no side effects from faulting instruction or after

- e.g. `pushq` that caused did not change `%rsp` before fault
- e.g. instructions reordered after faulting instruction not visible

swapping

early motivation for virtual memory: swapping

using disk (or SSD, ...) as the next level of the memory hierarchy

- how our textbook and many other sources presents virtual memory

OS allocates program space on disk

- own mapping of virtual addresses to location on disk

DRAM is a cache for disk

swapping

early motivation for virtual memory: swapping

using disk (or SSD, ...) as the next level of the memory hierarchy

- how our textbook and many other sources presents virtual memory

OS allocates program space on disk

- own mapping of virtual addresses to location on disk

DRAM is a cache for disk

swapping versus caching

"cache block" $\approx$ physical page

fully associative

- every virtual page can be stored in any physical page

replacement/cache misses managed by the OS

normal cache hits happen in hardware

- hardware's page table lookup
- common case that needs to be very fast

swapping components

"swap in" a page — exactly like allocating on demand!

- OS gets page fault — invalid in page table
- check where page actually is (from virtual address)
- read from disk
- eventually restart process

"swap out" a page

- OS marks as invalid in the page table(s)
- copy to disk (if modified)

HDD/SDDs are slow

HDD reads and writes: milliseconds to tens of milliseconds

- minimum size: 512 bytes
- writing tens of kilobytes basically as fast as writing 512 bytes

SSD writes and writes: hundreds of microseconds

- designed for writes/reads of kilobytes (not much smaller)

HDD/SDDs are slow

HDD reads and writes: milliseconds to tens of milliseconds

- minimum size: 512 bytes
- writing tens of kilobytes basically as fast as writing 512 bytes

SSD writes and writes: hundreds of microseconds

- designed for writes/reads of kilobytes (not much smaller)

HDD/SDDs are slow

HDD reads and writes: milliseconds to tens of milliseconds

- minimum size: 512 bytes
- writing tens of kilobytes basically as fast as writing 512 bytes

SSD writes and writes: hundreds of microseconds

- designed for writes/reads of kilobytes (not much smaller)

HDD/SDDs are slow

HDD reads and writes: milliseconds to tens of milliseconds

- minimum size: 512 bytes
- writing tens of kilobytes basically as fast as writing 512 bytes

SSD writes and writes: hundreds of microseconds

- designed for writes/reads of kilobytes (not much smaller)

swapping timeline

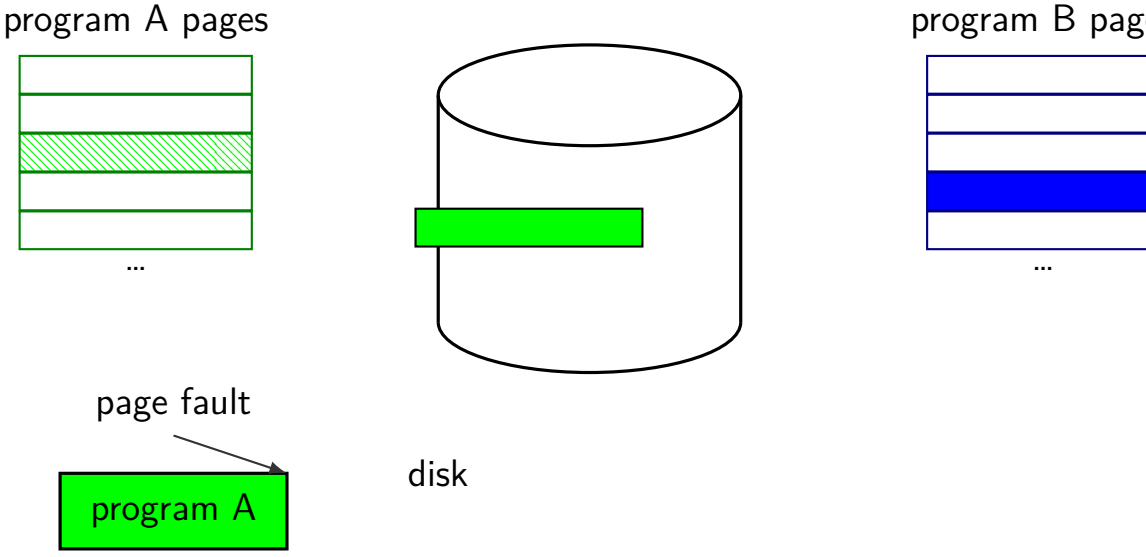

swapping timeline

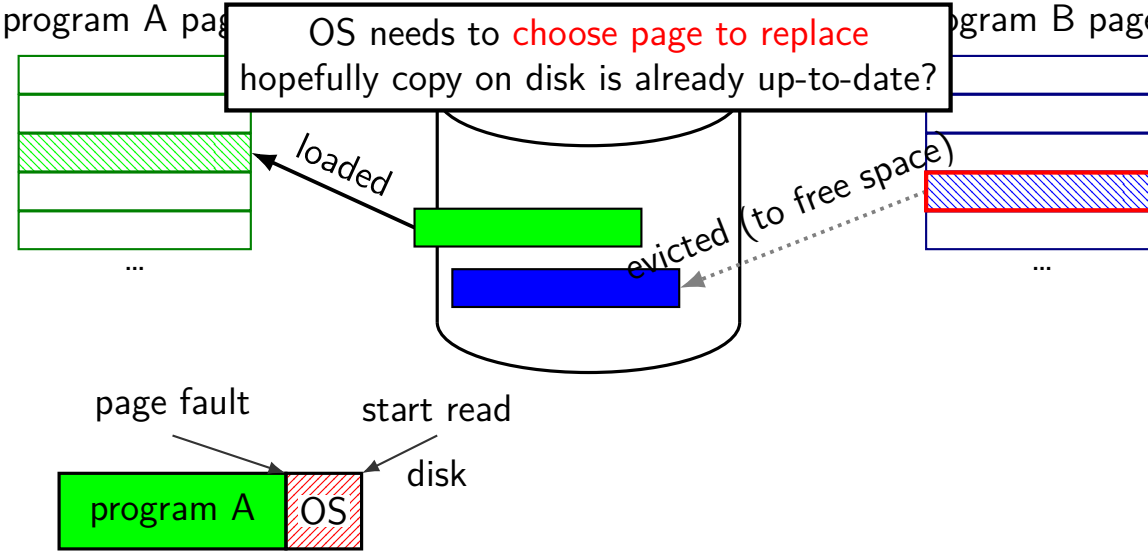

swapping timeline

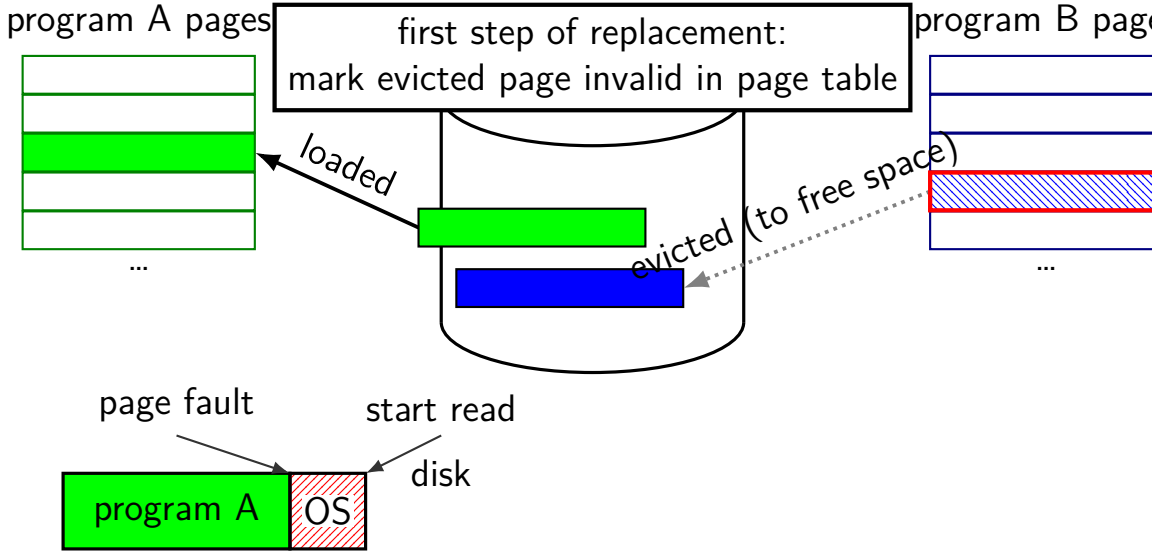

swapping timeline

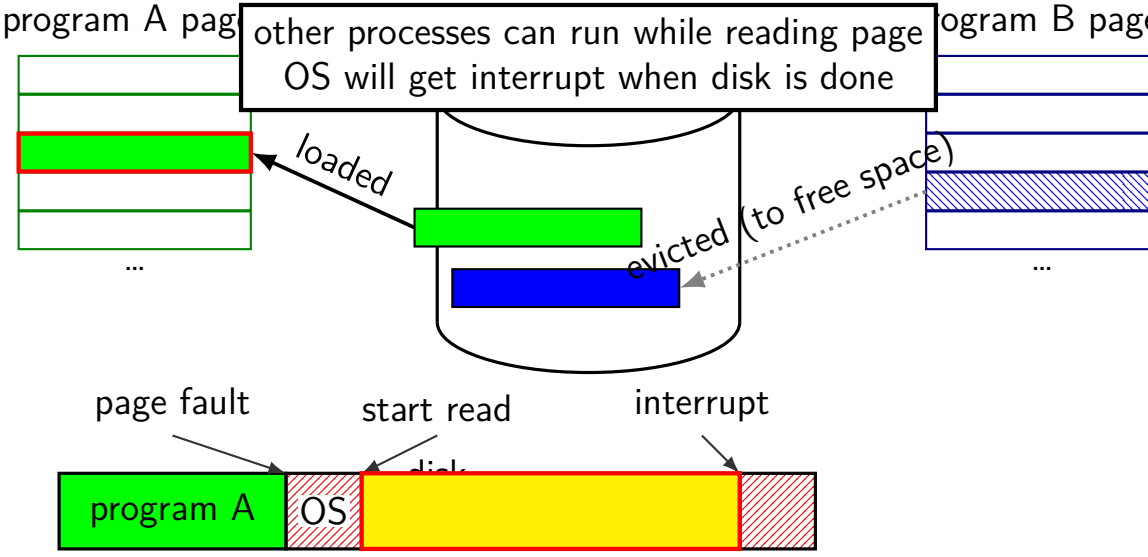

swapping timeline

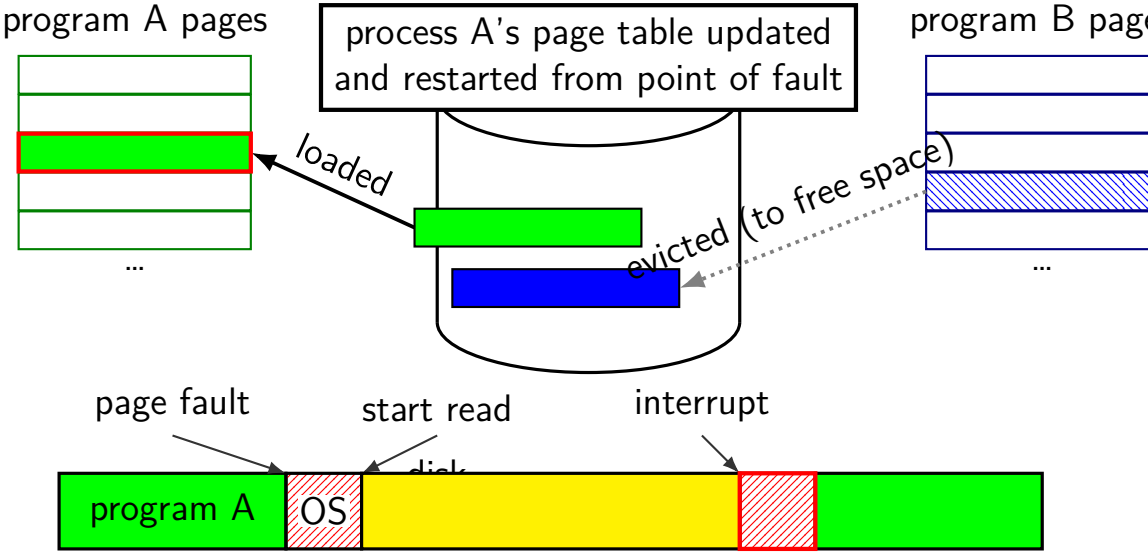

fast copies

Unix mechanism for starting a new process: `fork()`

creates a copy of an entire program!

(usually, the copy then calls `execve` — replaces itself with another program)

how isn't this really slow?

do we really need a complete copy?

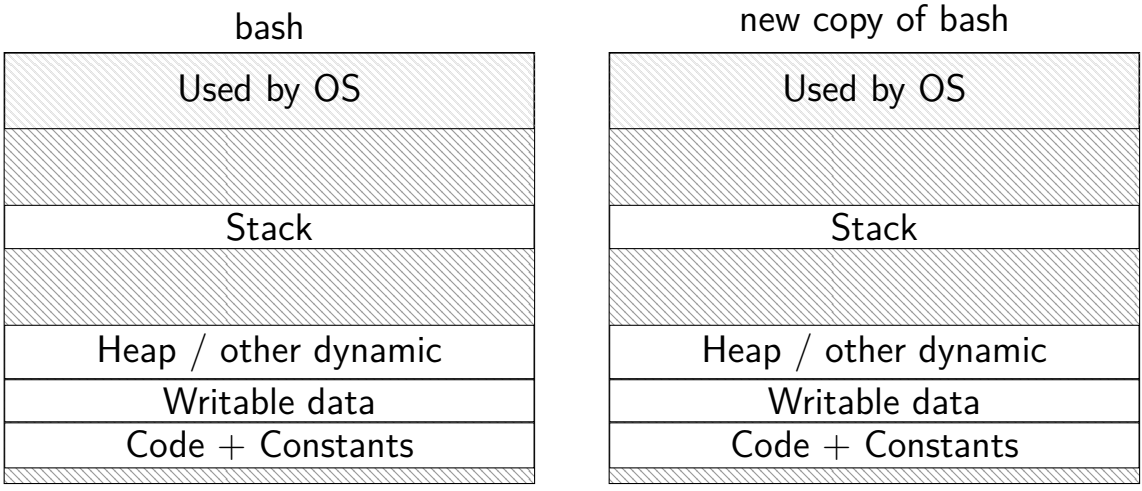

do we really need a complete copy?

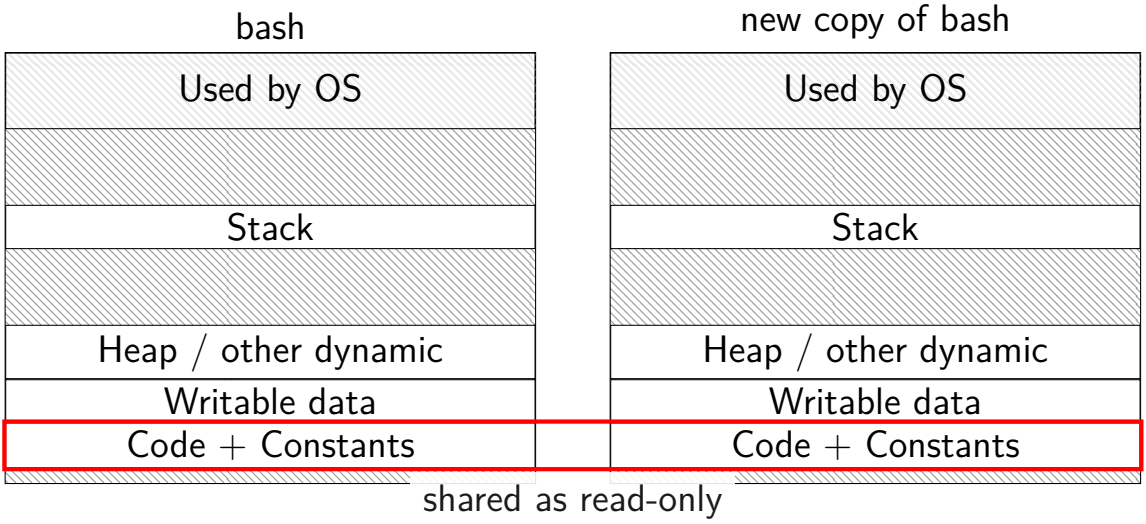

do we really need a complete copy?

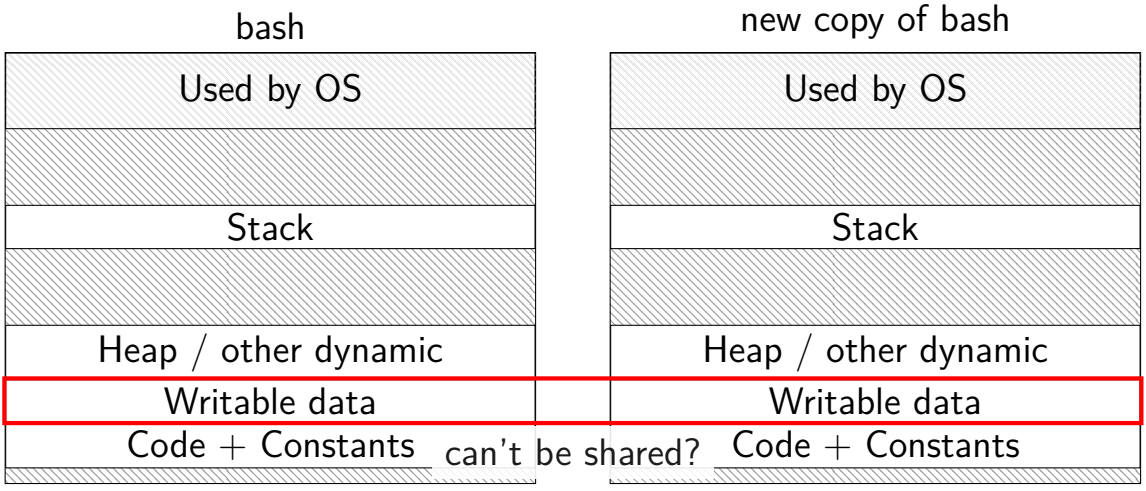

trick for extra sharing

sharing writeable data is fine — until either process modifies the copy

can we detect modifications?

trick: tell CPU (via page table) shared part is read-only

processor will trigger a fault when it's written

copy-on-write and page tables

VPN	valid?	write?	physical page
…	…	…	…
0x00601	1	1	0x12345
0x00602	1	1	0x12347
0x00603	1	1	0x12340
0x00604	1	1	0x200DF
0x00605	1	1	0x200AF
…	…	…	…

copy-on-write and page tables

VPN	valid?	write?	physical page
…	…	…	…
0x00601	1	0	0x12345
0x00602	1	0	0x12347
0x00603	1	0	0x12340
0x00604	1	0	0x200DF
0x00605	1	0	0x200AF
…	…	…	…

VPN	valid?	write?	physical page
…	…	…	…
0x00601	1	0	0x12345
0x00602	1	0	0x12347
0x00603	1	0	0x12340
0x00604	1	0	0x200DF
0x00605	1	0	0x200AF
…	…	…	…

copy operation actually duplicates page table
both processes share all physical pages
but marks pages in both copies as read-only

copy-on-write and page tables

VPN	valid?	write?	physical page
…	…	…	…
0x00601	1	0	0x12345
0x00602	1	0	0x12347
0x00603	1	0	0x12340
0x00604	1	0	0x200DF
0x00605	1	0	0x200AF
…	…	…	…

VPN	valid?	write?	physical page
…	…	…	…
0x00601	1	0	0x12345
0x00602	1	0	0x12347
0x00603	1	0	0x12340
0x00604	1	0	0x200DF
0x00605	1	0	0x200AF
…	…	…	…

when either process tries to write read-only page triggers a fault — OS actually copies the page

copy-on-write and page tables

VPN	valid?	write?	physical page
…	…	…	…
0x00601	1	0	0x12345
0x00602	1	0	0x12347
0x00603	1	0	0x12340
0x00604	1	0	0x200DF
0x00605	1	0	0x200AF
…	…	…	…

VPN	valid?	write?	physical page
…	…	…	…
0x00601	1	0	0x12345
0x00602	1	0	0x12347
0x00603	1	0	0x12340
0x00604	1	0	0x200DF
0x00605	1	1	0x300FD
…	…	…	…

after allocating a copy, OS reruns the write instruction

conections

connections: two-way channel for messages

extra operations: connect, accept

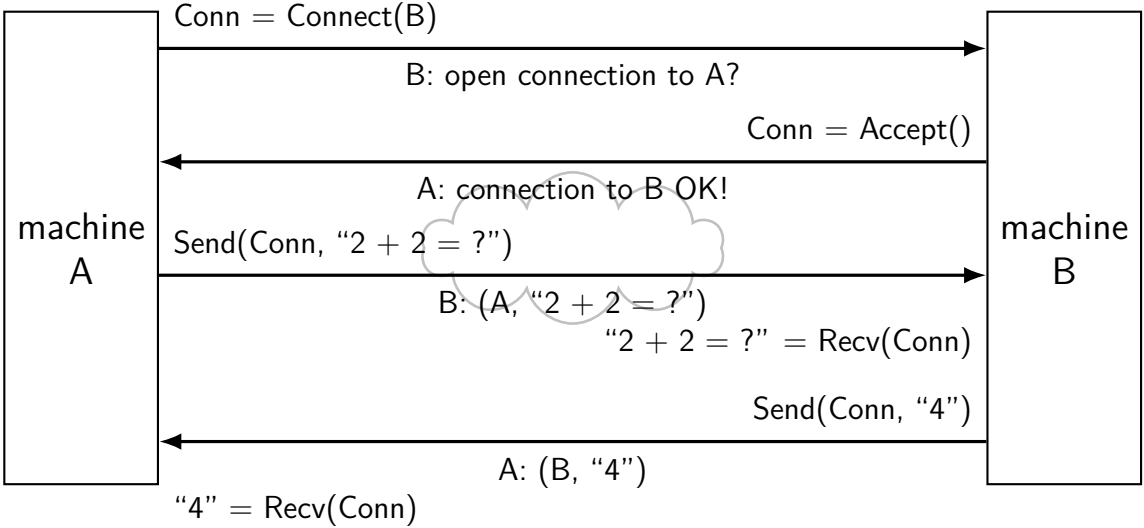

mailbox model

mailbox abstraction: send/receive messages

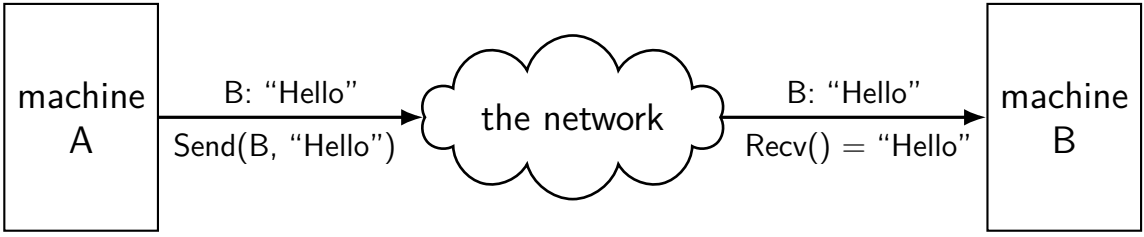

mailbox model

mailbox abstraction: send/receive messages

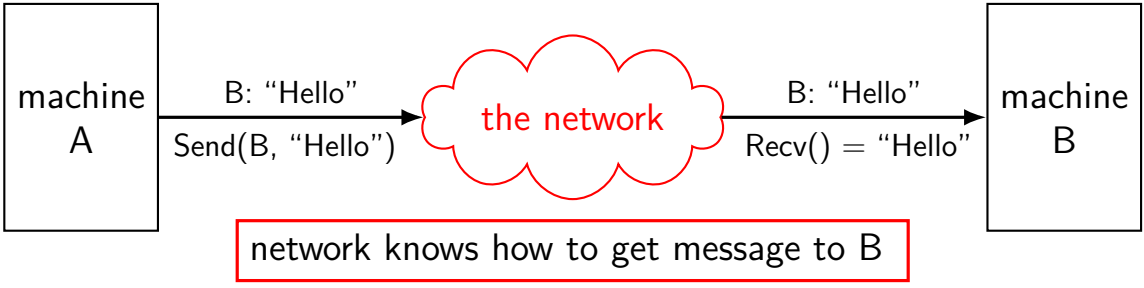

mailbox model

mailbox abstraction: send/receive messages

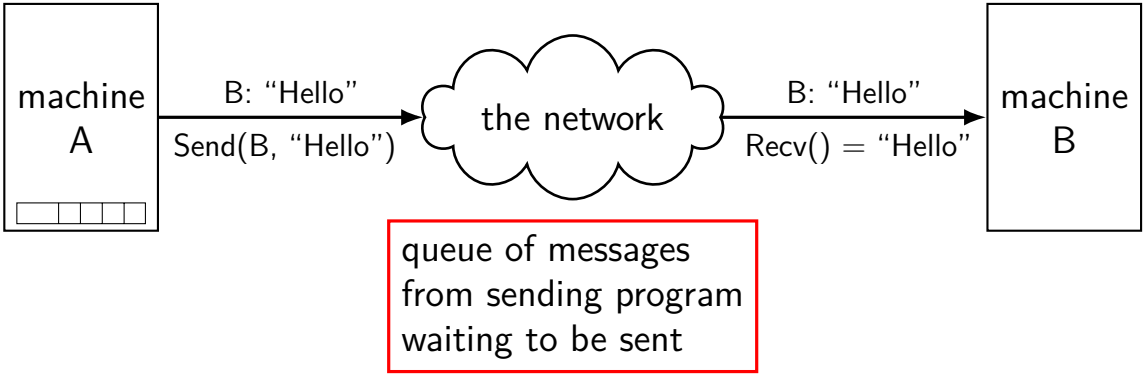

mailbox model

mailbox abstraction: send/receive messages

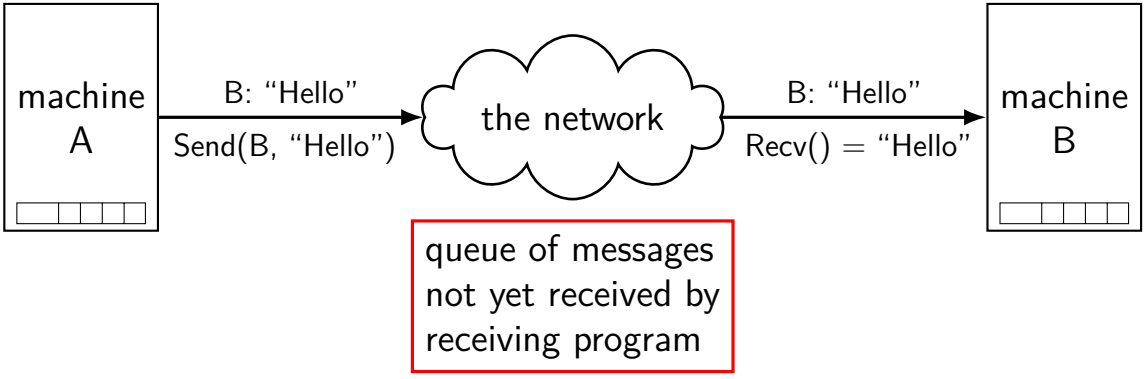

connections over mailboxes

real Internet: mailbox-style communication

- send packets to particular mailboxes
- no gaurentee on order, when received

sockets implemented on top of this

recall: sockets

open connection then ...

read+write just like a terminal file

doesn't look like individual messages

"connection abstraction"

layers

application	HTTP, SSH, SMTP, ...	application-defined meanings
transport	TCP, UDP, ...	reach correct program, reliablity/streams
network	IPv4, IPv6, ...	reach correct machine (across networks)
link	Ethernet, Wi-Fi, ...	coordinate shared wire/radio
physical	...	encode bits for wire/radio

layers

application	HTTP, SSH, SMTP, ...	application-defined meanings
transport	TCP, UDP, ...	reach correct program, reliablity/streams
network	IPv4, IPv6, ...	reach correct machine (across networks)
link	Ethernet, Wi-Fi, ...	coordinate shared wire/radio
physical	...	encode bits for wire/radio

network limitations/failures

messages lost

messages delayed/reordered

messages limited in size

messages corrupted

network limitations/failures

messages lost

messages delayed/reordered

messages limited in size

messages corrupted

dealing with network message lost

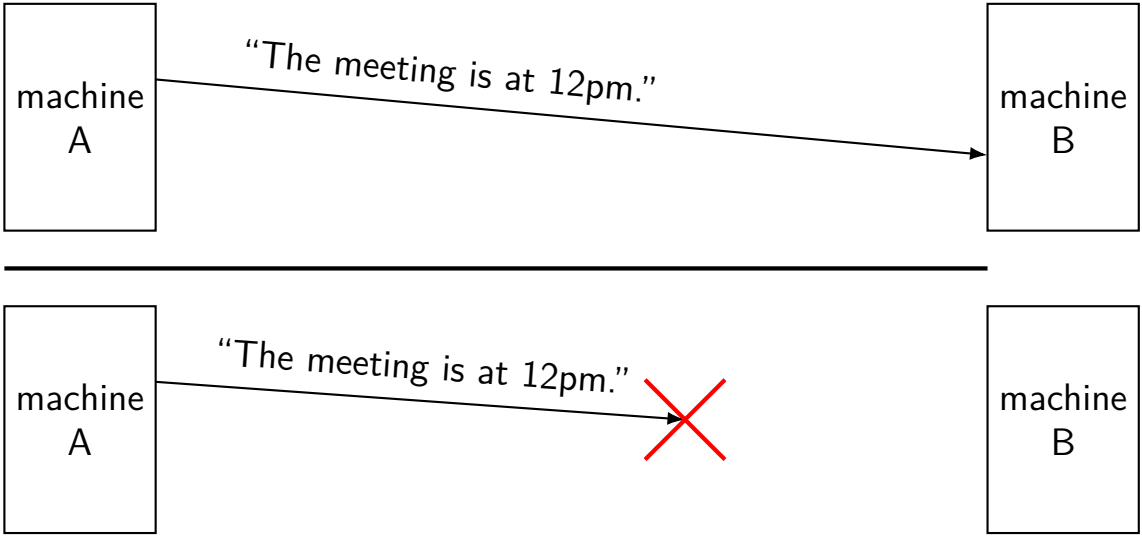

handling lost message: acknowledgements

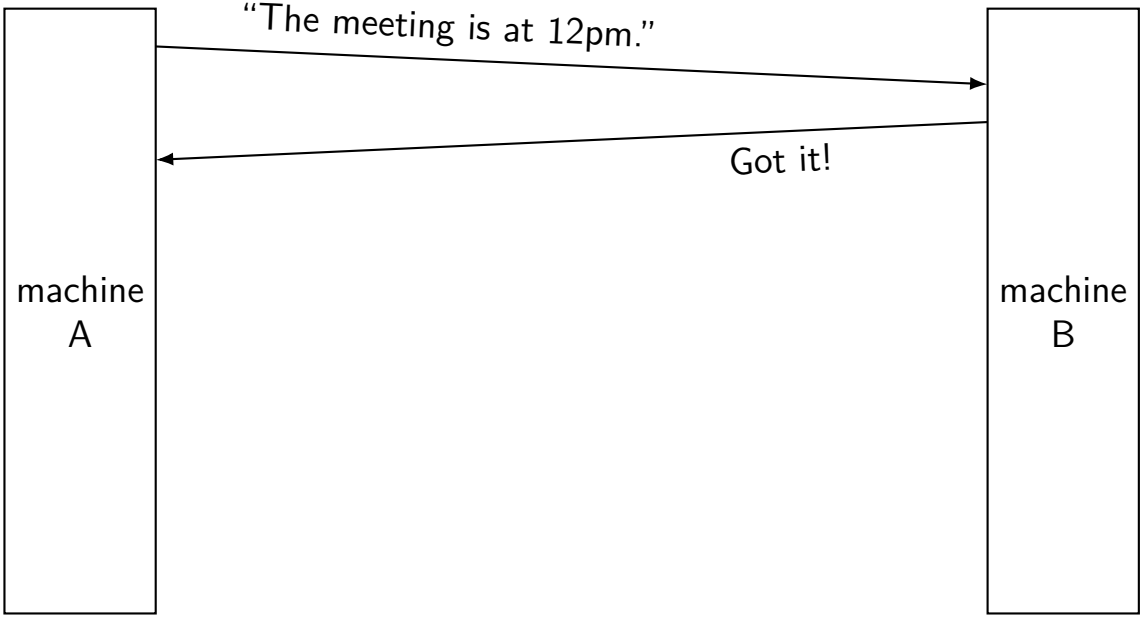

handling lost message

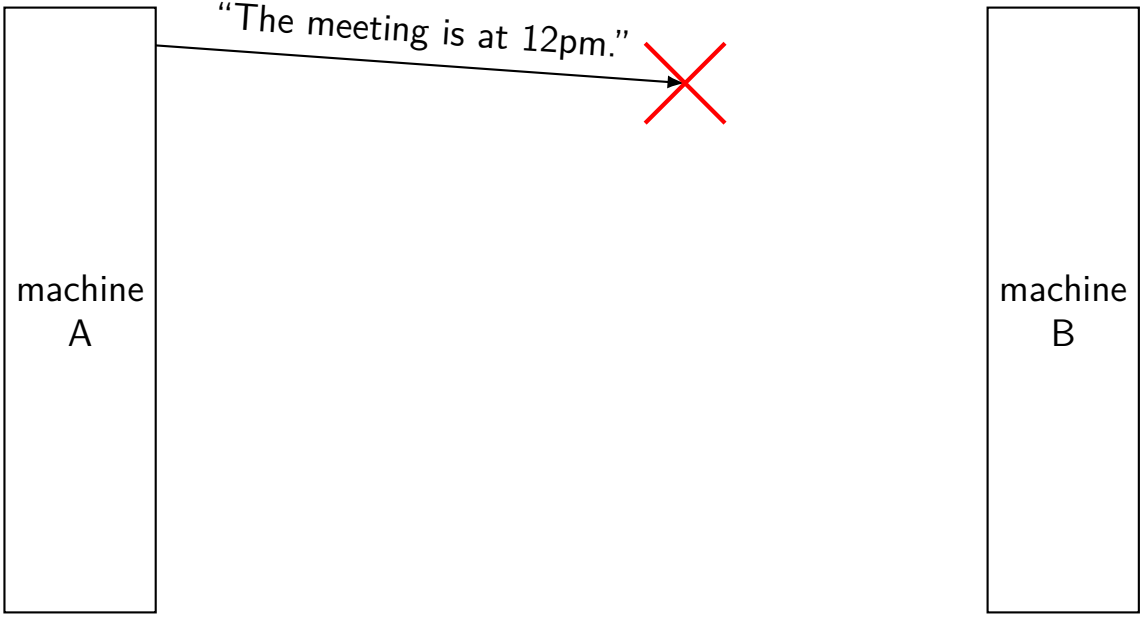

handling lost message

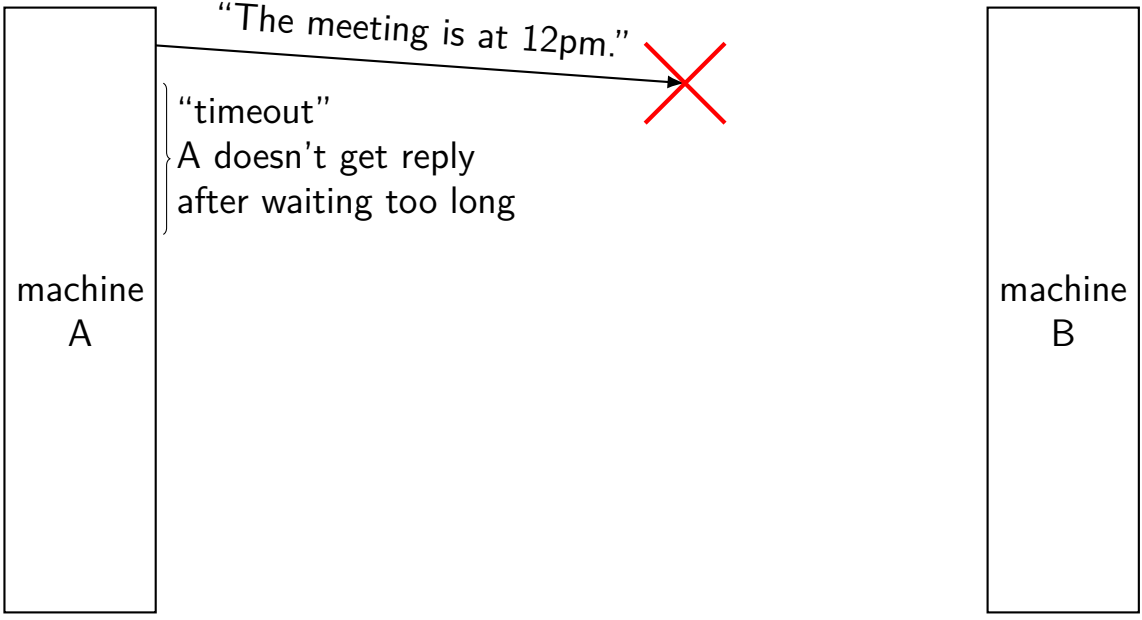

handling lost message

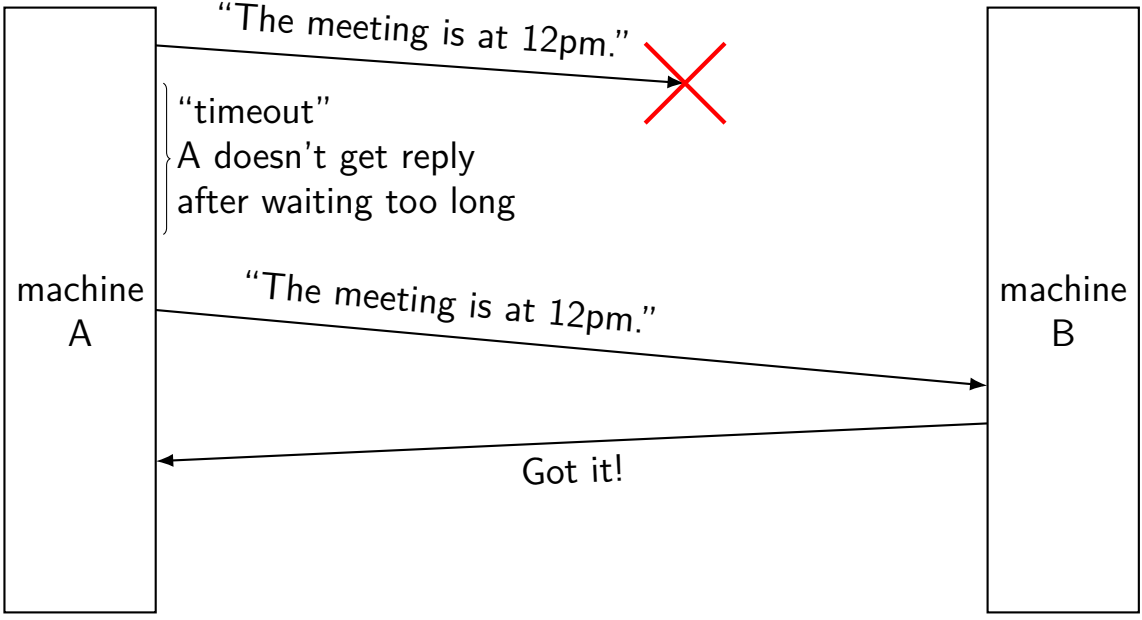

exercise: lost acknowledgement

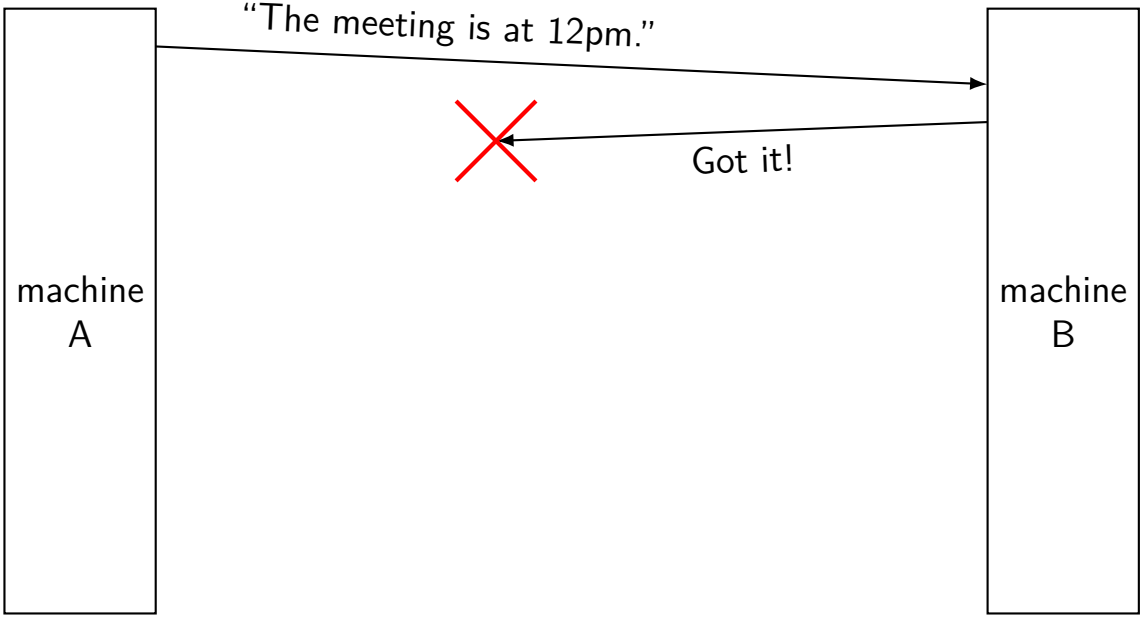

exercise: how to fix this?

lost acknowledgements

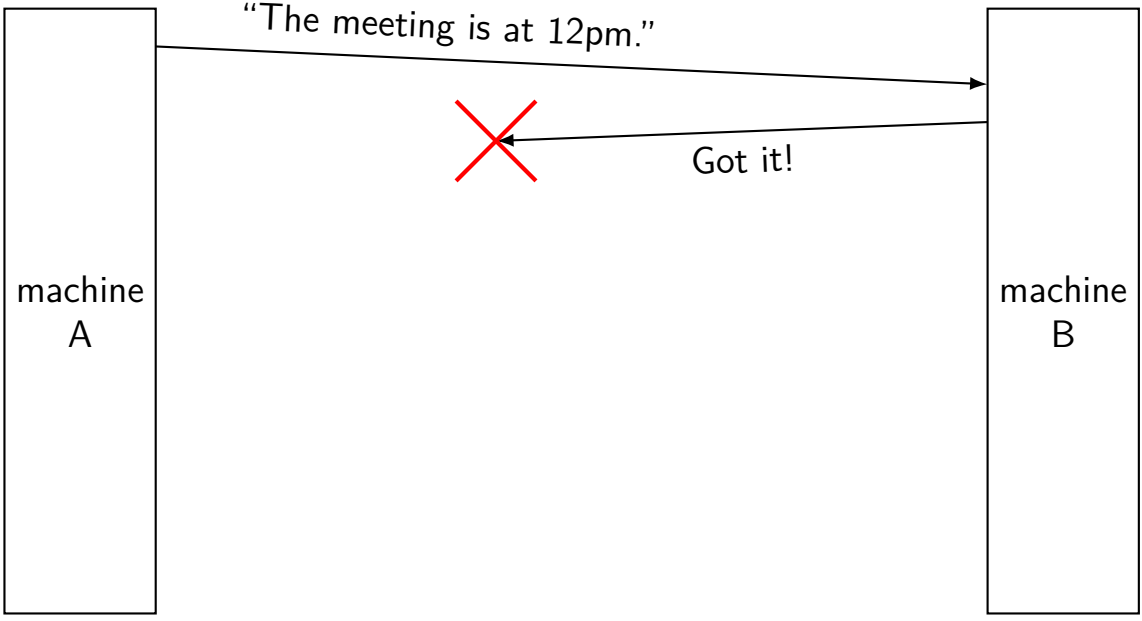

lost acknowledgements

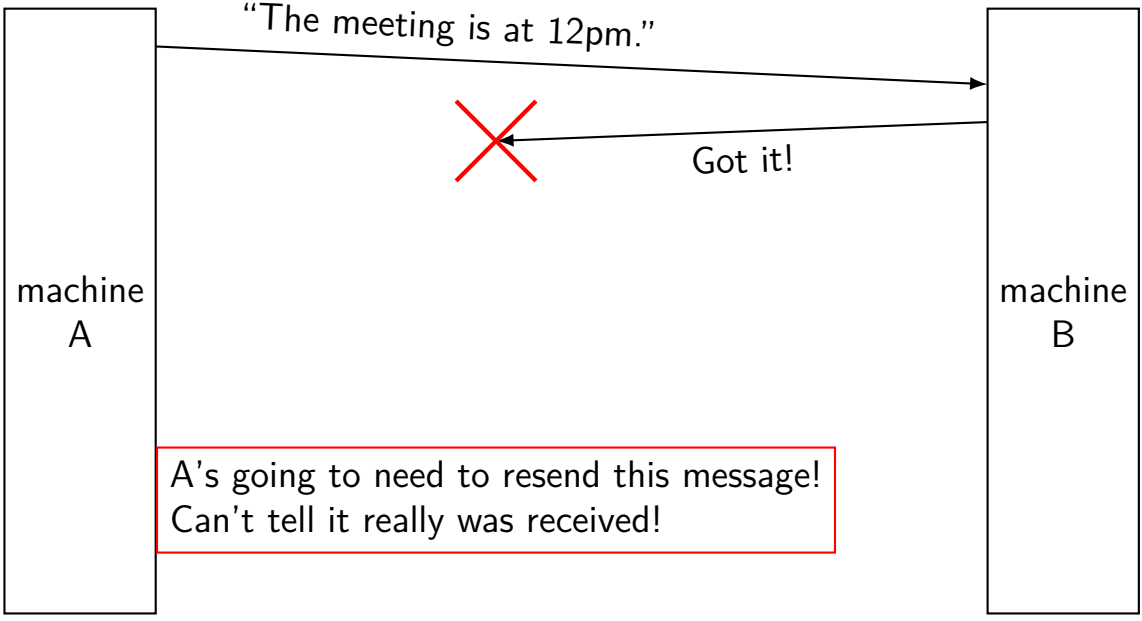

lost acknowledgements

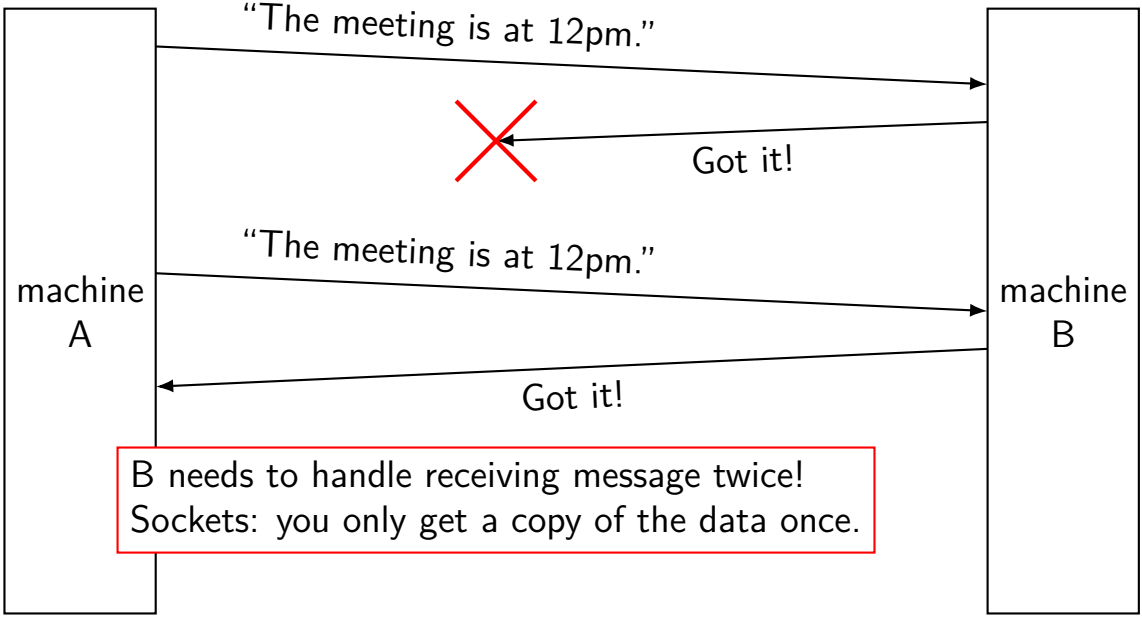

network limitations/failures

messages lost

messages delayed/reordered

messages limited in size

messages corrupted

delayed message

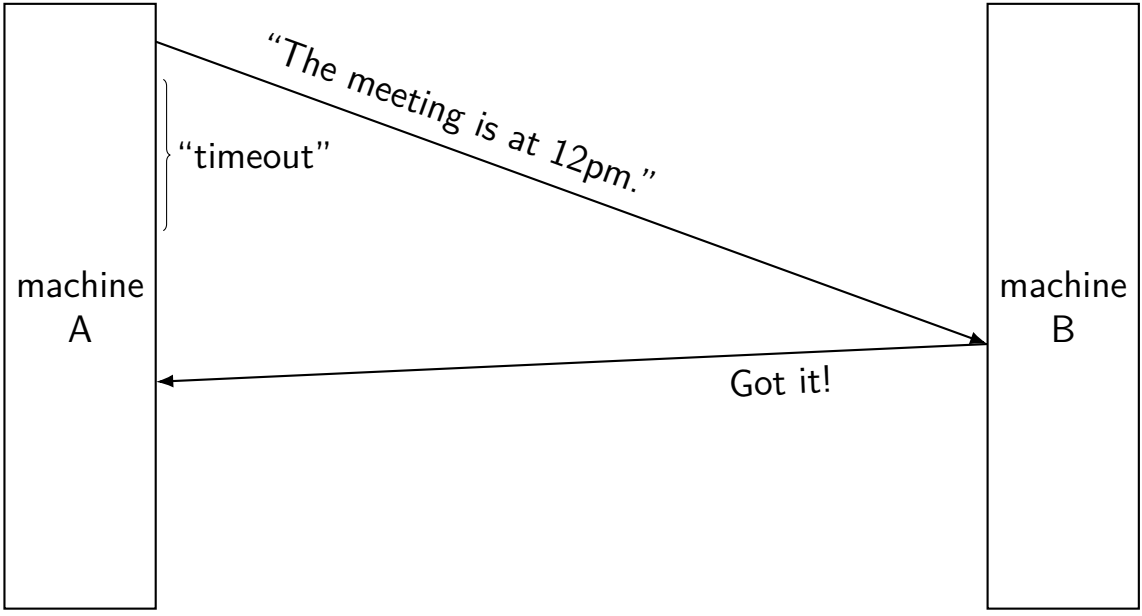

delayed message

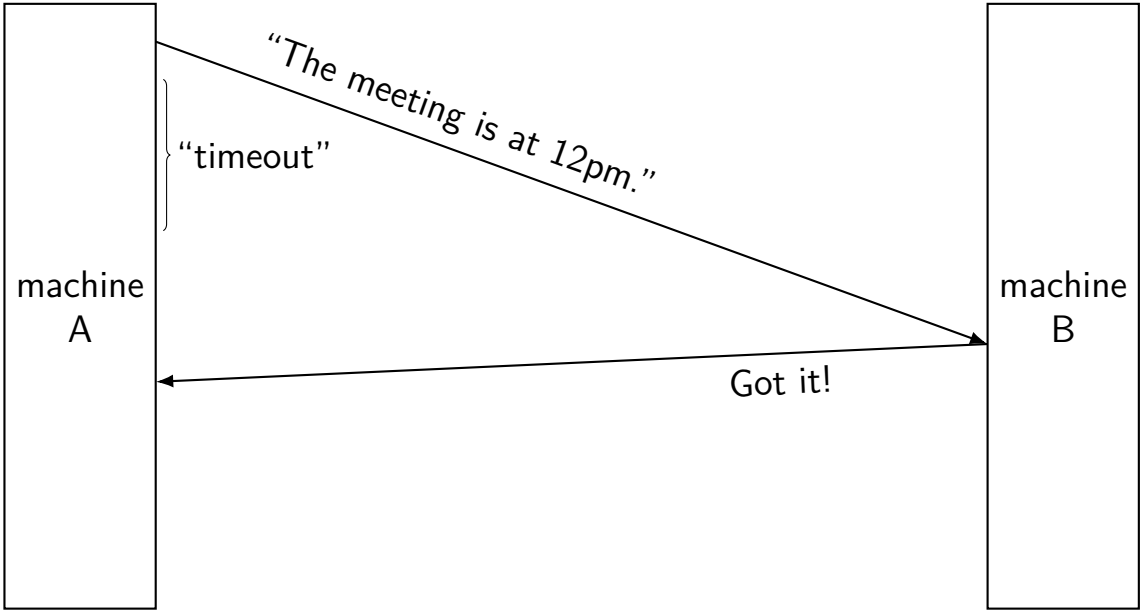

delayed message

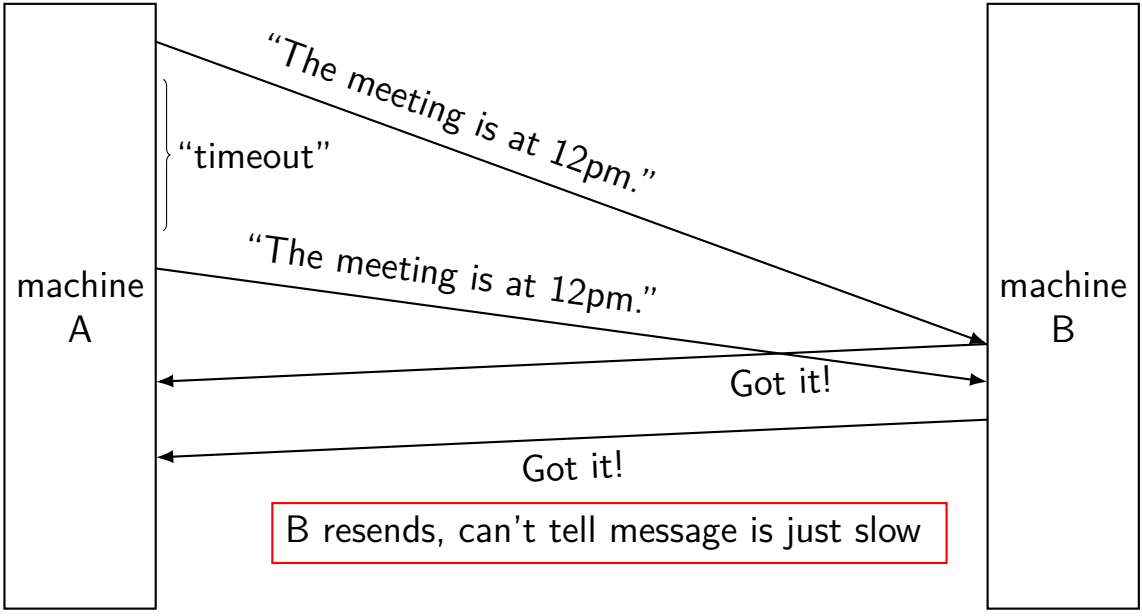

delayed acknowledgements

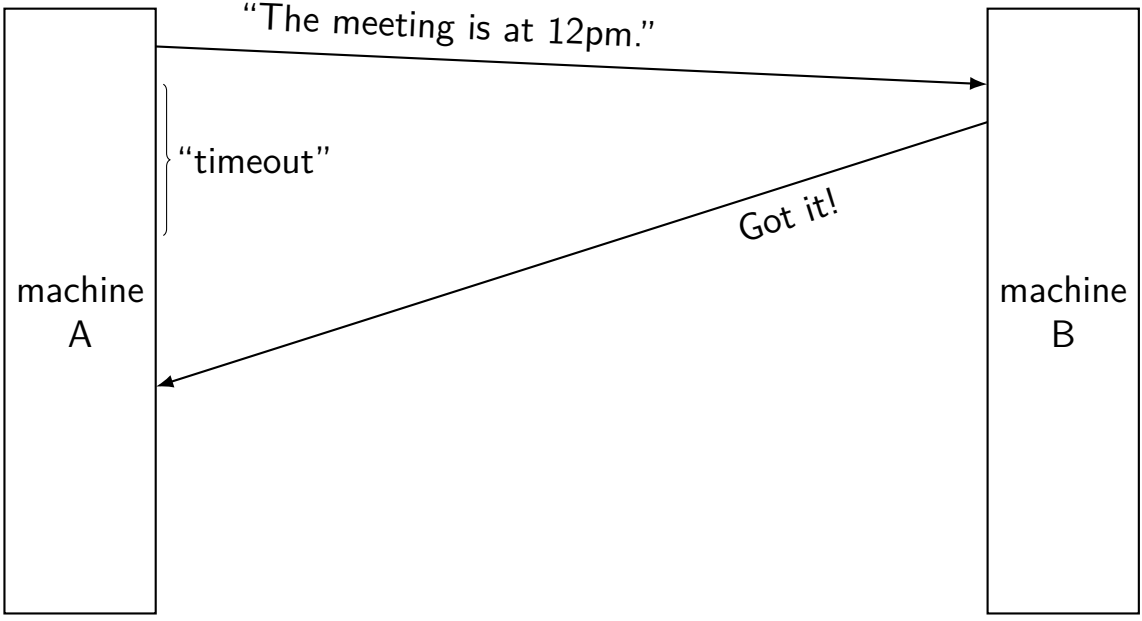

delayed acknowledgements

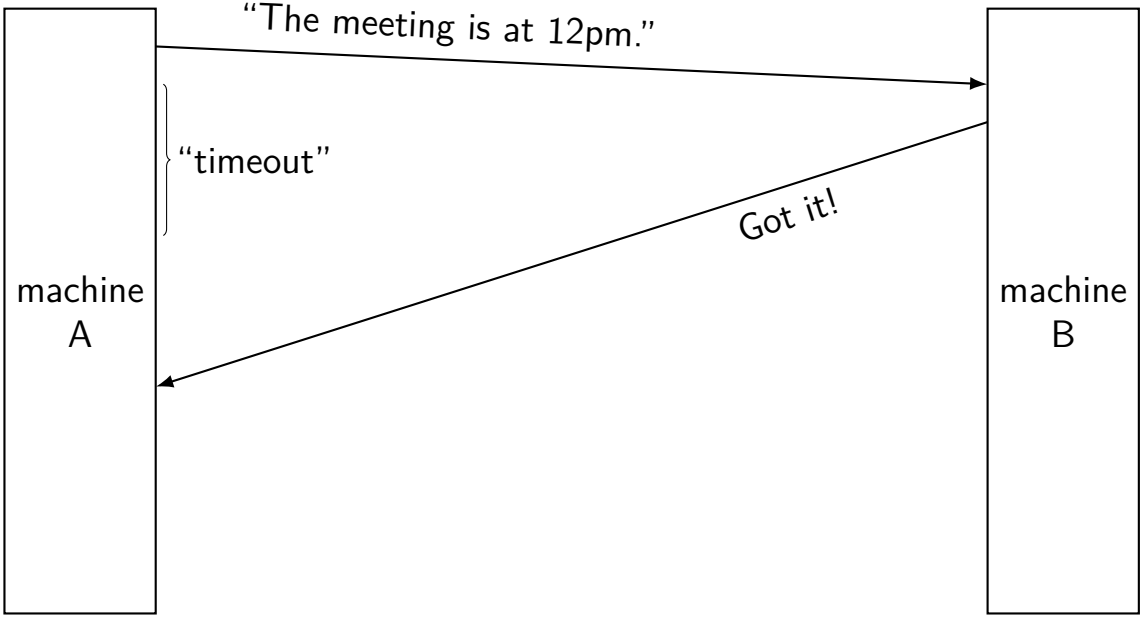

delayed acknowledgements

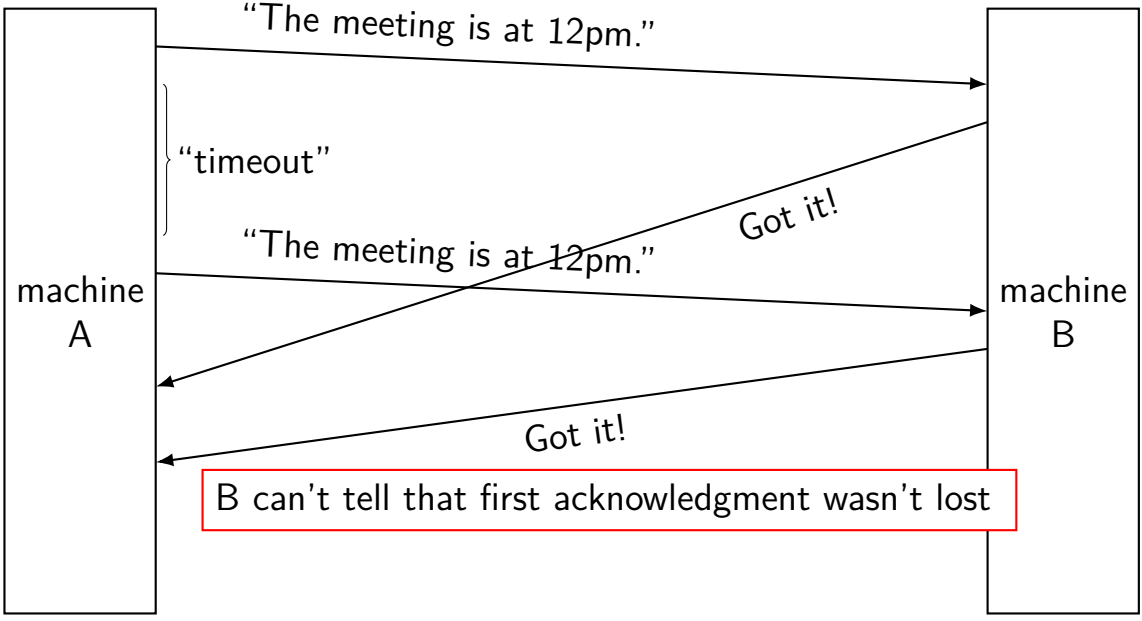

network limitations/failures

messages lost

messages delayed/reordered

messages limited in size

messages corrupted

splitting messages: try 1

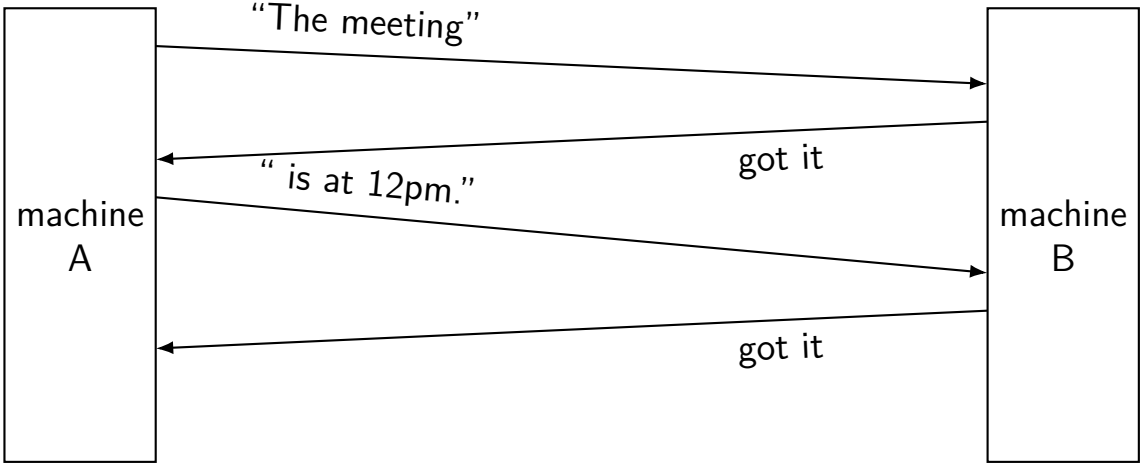

reconstructed message:
The meeting is at 12pm.

splitting messages: try 1 — problem 1

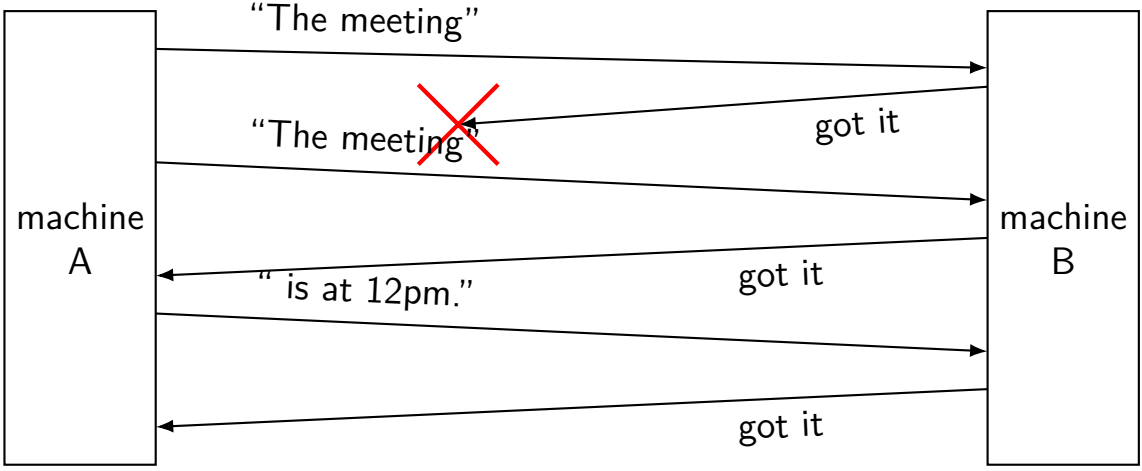

splitting messages: try 1 — problem 1

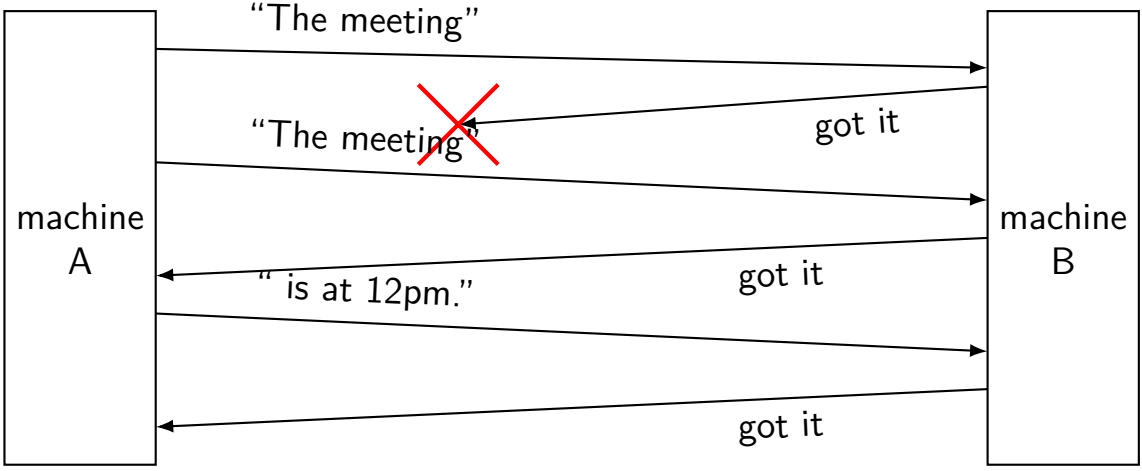

reconstructed message:
The meetingThe meeting is at 12pm.

exercise: other problems?

other scenarios where we'd also have problems?

A. message (instead of acknowledgment) is lost
B. first message from A is delayed a long time by network
C. acknowledgment of second message lost instead of first

splitting messages: try 2

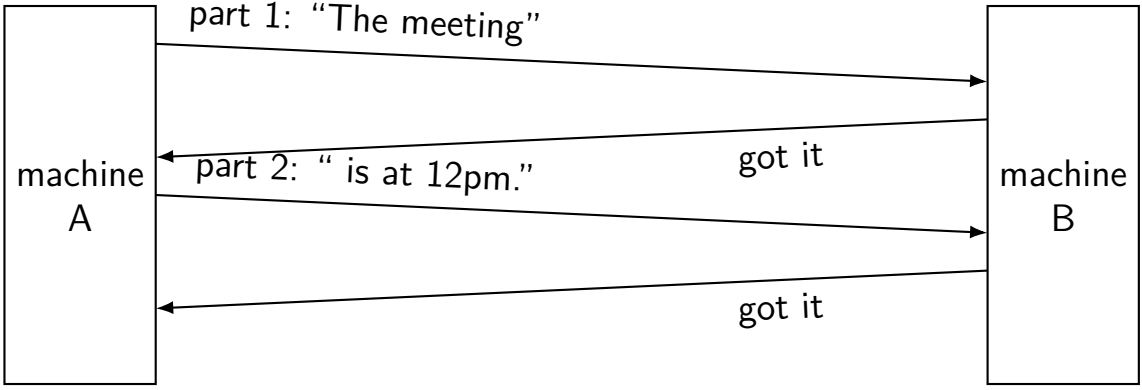

reconstructed message:
The meeting is at 12pm.

splitting messages: try 2 — missed ack

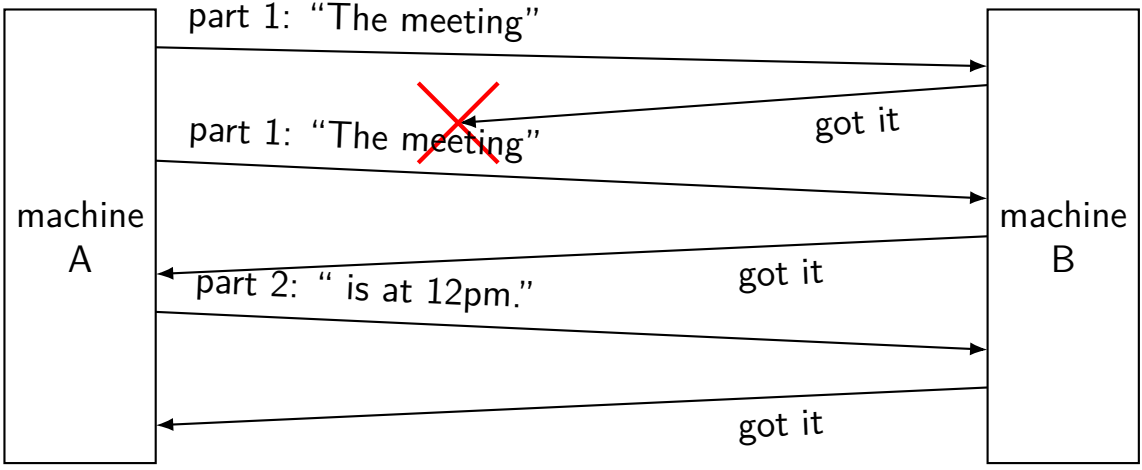

reconstructed message:
The meeting is at 12pm.

splitting messages: try 2 — problem

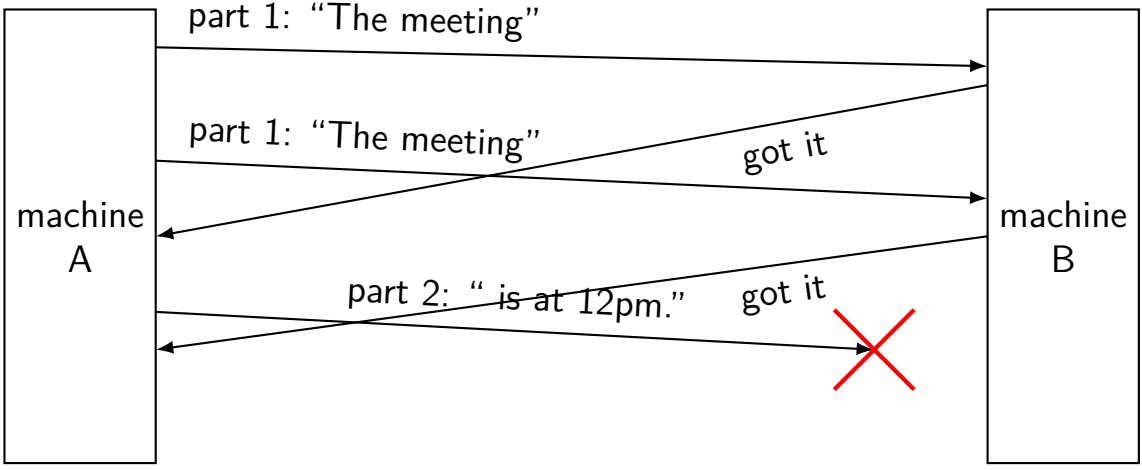

A thinks: part 1 + part 2 acknowleged!

splitting messages: version 3

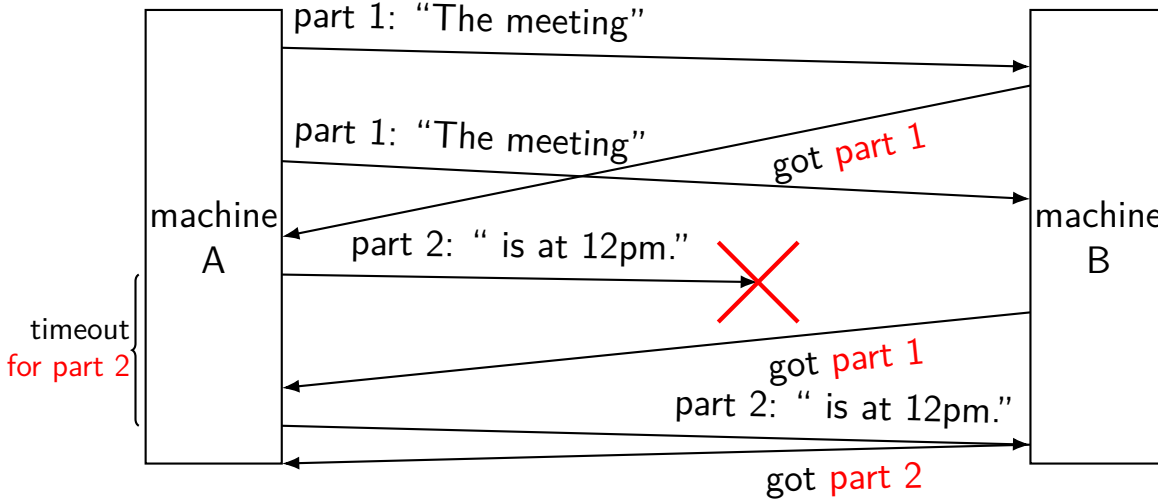

network limitations/failures

messages lost

messages delayed/reordered

messages limited in size

messages corrupted

message corrupted

instead of sending “message”

say Hash(“message”) = 0xABCDEF12

then send “0xABCDEF12,message”

when receiving, recompute hash

pretend message lost if does not match

“checksum”

these hashes commonly called “checksums”

in UDP/TCP, produced by adding message parts together (with wraparound)

going faster

so far: send one message, get acknowledgments

pretty slow

instead, can send a bunch of parts and get them acknowledged together

need to do *congestion control* to avoid overloading network

layers

application	HTTP, SSH, SMTP, ...	application-defined meanings
transport	TCP, UDP, ...	reach correct program, reliablity/streams
network	IPv4, IPv6, ...	reach correct machine (across networks)
link	Ethernet, Wi-Fi, ...	coordinate shared wire/radio
physical	...	encode bits for wire/radio

more than four layers?

sometimes more layers above 'application'

e.g. HTTPS:
HTTP (app layer) on TLS (another app layer) on TCP (network) on ...

e.g. DNS over HTTPS:
DNS (app layer) on HTTP on on TLS on TCP on ...

e.g. SFTP:
SFTP (app layer??) on SSH (another app layer) on TCP on ...

e.g. HTTP over OpenVPN:
HTTP on TCP on IP on OpenVPN on UDP on different IP on ...

names and addresses

name	address
logical identifier	location/how to locate
variable `counter`	memory address `0x7FFF9430`
DNS name `www.virginia.edu`	IPv4 address `128.143.22.36`
DNS name `mail.google.com`	IPv4 address `216.58.217.69`
DNS name `mail.google.com`	IPv6 address `2607:f8b0:4004:80b`
DNS name `reiss-t3620.cs.virginia.edu`	IPv4 address `128.143.67.91`
DNS name `reiss-t3620.cs.virginia.edu`	MAC address `18:66:da:2e:7f`
service name `https`	port number 443
service name `ssh`	port number 22

layers

application	HTTP, SSH, SMTP, ...	application-defined meanings
transport	TCP, UDP, ...	reach correct program, reliablity/streams
network	IPv4, IPv6, ...	reach correct machine (across networks)
link	Ethernet, Wi-Fi, ...	coordinate shared wire/radio
physical	...	encode bits for wire/radio

an Ethernet frame

destination MAC address						source MAC address						frame type	
4c	cc	6a	ba	1c	b9	d8	07	b6	d9	ae	50	08	00

frame's data

```
45 00 00 60 db 89 40 00 f2 06 cf cd 34 60 e6 a2

c0 a8 01 95 01 bb aa c4 40 2b d6 46 7c 9d 15 e4

80 18 40 02 65 fe 00 00 01 01 08 0a 03 83 98 62

19 70 27 9e 17 03 03 00 27 00 00 00 00 00 00 00
c8 b9 ab 81 50 e0 ef 1a d8 97 73 76 9a ee 33 d4
9a cb 17 29 f0 fa 1c 13 4c b0 07 ef 92 8b 0a a9
```

an Ethernet frame

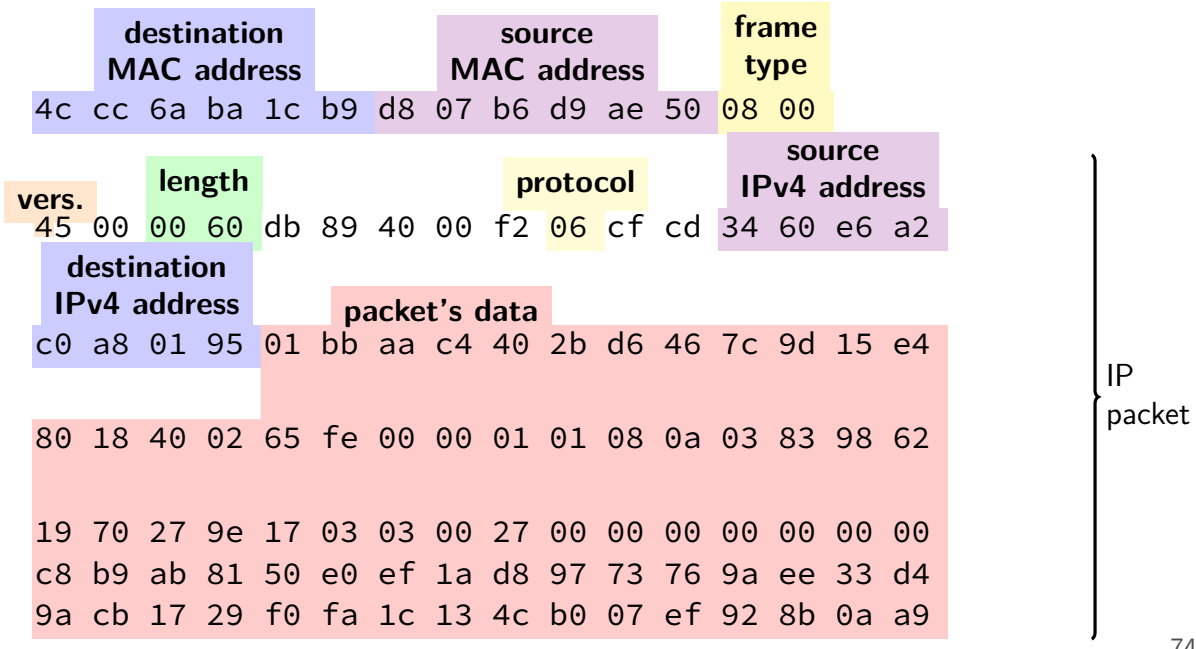

an Ethernet frame

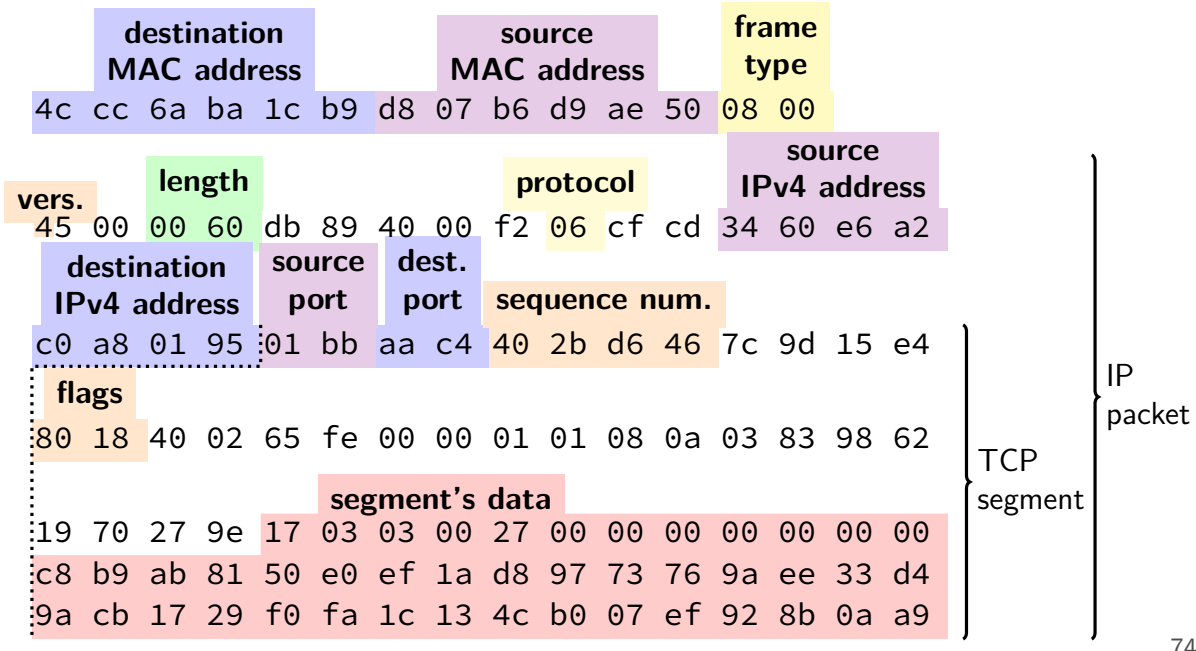

the link layer

Ethernet, Wi-Fi, Bluetooth, DOCSIS (cable modems), ...

allows send/recv messages to machines on "same" network segment

- typically: wireless range+channel or connected to a single switch/router
- could be larger (if *bridging* multiple network segments)
- could be smaller (switch/router uses "virtual LANs")

typically: source+destination specified with MAC addresses

- MAC = media access control
- usually manufacturer assigned / hard-coded into device
- unique address per port/wifi transmitter/etc.

can specify destination of "anyone" (called *broadcast*)

messages usually called "frames"

link layer quality of service

if frame gets...

event	on Ethernet	on WiFi
collides with another	detected + may resend	resend
not received	lose silently	resent
header corrupted	usually discard silently	usually resend
data corrupted	usually discard silently	usually resend
too long	not allowed to send	not allowed to send
reordered (v. other messages)	received out of order	received out of order
destination unknown	lose silently	usually resend??
too much being sent	discard excess?	discard excess?

layers

application	HTTP, SSH, SMTP, ...	application-defined meanings
transport	TCP, UDP, ...	reach correct program, reliablity/streams
network	IPv4, IPv6, ...	reach correct machine (across networks)
link	Ethernet, Wi-Fi, ...	coordinate shared wire/radio
physical	...	encode bits for wire/radio

the network layer

the Internet Protocool (IP) version 4 or version 6

- there are also others, but quite uncommon today

allows send messages to/recv messages from other networks

- "internetwork"

messages usually called "packets"

network layer quality of service

if packet ...

event	on IPv4/v6
collides with another	out of scope — handled by link layer
not received	lost silently
header corrupted	usually discarded silently
data corrupted	received corrupted
too long	dropped with notice or "fragmented" + recombined
reordered (v. other messages)	received out of order
destination unknown	usually dropped with notice
too much being sent	discard excess

network layer quality of service

if packet ...

event	on IPv4/v6
collides with another	out of scope — handled by link layer
not received	lost silently
header corrupted	usually discarded silently
data corrupted	received corrupted
too long	dropped with notice or "fragmented" + recombined
reordered (v. other messages)	received out of order
destination unknown	usually dropped with notice
too much being sent	discard excess

includes dropped by link layer
(e.g. if detected corrupted there)

IPv4 addresses and routing tables

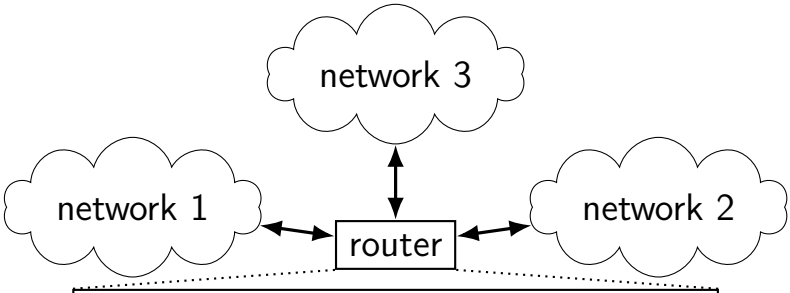

if I receive data for...	send it to...
128.143.0.0—128.143.255.255	network 1
192.107.102.0–192.107.102.255	network 1
...	...
4.0.0.0–7.255.255.255	network 2
64.8.0.0–64.15.255.255	network 2
...	...
anything else	network 3

layers

application	HTTP, SSH, SMTP, ...	application-defined meanings
transport	TCP, UDP, ...	reach correct program, reliablity/streams
network	IPv4, IPv6, ...	reach correct machine (across networks)
link	Ethernet, Wi-Fi, ...	coordinate shared wire/radio
physical	...	encode bits for wire/radio

port numbers

we run multiple programs on a machine

- IP addresses identifying machine — not enough

port numbers

we run multiple programs on a machine

- IP addresses identifying machine — not enough

so, add 16-bit *port numbers*

- think: multiple PO boxes at address

port numbers

we run multiple programs on a machine

- IP addresses identifying machine — not enough

so, add 16-bit *port numbers*

- think: multiple PO boxes at address

0–49151: typically assigned for particular services

- 80 = http, 443 = https, 22 = ssh, ...

49152–65535: allocated on demand

- default "return address" for client connecting to server

UDP v TCP

UDP: messages sent to program, but no reliablity/streams

- get assigned port number
- SOCK_DGRAM with socket() instead of SOCK_STREAM
- can sendto()/recvfrom() multiple other programs with one socket
  - (but don't have to)
- send messages which are limited in size, unreliable

TCP: stream to other program

- need to bind() + listen() + accept() or connect() to setup connection
- one socket per connection
- read/write bytes — divided into messages automatically
- reliable — acknowledgments/resending handled for you

connections in TCP/IP

connection identified by *5-tuple*

used by OS to lookup "where is the socket?"

(protocol=TCP/UDP, local IP addr., local port, remote IP addr., remote port)

local IP address, port number can be set with `bind()` function

typically always done for servers, not done for clients

system will choose default if you don't

connections on my desktop

```
cr4bd@reiss-t3620>/u/cr4bd
$ netstat --inet --inet6 --numeric
Active Internet connections (w/o servers)
Proto Recv-Q Send-Q Local Address           Foreign Address         State
tcp        0      0 128.143.67.91:49202     128.143.63.34:22        ESTABLISHE
tcp        0      0 128.143.67.91:803       128.143.67.236:2049     ESTABLISHE
tcp        0      0 128.143.67.91:50292     128.143.67.226:22       TIME_WAIT
tcp        0      0 128.143.67.91:54722     128.143.67.236:2049     TIME_WAIT
tcp        0      0 128.143.67.91:52002     128.143.67.236:111      TIME_WAIT
tcp        0      0 128.143.67.91:732       128.143.67.236:63439    TIME_WAIT
tcp        0      0 128.143.67.91:40664     128.143.67.236:2049     TIME_WAIT
tcp        0      0 128.143.67.91:54098     128.143.67.236:111      TIME_WAIT
tcp        0      0 128.143.67.91:49302     128.143.67.236:63439    TIME_WAIT
tcp        0      0 128.143.67.91:50236     128.143.67.236:111      TIME_WAIT
tcp        0      0 128.143.67.91:22        172.27.98.20:49566      ESTABLISHE
tcp        0      0 128.143.67.91:51000     128.143.67.236:111      TIME_WAIT
tcp        0      0 127.0.0.1:50438         127.0.0.1:631           ESTABLISHE
tcp        0      0 127.0.0.1:631           127.0.0.1:50438         ESTABLISHE
```

non-connection sockets

TCP servers waiting for connections +
UDP sockets with no particular remote host

Linux: OS keeps 5-tuple with “wildcard” remote address

“listening” sockets on my desktop

```
cr4bd@reiss-t3620>/u/cr4bd
$ netstat --inet --inet6 --numeric --listen
Active Internet connections (only servers)
Proto Recv-Q Send-Q Local Address           Foreign Address         State
tcp        0      0 127.0.0.1:38537         0.0.0.0:*               LISTEN
tcp        0      0 127.0.0.1:36777         0.0.0.0:*               LISTEN
tcp        0      0 0.0.0.0:41099           0.0.0.0:*               LISTEN
tcp        0      0 0.0.0.0:45291           0.0.0.0:*               LISTEN
tcp        0      0 127.0.0.1:51949         0.0.0.0:*               LISTEN
tcp        0      0 127.0.0.1:41071         0.0.0.0:*               LISTEN
tcp        0      0 0.0.0.0:111             0.0.0.0:*               LISTEN
tcp        0      0 127.0.0.1:32881         0.0.0.0:*               LISTEN
tcp        0      0 127.0.0.1:38673         0.0.0.0:*               LISTEN
....
tcp6       0      0 :::42689                :::*                    LISTEN
udp        0      0 128.143.67.91:60001     0.0.0.0:*
udp        0      0 128.143.67.91:60002     0.0.0.0:*
...
udp6       0      0 :::59938                :::*
```

URL / URIs

Uniform Resource Locators (URL)

tells how to find “resource” on network

Unifrom Resources Identifiers

superset of URLs

URI examples

```
https://kytos02.cs.virginia.edu:443/cs3130-spring2023/
                quizzes/quiz.php?qid=02#q2

https://kytos02.cs.virginia.edu/cs3130-spring2023/
                quizzes/quiz.php?qid=02

https://www.cs.virginia.edu/

sftp://cr4bd@portal.cs.virginia.edu/u/cr4bd/file.txt

tel:+1-434-982-2200
```

URI generally

`scheme://authority/path?query#fragment`

scheme: — what protocol

//authority/

authoirty = user@host:port OR host:port OR user@host OR host

path

which resource

?query — usually key/value pairs

#fragment — place in resource

most components (sometimes) optional

DNS: distributed database

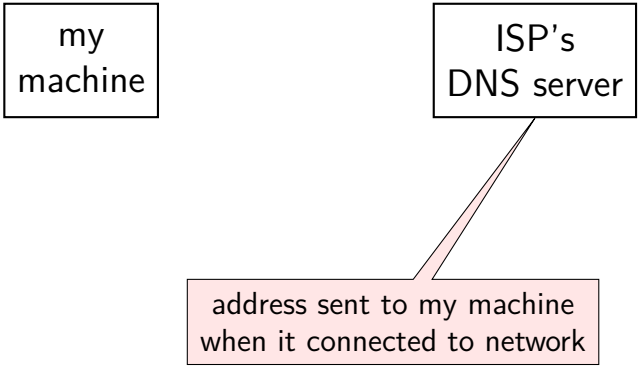

DNS: distributed database

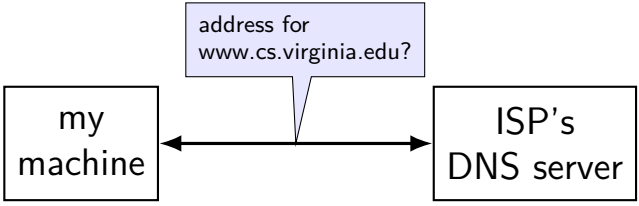

DNS: distributed database

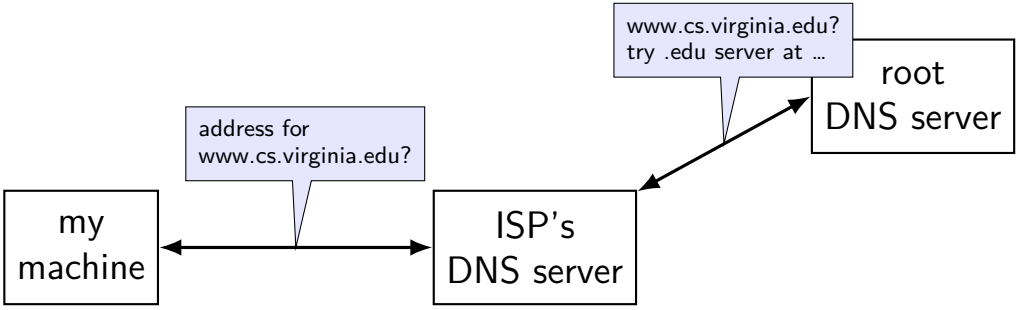

DNS: distributed database

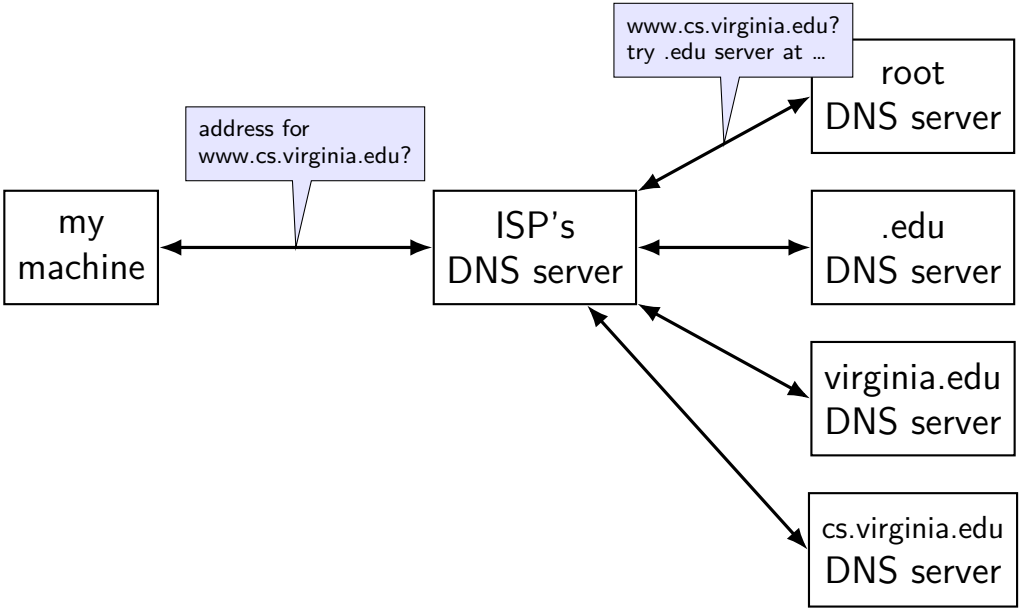

DNS: distributed database

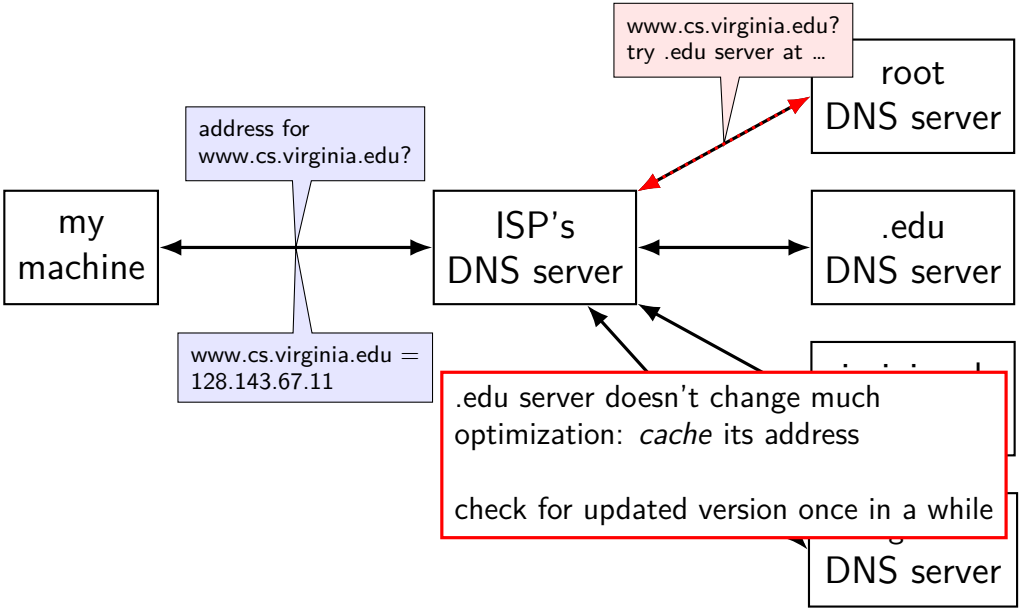

autoconfiguration

problem: how does my machine get IP address

otherwise:

- have sysadmin type one in?
- just choose one?
- ask someone on local network to assign it

autoconfiguration

problem: how does my machine get IP address

otherwise:

- have sysadmin type one in?
- just choose one?
- ask someone on local network to assign it

DHCP high-level

protocol done over UDP

but since we don't have IP address yet, use `0.0.0.0`

and since we don't know server address, use `255.255.255.255`
= "everyone on the local network"

local server replies to request with address + time limit

backup slides

connection setup: server, manual

```
int server_socket_fd = socket(AF_INET, SOCK_STREAM, IPPROTO_TCP);
struct sockaddr_in addr;
addr.sin_family = AF_INET;
addr.sin_addr.s_addr = INADDR_ANY; /* "any address I can use" */
    /* or: addr.s_addr.in_addr = INADDR_LOOPBACK (127.0.0.1) */
    /* or: addr.s_addr.in_addr = htonl(...); */
addr.sin_port = htons(9999); /* port number 9999 */

if (bind(server_socket_fd, &addr, sizeof(addr)) < 0) {
    /* handle error */
}
listen(server_socket_fd, MAX_NUM_WAITING);
...
int socket_fd = accept(server_socket_fd, NULL);
```

connection setup: server, manual

```
int server_socket_fd = socket(AF_INET, SOCK_STREAM, IPPROTO_TCP);
struct sockaddr_in addr;
addr.sin_family = AF_INET;
addr.sin_addr.s_addr = INADDR_ANY; /* "any address I can use" */
    /* or: addr.s_addr.in_addr = INADDR_LOOPBACK (127.0.0.1) */
    /* or: addr.s_addr.in_addr = htonl(...); */
addr.sin_port = htons(9999); /* port number 9999 */

if (bind(server_socket_fd, &addr, sizeof(addr)) < 0) {
    /* handle error */
}
lister
...
int so
```

INADDR_ANY: accept connections for any address I can!

alternative: specify specific address

connection setup: server, manual

```
int server_socket_fd = socket(AF_INET, SOCK_STREAM, IPPROTO_TCP);
struct sockaddr_in addr;
addr.sin_family = AF_INET;
addr.sin_addr.s_addr = INADDR_ANY; /* "any address I can use" */
    /* or: addr.s_addr.in_addr = INADDR_LOOPBACK (127.0.0.1) */
    /* or: addr.s_addr.in_addr = htonl(...); */
addr.sin_port = htons(9999); /* port number 9999 */

if (bind(server_socket_fd, &addr, sizeof(addr)) < 0) {
    /* handle error */
}
lis
...
int
```

bind to 127.0.0.1? only accept connections from same machine

what we recommend for FTP server assignment

connection setup: server, manual

```
int server_socket_fd = socket(AF_INET, SOCK_STREAM, IPPROTO_TCP);
struct sockaddr_in addr;
addr.sin_family = AF_INET;
addr.sin_addr.s_addr = INADDR_ANY; /* "any address I can use" */
    /* or: addr.s_addr.in_addr = INADDR_LOOPBACK (127.0.0.1) */
    /* or: addr.s_addr.in_addr = htonl(...); */
addr.sin_port = htons(9999); /* port number 9999 */

if (bind(server_socket_fd, &addr, sizeof(addr)) < 0) {
    /* handle error */
}
listen(serv
...
int socket_fd = accept(server_socket_fd, NULL);
```

choose the number of unaccepted connections

connection setup: client — manual addresses

```
int sock_fd;

server = /* code on later slide */;
sock_fd = socket(
    AF_INET, /* IPv4 */
    SOCK_STREAM, /* byte-oriented */
    IPPROTO_TCP
);
if (sock_fd < 0) { /* handle error */ }

struct sockaddr_in addr;
addr.sin_family = AF_INET;
addr.sin_addr.s_addr = htonl(2156872459); /* 128.143.67.11 */
addr.sin_port = htons(80); /* port 80 */
if (connect(sock_fd, (struct sockaddr*) &addr, sizeof(addr)) {
    /* handle error */
}
DoClientStuff(sock_fd); /* read and write from sock_fd */
close(sock_fd);
```

connection setup: client — manual addresses

```
int sock_fd;

server = /* code on later slide */;
sock_fd = socket(
    AF_INET, /* IPv4 */
    SOCK_STREAM, /* byte-oriented */
    IPPROTO_TCP
);
if (sock_fd < 0) { /* handle error */ }
st
ad
addr.sin_addr.s_addr = htonl(2156872459); /* 128.143.67.11 */
addr.sin_port = htons(80); /* port 80 */
if (connect(sock_fd, (struct sockaddr*) &addr, sizeof(addr)) {
    /* handle error */
}
DoClientStuff(sock_fd); /* read and write from sock_fd */
close(sock_fd);
```

specify IPv4 instead of IPv6 or local-only sockets

specify TCP (byte-oriented) instead of UDP ('datagram' oriented)

connection setup: client — manual addresses

```
int sock_fd;

server = /* coo
sock_fd = socke
    AF_INET, /*
    SOCK_STREAM, /* byte-oriented */
    IPPROTO_TCP
);
if (sock_fd < 0) { /* handle error */ }

struct sockaddr_in addr;
addr.sin_family = AF_INET;
addr.sin_addr.s_addr = htonl(2156872459); /* 128.143.67.11 */
addr.sin_port = htons(80); /* port 80 */
if (connect(sock_fd, (struct sockaddr*) &addr, sizeof(addr)) {
    /* handle error */
}
DoClientStuff(sock_fd); /* read and write from sock_fd */
close(sock_fd);
```

htonl/s = host-to-network long/short
network byte order = big endian

connection setup: client — manual addresses

```
int sock_fd;

server = /
sock_fd =
    AF_INE
    SOCK_S
    IPPROTO_TCP
);
if (sock_fd < 0) { /* handle error */ }

struct sockaddr_in addr;
addr.sin_family = AF_INET;
addr.sin_addr.s_addr = htonl(2156872459); /* 128.143.67.11 */
addr.sin_port = htons(80); /* port 80 */
if (connect(sock_fd, (struct sockaddr*) &addr, sizeof(addr)) {
    /* handle error */
}
DoClientStuff(sock_fd); /* read and write from sock_fd */
close(sock_fd);
```

struct representing IPv4 address + port number
declared in <netinet/in.h>
see man 7 ip on Linux for docs

echo client/server

```
void client_for_connection(int socket_fd) {
    int n; char send_buf[MAX_SIZE]; char recv_buf[MAX_SIZE];
    while (prompt_for_input(send_buf, MAX_SIZE)) {
        n = write(socket_fd, send_buf, strlen(send_buf));
        if (n != strlen(send_buf)) {...error?...}
        n = read(socket_fd, recv_buf, MAX_SIZE);
        if (n <= 0) return; // error or EOF
        write(STDOUT_FILENO, recv_buf, n);
    }
}
```

```
void server_for_connection(int socket_fd) {
    int read_count, write_count; char request_buf[MAX_SIZE];
    while (1) {
        read_count = read(socket_fd, request_buf, MAX_SIZE);
        if (read_count <= 0) return; // error or EOF
        write_count = write(socket_fd, request_buf, read_count);
        if (read_count != write_count) {...error?...}
    }
}
```

echo client/server

```
void client_for_connection(int socket_fd) {
    int n; char send_buf[MAX_SIZE]; char recv_buf[MAX_SIZE];
    while (prompt_for_input(send_buf, MAX_SIZE)) {
        n = write(socket_fd, send_buf, strlen(send_buf));
        if (n != strlen(send_buf)) {...error?...}
        n = read(socket_fd, recv_buf, MAX_SIZE);
        if (n <= 0) return; // error or EOF
        write(STDOUT_FILENO, recv_buf, n);
    }
}
```

```
void server_for_connection(int socket_fd) {
    int read_count, write_count; char request_buf[MAX_SIZE];
    while (1) {
        read_count = read(socket_fd, request_buf, MAX_SIZE);
        if (read_count <= 0) return; // error or EOF
        write_count = write(socket_fd, request_buf, read_count);
        if (read_count != write_count) {...error?...}
    }
}
```

echo client/server

```
void client_for_connection(int socket_fd) {
    int n; char send_buf[MAX_SIZE]; char recv_buf[MAX_SIZE];
    while (prompt_for_input(send_buf, MAX_SIZE)) {
        n = write(socket_fd, send_buf, strlen(send_buf));
        if (n != strlen(send_buf)) {...error?...}
        n = read(socket_fd, recv_buf, MAX_SIZE);
        if (n <= 0) return; // error or EOF
        write(STDOUT_FILENO, recv_buf, n);
    }
}
```

```
void server_for_connection(int socket_fd) {
    int read_count, write_count; char request_buf[MAX_SIZE];
    while (1) {
        read_count = read(socket_fd, request_buf, MAX_SIZE);
        if (read_count <= 0) return; // error or EOF
        write_count = write(socket_fd, request_buf, read_count);
        if (read_count != write_count) {...error?...}
    }
}
```

connection setup: server, address setup

```
/* example (hostname, portname) = ("127.0.0.1", "443") */
const char *hostname; const char *portname;
...
struct addrinfo *server;
struct addrinfo hints;
int rv;

memset(&hints, 0, sizeof(hints));
hints.ai_family = AF_INET; /* for IPv4 */
/* or: */ hints.ai_family = AF_INET6; /* for IPv6 */
/* or: */ hints.ai_family = AF_UNSPEC; /* I don't care */
hints.ai_flags = AI_PASSIVE;

rv = getaddrinfo(hostname, portname, &hints, &server);
if (rv != 0) { /* handle error */ }
```

connection setup: server, address setup

```
/* example (hostname, portname) = ("127.0.0.1", "443") */
const char *hostname; const char *portname;
...
struct addrinfo *server;
struct addrinfo hints;
int rv;

memset(&hints, 0, sizeof(hints));
hints.ai_family = AF_INET; /* for IPv4 */
/* or: */ hints.ai_family = AF_INET6; /* for IPv6 */
/* or: */ hints.ai_family = AF_UNSPEC; /* I don't care */
hints.ai_flags =

rv = getaddrinfo                                    rver);
if (rv != 0) { /
```

hostname could also be NULL
means “use all possible addresses”
only makes sense for servers

connection setup: server, address setup

```
/* example (hostname, portname) = ("127.0.0.1", "443") */
const char *hostname; const char *portname;
...
struct addrinfo *server;
struct addrinfo hints;
int rv;

memset(&hints, 0, sizeof(hints));
hints.ai_family = AF_INET; /* for IPv4 */
/* or: */ hints.ai_family = AF_INET6; /* for IPv6 */
/* or: */ hints.ai_family = AF_UNSPEC; /* I don't care */
hints.ai_flags

rv = getaddrin                                    er);
if (rv != 0) {
```

portname could also be NULL
means “choose a port number for me”
only makes sense for servers

connection setup: server, address setup

```
/* example (hostname, portname) = ("127.0.0.1", "443") */
const char *ho
...
struct addrinfo *server;
struct addrinfo hints;
int rv;

memset(&hints, 0, sizeof(hints));
hints.ai_family = AF_INET; /* for IPv4 */
/* or: */ hints.ai_family = AF_INET6; /* for IPv6 */
/* or: */ hints.ai_family = AF_UNSPEC; /* I don't care */
hints.ai_flags = AI_PASSIVE;

rv = getaddrinfo(hostname, portname, &hints, &server);
if (rv != 0) { /* handle error */ }
```

AI_PASSIVE: “I’m going to use bind”

connection setup: server, addrinfo

```
struct addrinfo *server;
... getaddrinfo(...) ...

int server_socket_fd = socket(
    server->ai_family,
    server->ai_sockttype,
    server->ai_protocol
);

if (bind(server_socket_fd, ai->ai_addr, ai->ai_addr_len)) < 0) {
    /* handle error */
}
listen(server_socket_fd, MAX_NUM_WAITING);
...
int socket_fd = accept(server_socket_fd, NULL);
```

connection setup: client, using addrinfo

```
int sock_fd;
struct addrinfo *server = /* code on next slide */;

sock_fd = socket(
    server->ai_family,
     // ai_family = AF_INET (IPv4) or AF_INET6 (IPv6) or ...
    server->ai_socktype,
     // ai_socktype = SOCK_STREAM (bytes) or ...
    server->ai_prototcol
     // ai_protocol = IPPROTO_TCP or ...
);
if (sock_fd < 0) { /* handle error */ }
if (connect(sock_fd, server->ai_addr, server->ai_addrlen) < 0) {
    /* handle error */
}
freeaddrinfo(server);
DoClientStuff(sock_fd); /* read and write from sock_fd */
close(sock_fd);
```

connection setup: client, using addrinfo

```
int sock_fd;
struct addrinfo *server = /* code on next slide */;

sock_fd = socket(
    server->ai_family,
     // ai_family = AF_INET (IPv4) or AF_INET6 (IPv6) or ...
    server->ai_socktype,
     // ai_socktype = SOCK_STREAM (bytes) or ...
    server->ai_protocol,
     //
);
if (soc
if (cor                                                    < 0) {
    /*
}
freeaddrinfo(server);
DoClientStuff(sock_fd); /* read and write from sock_fd */
close(sock_fd);
```

addrinfo contains all information needed to setup socket

set by `getaddrinfo` function (next slide)

handles IPv4 and IPv6

handles DNS names, service names

connection setup: client, using addrinfo

```
int sock_fd;
struct addrinfo *server = /* code on next slide */;

sock_fd = socket(
    server->ai_family,
     // ai_family = AF_INET (IPv4) or AF_INET6 (IPv6) or ...
    server->ai_socktype,
     // ai_socktype = SOCK_STREAM (bytes) or ...
    server->ai_prototcol
     // ai_protocol = IPPROTO_TCP or ...
);
if (sock_fd < 0) { /* handle error */ }
if (connect(sock_fd, server->ai_addr, server->ai_addrlen) < 0) {
    /* handle error */
}
freeaddrinfo(server);
DoClientStuff(sock_fd); /* read and write from sock_fd */
close(sock_fd);
```

connection setup: client, using addrinfo

```
int sock_fd;
struct addrinfo *server; /* pointer to linked list */

sock_fd = socket(
    server->ai_family,
     // ai_family = AF_INET (IPv4) or AF_INET6 (IPv6) or ...
    server->ai_socktype,
     // ai_socktype = SOCK_STREAM (bytes) or ...
    server->ai_protocol
     // ai_protocol = IPPROTO_TCP or ...
);
if (sock_fd < 0) { /* handle error */ }
if (connect(sock_fd, server->ai_addr, server->ai_addrlen) < 0) {
    /* handle error */
}
freeaddrinfo(server);
DoClientStuff(sock_fd); /* read and write from sock_fd */
close(sock_fd);
```

ai_addr points to struct representing address
type of struct depends whether IPv6 or IPv4

connection setup: client, using addrinfo

```
int sock_fd;
st
so
    // ai_family = AF_INET (IPv4) or AF_INET6 (IPv6) or ...
    server->ai_socktype,
    // ai_socktype = SOCK_STREAM (bytes) or ...
    server->ai_prototcol
    // ai_protocol = IPPROTO_TCP or ...
);
if (sock_fd < 0) { /* handle error */ }
if (connect(sock_fd, server->ai_addr, server->ai_addrlen) < 0) {
    /* handle error */
}
freeaddrinfo(server);
DoClientStuff(sock_fd); /* read and write from sock_fd */
close(sock_fd);
```

since addrinfo contains pointers to dynamically allocated memory, call this function to free everything

connection setup: lookup address

```
/* example hostname, portname = "www.cs.virginia.edu", "443" */
const char *hostname; const char *portname;
...
struct addrinfo *server;
struct addrinfo hints;
int rv;
memset(&hints, 0, sizeof(hints));
hints.ai_family = AF_UNSPEC; /* for IPv4 OR IPv6 */
// hints.ai_family = AF_INET4; /* for IPv4 only */

hints.ai_socktype = SOCK_STREAM; /* byte-oriented --- TCP */
rv = getaddrinfo(hostname, portname, &hints, &server);
if (rv != 0) { /* handle error */ }

/* eventually freeaddrinfo(result) */
```

connection setup: lookup address

```
/* example hostname, portname = "www.cs.virginia.edu", "443" */
const char *hostname; const char *portname;
...
struct addrinfo *server;
struct addrinfo hints;
int rv;
memset(&hints, 0, sizeof(hints));
hints.ai_family = AF_UNSPEC; /* for IPv4 OR IPv6 */
// hints.ai_family = AF_INET4; /* for IPv4 only */
hints.ai_socktype = SOCK_STREAM; /* byte-oriented --- TCP */
rv = getaddrinfo(hostname, portname, &hints, &server);
if (rv != 0) { /* handle error */ }

/* eventually freeaddrinfo(result) */
```

NB: pass pointer *to pointer* to addrinfo to fill in

connection setup: lookup address

```
/* example hostname, portname = "www.cs.virginia.edu", "443" */
const
...
struct
struct
int rv;
memset(&hints, 0, sizeof(hints));
hints.ai_family = AF_UNSPEC; /* for IPv4 OR IPv6 */
// hints.ai_family = AF_INET4; /* for IPv4 only */

hints.ai_socktype = SOCK_STREAM; /* byte-oriented --- TCP */
rv = getaddrinfo(hostname, portname, &hints, &server);
if (rv != 0) { /* handle error */ }

/* eventually freeaddrinfo(result) */
```

AF_UNSPEC: choose between IPv4 and IPv6 for me

AF_INET, AF_INET6: choose IPv4 or IPV6 respectively

connection setup: multiple server addresses

```
struct addrinfo *server;
...
rv = getaddrinfo(hostname, portname, &hints, &server);
if (rv != 0) { /* handle error */ }

for (struct addrinfo *current = server; current != NULL;
      current = current->ai_next) {
    sock_fd = socket(current->ai_family, current->ai_socktype, curr
    if (sock_fd < 0) continue;
    if (connect(sock_fd, current->ai_addr, current->ai_addrlen) ==
        break;
    }
    close(sock_fd); // connect failed
}
freeaddrinfo(server);
DoClientStuff(sock_fd);
close(sock_fd);
```

connection setup: multiple server addresses

```
struct addrinfo *server;
...
rv = getaddrinfo(hostname, portname, &hints, &server);
if (rv != 0) { /* handle error */ }

for (struct addrinfo *current = server; current != NULL;
       current = current->ai_next) {
    sock_fd = socket(current->ai_family, current->ai_socktype, curr
    if (sock_fd < 0) continue;
    if (connect(sock_fd, current->ai_addr, current->ai_addrlen) ==
        break;
    }
    clos
}
freeaddr
DoClient
close(so
```

addrinfo is a linked list

name can correspond to multiple addresses

example: redundant copies of web server

example: an IPv4 address and IPv6 address

example: wired + wireless connection on one machine

connection setup: old lookup function

```
/* example hostname, portnum= "www.cs.virginia.edu", 443*/
const char *hostname; int portnum;
...
struct hostent *server_ip;
server_ip = gethostbyname(hostname);

if (server_ip == NULL) { /* handle error */ }

struct sockaddr_in addr;
addr.s_addr = *(struct in_addr*) server_ip->h_addr_list[0];
addr.sin_port = htons(portnum);
sock_fd = socket(AF_INET, SOCK_STREAM, IPPROTO_TCP);
connect(sock_fd, &addr, sizeof(addr));
...
```

aside: on server port numbers

Unix convention: must be `root` to use ports 0–1023

root = superuser = 'adminstrator user' = what sudo does

so, for testing: probably ports > 1023