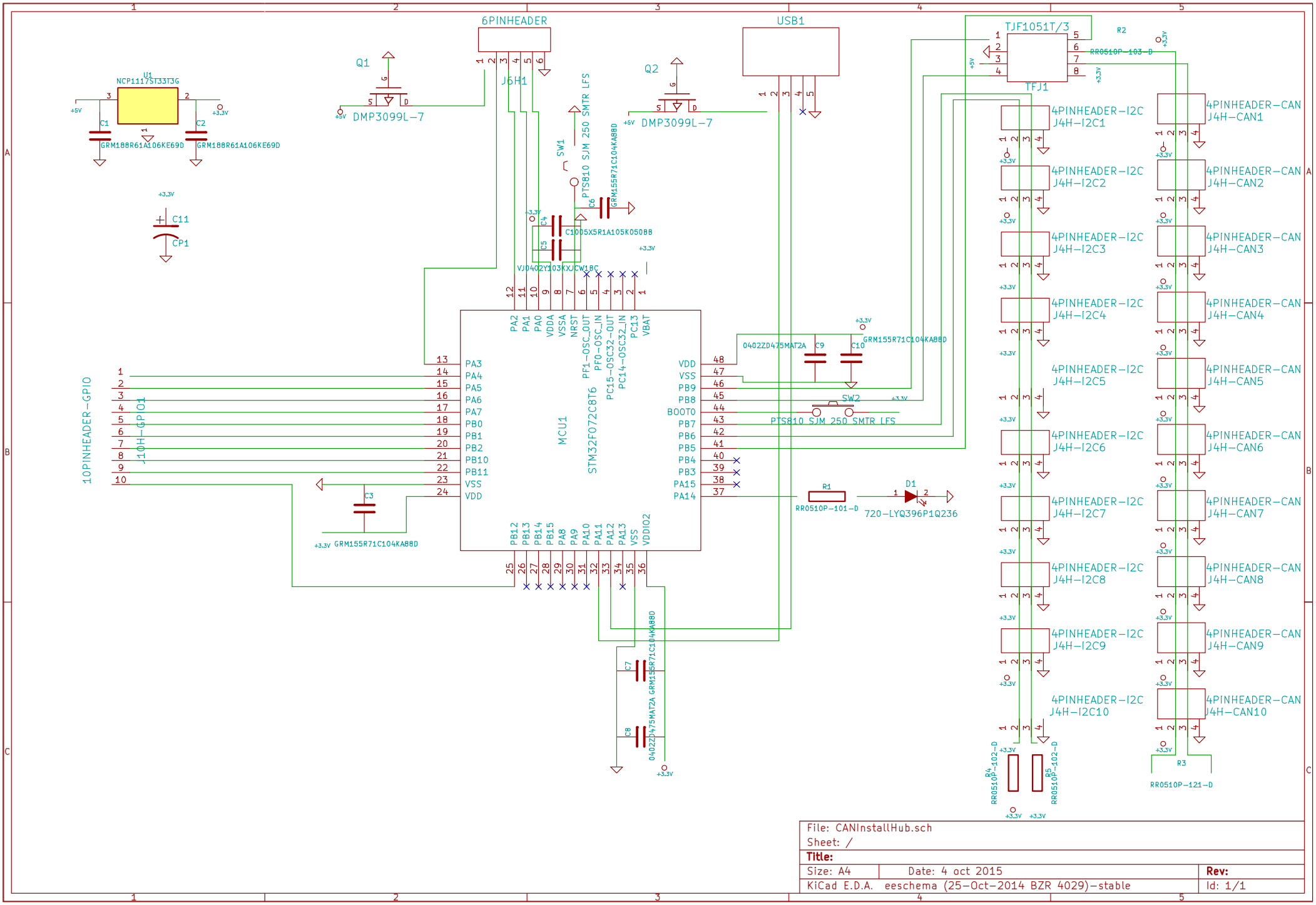

File: CANInstallHub.sch		
Sheet: /		
Title:		
Size: A4	Date: 4 oct 2015	**Rev:**
KiCad E.D.A. eeschema (25-Oct-2014 BZR 4029)-stable		Id: 1/1