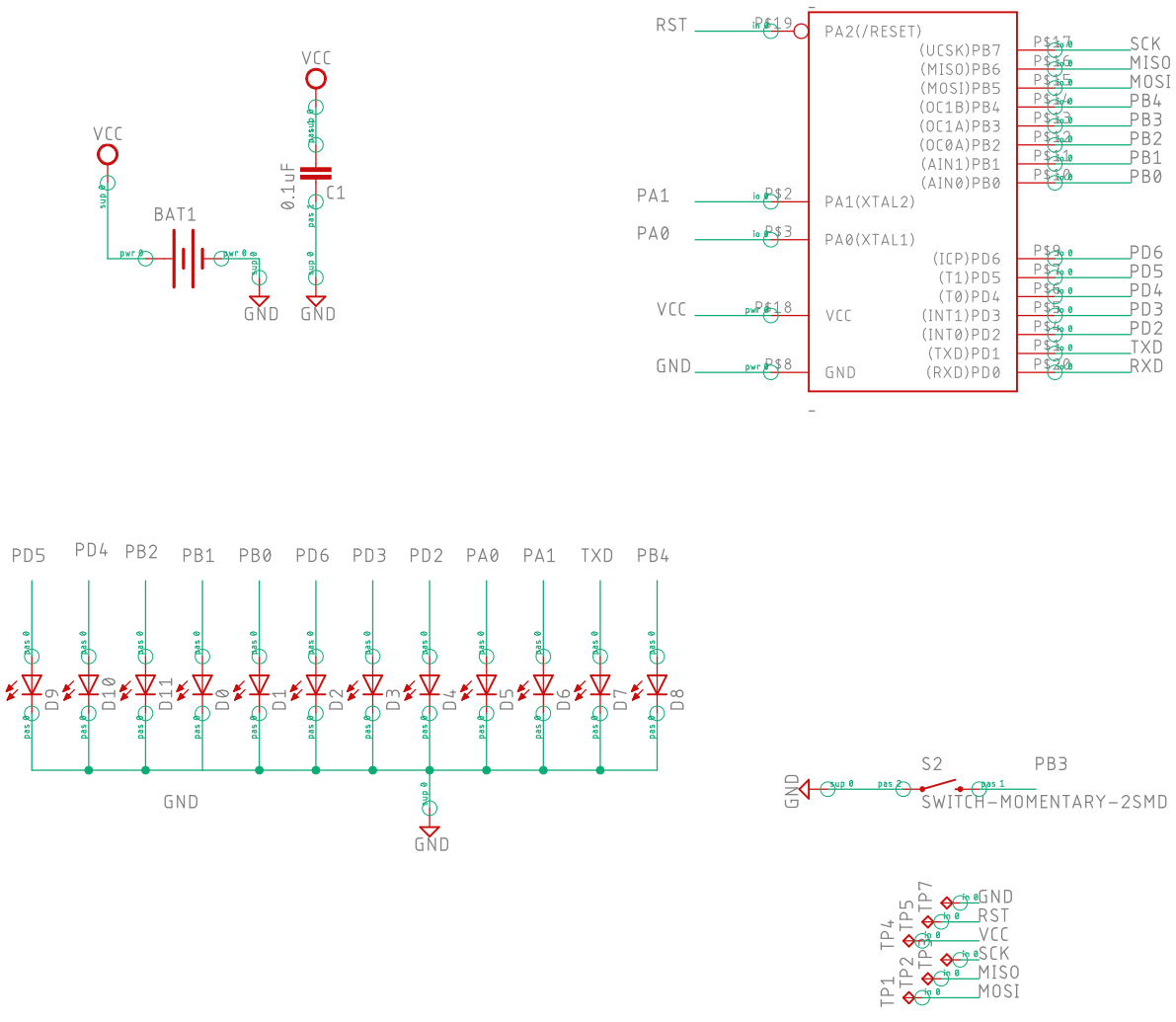
VCC
BAT1
GND
VCC
0.1uF
C1
GND
RST
PA1
PA0
VCC
GND
PA2(/RESET)
(UCSK)PB7
(MISO)PB6
(MOSI)PB5
(OC1B)PB4
(OC1A)PB3
(OC0A)PB2
(AIN1)PB1
(AIN0)PB0
PA1(XTAL2)
PA0(XTAL1)
VCC
GND
(ICP)PD6
(T1)PD5
(T0)PD4
(INT1)PD3
(INT0)PD2
(TXD)PD1
(RXD)PD0
SCK
MISO
MOSI
PB4
PB3
PB2
PB1
PB0
PD6
PD5
PD4
PD3
PD2
TXD
RXD
PD5 PD4 PB2 PB1 PB0 PD6 PD3 PD2 PA0 PA1 TXD PB4
D9 D10 D11 D0 D1 D2 D3 D4 D5 D6 D7 D8
GND
GND
GND
S2
PB3
SWITCH-MOMENTARY-2SMD
TP1 TP2 TP3 TP4 TP5 TP7
GND
RST
VCC
SCK
MISO
MOSI