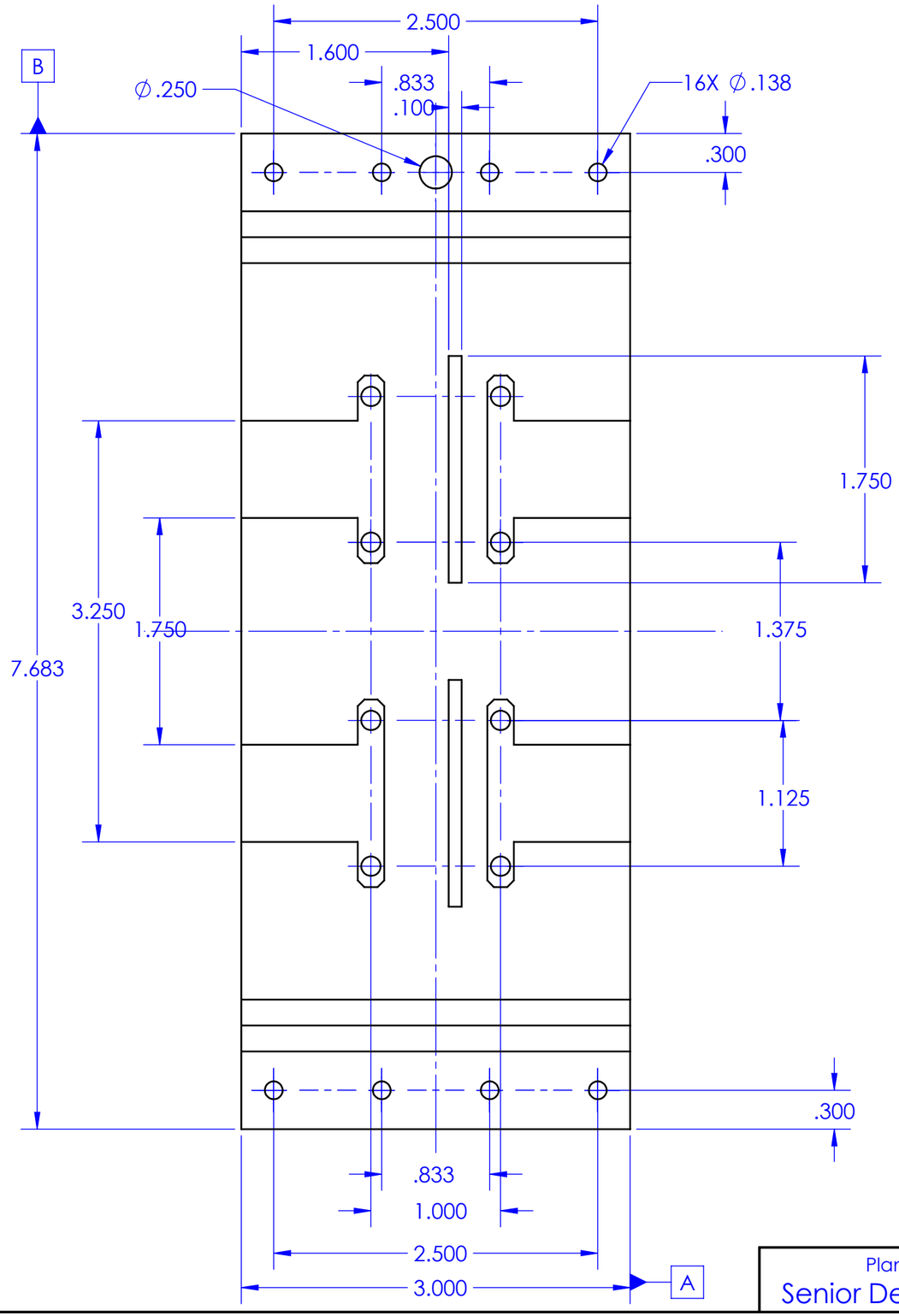

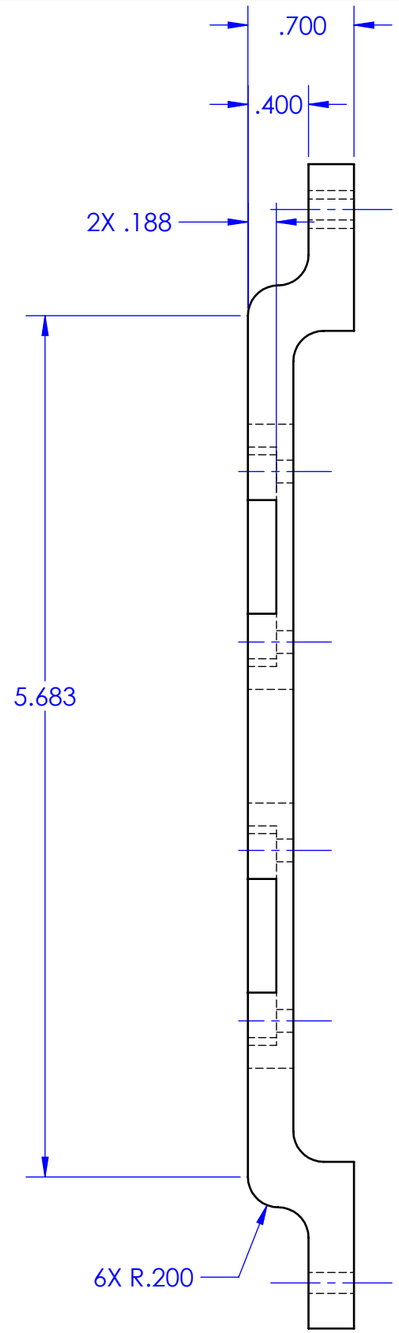

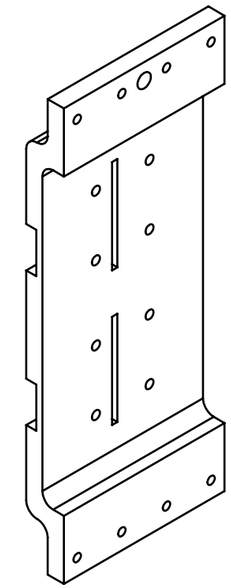

NOTE:
ALL UNITS IN INCHES
TOLERANCES:
UNLESS OTHERWISE SPECIFIED
X.XXX ±.005"
MATERIAL: PLASTIC

Planarizer Senior Design Project	Lab Section:	PART #: 00_04_02	Title: MAIN LEG MOUNT PLATE		Drwn. By: ERIC RAMOS
	Dwg. #:	Nxt Asb:	Date: 3/13/22	Scale: 1:1	Chkd. By: TIM JAIN

SOLIDWORKS Educational Product. For Instructional Use Only.