6. NOISE KILL (CHAPTER 6)

6.1. DRIVER'S HEATER WITH DEFROST HEATER

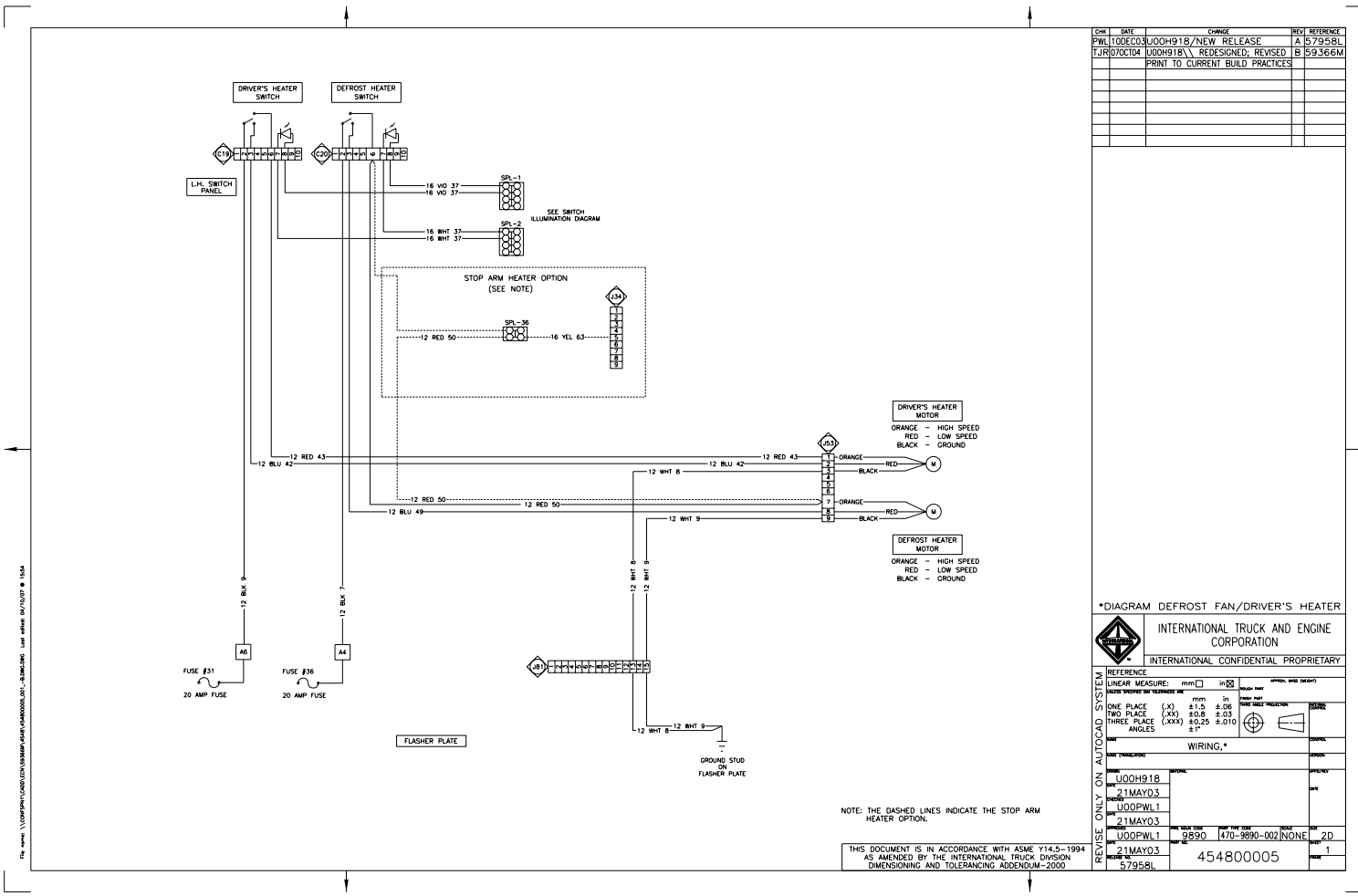

Figure 191 Driver's Heater with Defrost Heater

6.2. BOTTOM STEP HEATER

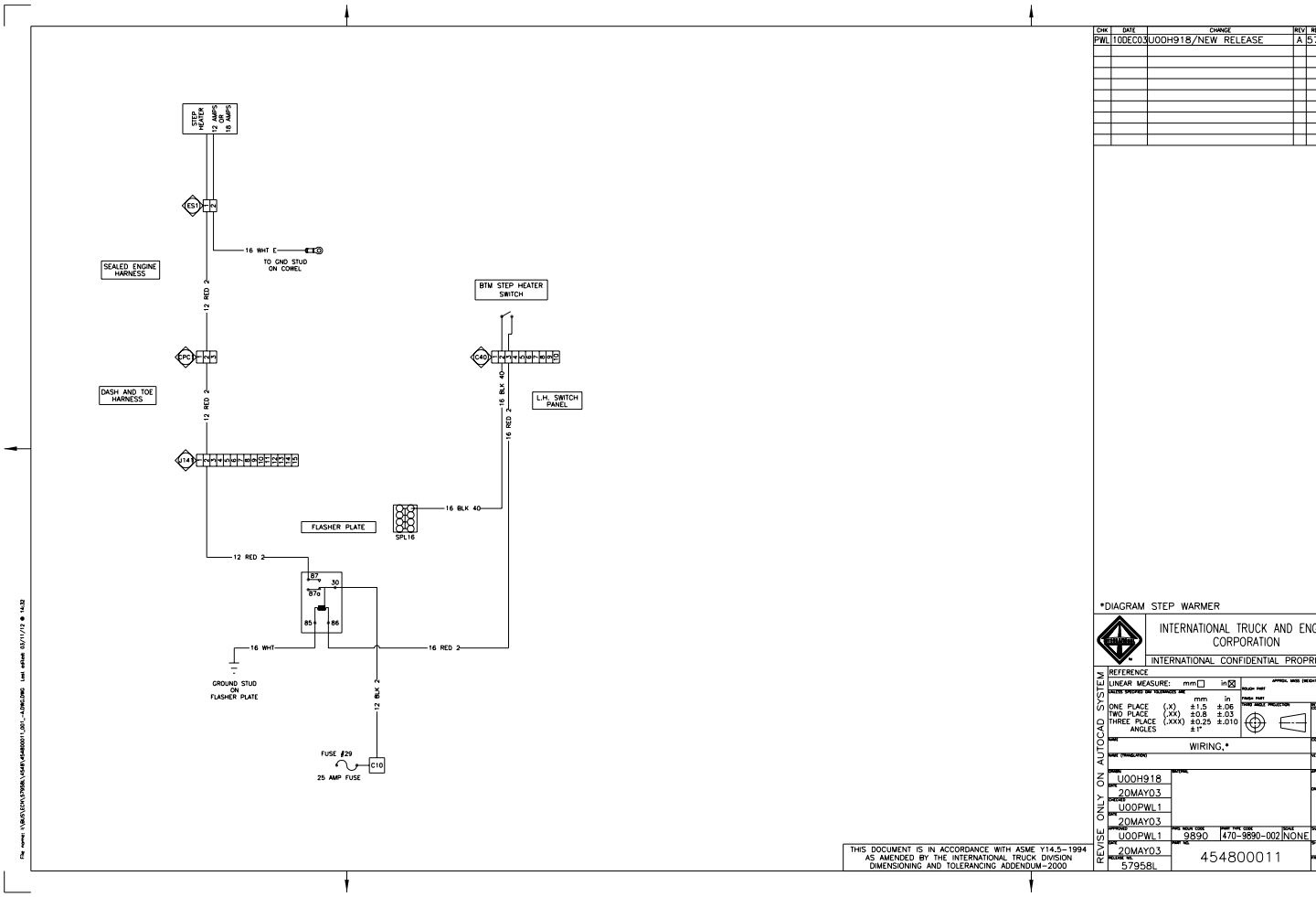

Figure 192 Bottom Step Heater

6.3. POWER VENT, FR / RR

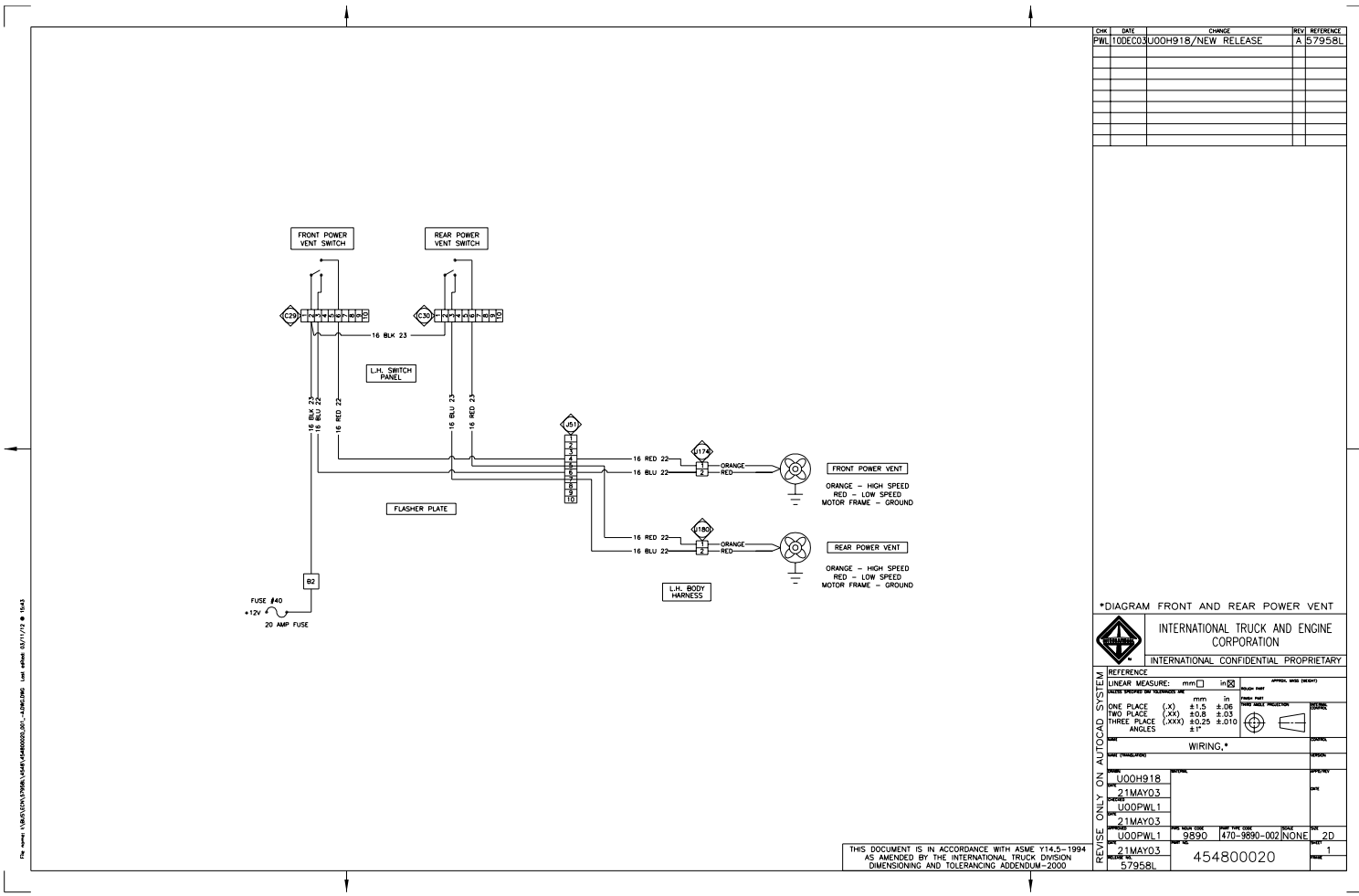

Figure 193 Power Vent, FR / RR

6.4. STEPWELL HEATER FAN

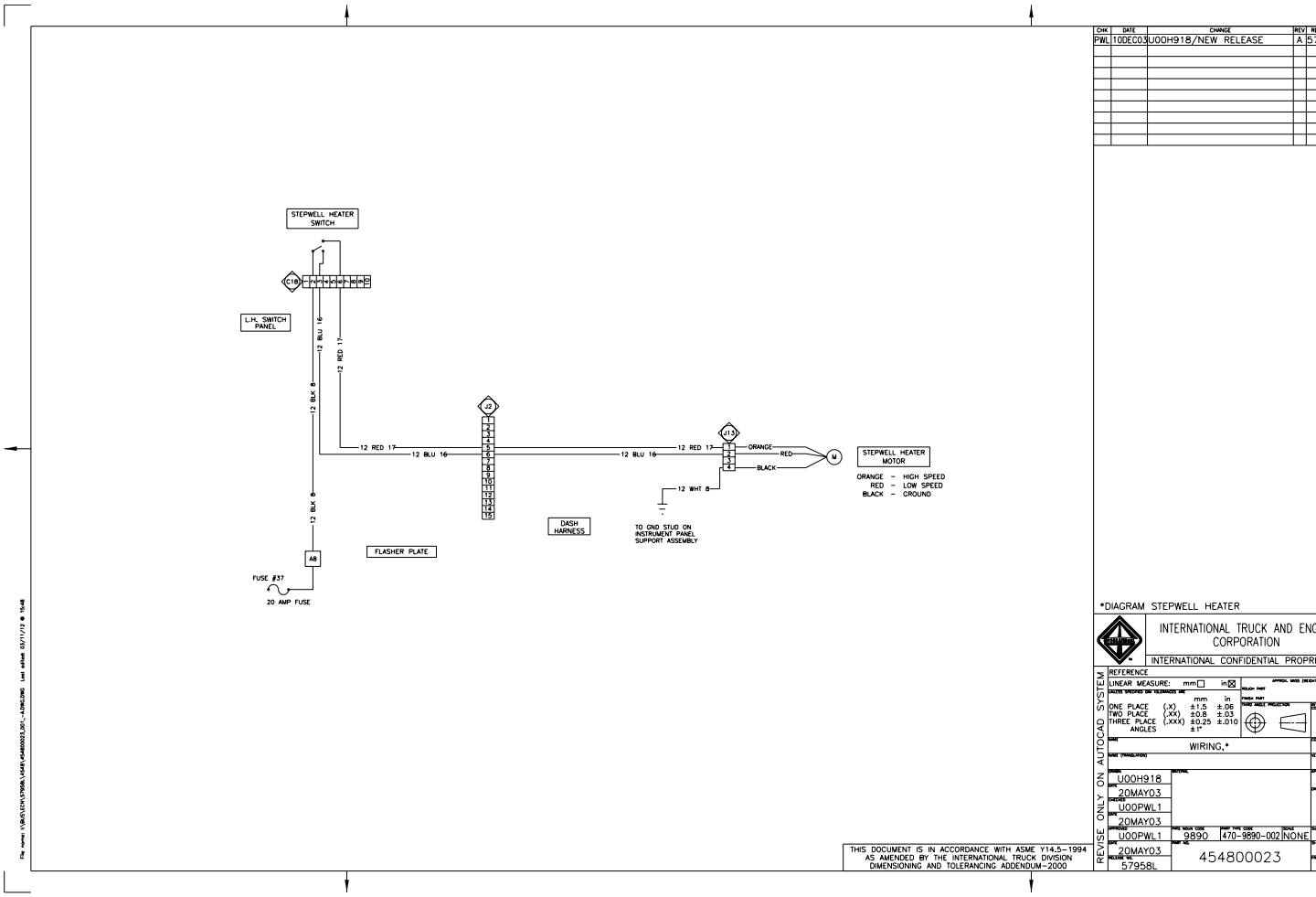

Figure 194 Stepwell Heater Fan

6.5. MIDSHIP AUX HEATER, LH — SINGLE SWITCH

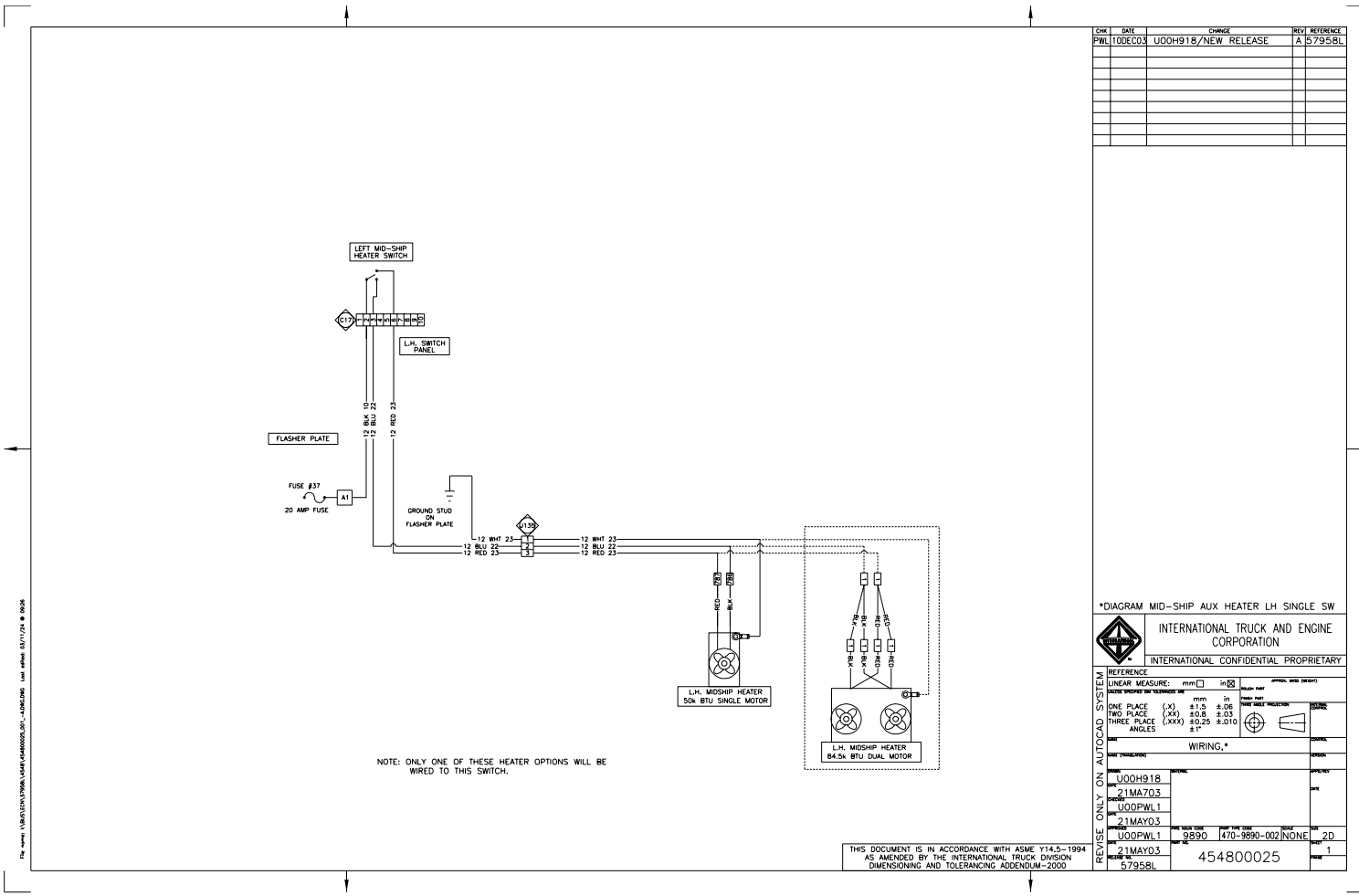

Figure 195 Midship Aux Heater, LH — Single Switch

6.6. MIDSHIP AUX HEATER, LH — DUAL SWITCH

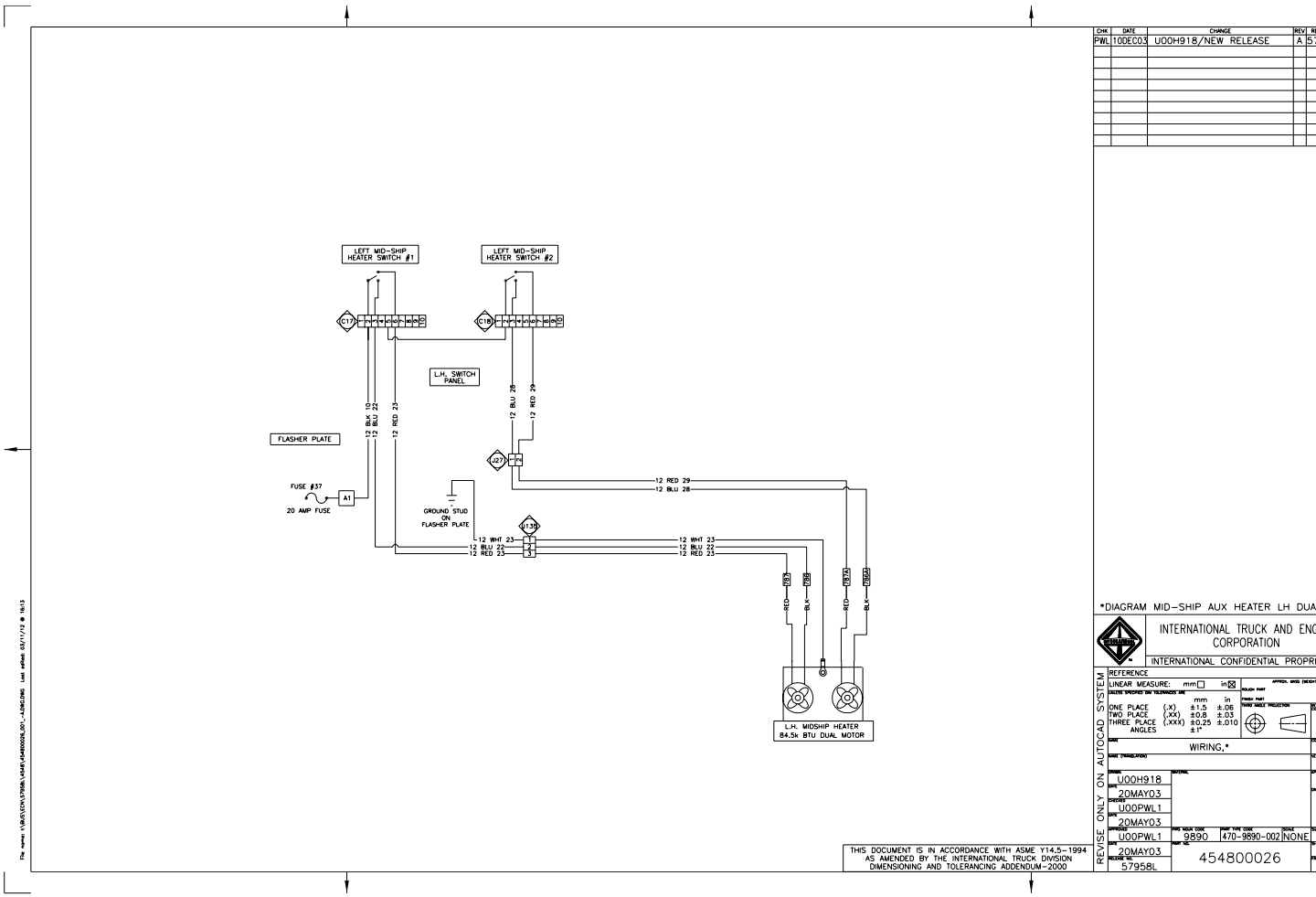

Figure 196 Midship Aux Heater, LH — Dual Switch

6.7. MIDSHIP AUX HEATER, RH — SINGLE SWITCH

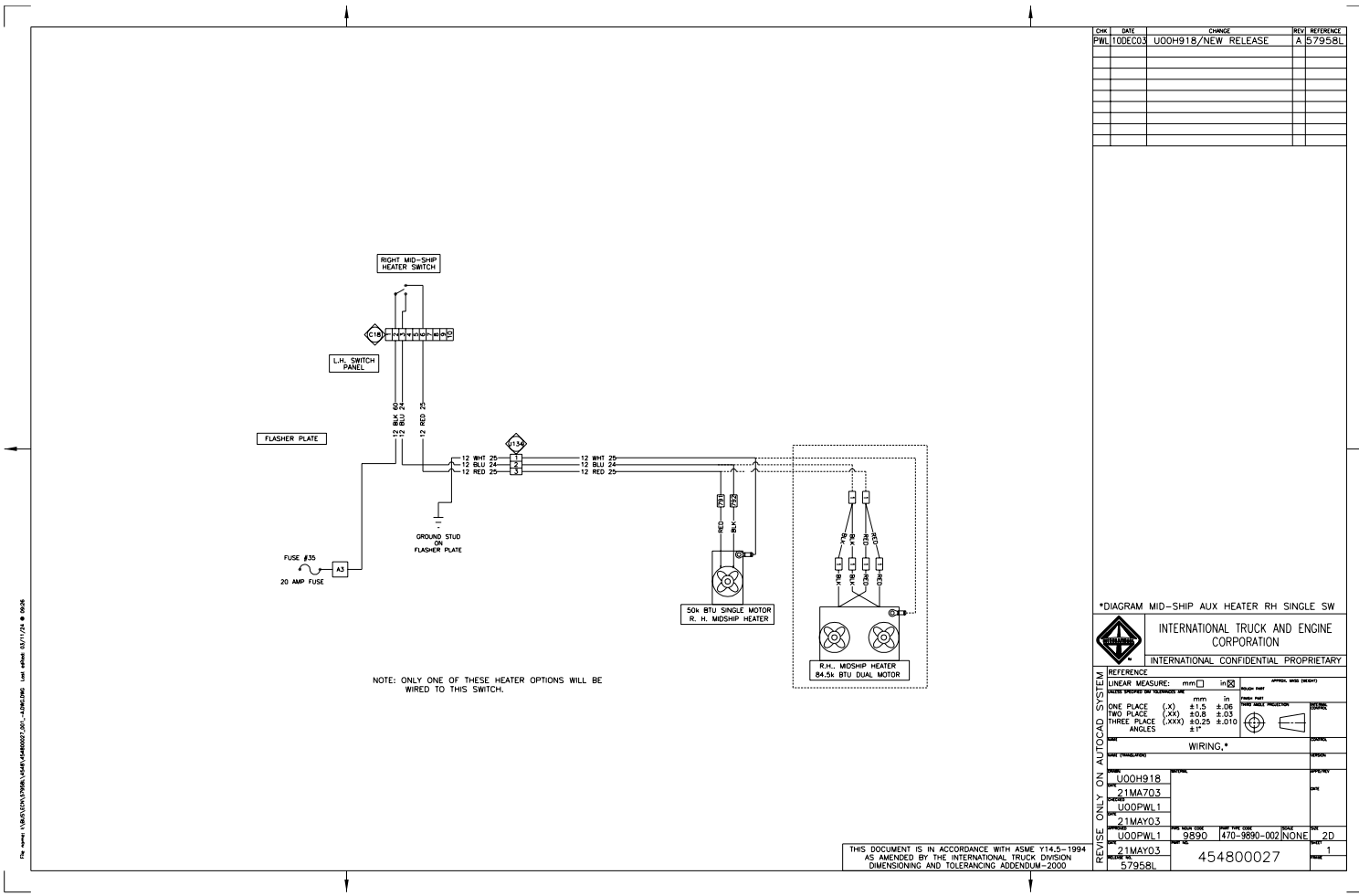

Figure 197 Midship Aux Heater, RH — Single Switch

6.8. MIDSHIP AUX HEATER, RH — DUAL SWITCH

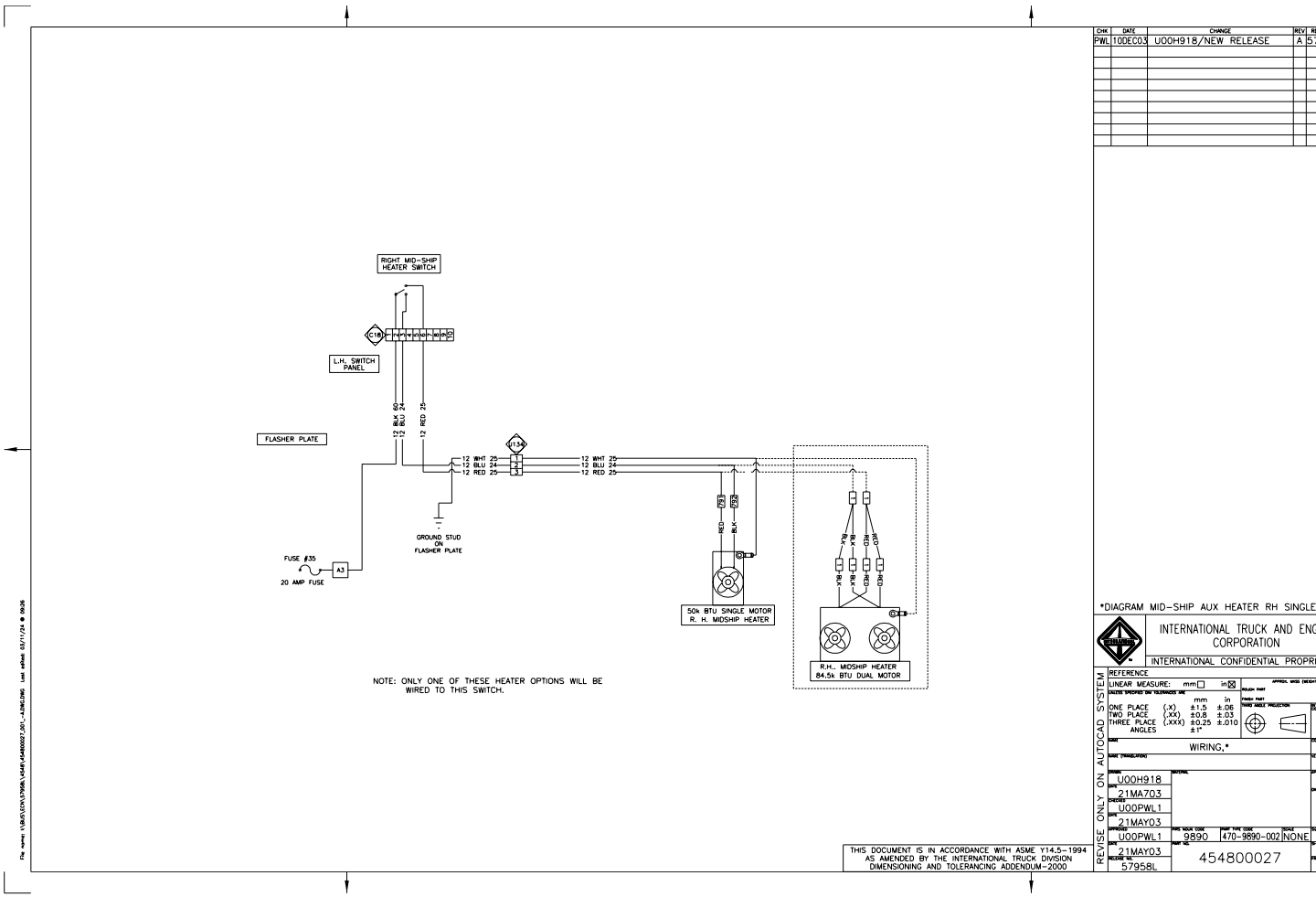

Figure 198 Midship Aux Heater, RH — Dual Switch

6.9. REAR AUX HEATER, LH — SINGLE SWITCH

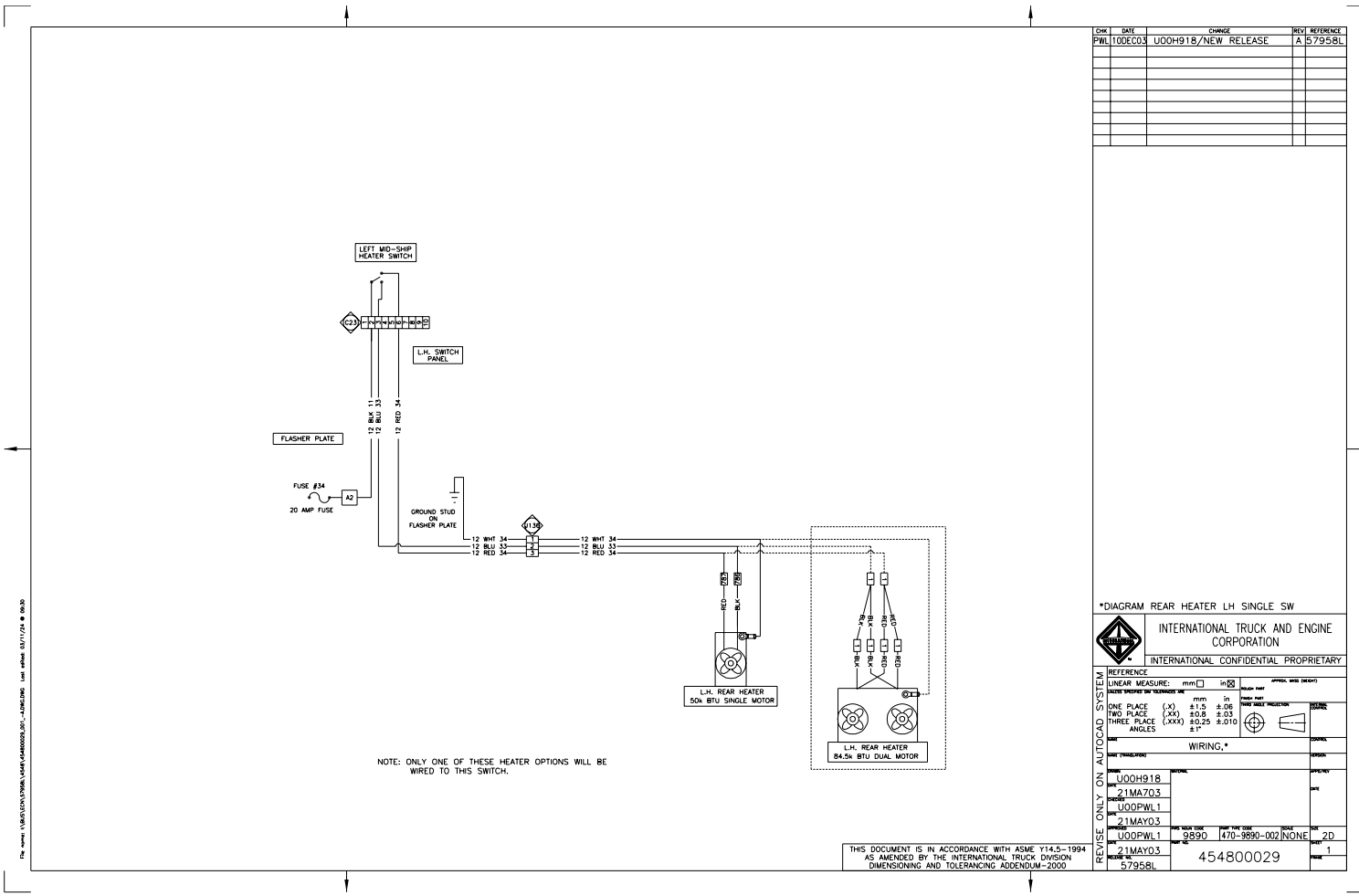

Figure 199 Rear Aux Heater, LH — Single Switch

6.10. REAR AUX HEATER, LH — DUAL SWITCH

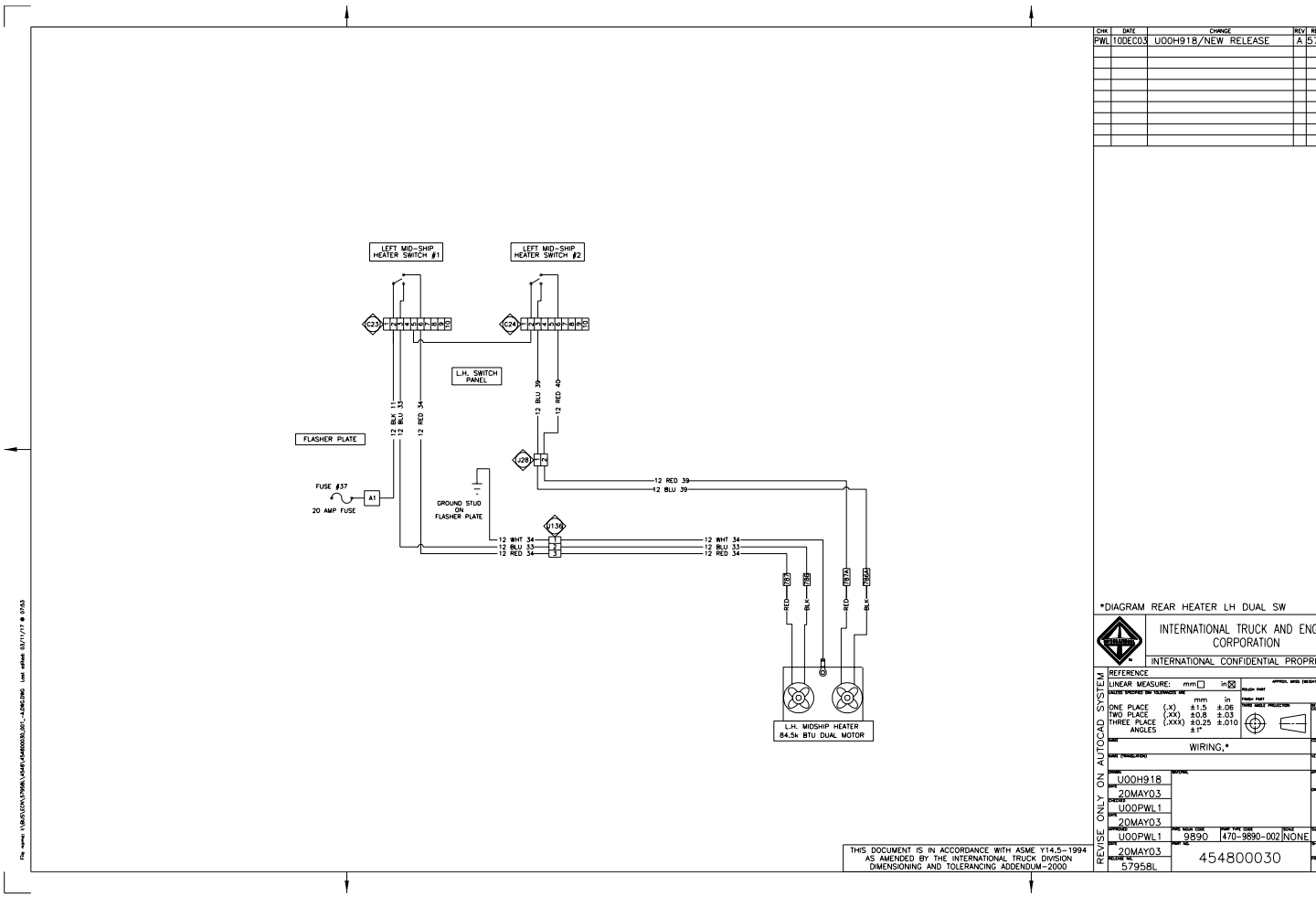

Figure 200 Rear Aux Heater, LH — Dual Switch

6.11. REAR AUX HEATER, RH — SINGLE SWITCH

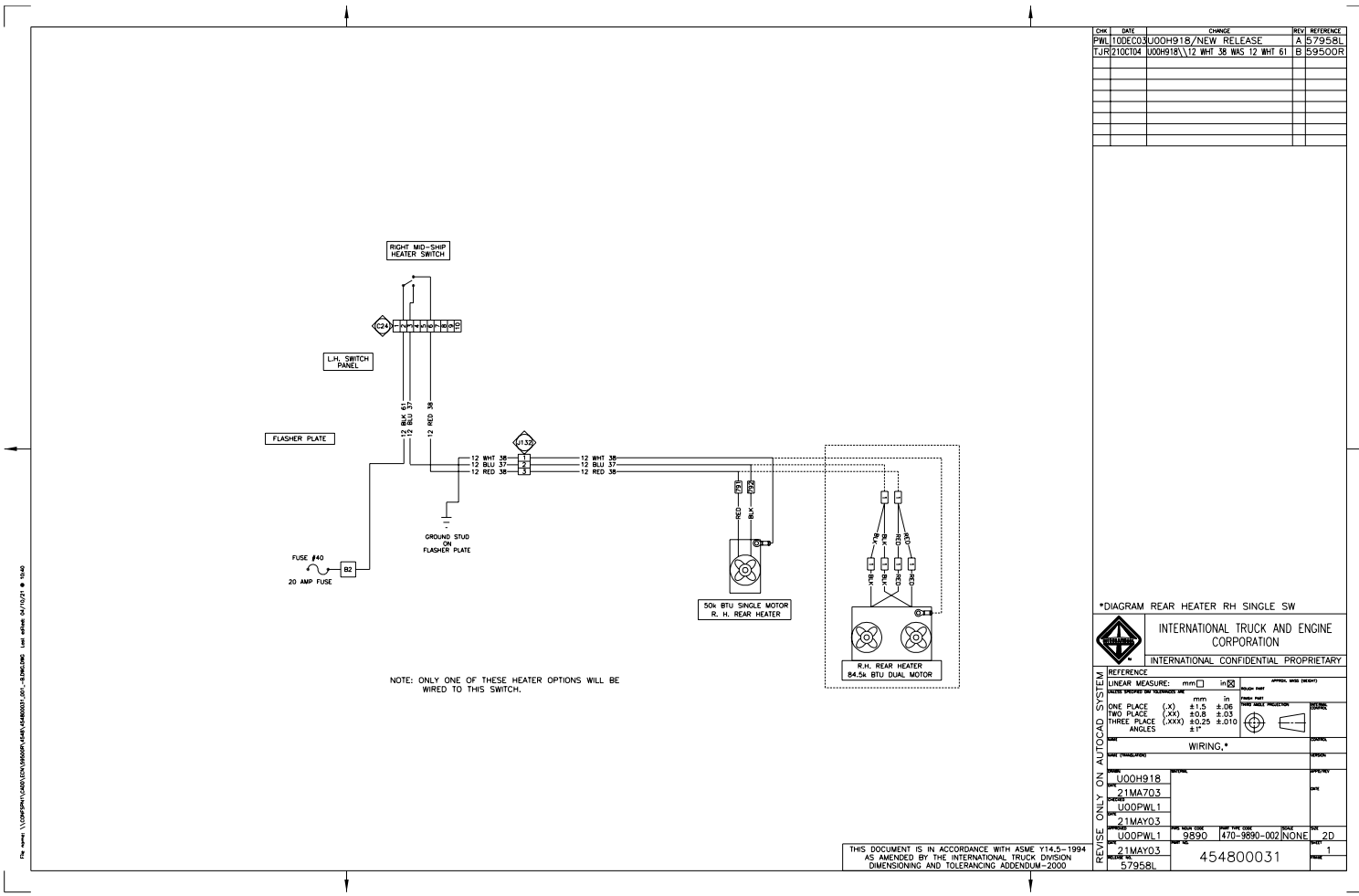

Figure 201 Rear Aux Heater, RH — Single Switch

6.12. REAR AUX HEATER, RH — DUAL SWITCH

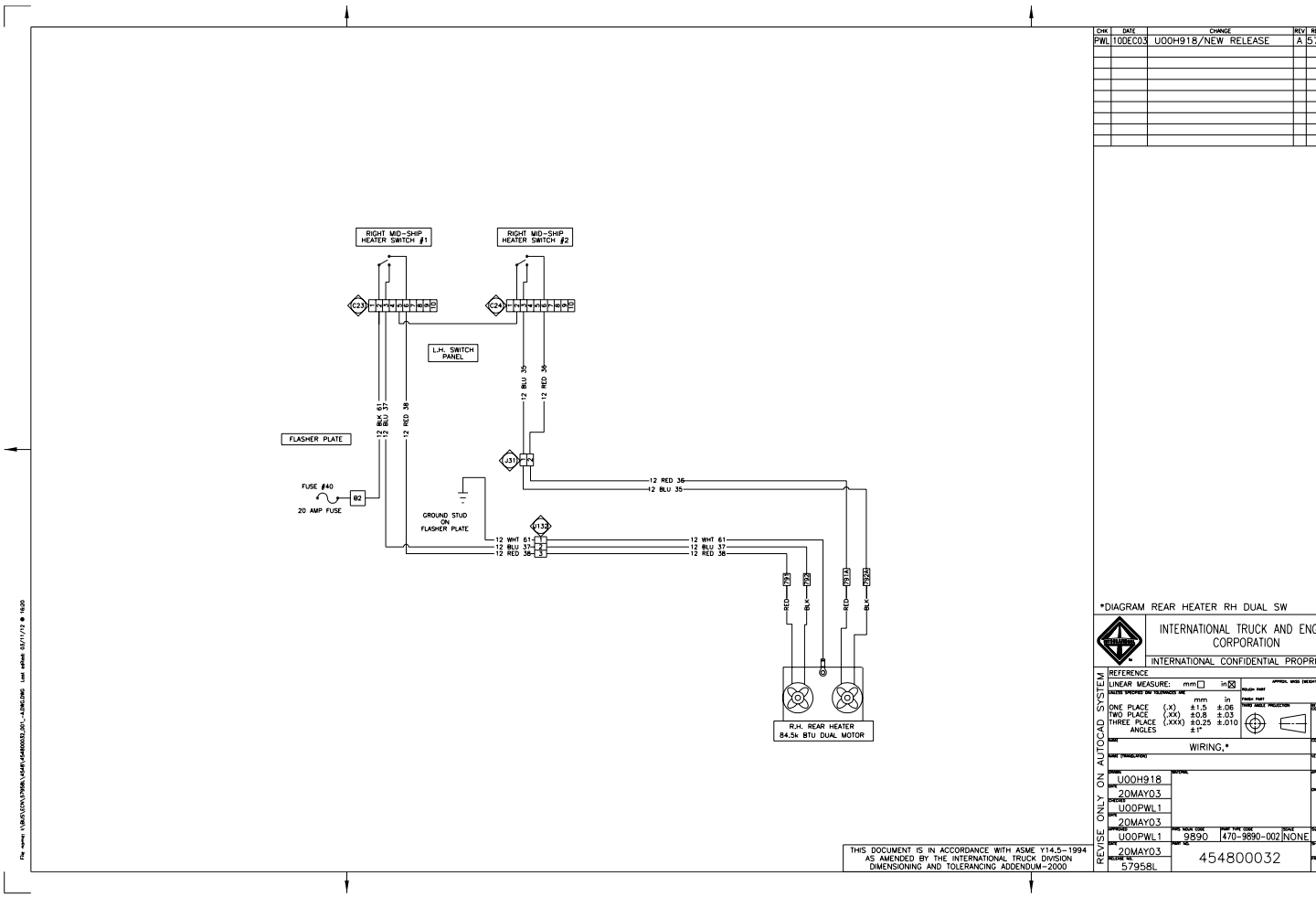

Figure 202 Rear Aux Heater, RH — Dual Switch

6.13. STEPWELL HEATER FAN WIRED TO DEFROST SWITCH

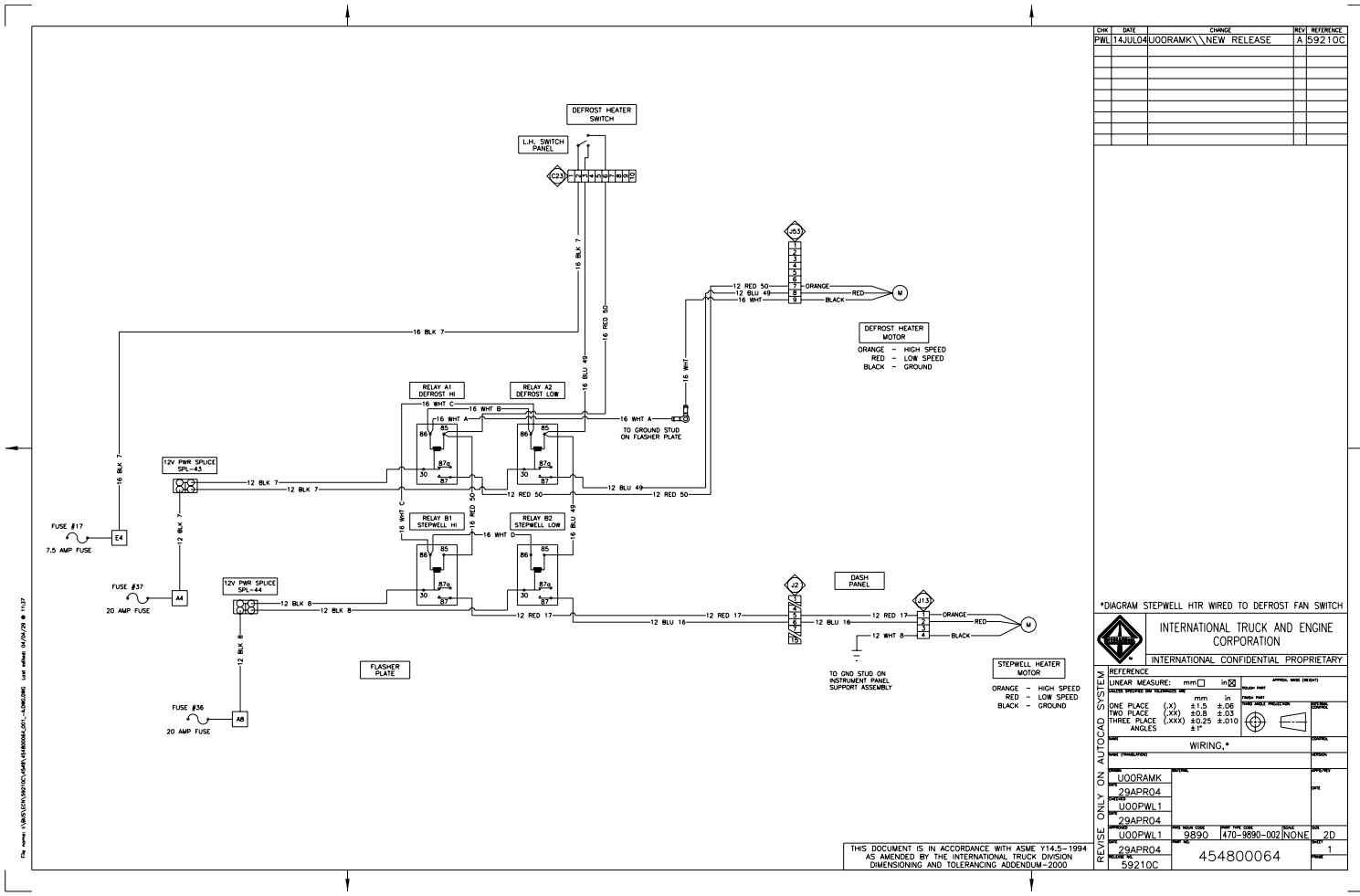

Figure 203 Stepwell Heater Fan Wired to Defrost Switch

6.14. LEFT DEFOG FAN DIAGRAM

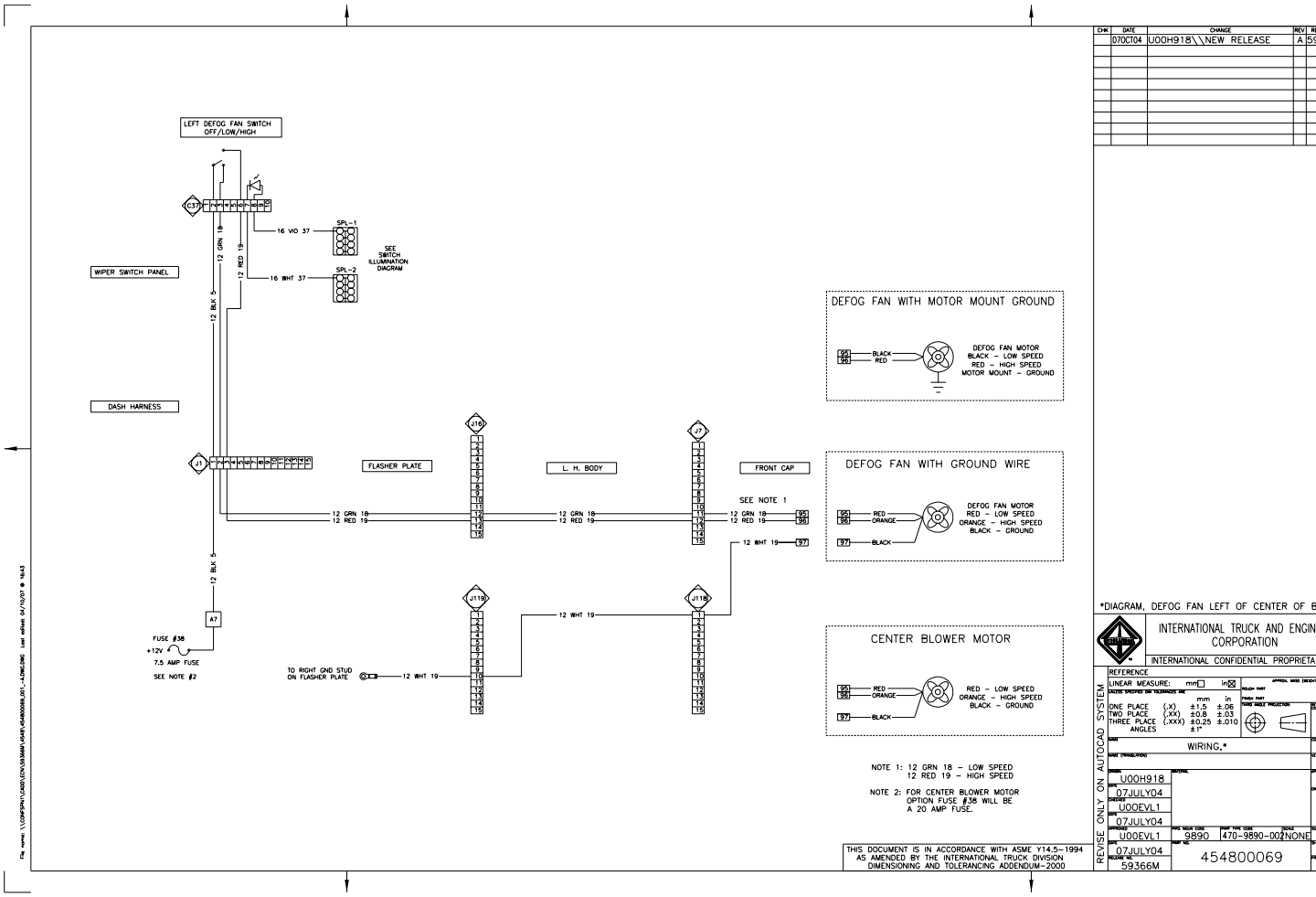

Figure 204 Left Defog Fan Diagram

6.15. RIGHT OF CENTER DEFOG FAN DIAGRAM

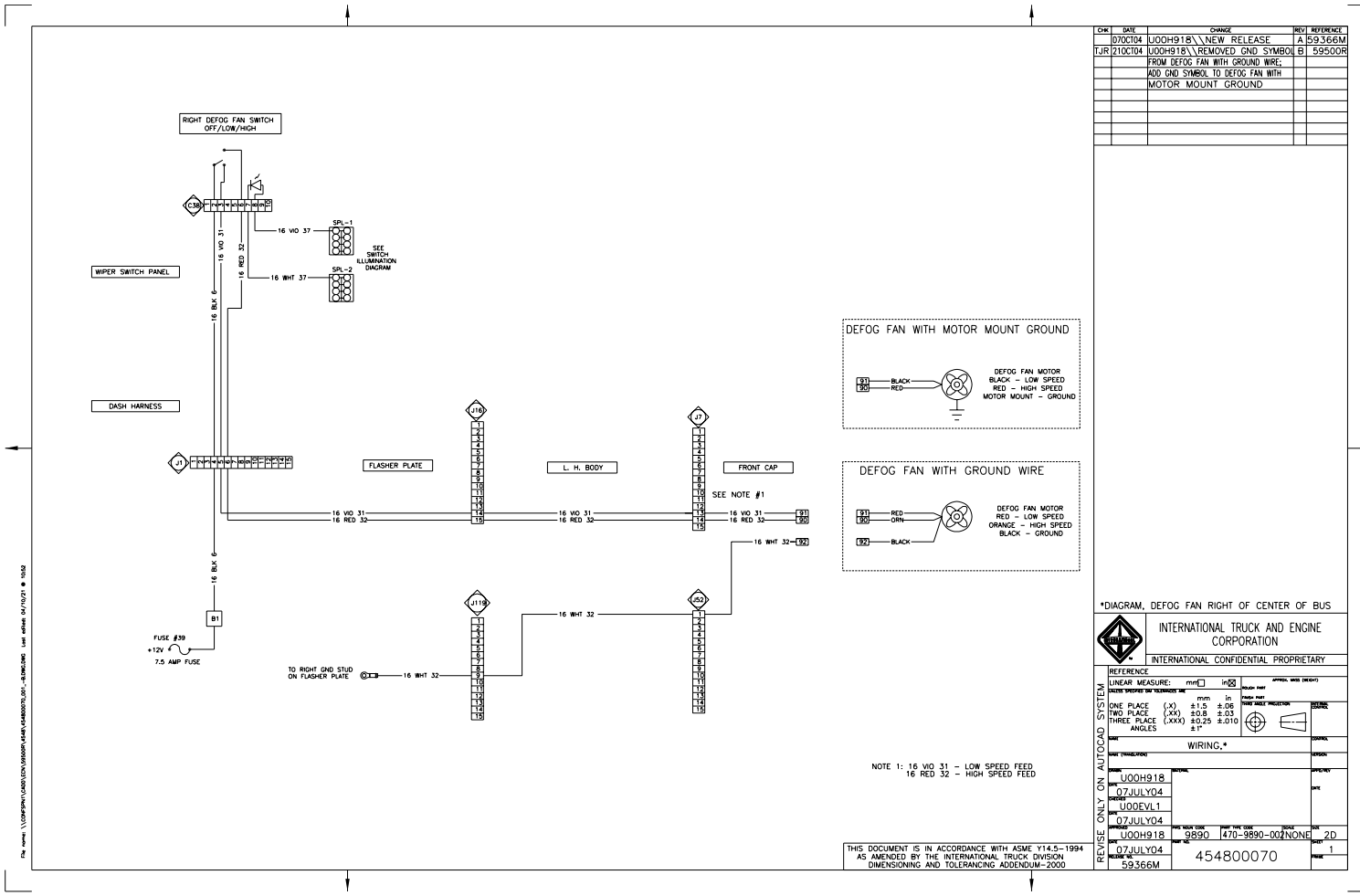

Figure 205 Right of Center Defog Fan Diagram

6.16. FAR RIGHT DEFOG FAN DIAGRAM

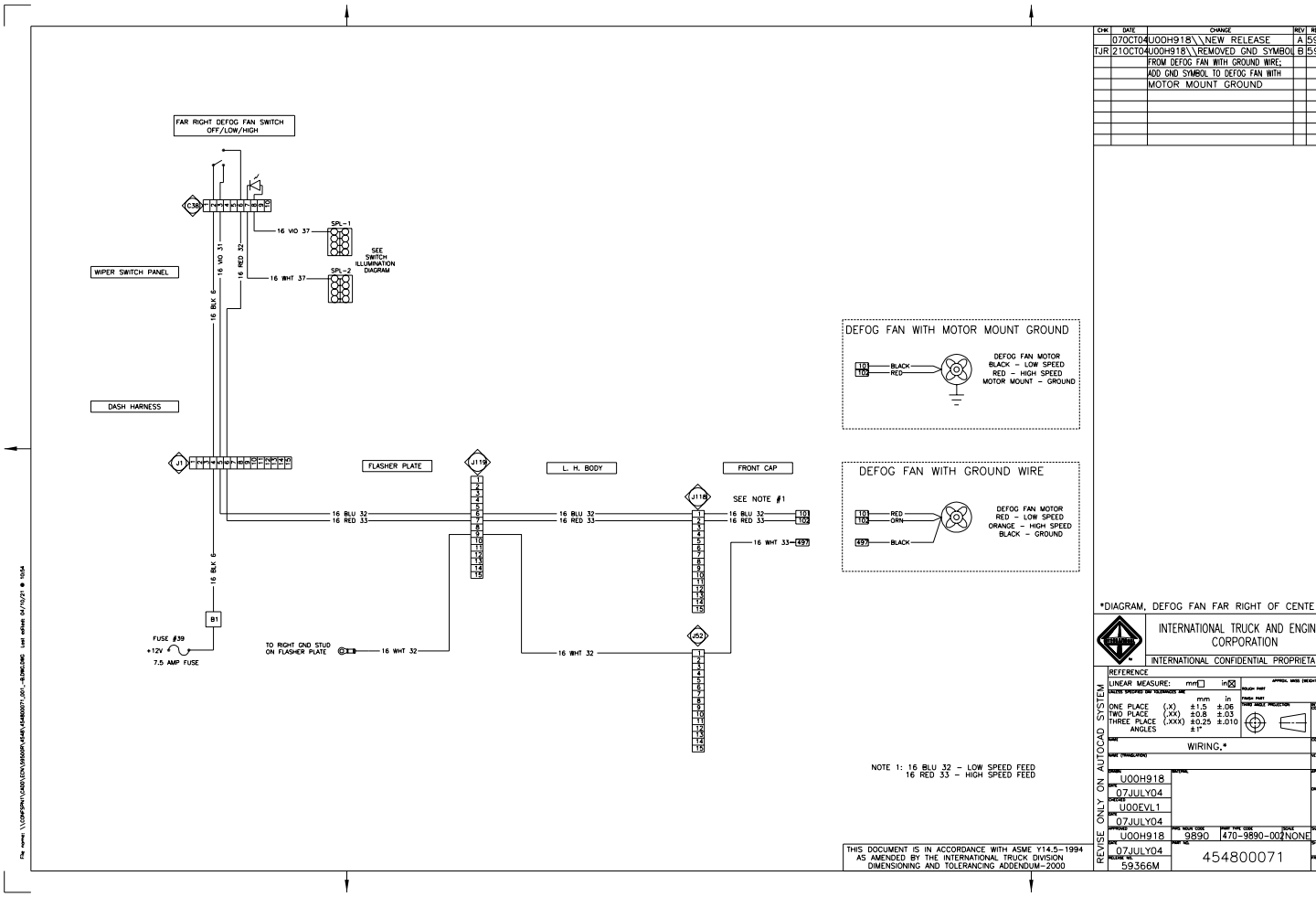

Figure 206 Far Right Defog Fan Diagram

6.17. FAR LEFT AND LEFT OF CENTER DEFOG FAN DIAGRAM

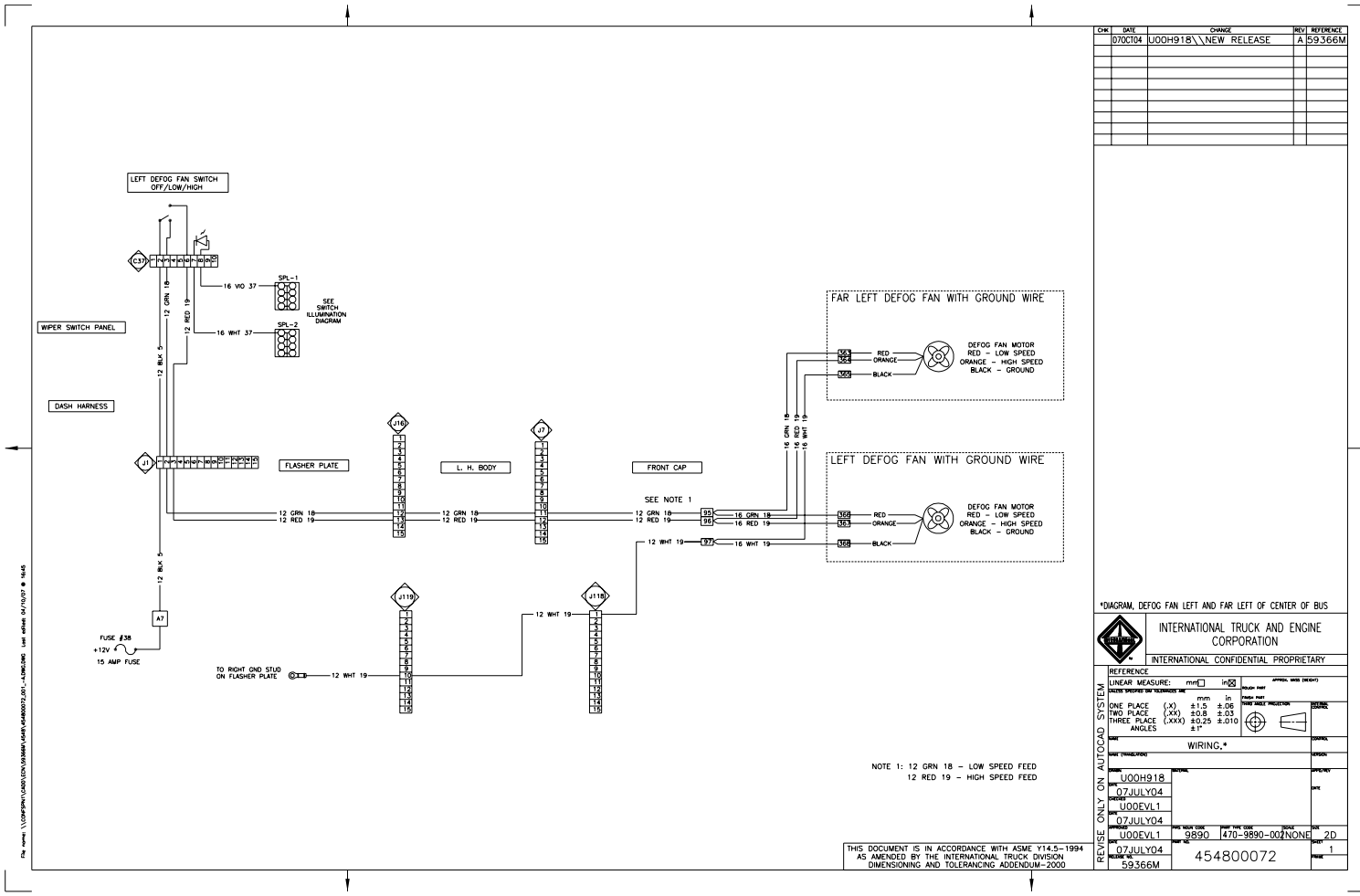

Figure 207 Far Left and Left of Center Defog Fan Diagram

6.18. RADIO DASH MOUNTED

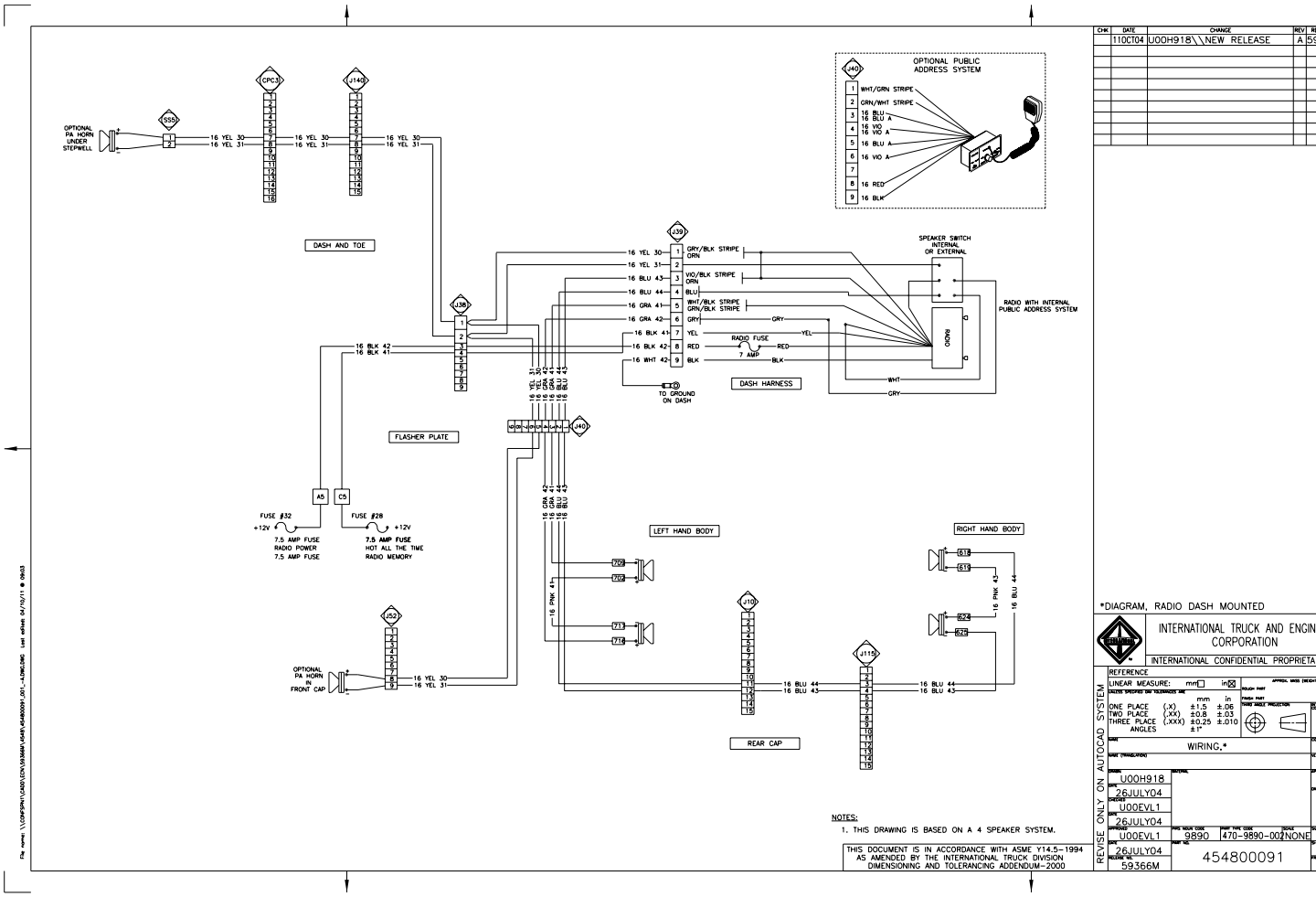

Figure 208 Radio Dash Mounted

6.19. RADIO MOUNTED OVERHEAD

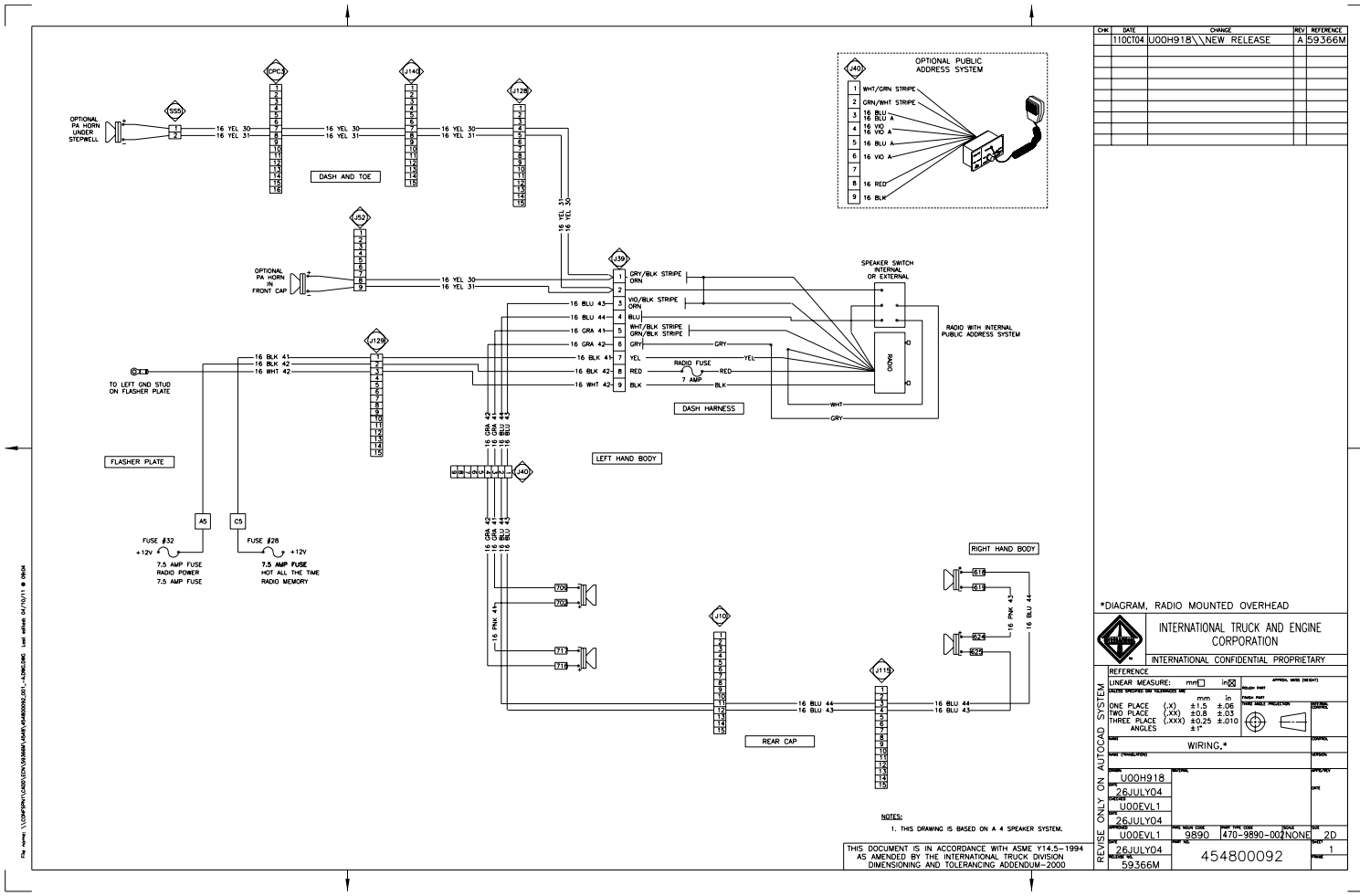

Figure 209 Radio Mounted Overhead

6.20. CONVECTION HEATER

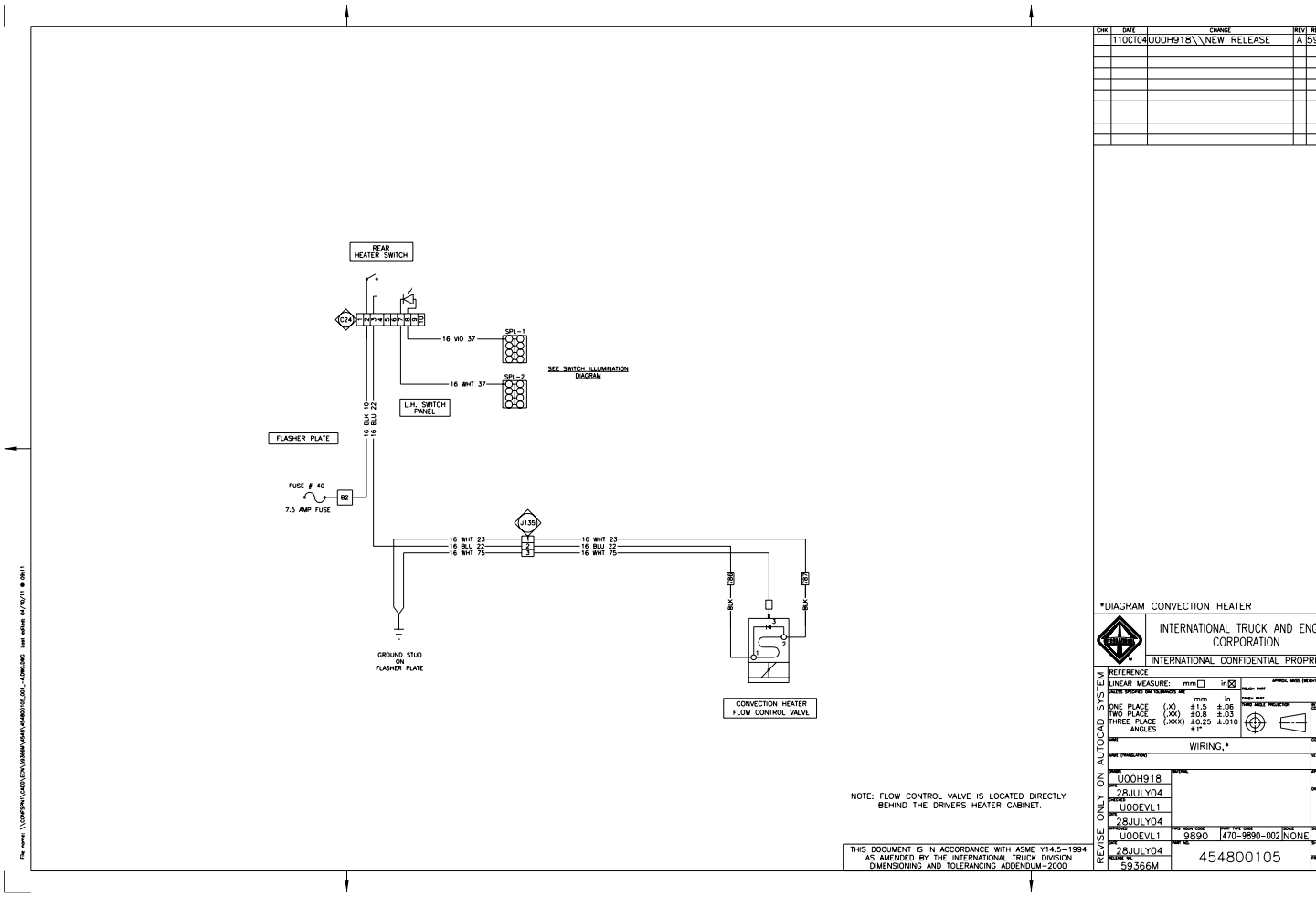

Figure 210 Convection Heater

7. INTERIOR LIGHTING (CHAPTER 7)

7.1. DOME LIGHTS LH/RH SIDES SINGLE SWITCH

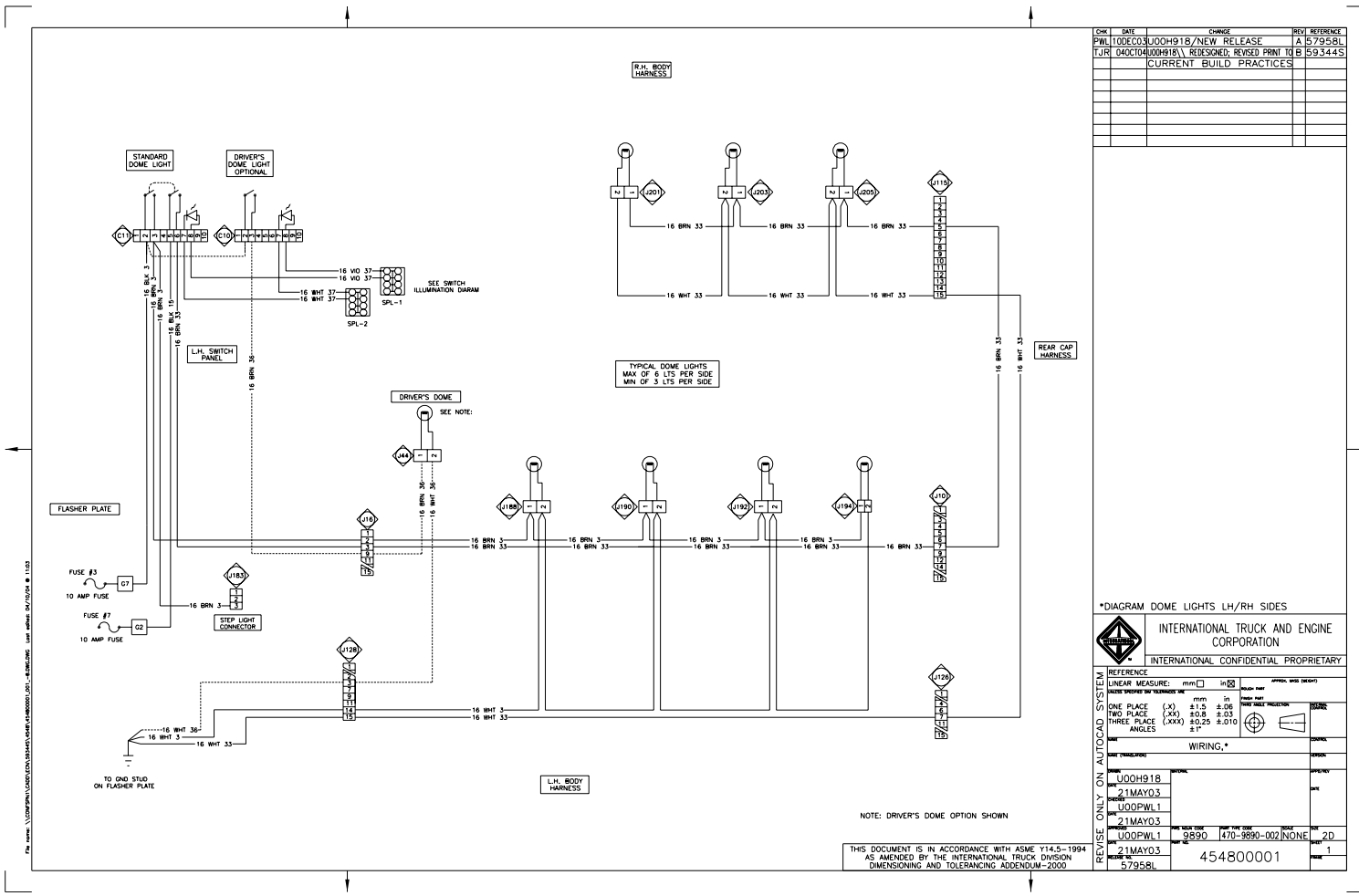

Figure 211 Dome Lights LH/RH Sides Single Switch

7.2. FRONT-REAR DOME LIGHTS

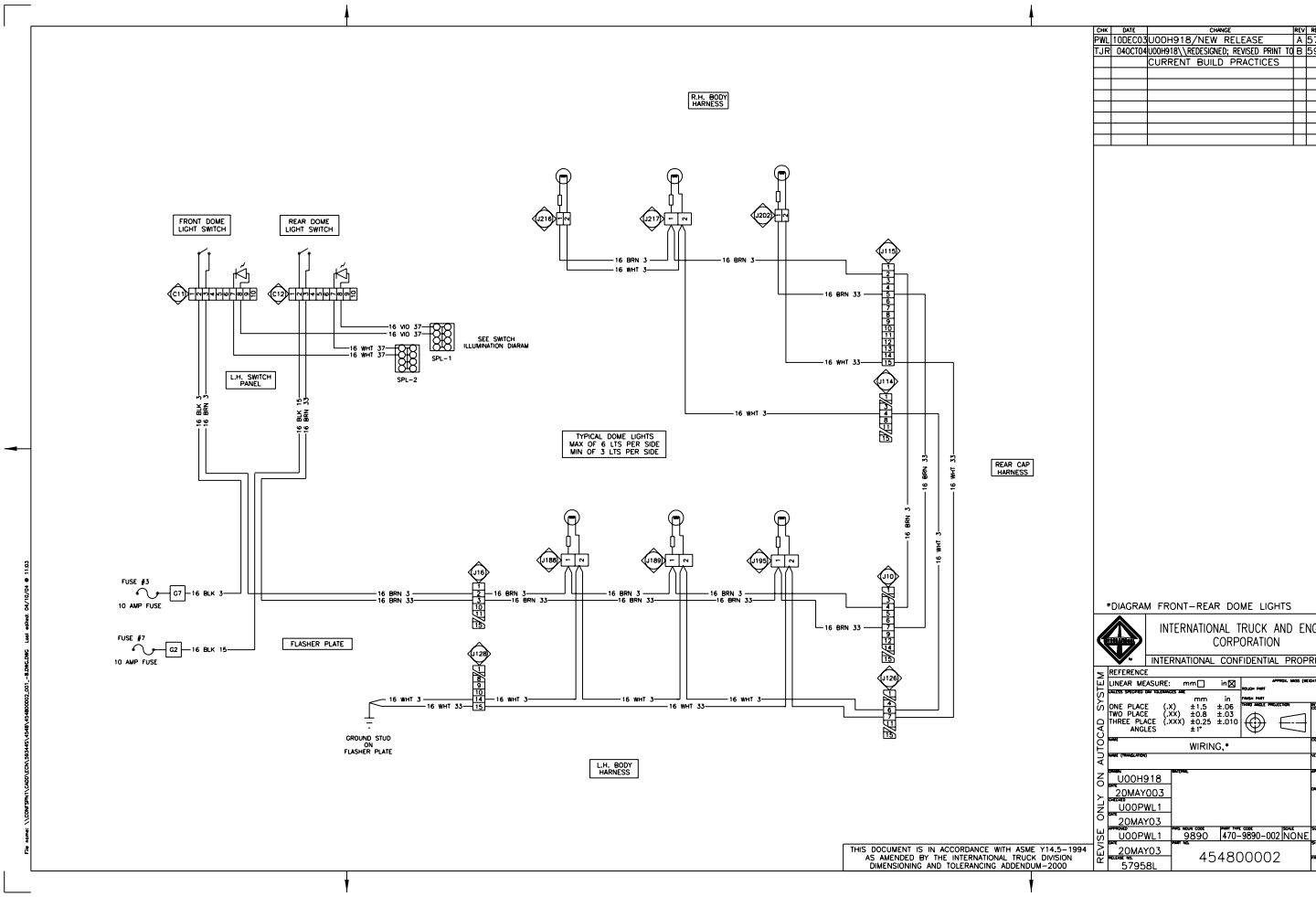

Figure 212 Front-Rear Dome Lights

7.3. DOME LIGHTS LEFT — RIGHT ON SEPARATE SWITCH

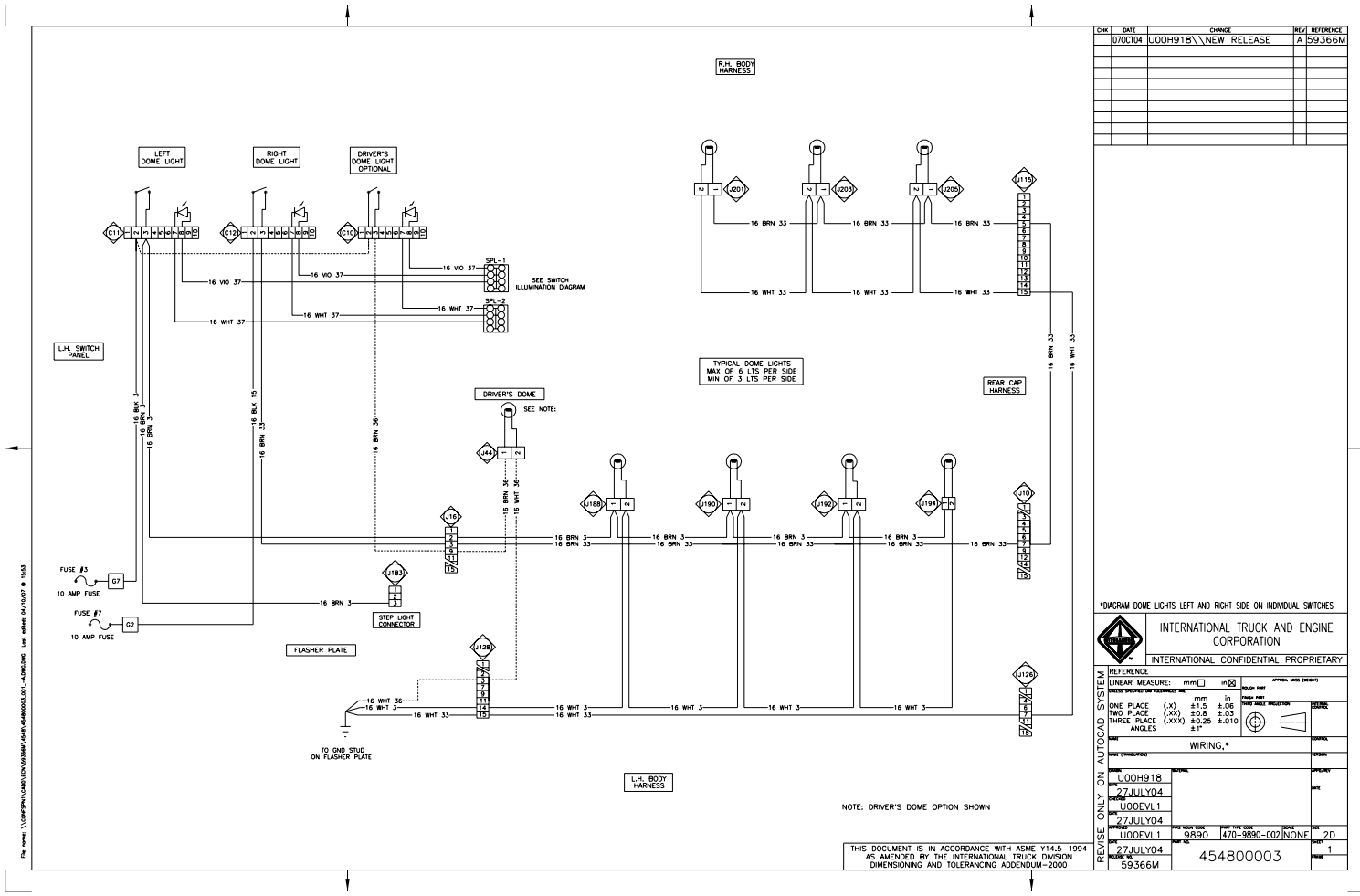

Figure 213 Dome Lights Left — Right on Separate Switch

7.4. BACK-UP LIGHTS WITH ALARM

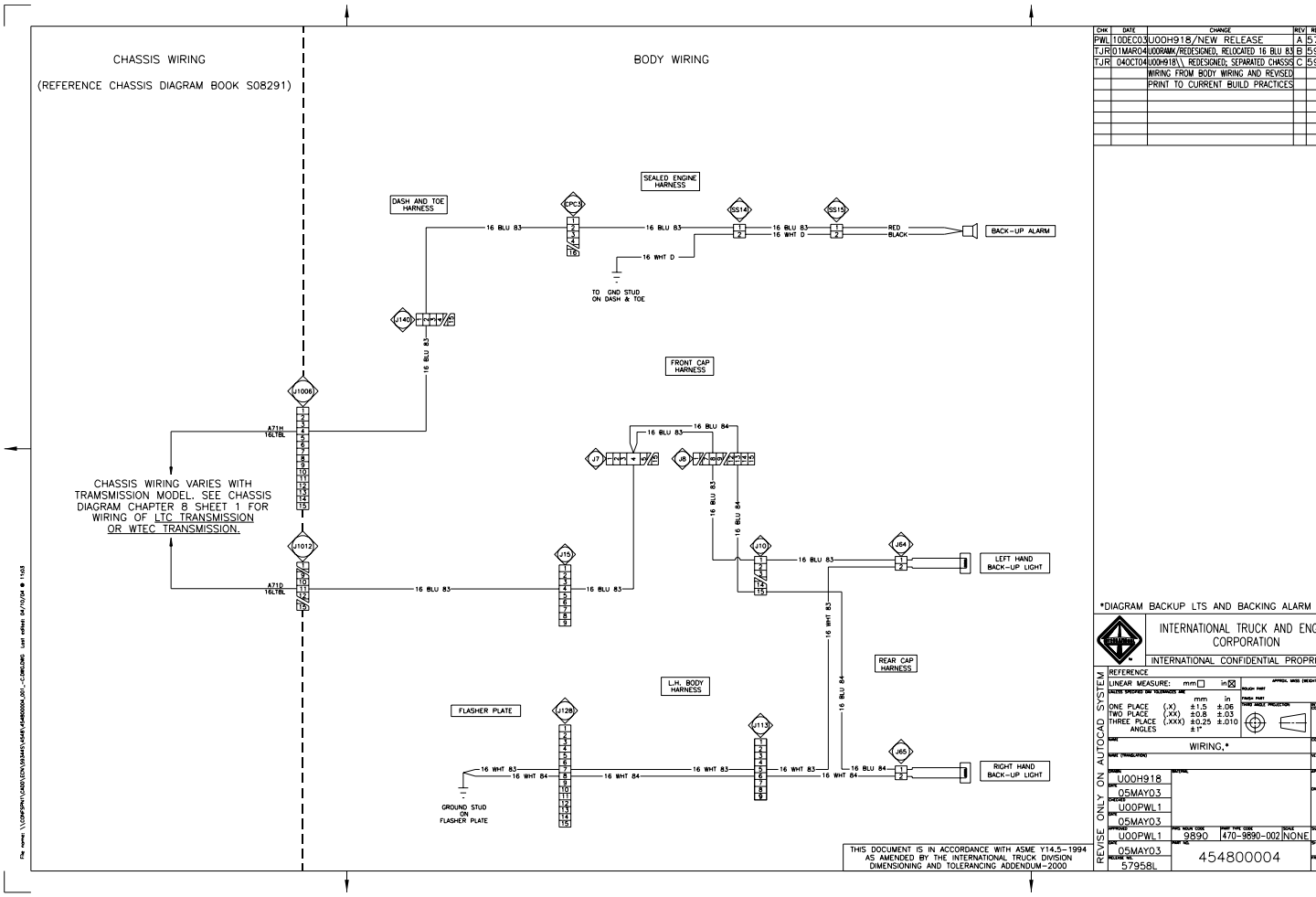

Figure 214 Back-Up Lights with Alarm

7.5. ACTIVITY LIGHT, LEFT OR RIGHT SIDE

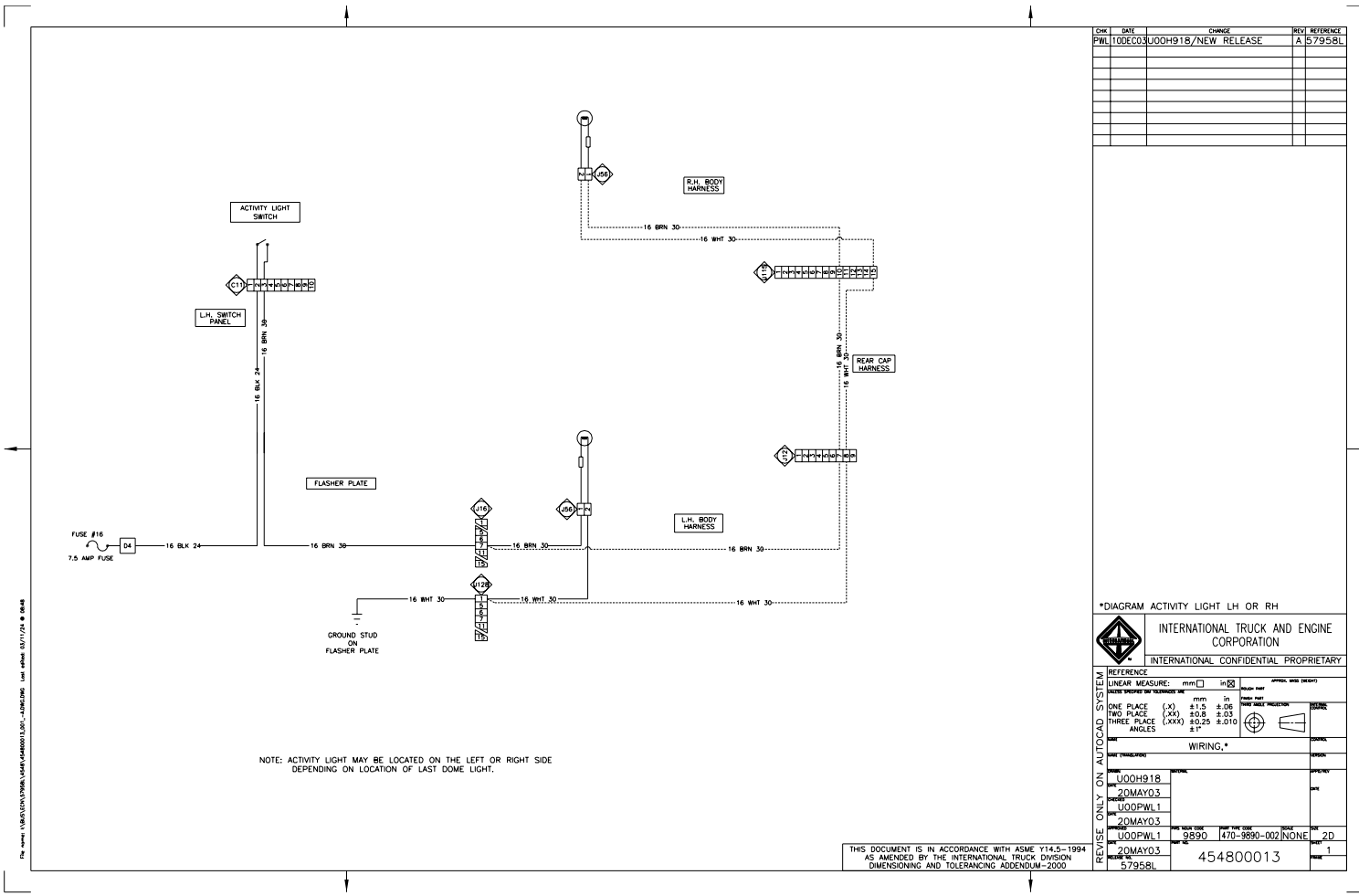

Figure 215 Activity Light, Left or Right Side

7.6. DOME LIGHTS ACTIVATED BY ANY EMERGENCY EXIT

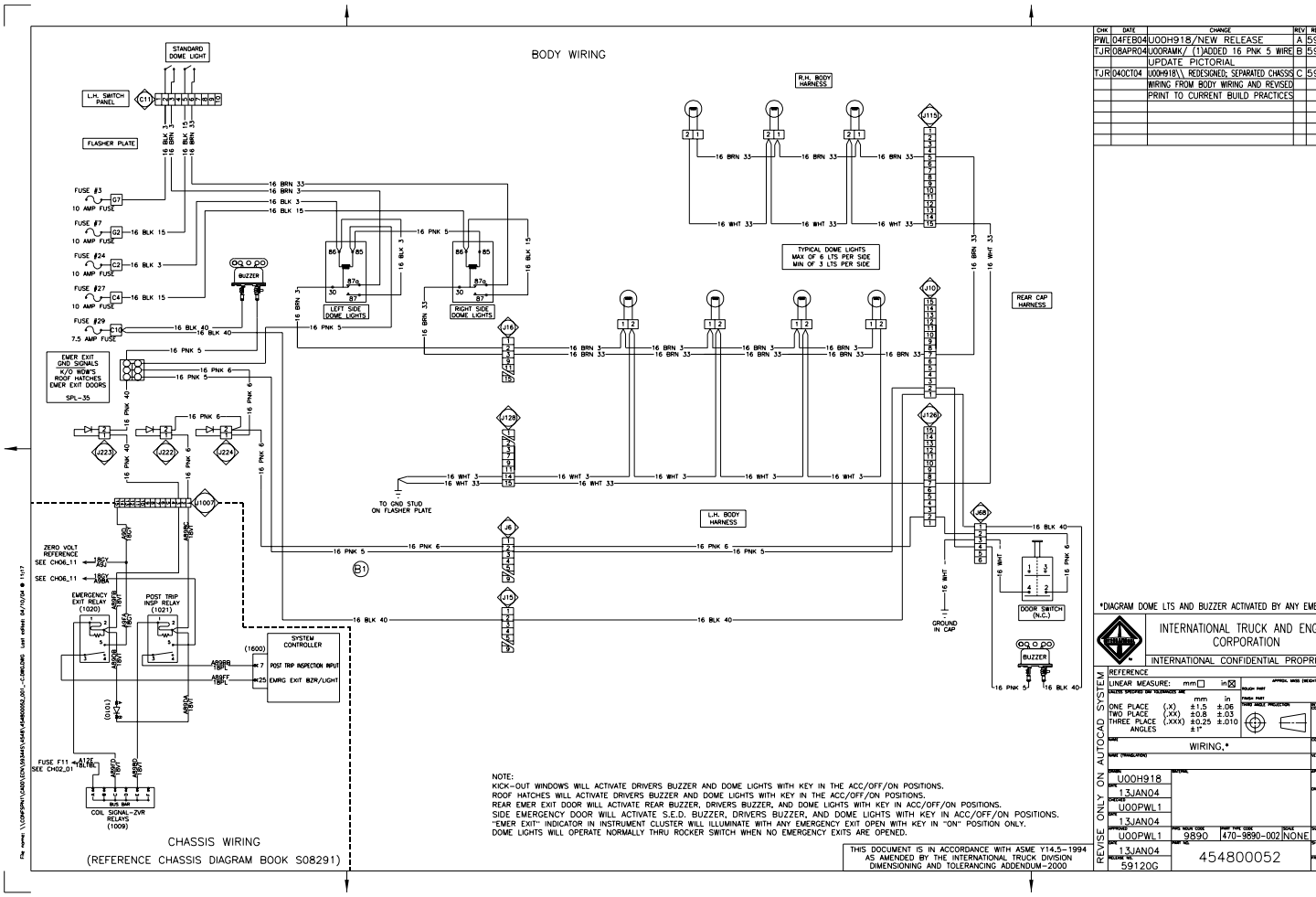

Figure 216 Dome Lights Activated by Any Emergency Exit

7.7. DOME LIGHTS ACTIVATED BY ROCKER SWITCH OR REAR EMERGENCY EXIT DOOR

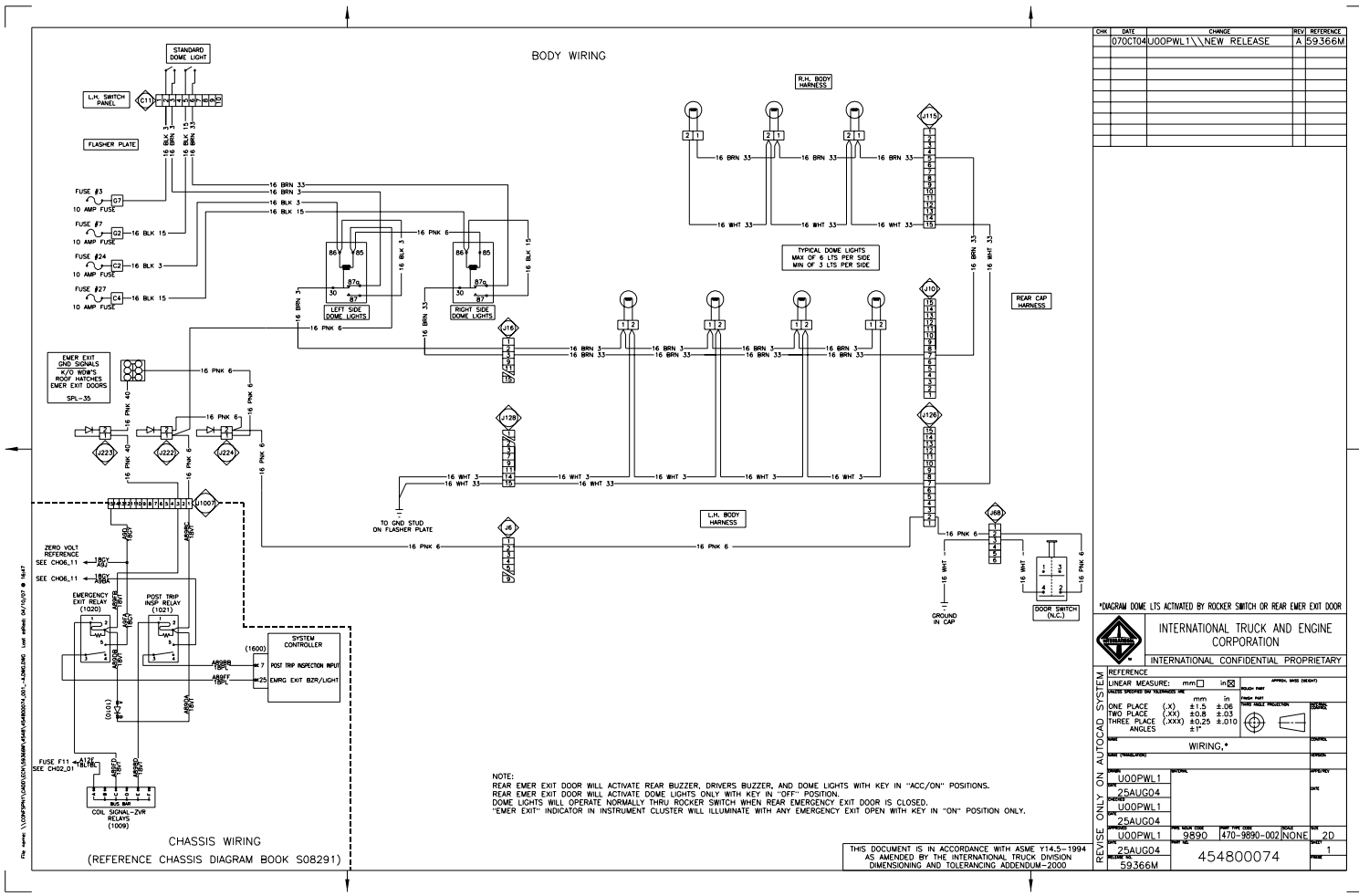

Figure 217 Dome Lights Activated by Rocker Switch or Rear Emergency Exit Door

7.8. SWITCH ILLUMINATION

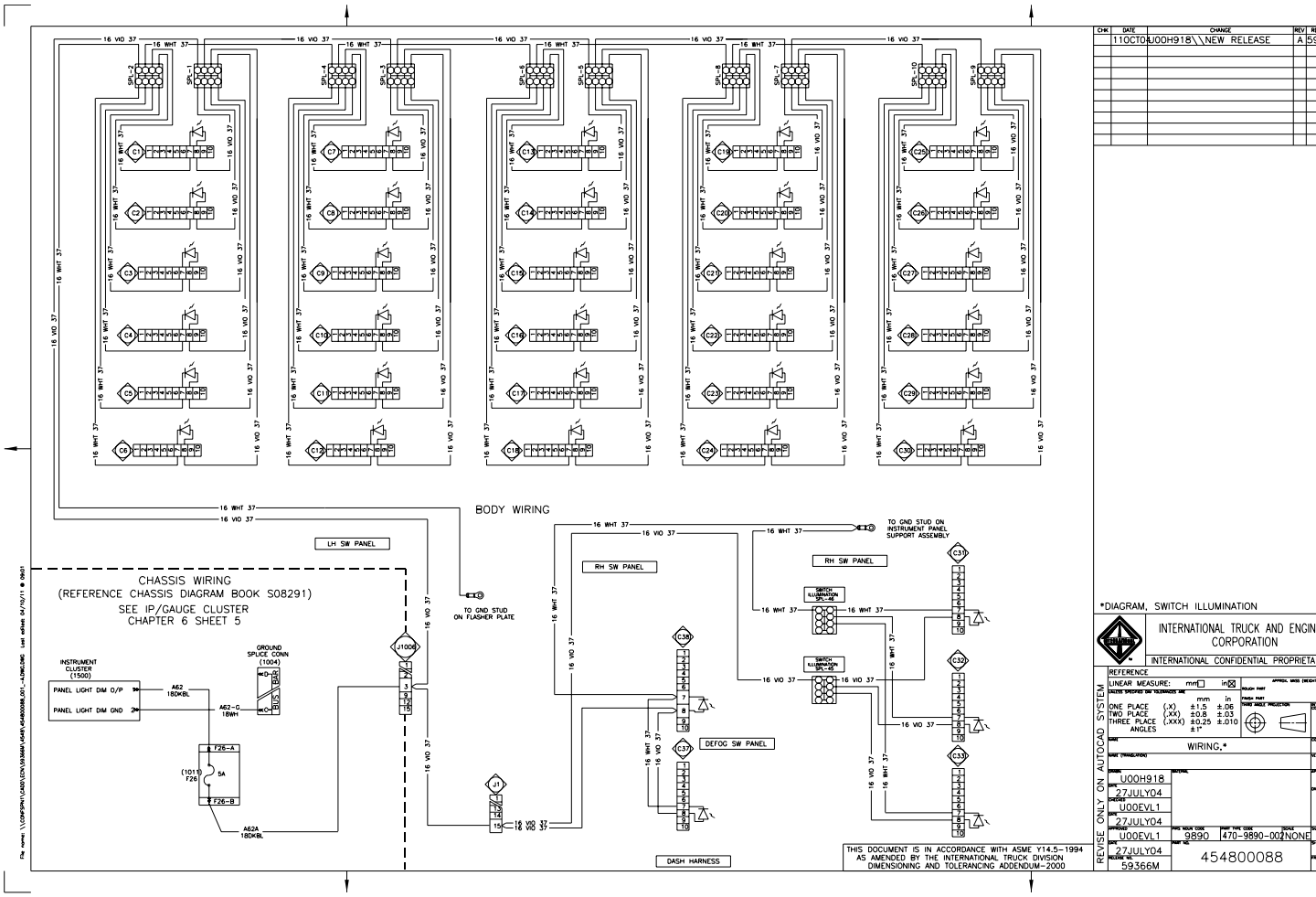

Figure 218 Switch Illumination

7.9. SWITCH ILLUMINATION WITH SEPARATE DIMMER SWITCH

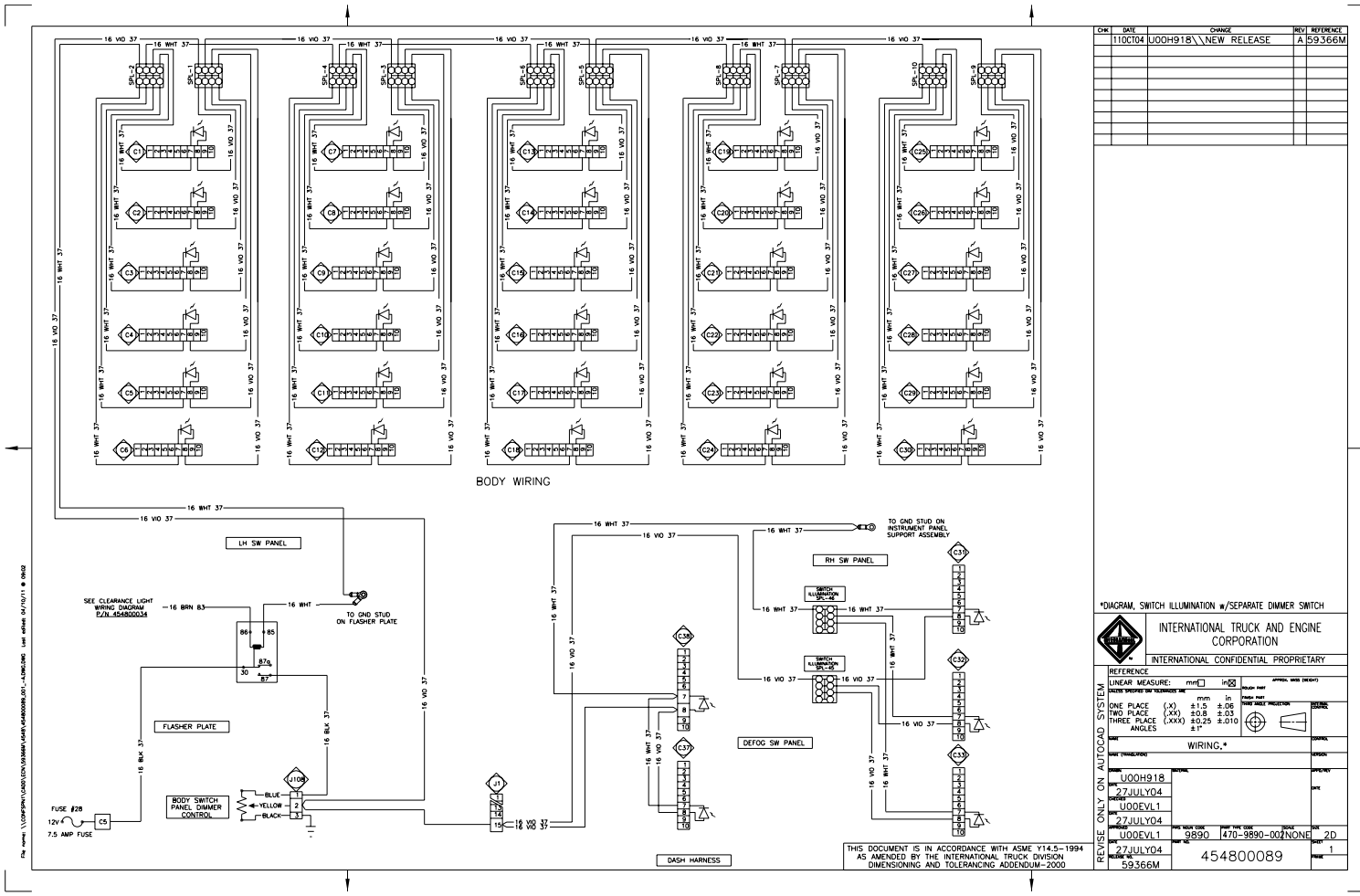

Figure 219 Switch Illumination with Separate Dimmer Switch

7.10. LAST DOME LIGHTS LH/RH SIDES

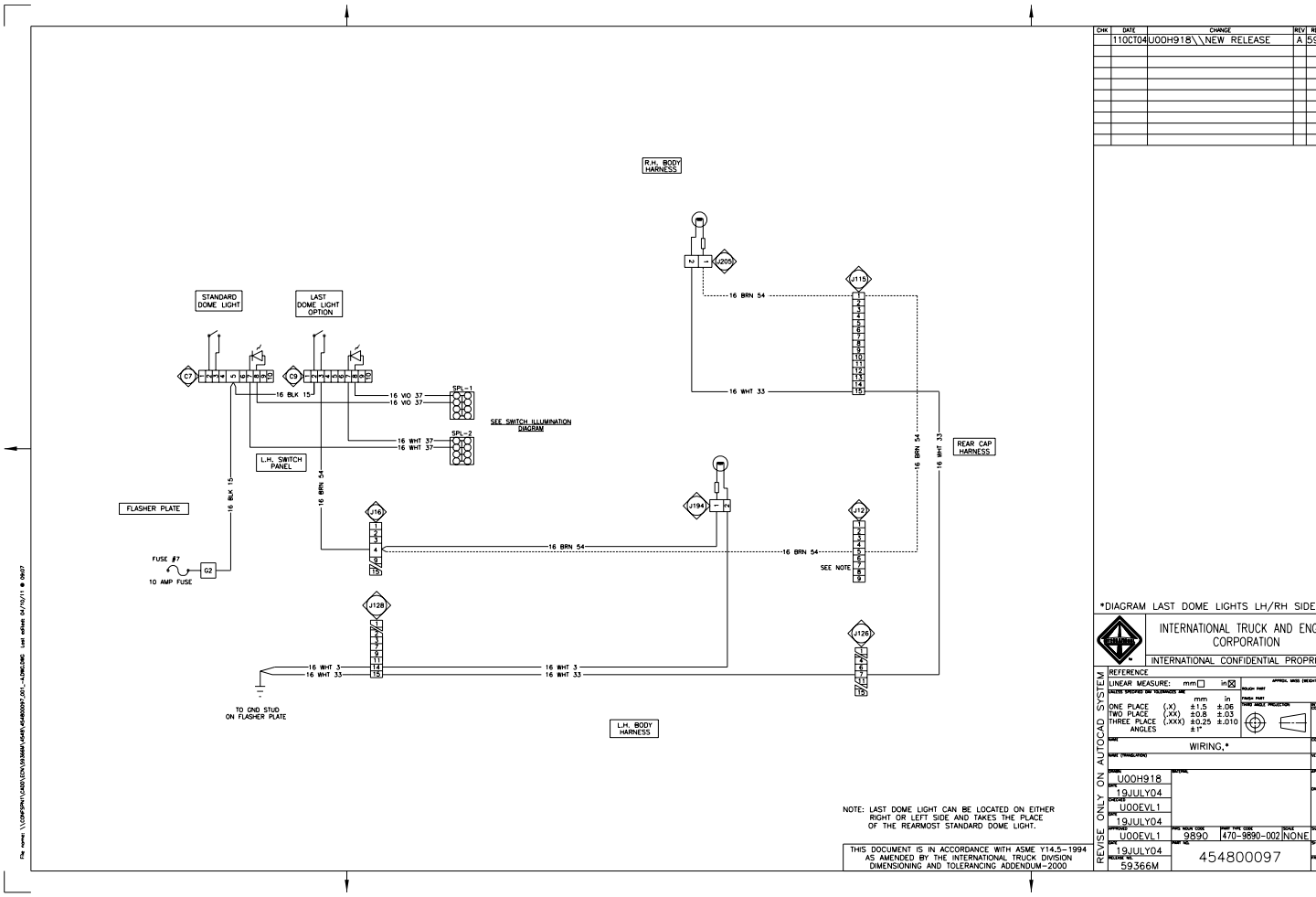

Figure 220 Last Dome Lights LH/RH Sides

7.11. REAR ROW DOME LIGHTS LH/RH SIDES

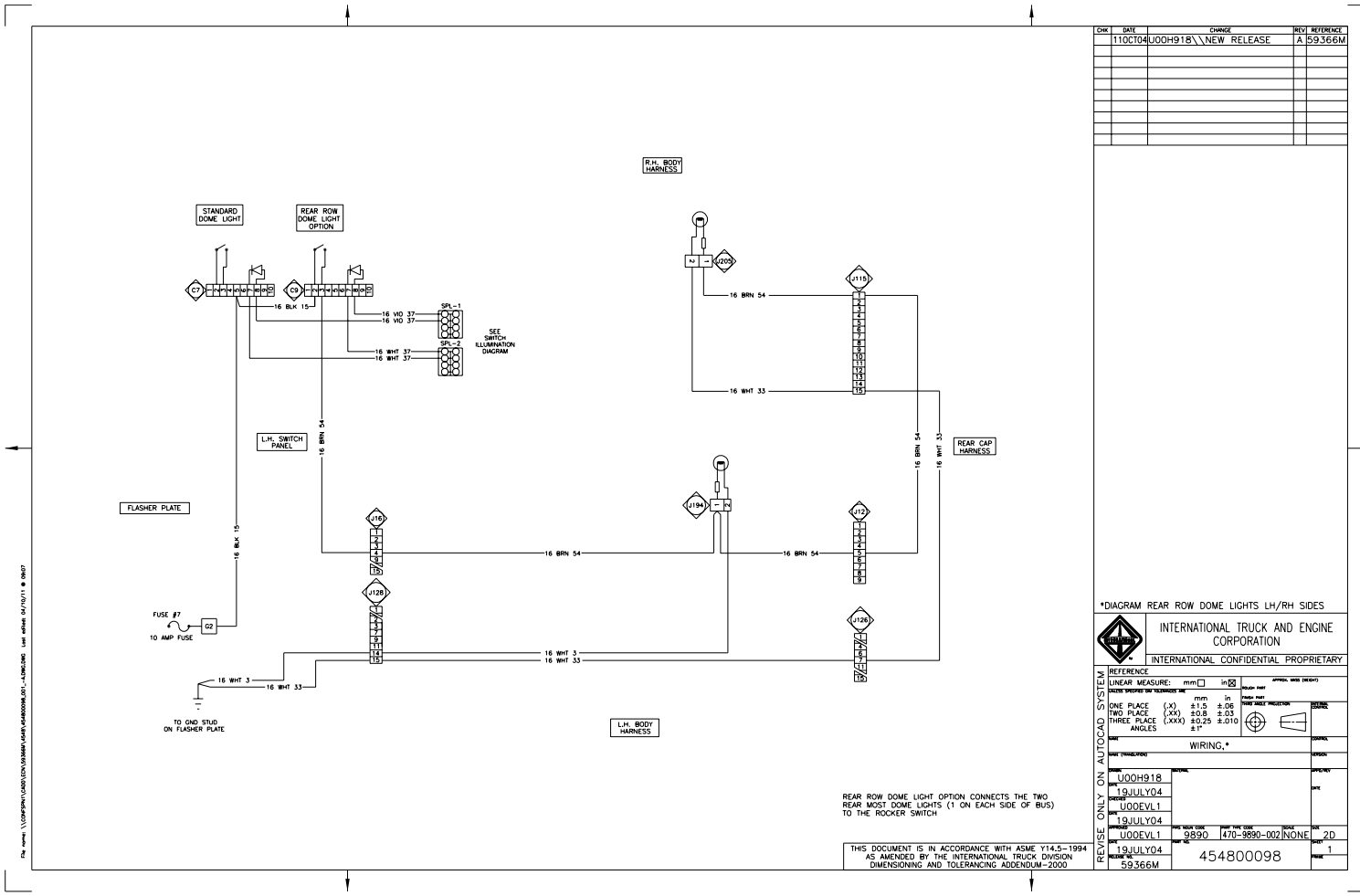

Figure 221 Rear Row Dome Lights LH/RH Sides

7.12. ENGINE COMPARTMENT LIGHT TIED TO CLEARANCE LIGHTS

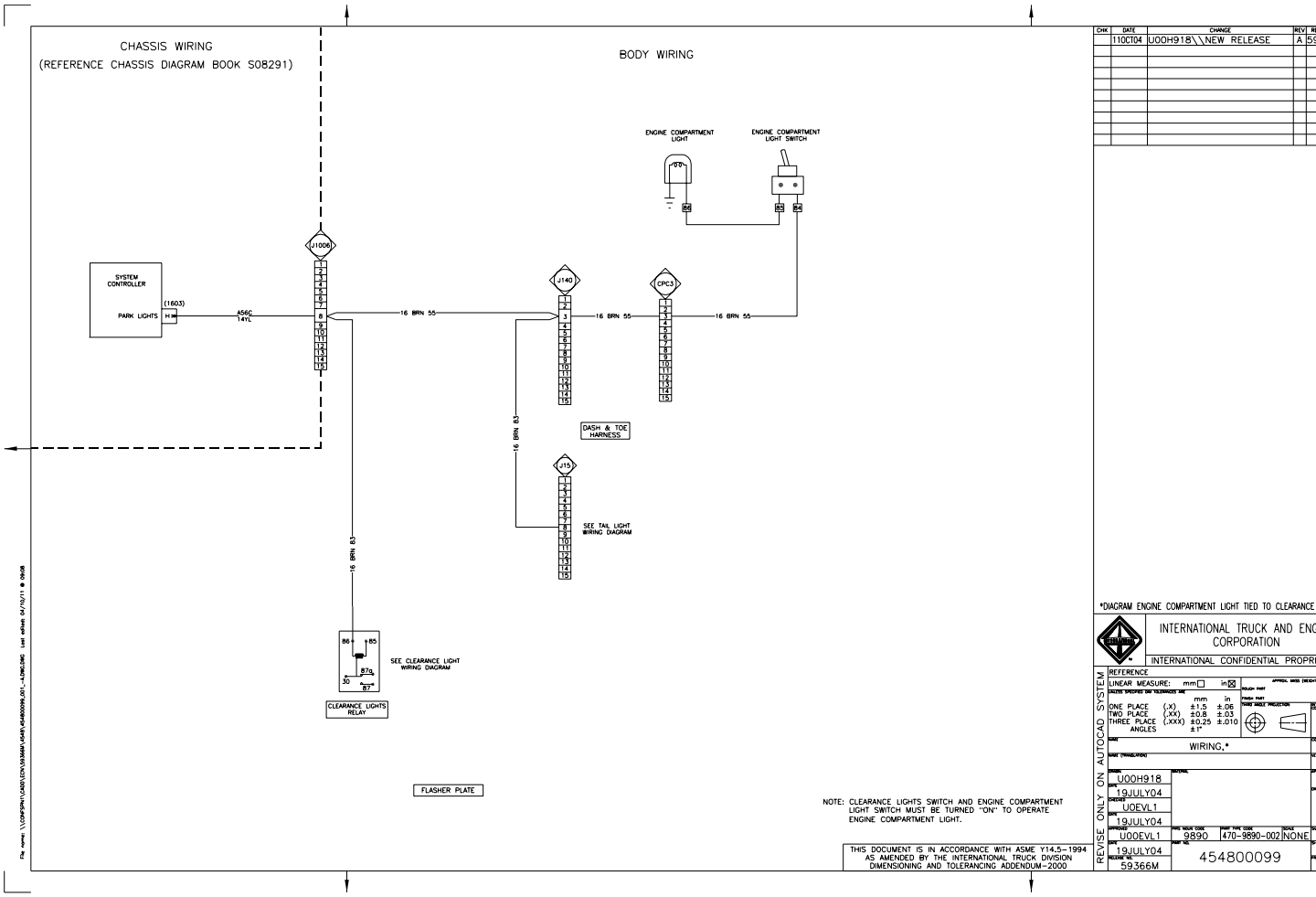

Figure 222 Engine Compartment Light Tied to Clearance Lights

7.13. DOME LIGHTS CONTROLLED BY RHEOSTAT

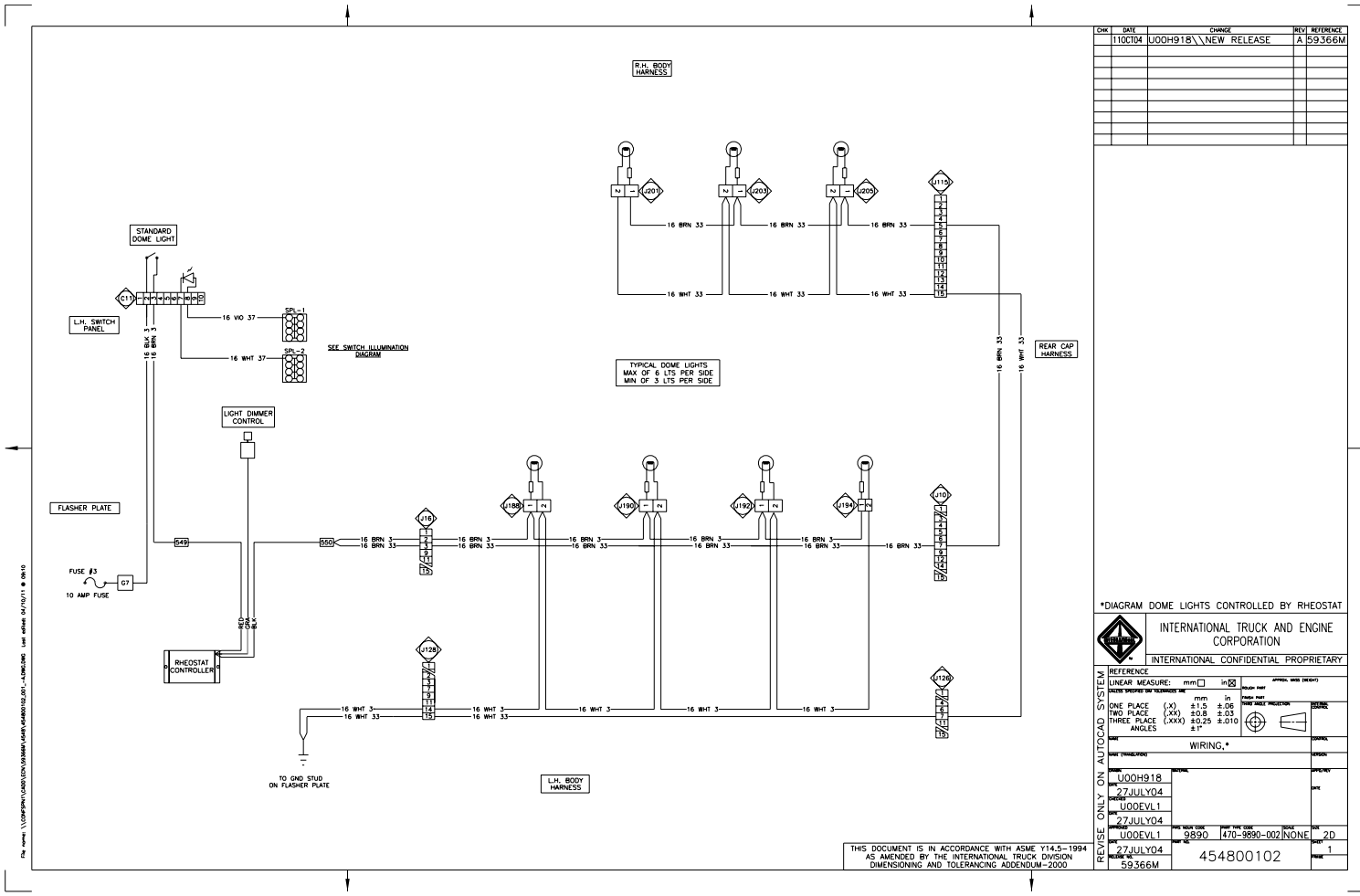

Figure 223 Dome Lights Controlled by Rheostat

7.14. STEP AND SKIRT LIGHT

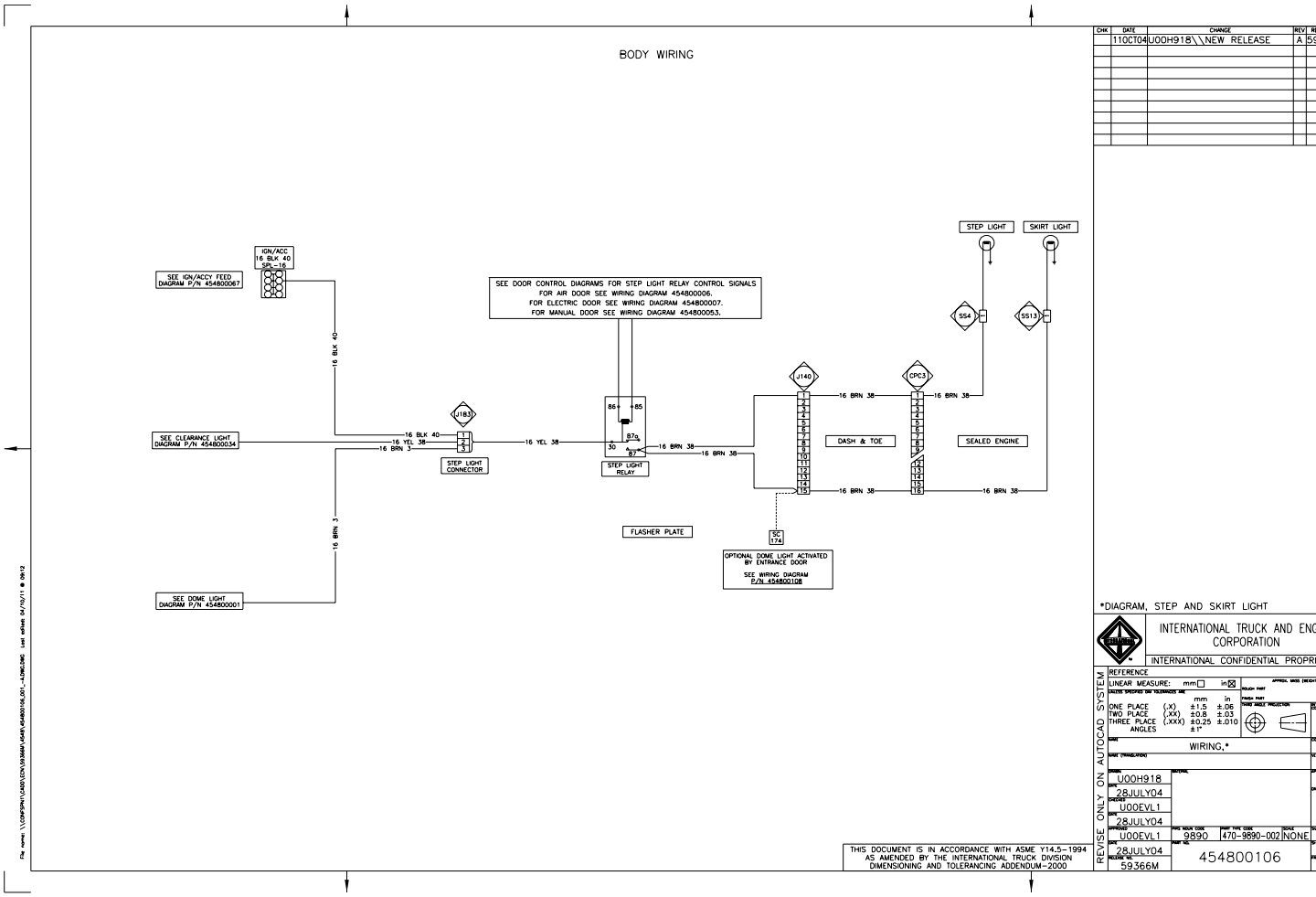

Figure 224 Step and Skirt Light

7.15. DOME LTS AND BUZZER ACTIVATED BY ANY EMER EXIT W/SEPARATE DOME LIGHT SWITCH

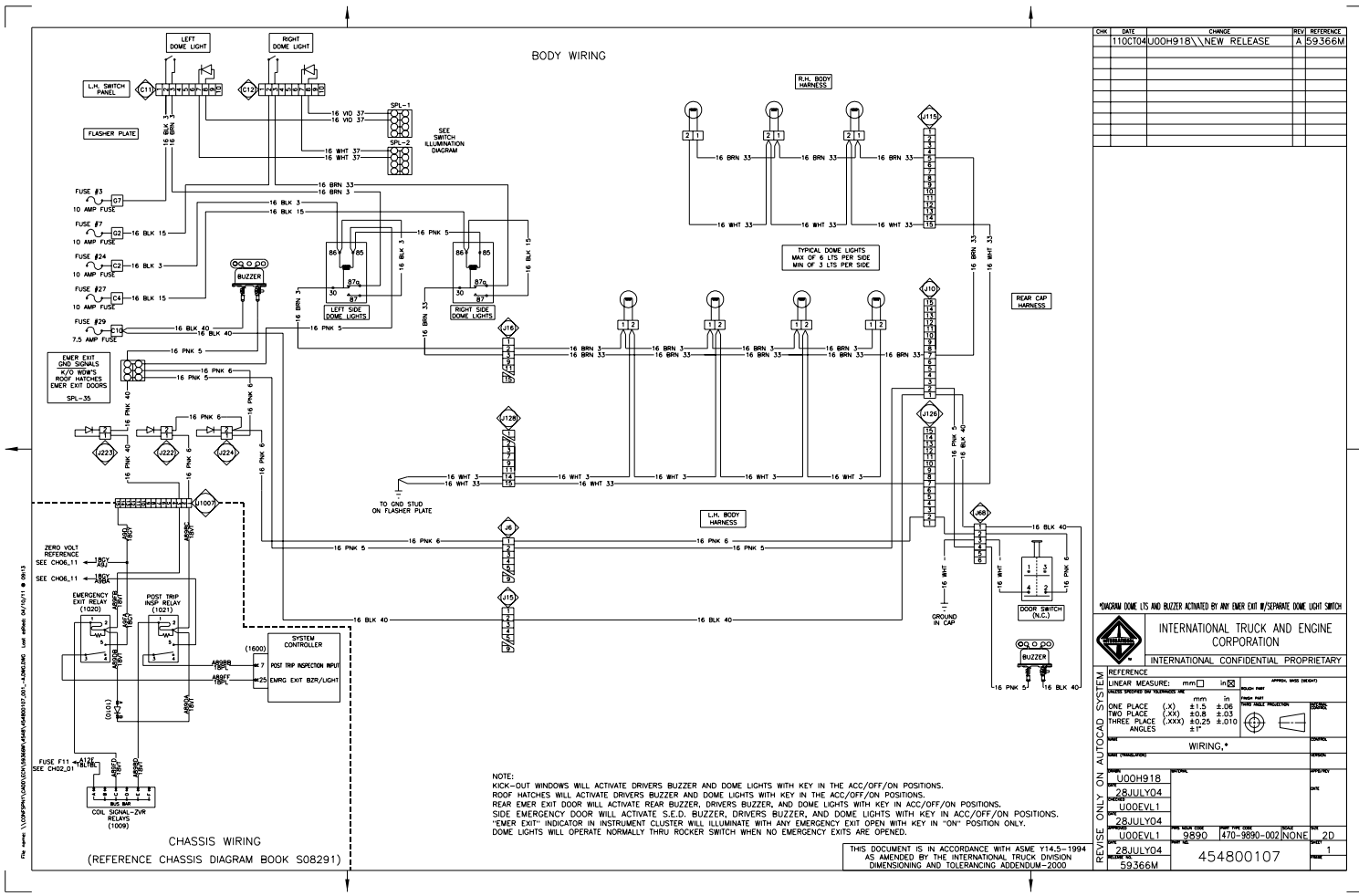

Figure 225 Dome Lts and Buzzer Activated by Any Emer Exit w/Separate Dome Light Switch

7.16. DOME LIGHTS ACTIVATED BY ENTRANCE DOOR

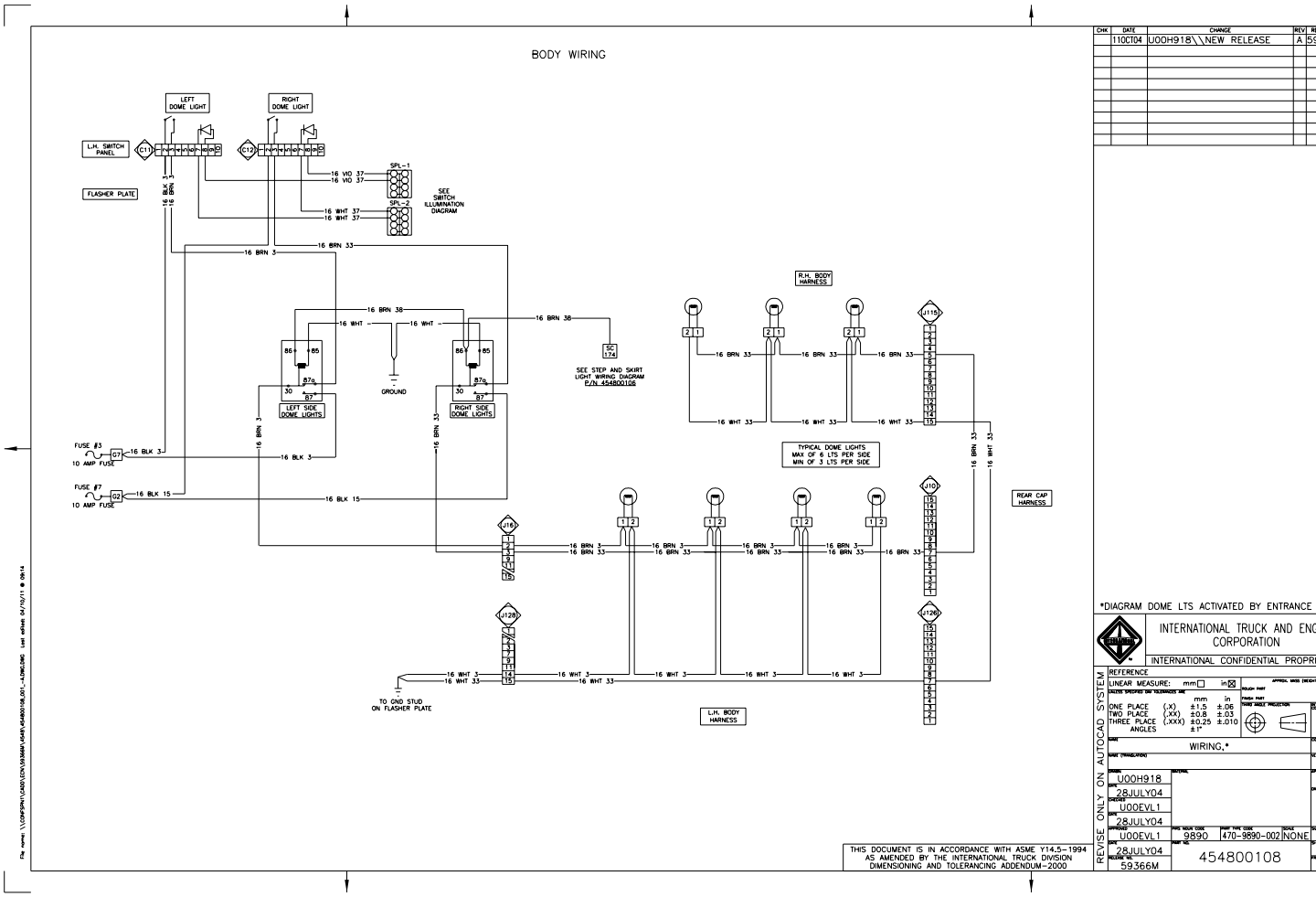

Figure 226 Dome Lights Activated by Entrance Door

8. EXTERIOR LIGHTING (CHAPTER 8)

8.1. TAIL LIGHTS / BRAKE LIGHTS — BUILT PRIOR TO FEBRUARY 2004

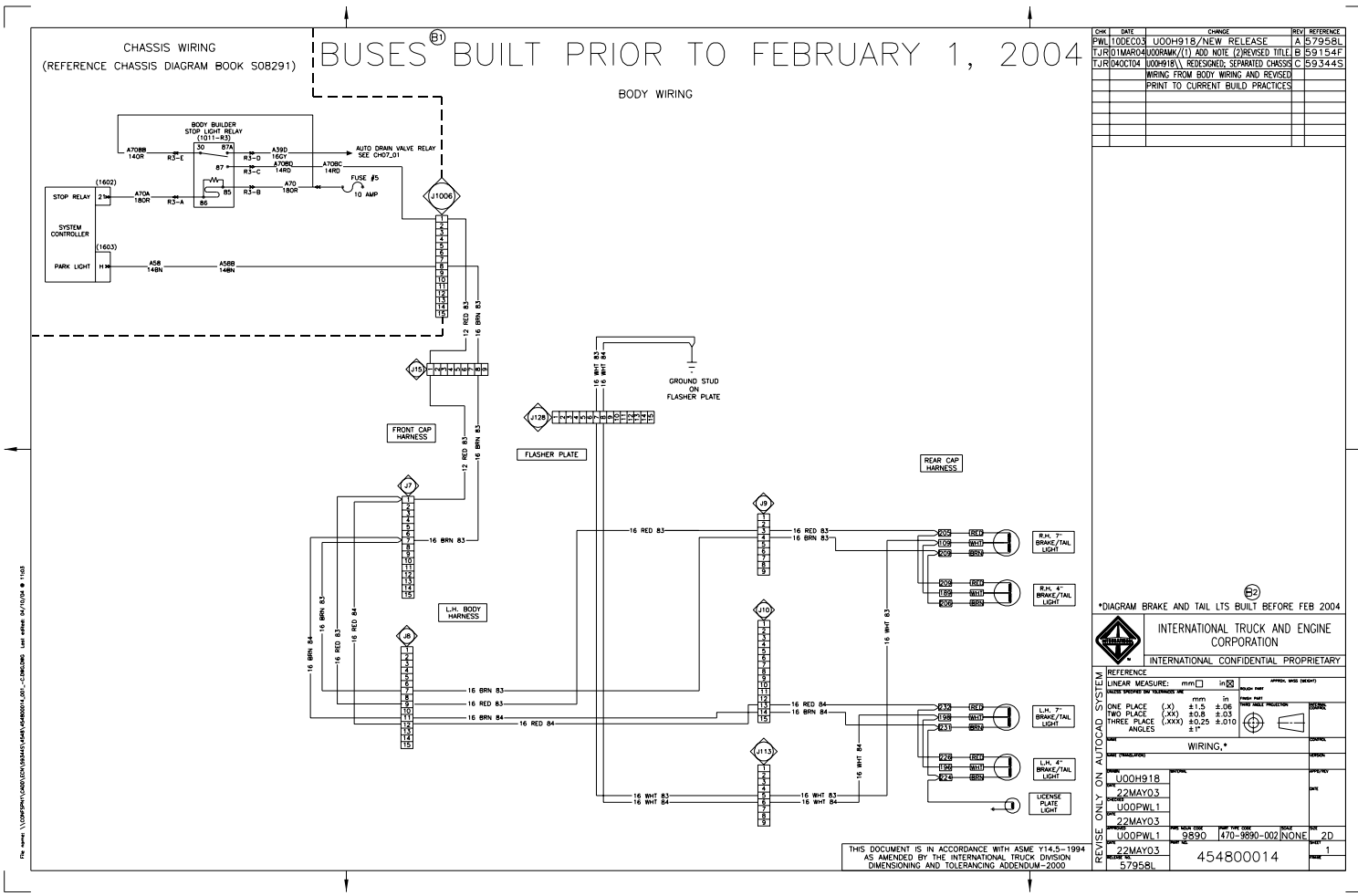

Figure 227 Tail Lights / Brake Lights — Built Prior to February 2004

8.2. DESTINATION SIGNS, FR/RR

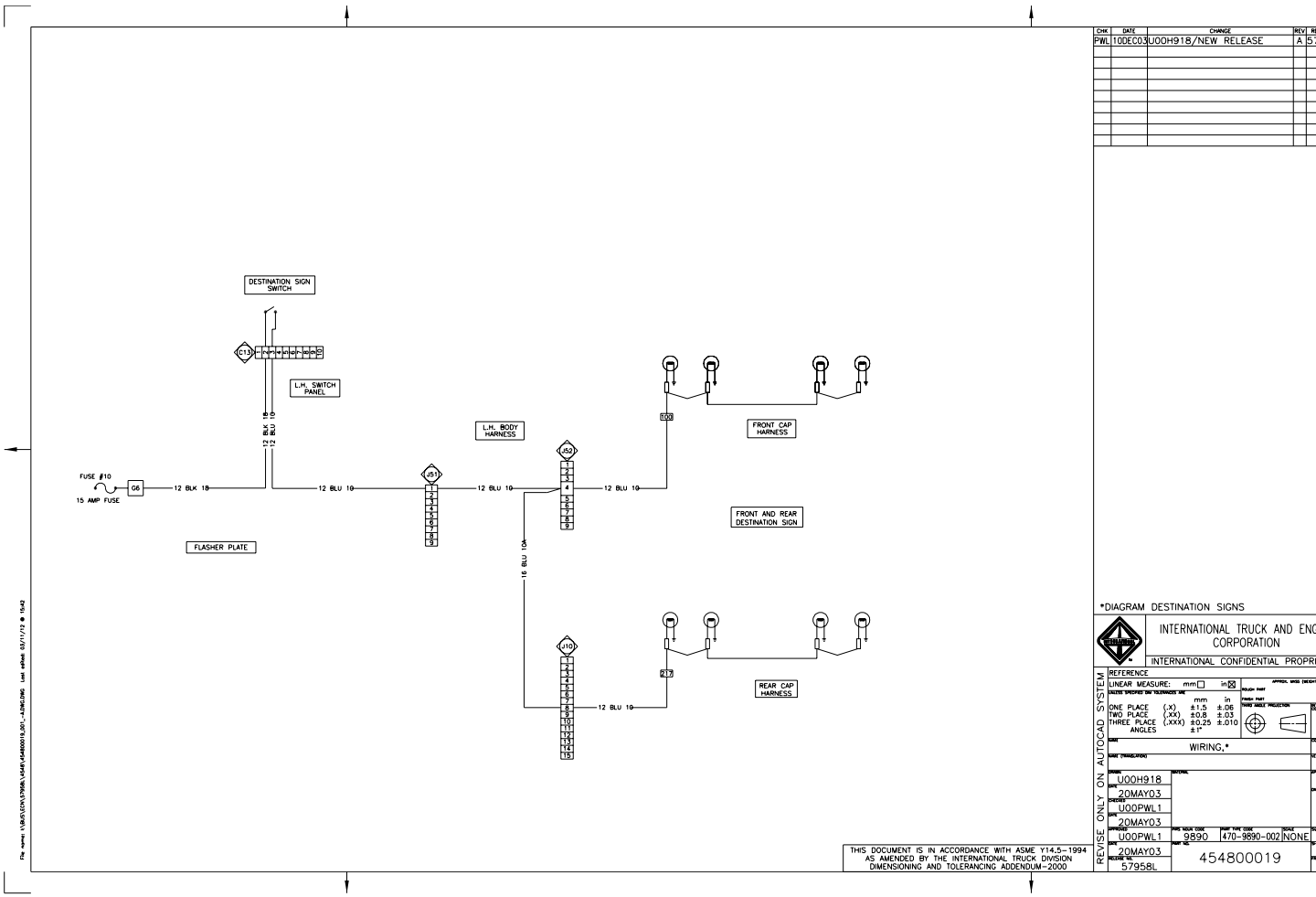

Figure 228 Destination Signs, FR/RR

8.3. LUGGAGE BOX LIGHTS

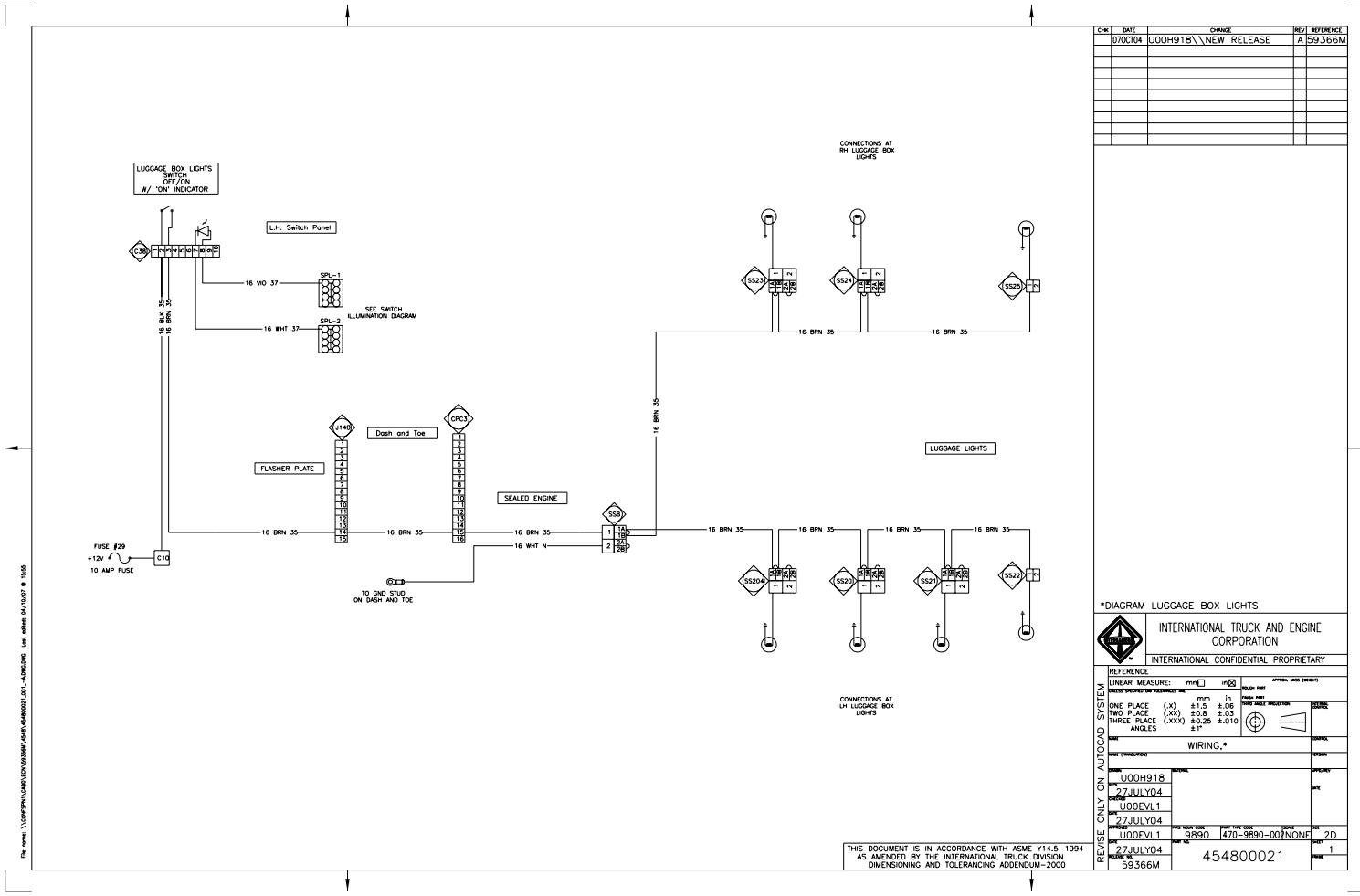

Figure 229 Luggage Box Lights

8.4. STROBE LIGHT

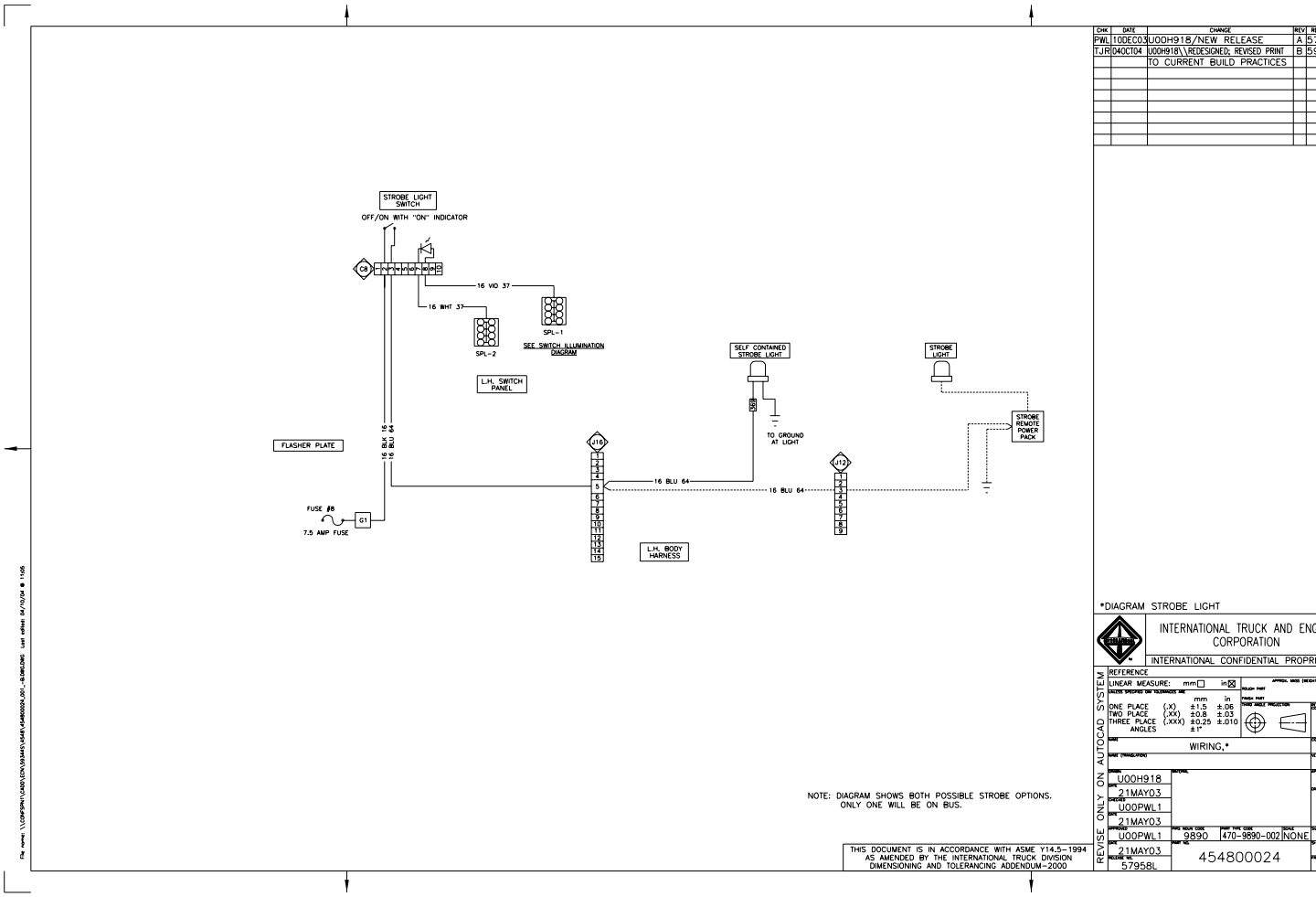

Figure 230 Strobe Light

8.5. TURN SIGNALS — FRONT, SIDE AND REAR — BUILT PRIOR TO FEBRUARY 2004

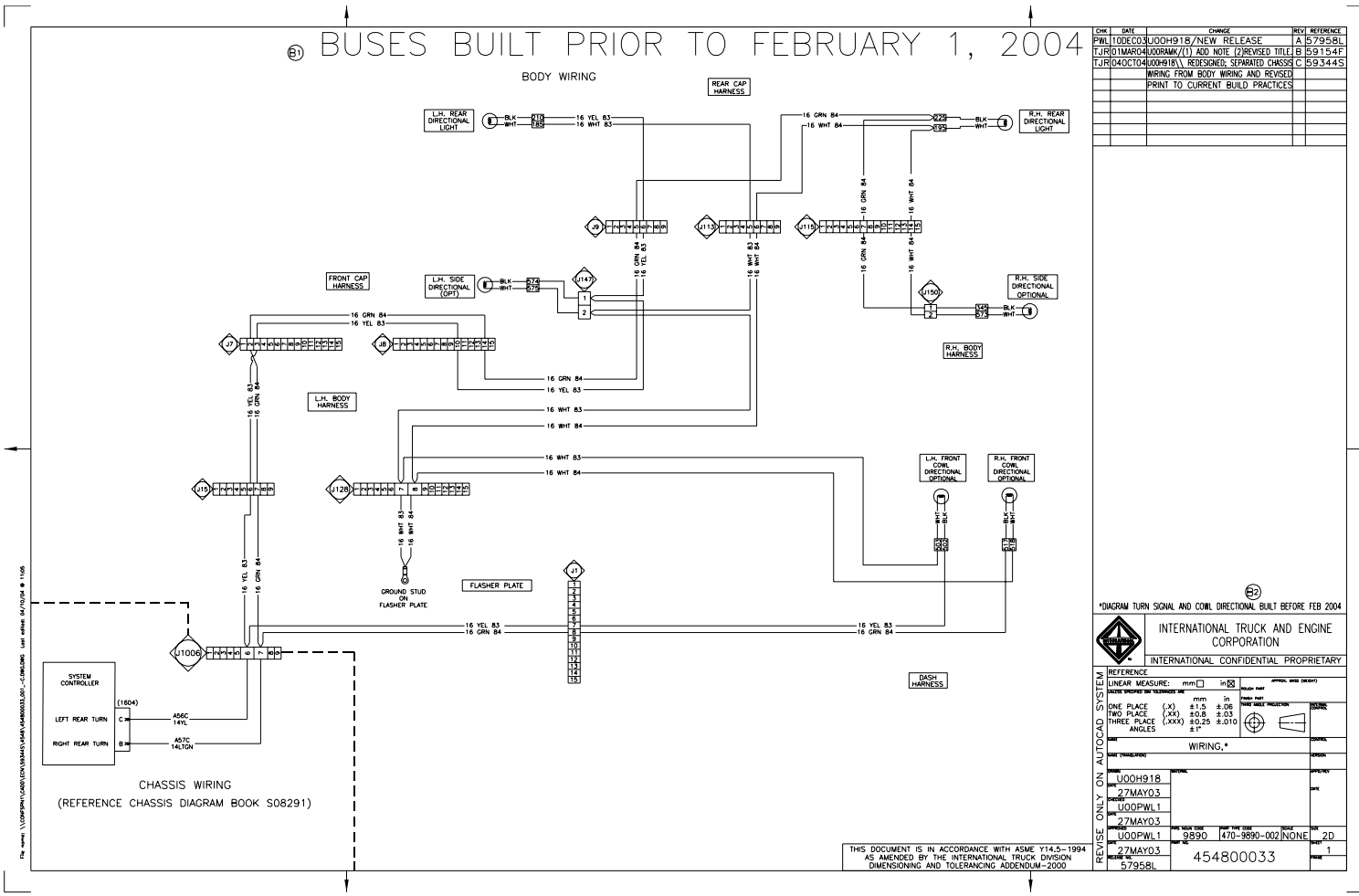

Figure 231 Turn Signals — Front, Side and Rear — Built Prior to February 2004

8.6. CLEARANCE LIGHTS

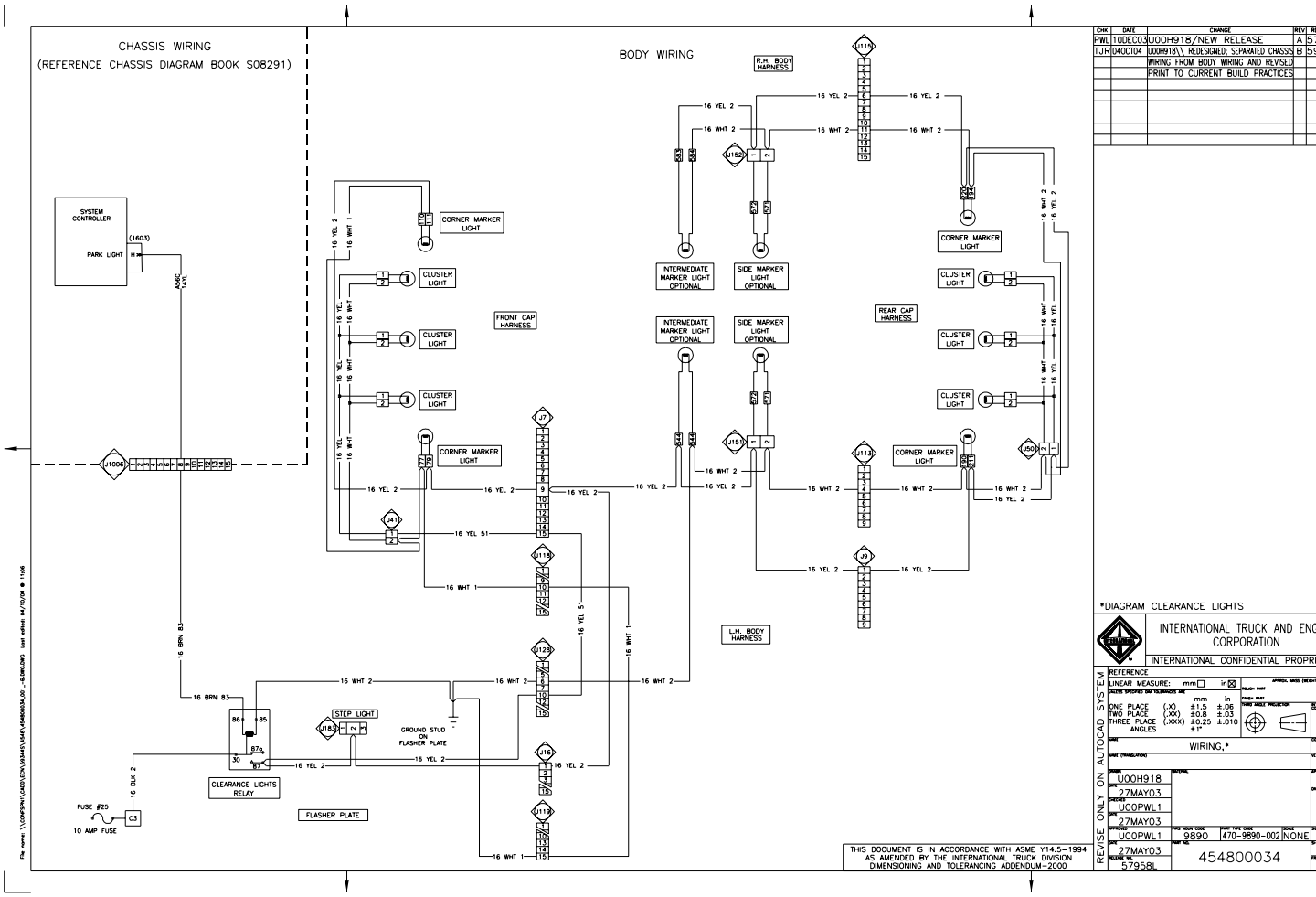

Figure 232 Clearance Lights

8.7. 8 LAMP MONITOR

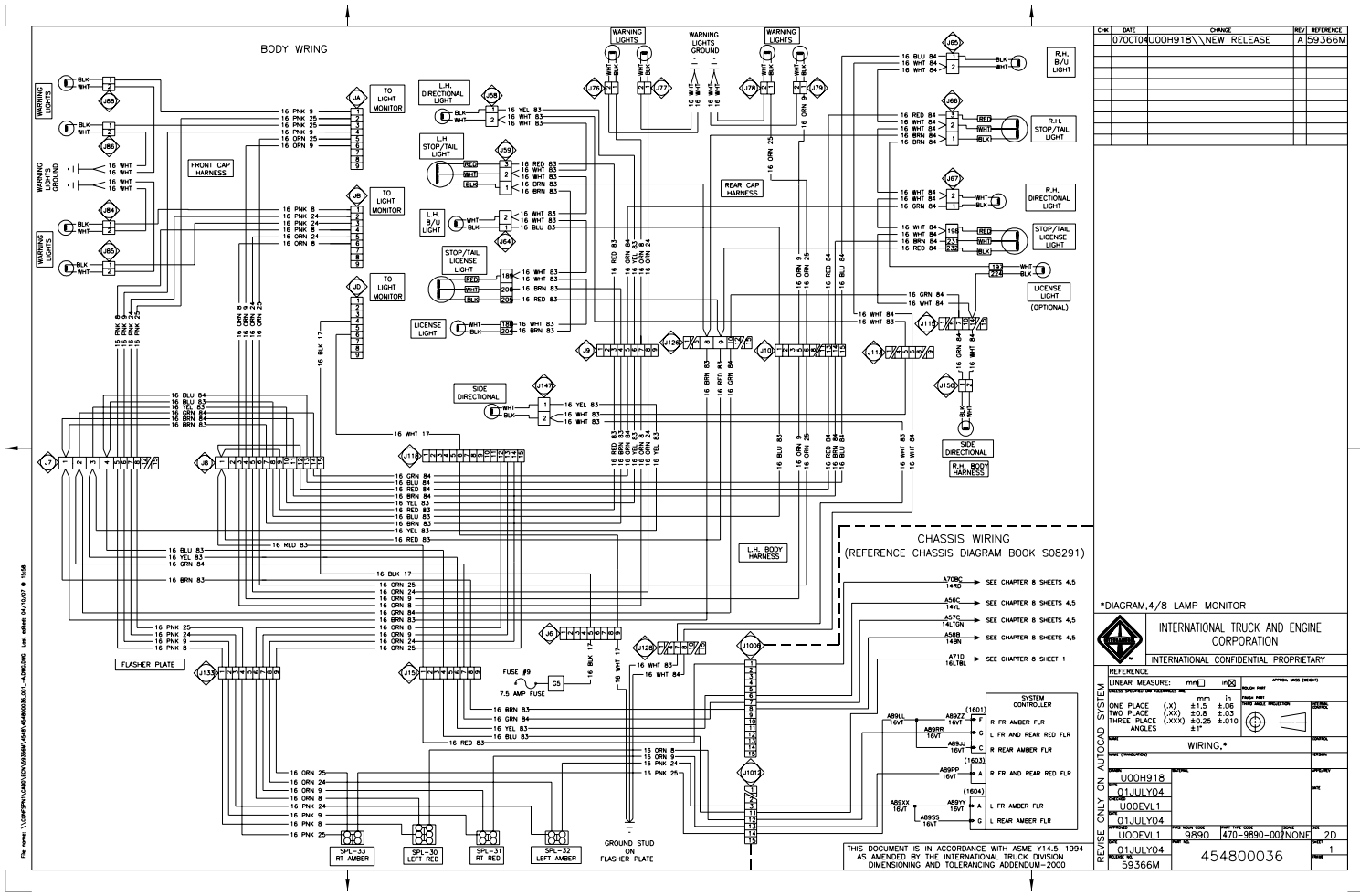

Figure 233 8 Lamp Monitor

8.8. 12 — 16 LAMP MONITOR

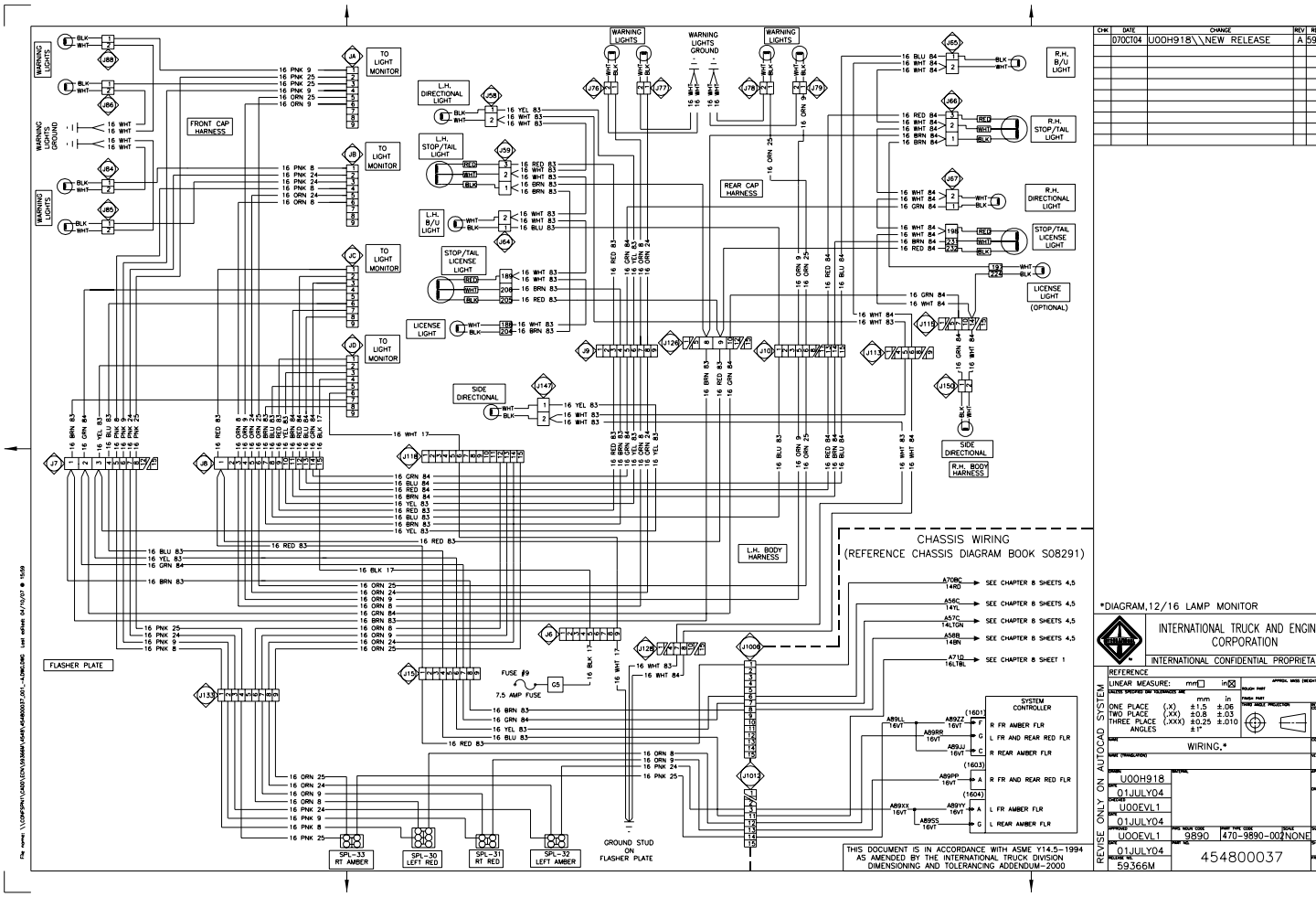

Figure 234 12 — 16 Lamp Monitor

8.9. TURN SIGNALS — FRONT, SIDE AND REAR — BUILT FEBRUARY 2004 TO PRESENT

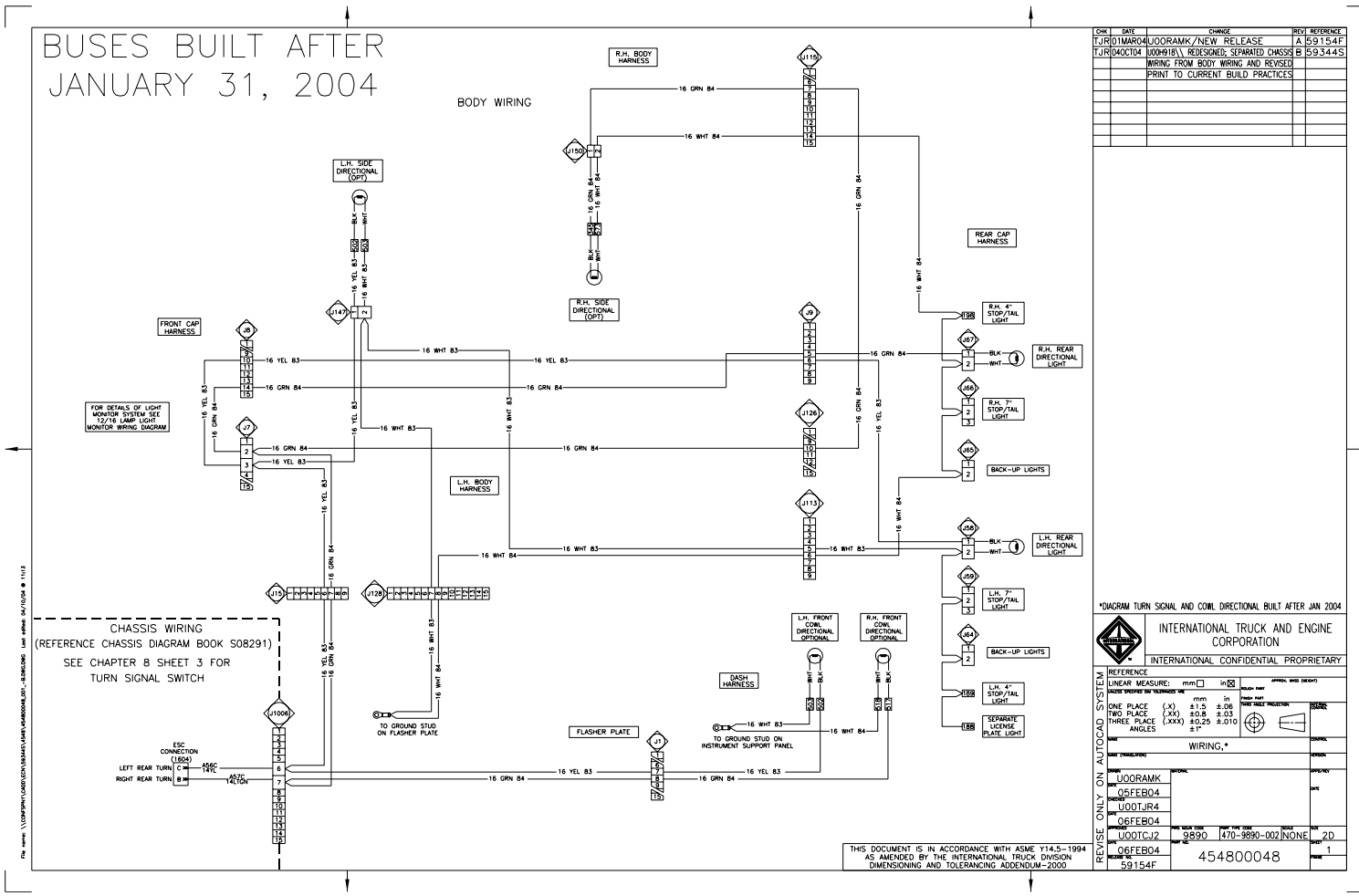

Figure 235 Turn Signals — Front, Side and Rear — Built February 2004 to Present

8.10. BACK-UP LIGHTS ACTIVATED BY REAR DOOR 49ABE

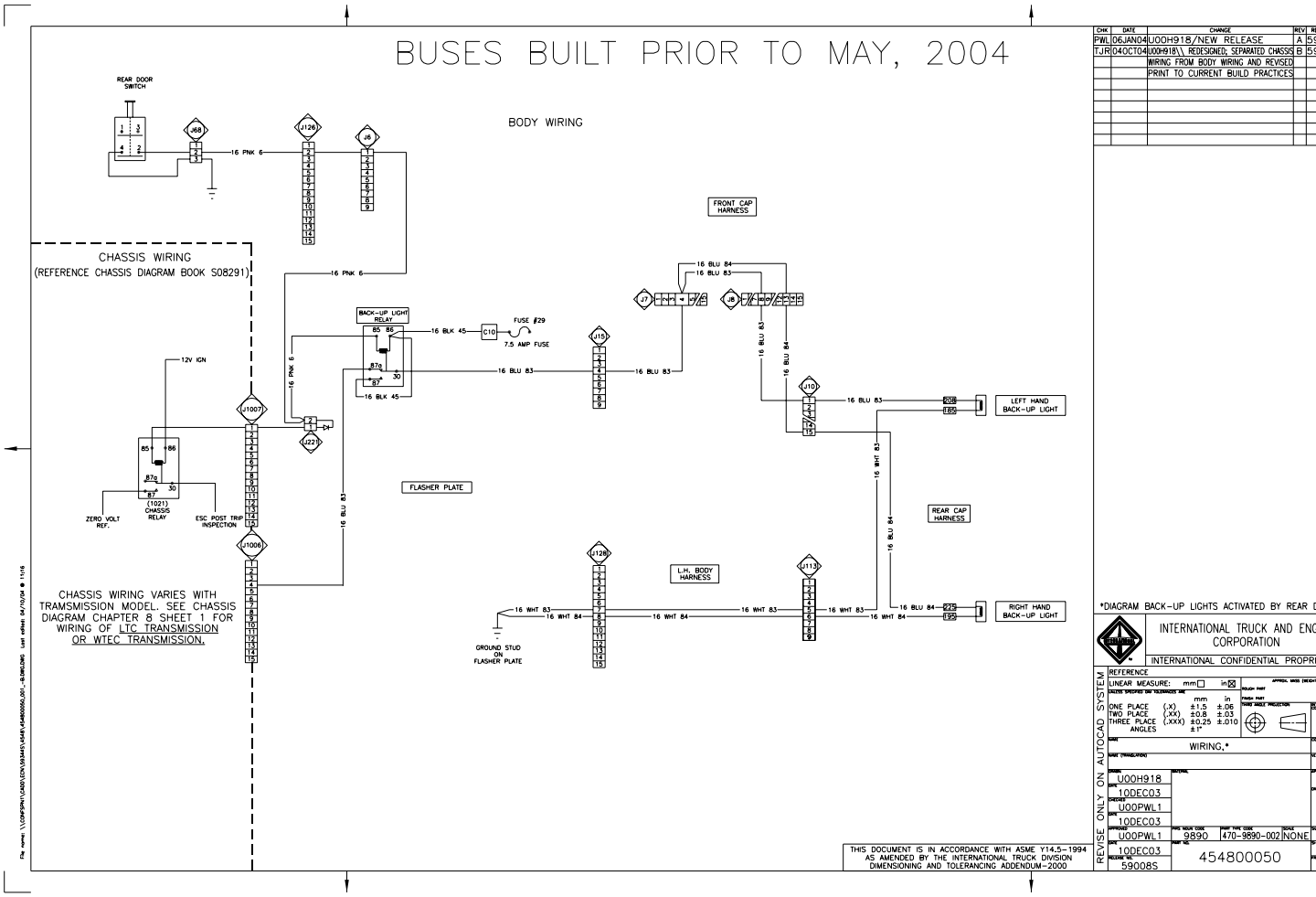

Figure 236 Back Up Lights Activated by Rear Door 49ABE

8.11. TAIL LIGHTS / BRAKE LIGHTS — BUILT FEBRUARY 2004 TO PRESENT

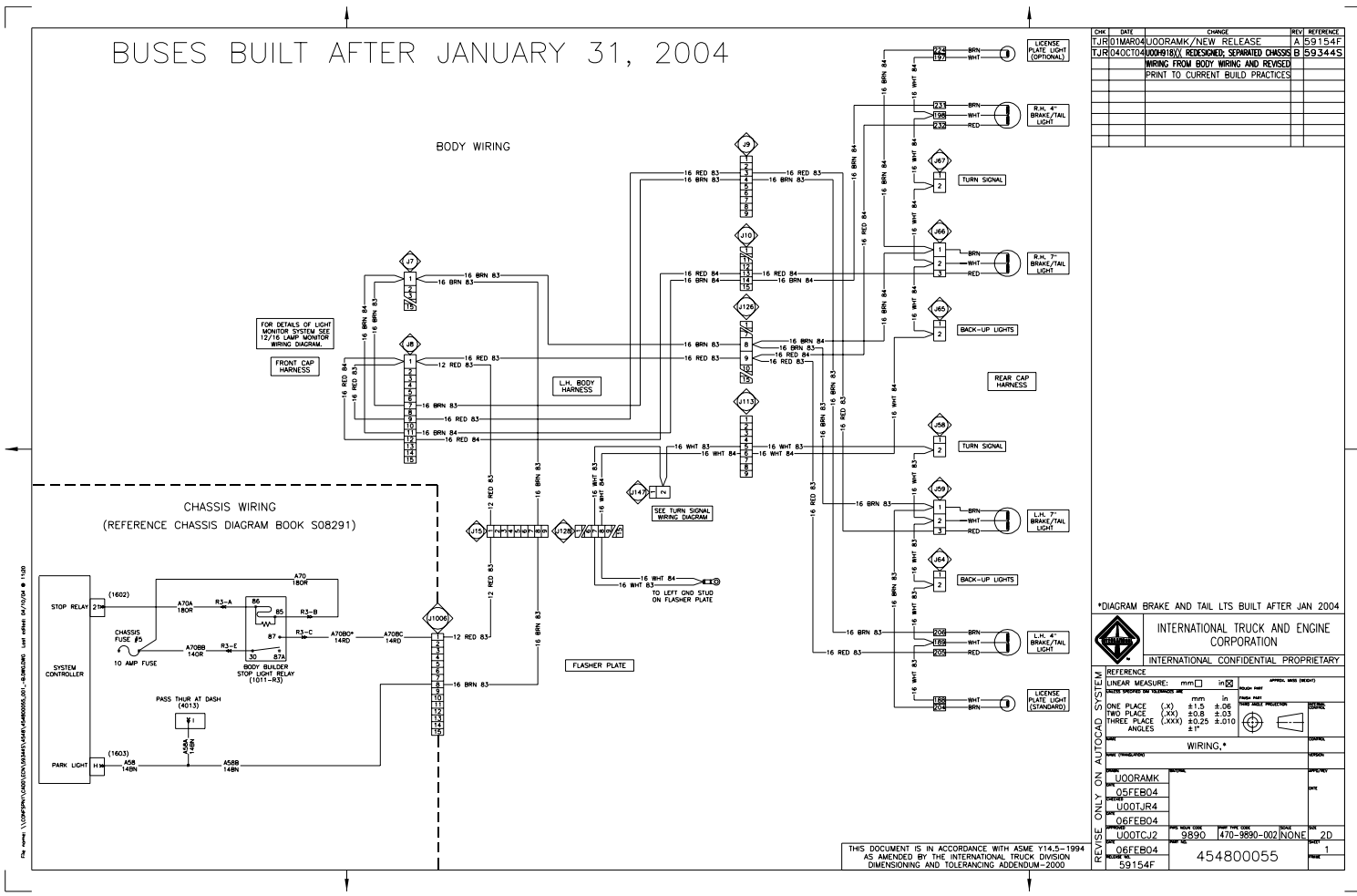

Figure 237 Tail Lights / Brake Lights — Built February 2004 to Present

8.12. BACK-UP LIGHTS ACTIVATED BY REAR DOOR AFTER 4–12–2004

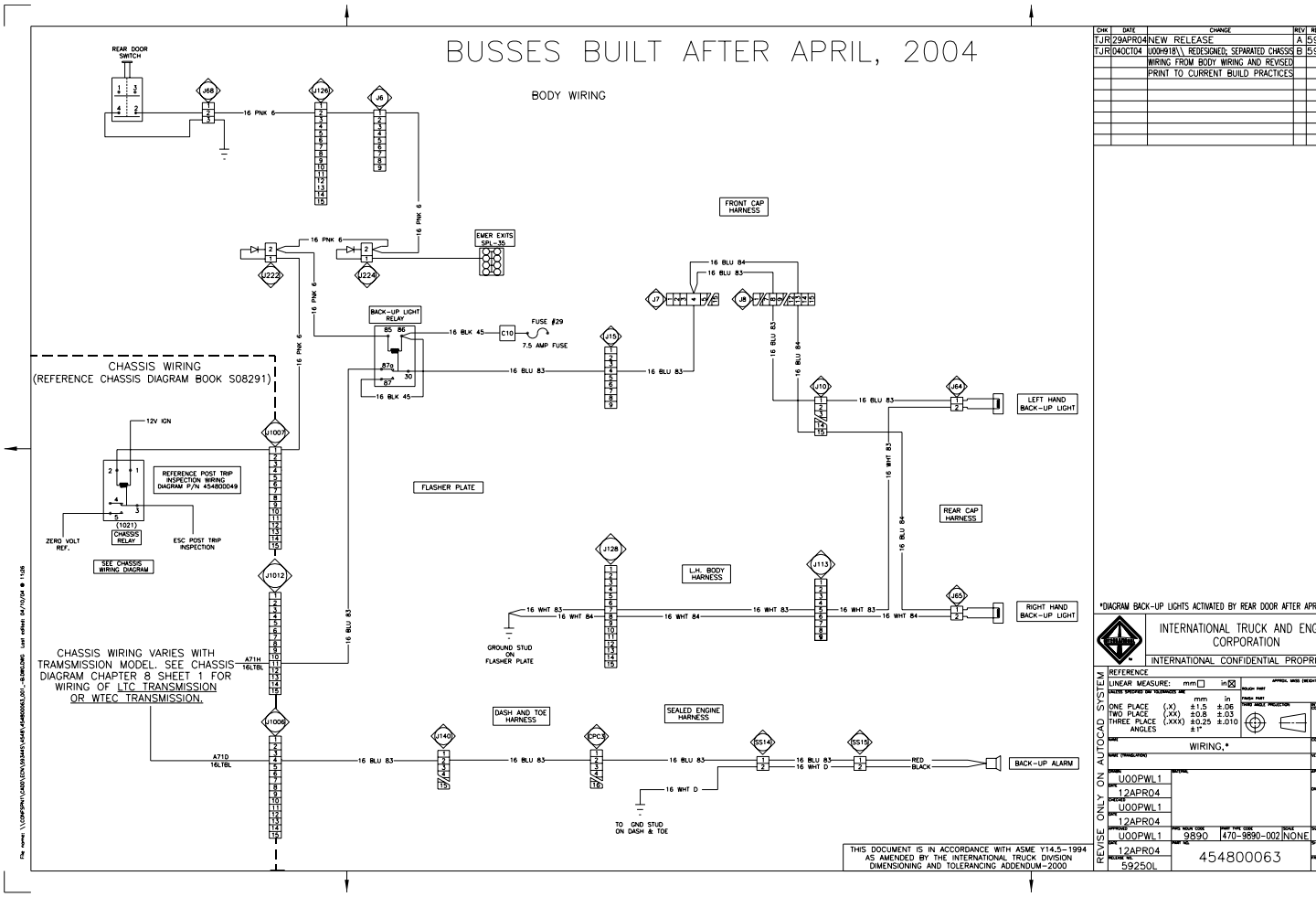

Figure 238 Back-Up Lights Activated by Rear Door After 4–12–2004

8.13. STROBE LIGHT ACTIVATED BY AMBER AND RED WARNING LIGHTS OR ROCKER SWITCH

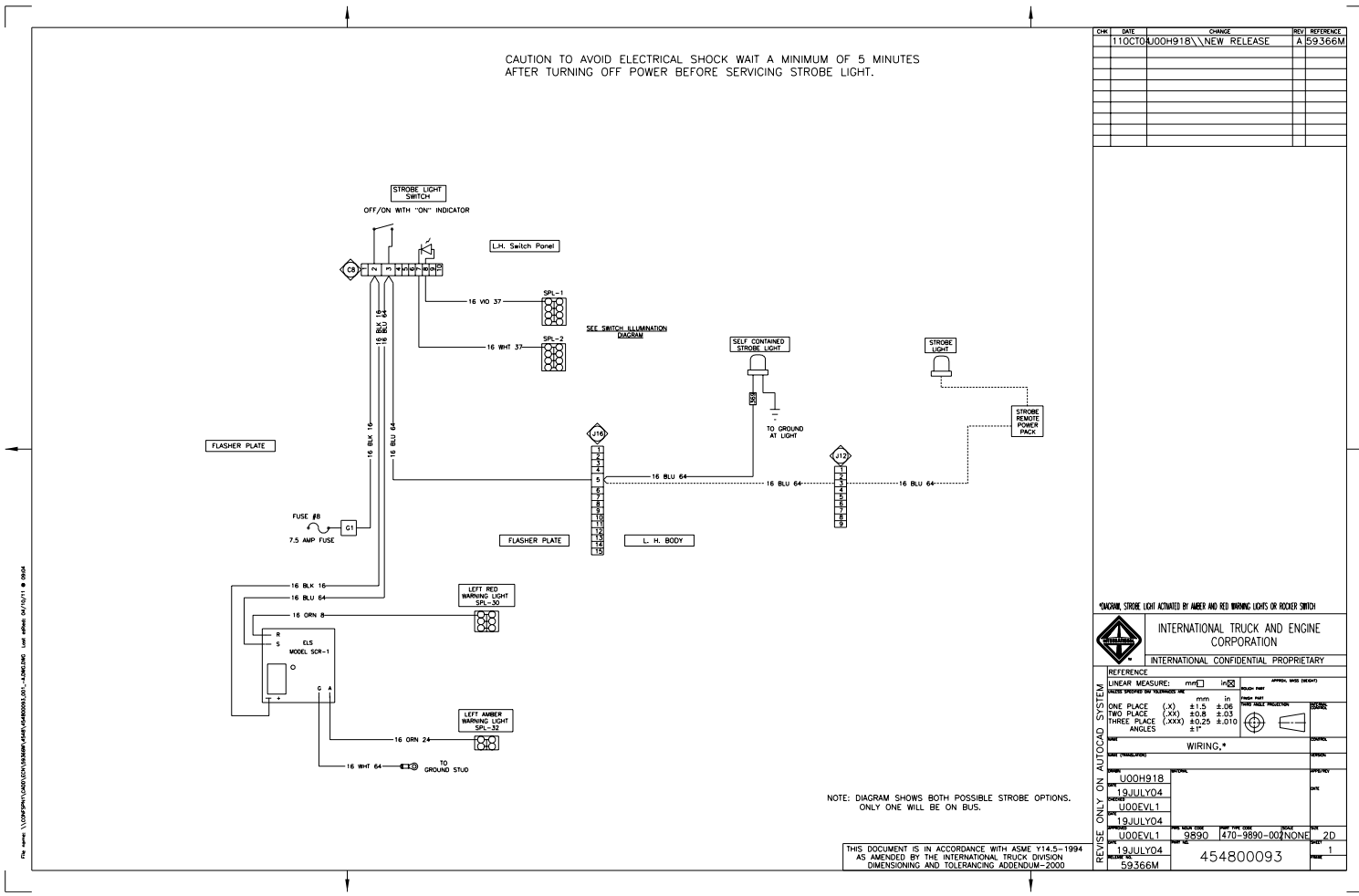

Figure 239 Strobe Light Activated by Amber and Red Warning Lights or Rocker Switch

8.14. STROBE LIGHT ACTIVATED BY RED ONLY WARNING LIGHTS

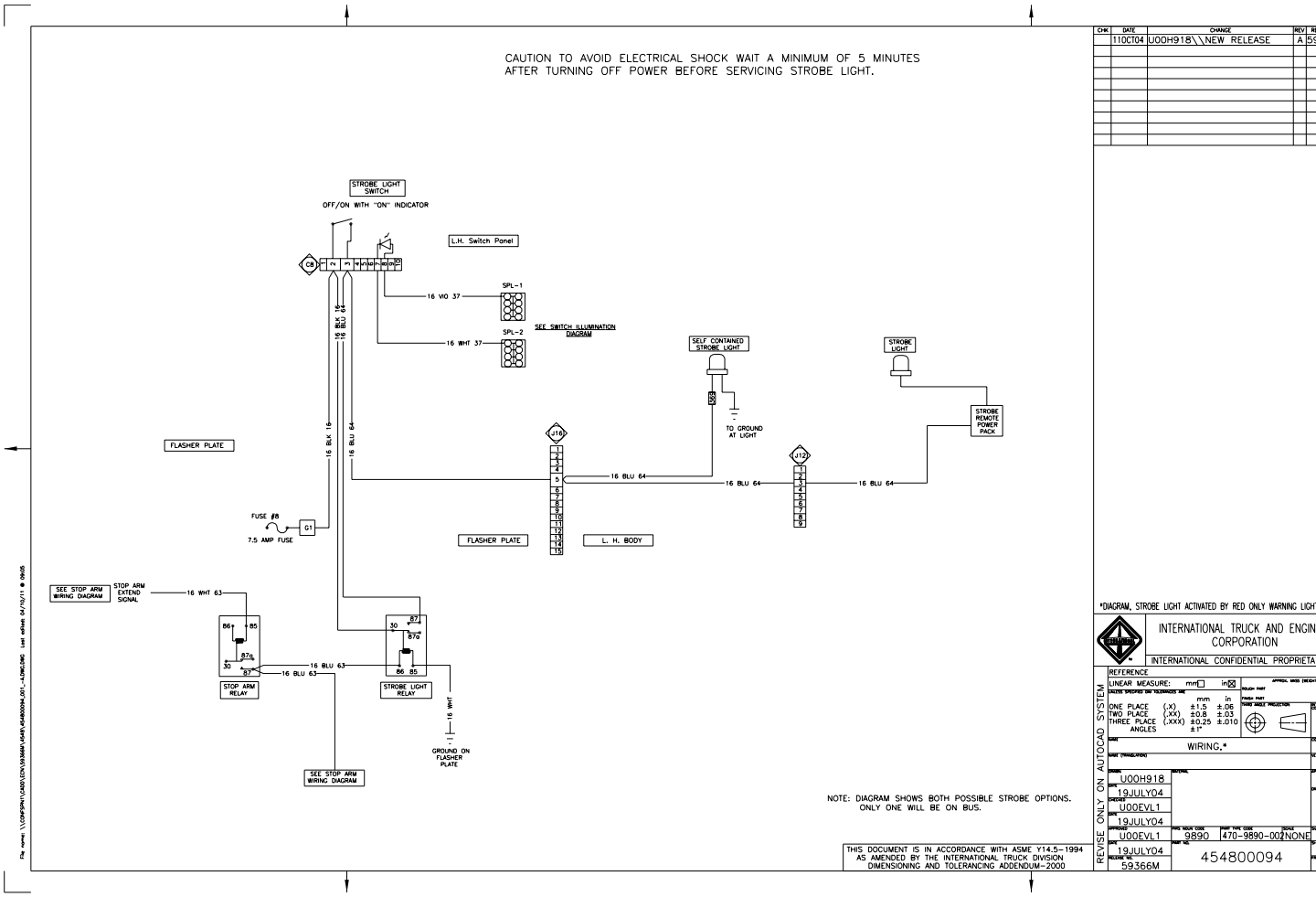

Figure 240 Strobe Light Activated by Red Only Warning Lights

8.15. STROBE LIGHT ACTIVATED BY IGNITION

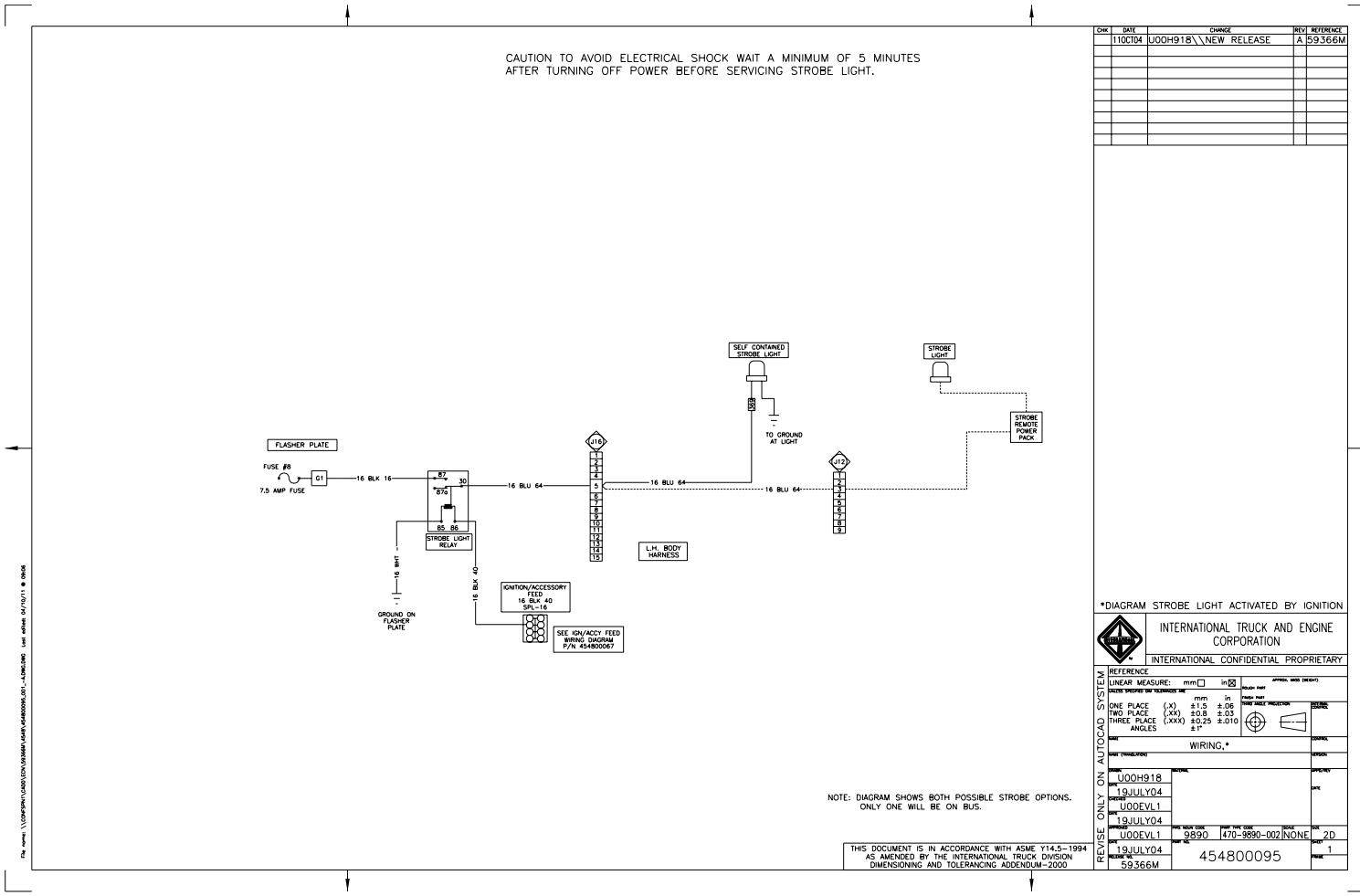

Figure 241 Strobe Light Activated by Ignition

8.16. SIDE MOUNTED BACK-UP LIGHTS

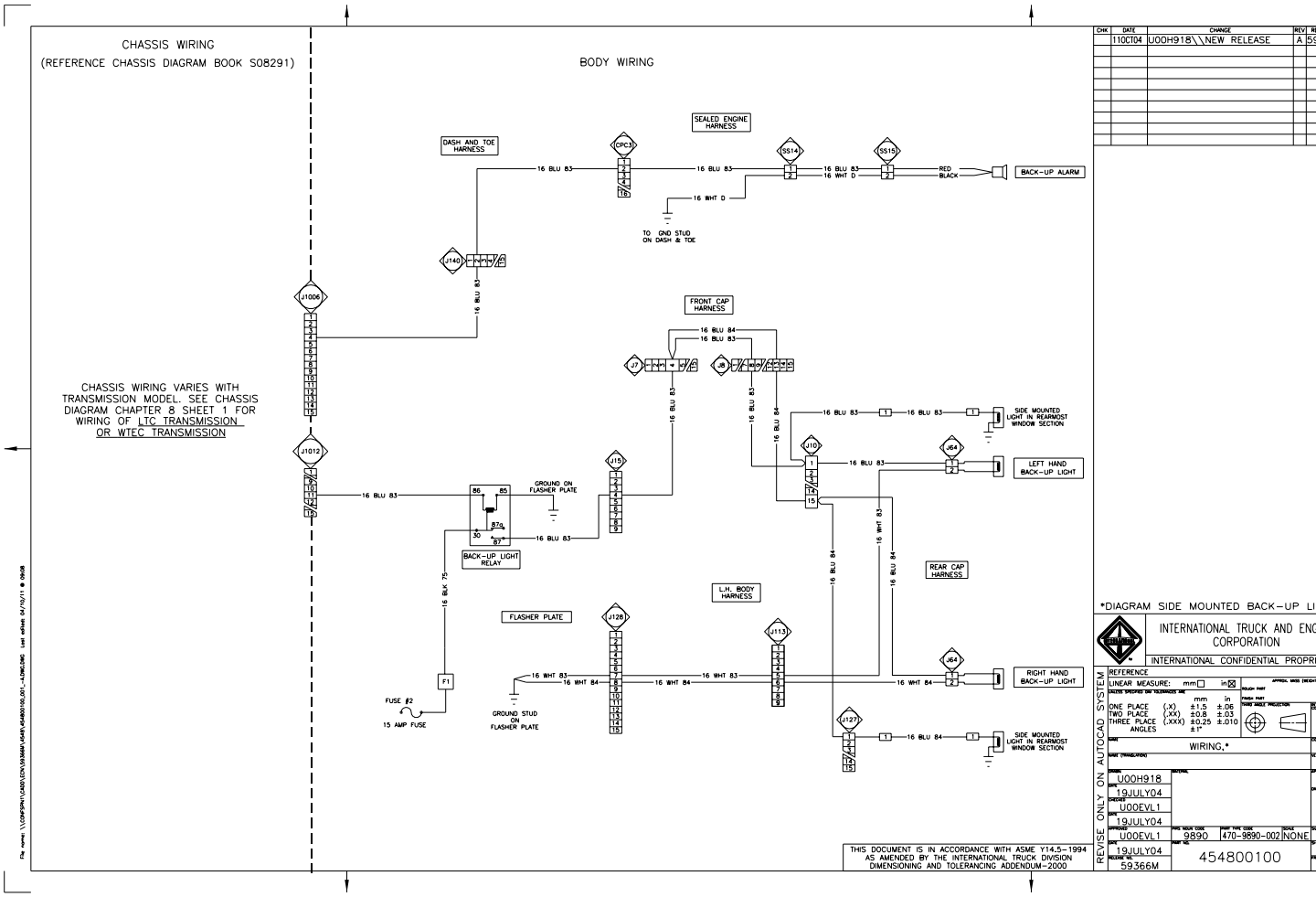

Figure 242 Side Mounted Back-Up Lights

8.17. STOP ARM WITH STROBE LIGHT — AIR FRONT AND REAR

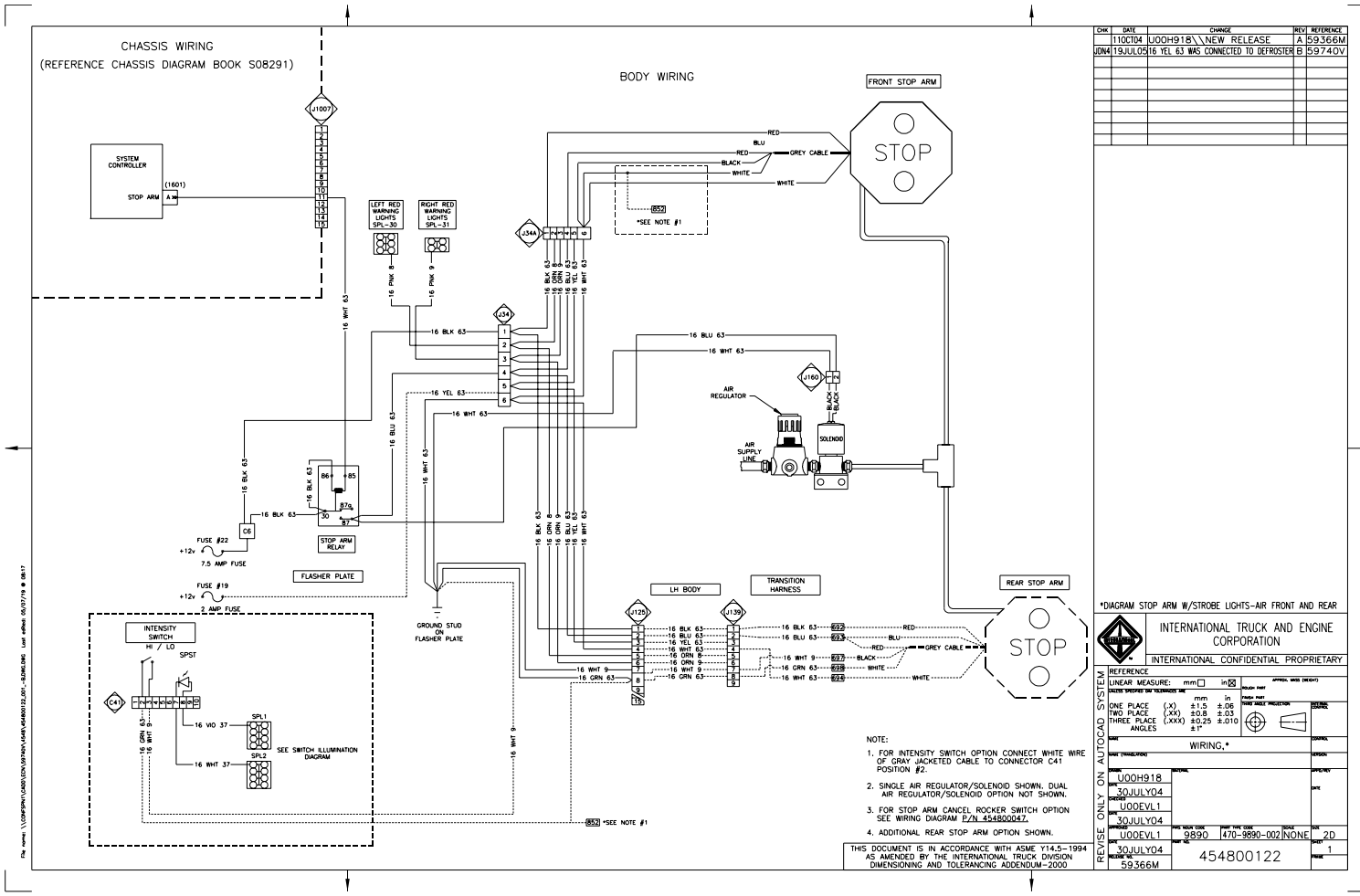

Figure 243 Stop Arm with Strobe Light — Air Front and Rear

8.18. STOP ARM WITH STROBE LIGHTS — ELECTRIC FRONT AND REAR

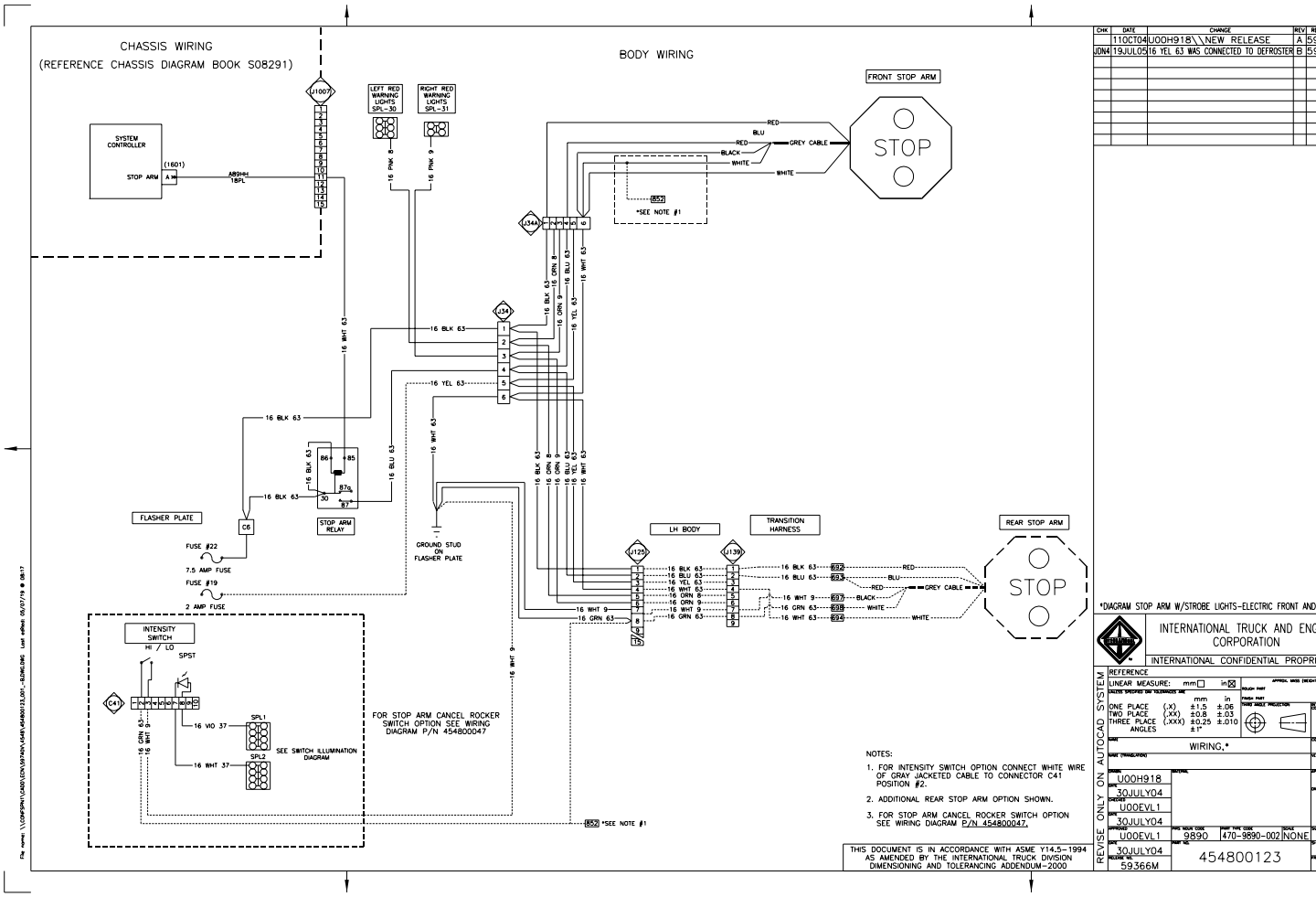

Figure 244 Stop Arm with Strobe Lights — Electric Front and Rear

9. EMERGENCY EXITS (CHAPTER 9)

9.1. KICK OUT WINDOWS

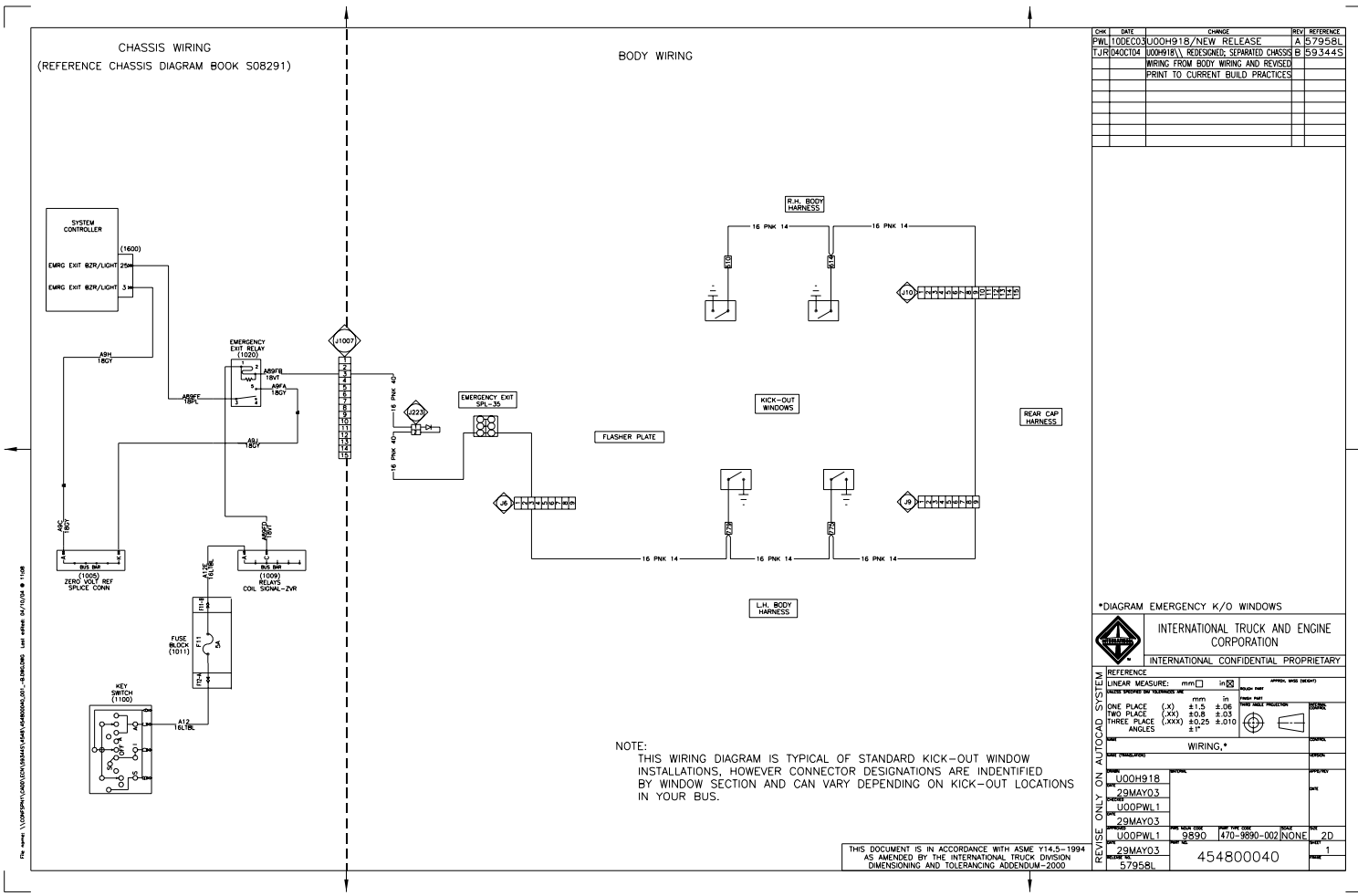

Figure 245 Kick Out Windows

9.2. ROOF HATCHES

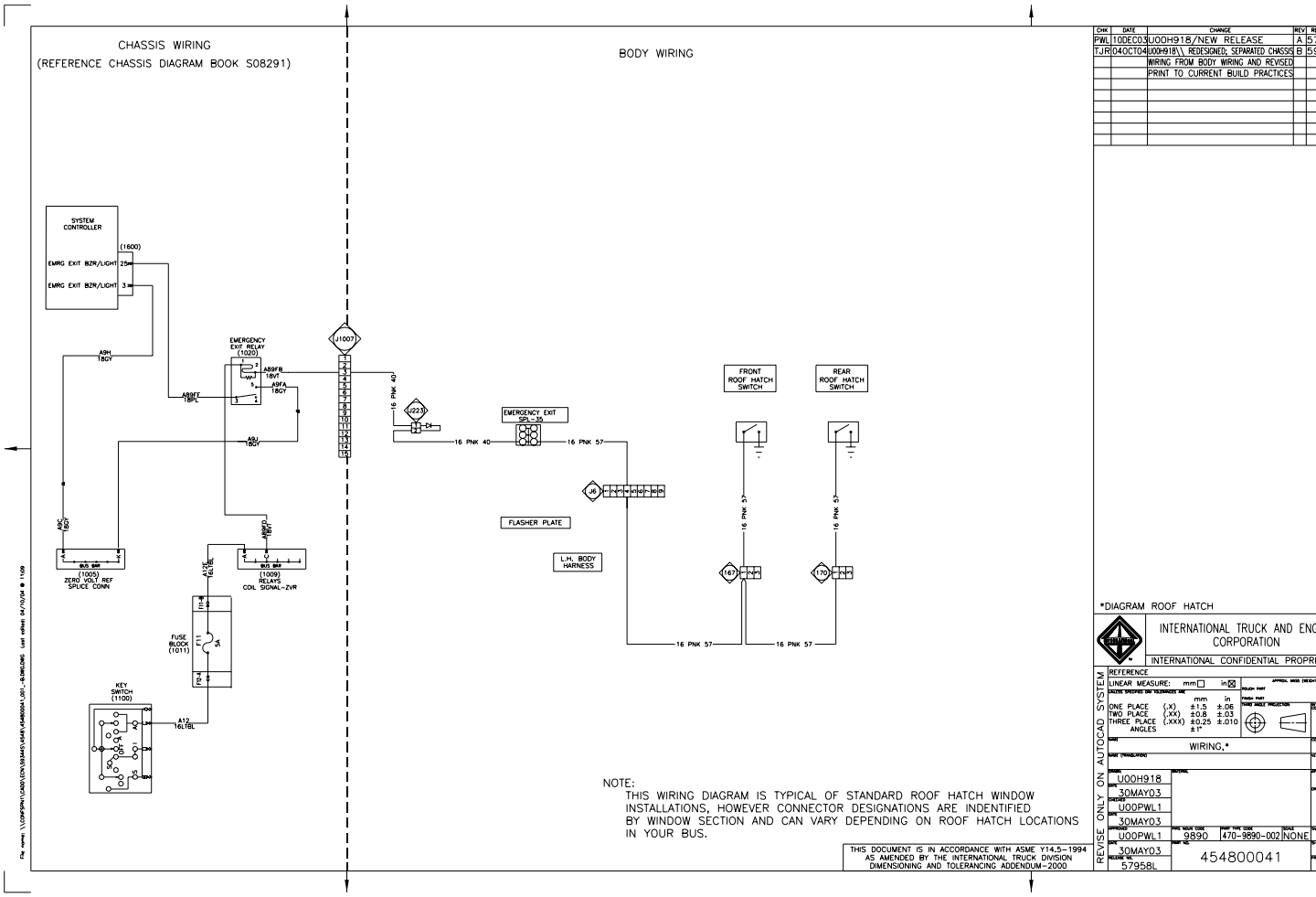

Figure 246 Roof Hatches

9.3. EMERGENCY EXIT DOORS

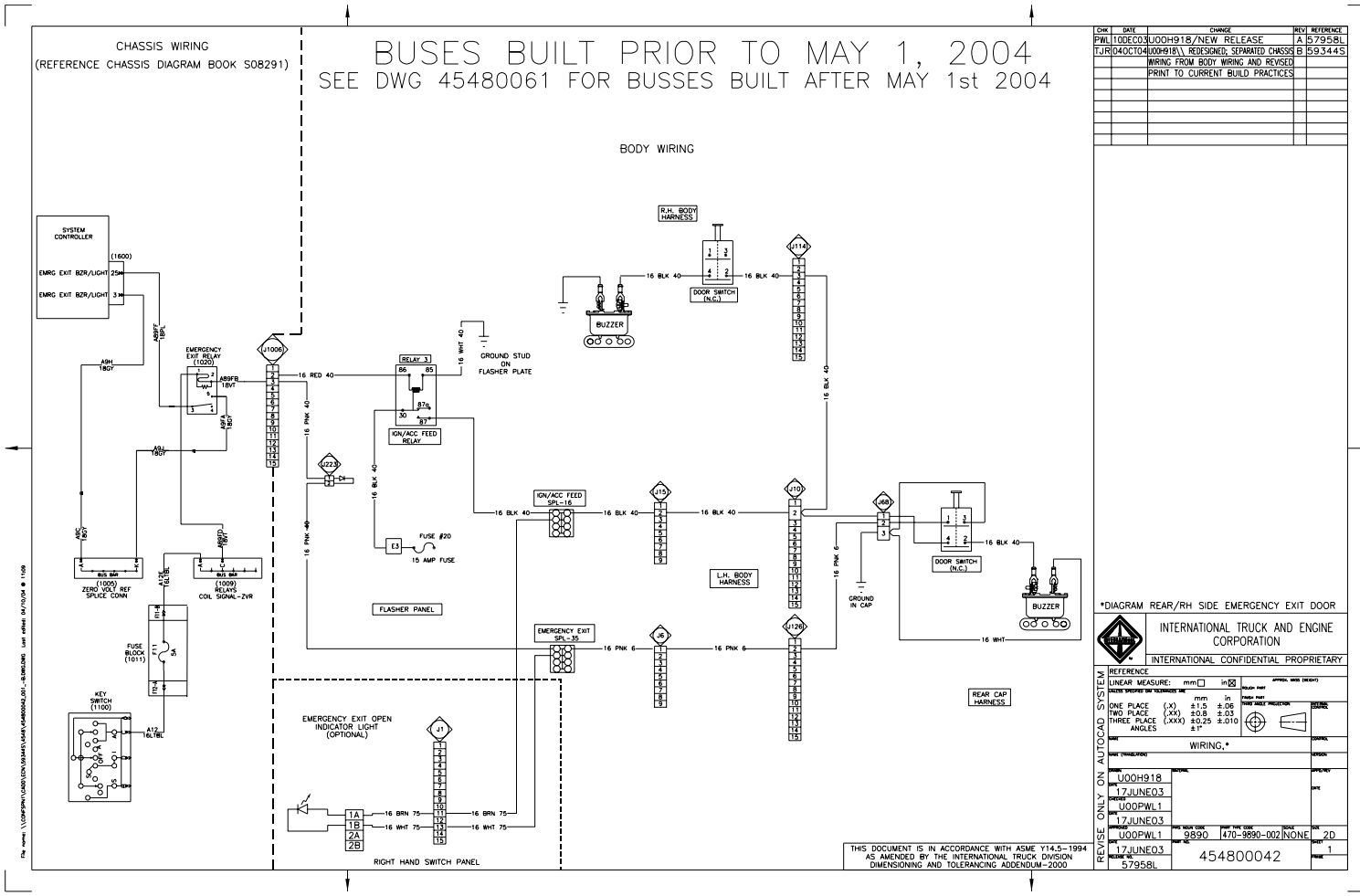

Figure 247 Emergency Exit Doors

9.4. EMERGENCY EXIT BUZZERS

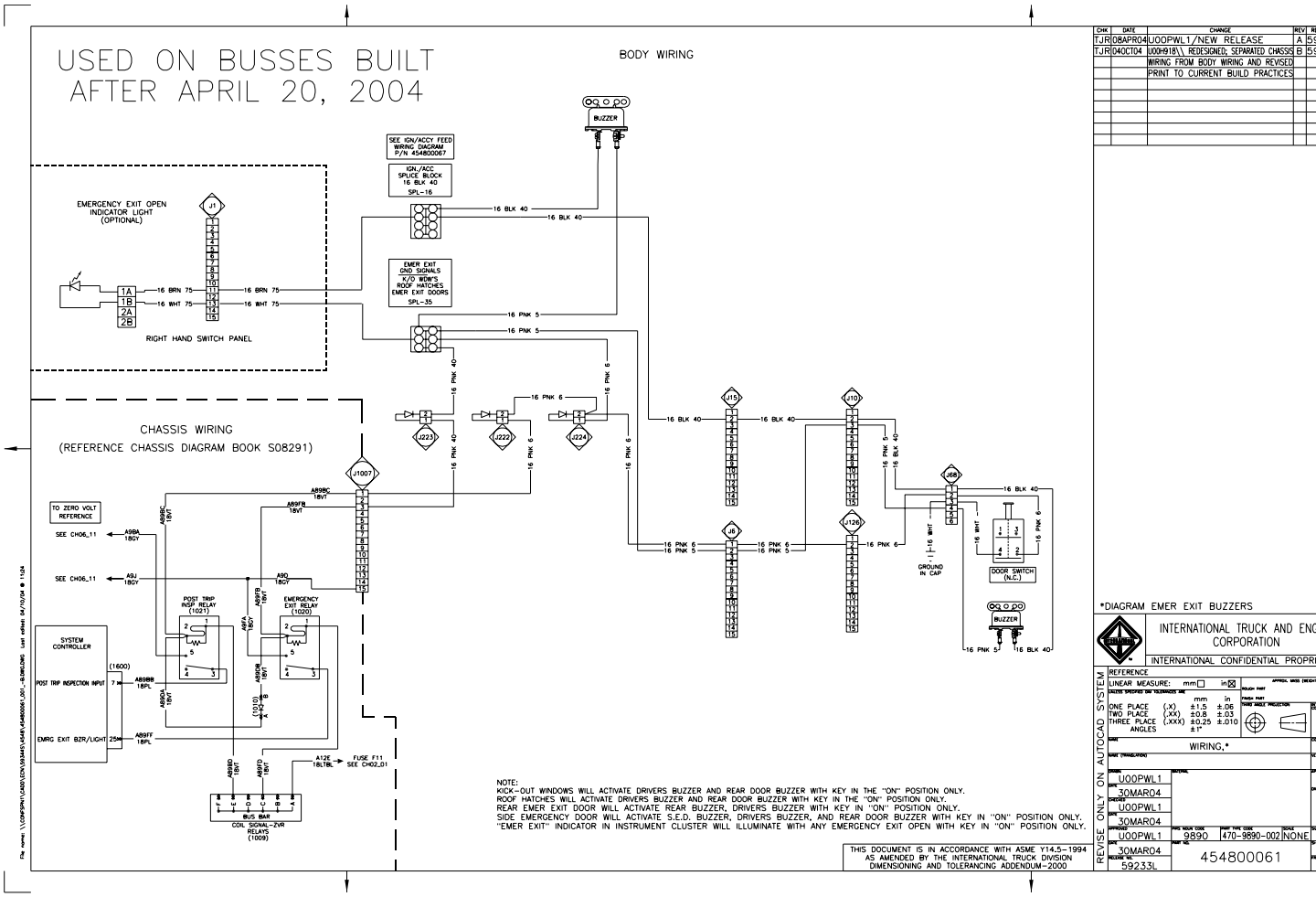

Figure 248 Emergency Exit Buzzers

9.5. ROOF HATCH WITH SINGLE SPEED POWER VENT

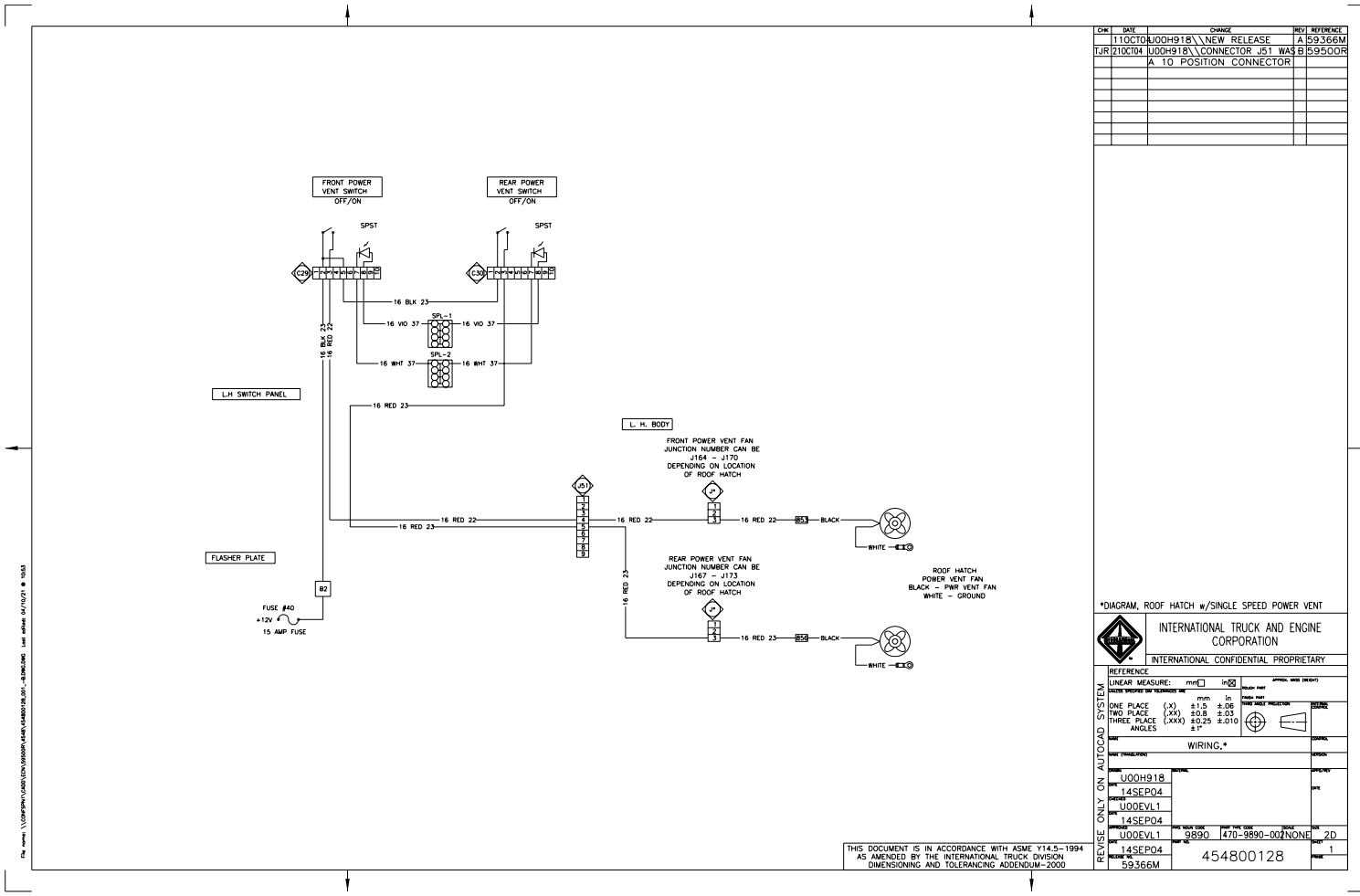

Figure 249 Roof Hatch with Single Speed Power Vent

9.6. ROOF HATCH WITH DUAL SPEED POWER VENT

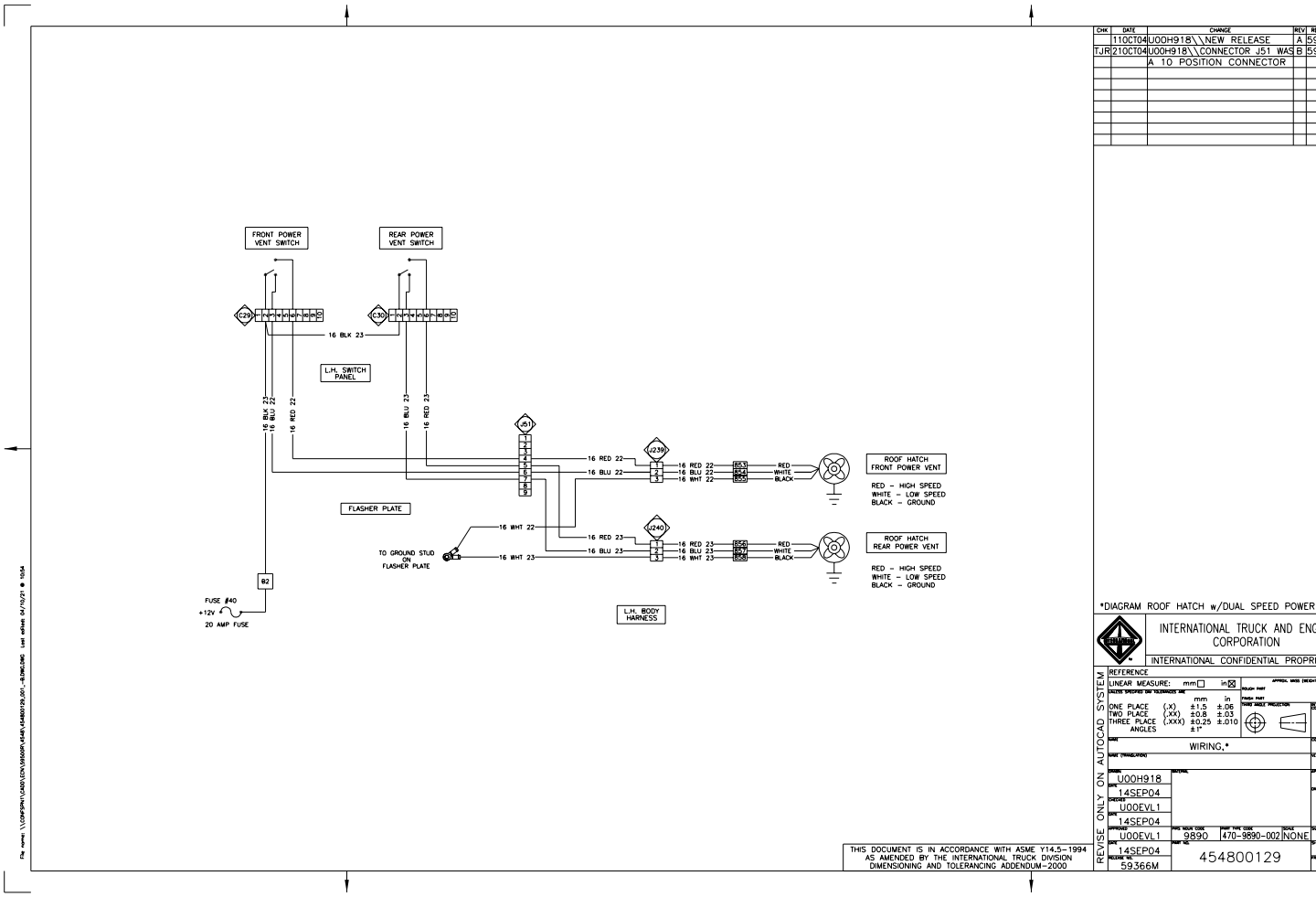

Figure 250 Roof Hatch with Dual Speed Power Vent

10. MIRRORS (CHAPTER 10)

10.1. HEATED MIRRORS (ALL)

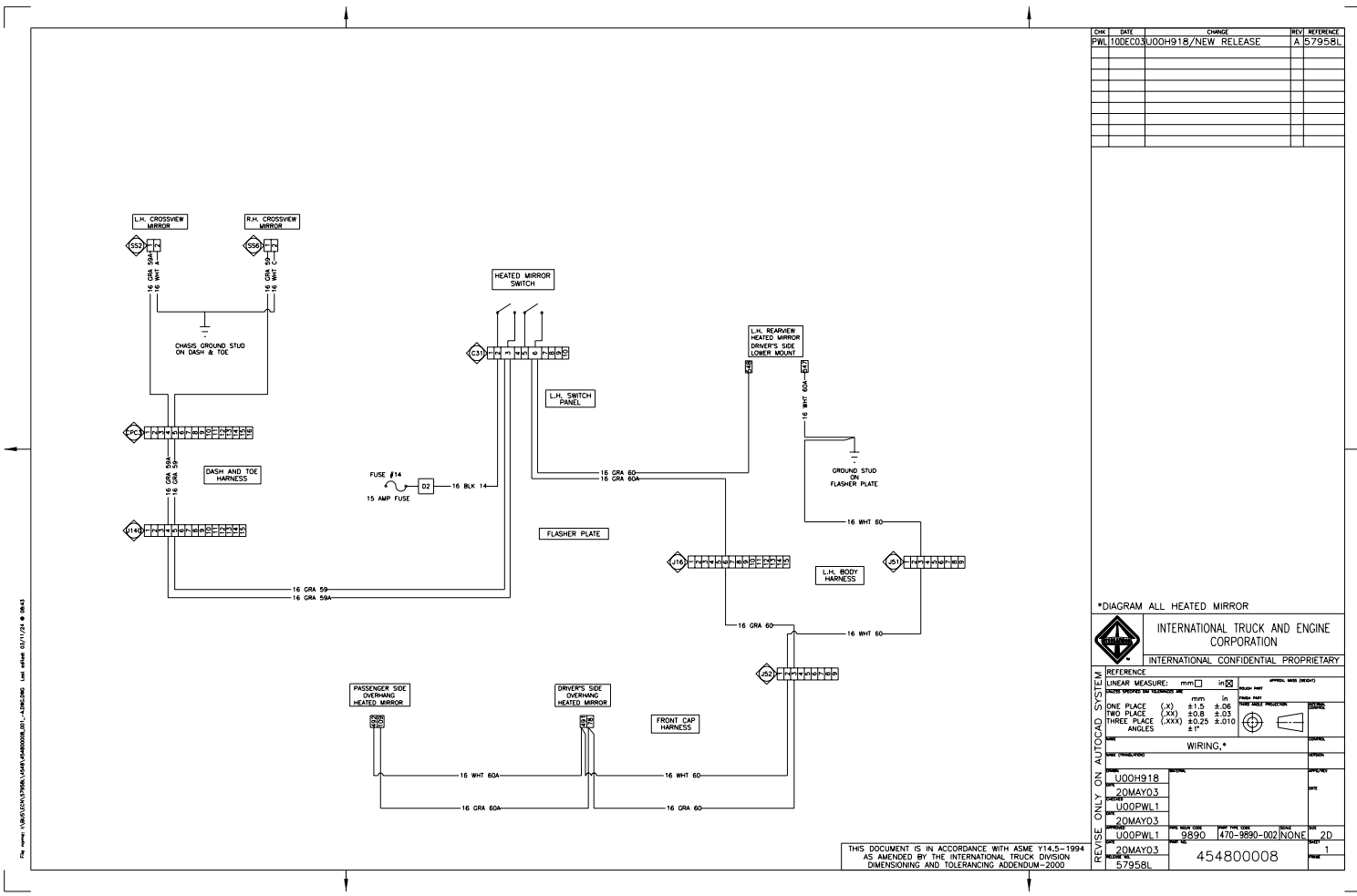

Figure 251 Heated Mirrors (All)

10.2. MOTORIZED / HEATED MIRRORS (ROSCO)

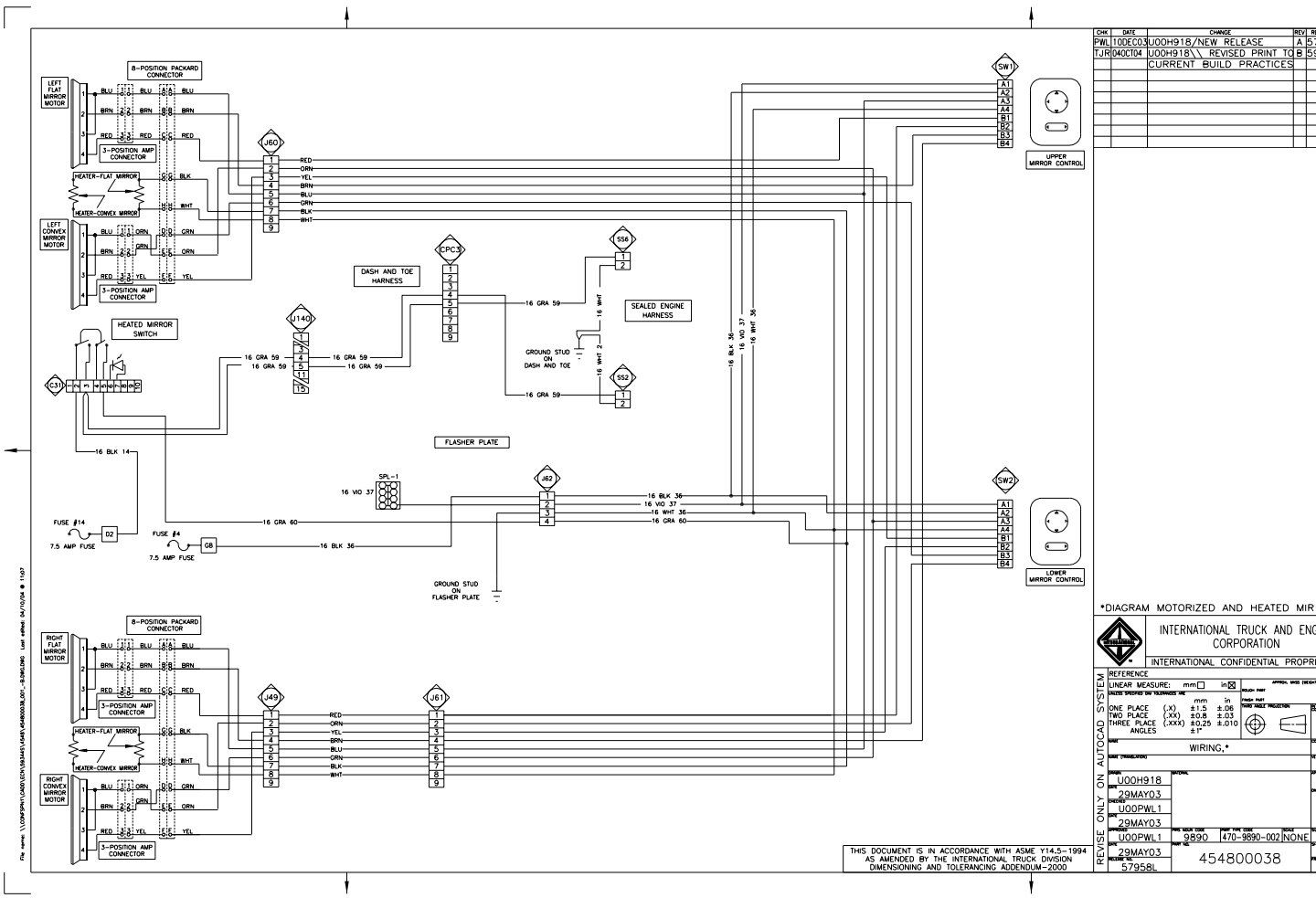

Figure 252 Motorized / Heated Mirrors (Rosco)

10.3. REMOTE MIRROR — HEATED REARVIEW / CROSSVIEW W/IKU SWITCHES

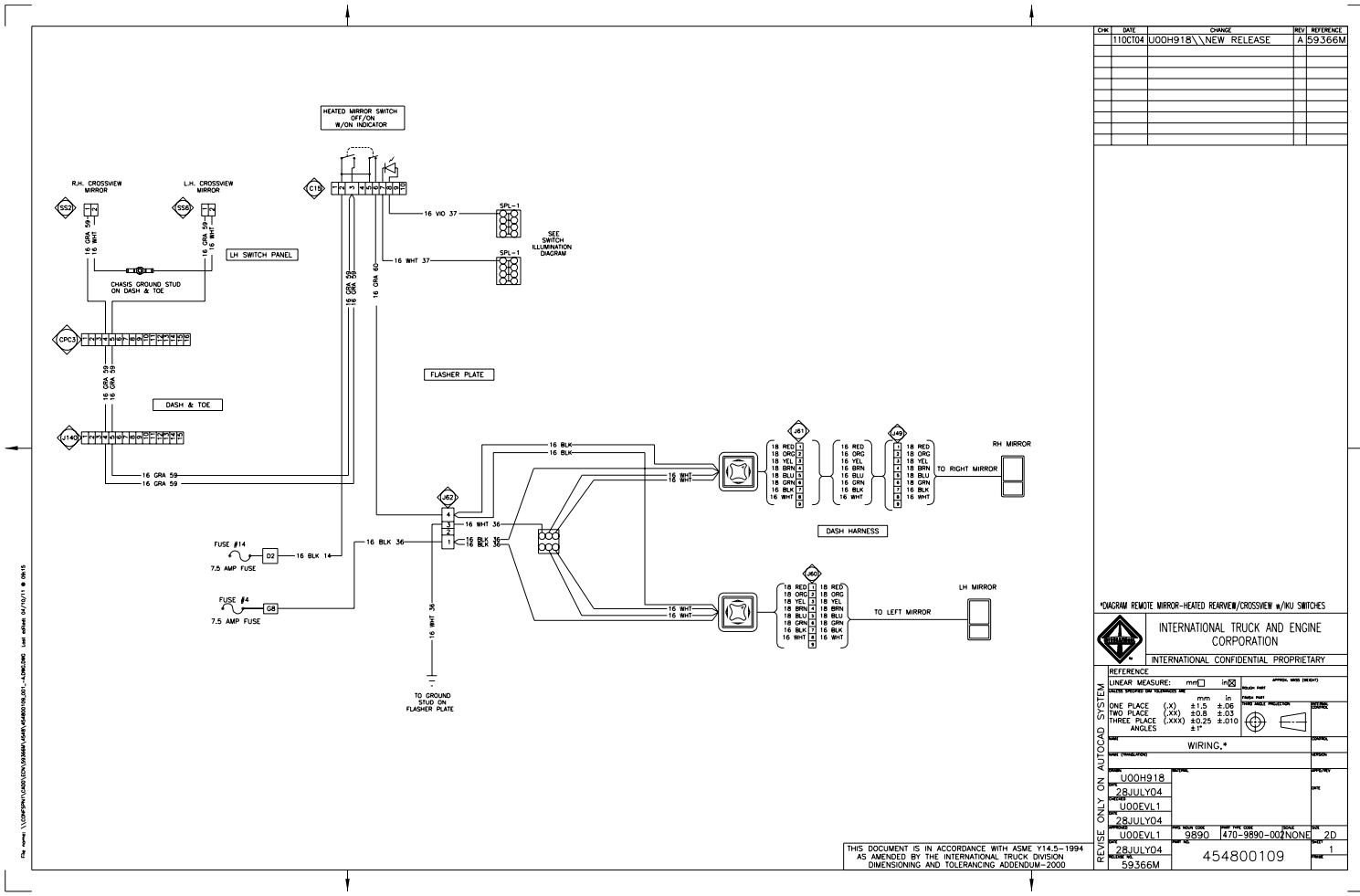

Figure 253 Remote Mirror — Heated Rearview / Crossview w/IKU Switches

10.4. HEATED MIRROR WITH 20 MINUTE TIMER

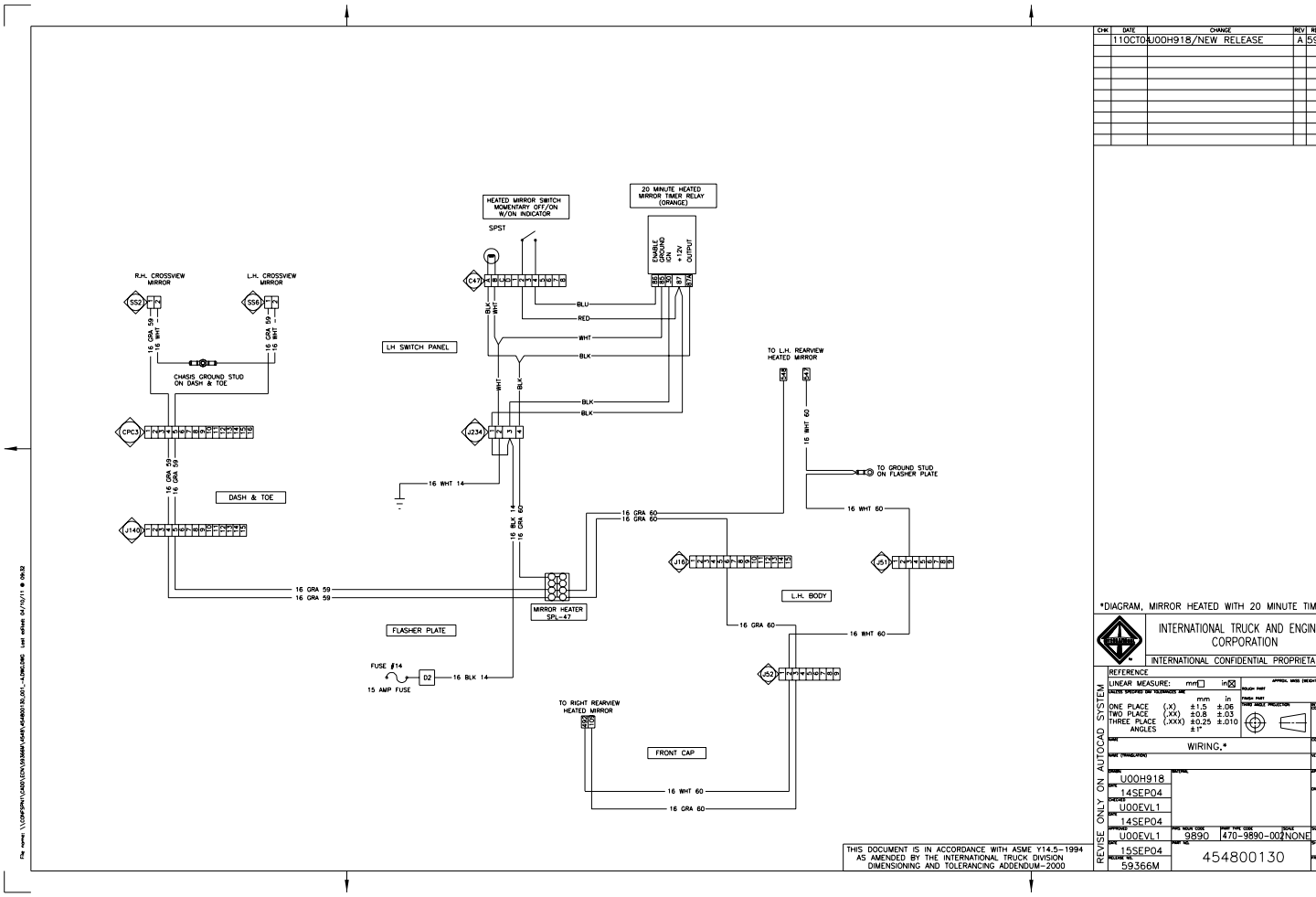

Figure 254 Heated Mirror with 20 Minute Timer

10.5. HEATED / MOTORIZED MIRROR WITH 20 MINUTE TIMER

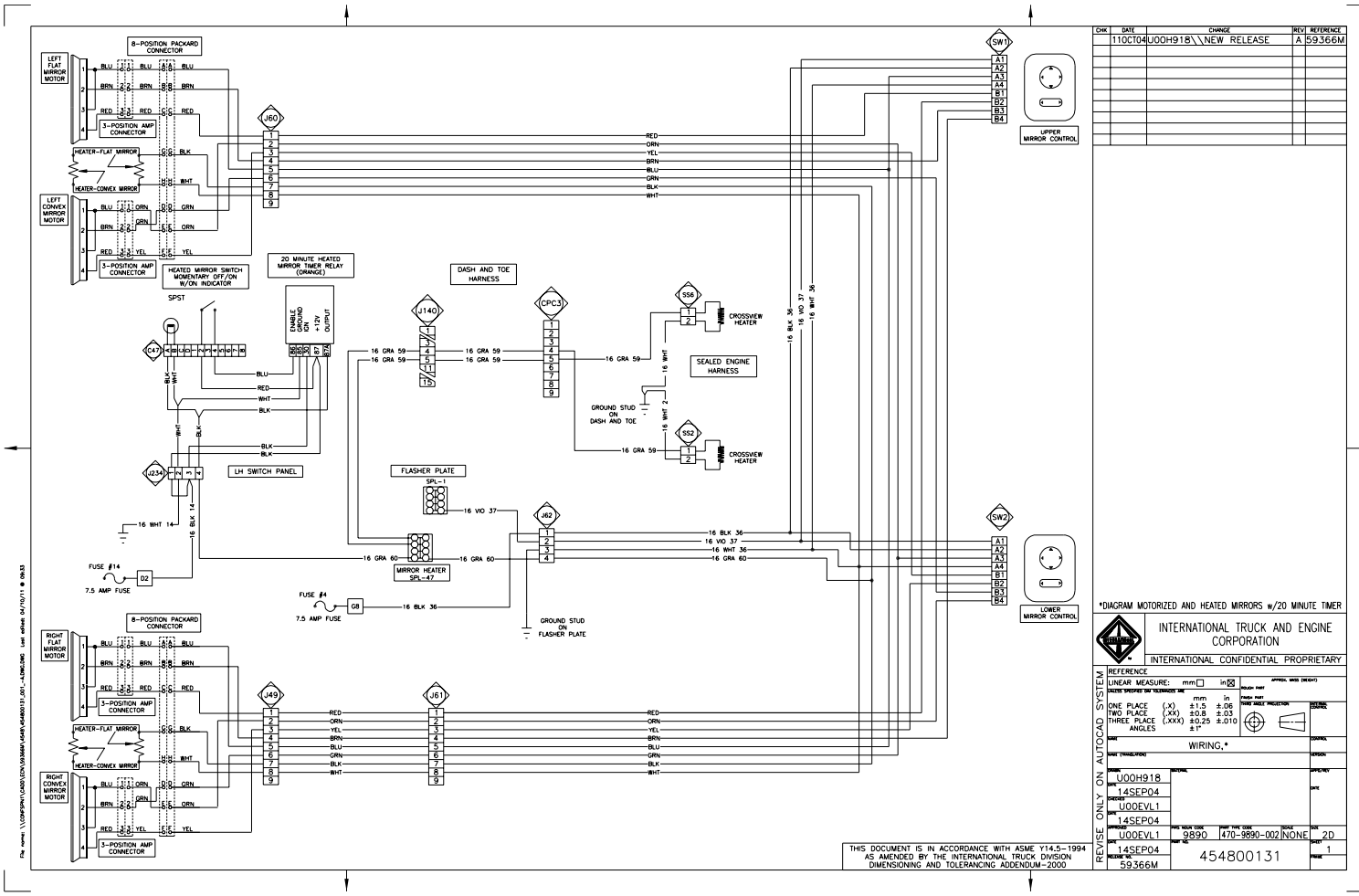

Figure 255 Heated / Motorized Mirror with 20 Minute Timer

11. LIFT DOOR (CHAPTER 11)

11.1. IGNITION FEED DIAGRAM

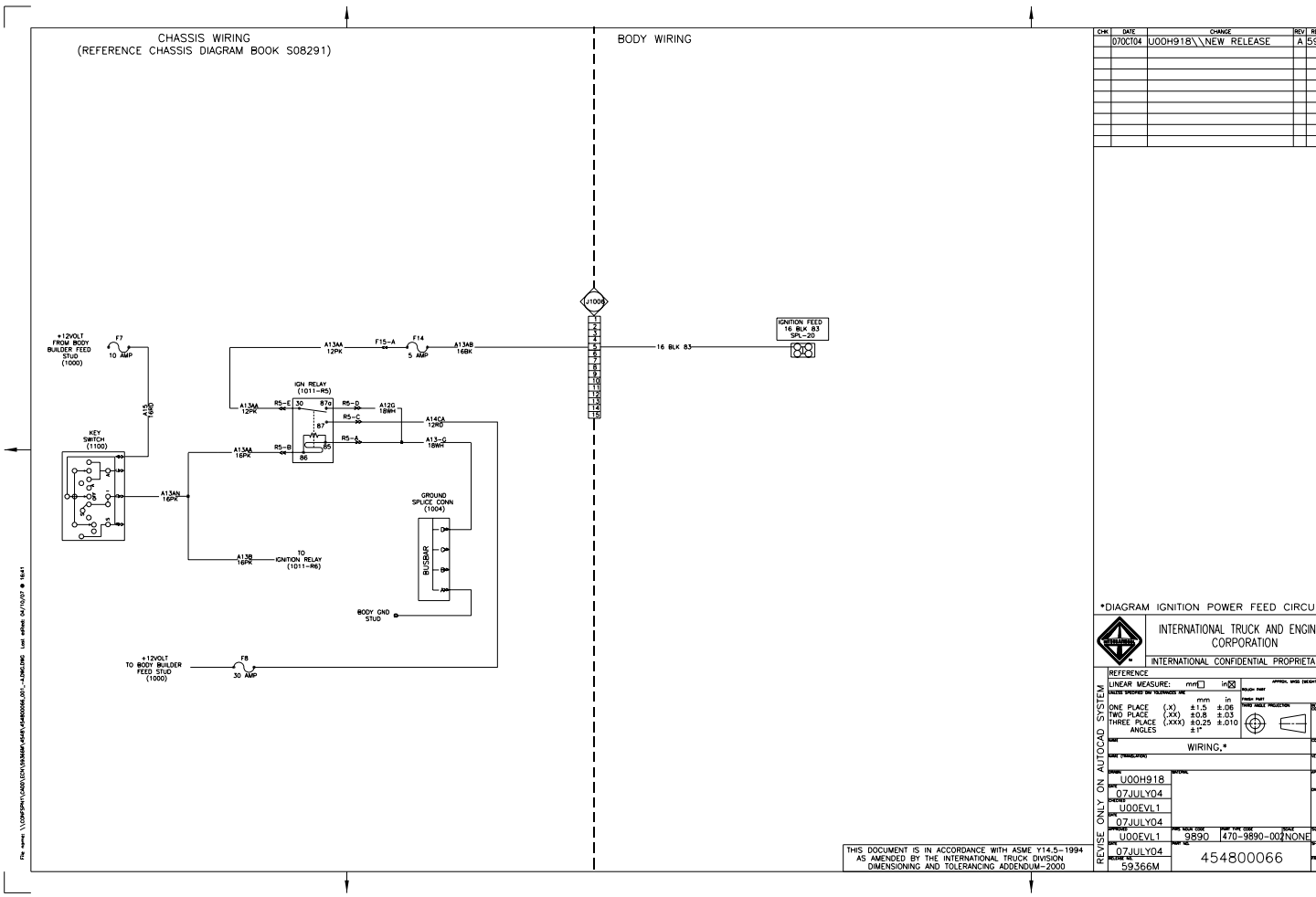

Figure 256 Ignition Feed Diagram

11.2. IGNITION / ACCY FEED DIAGRAM

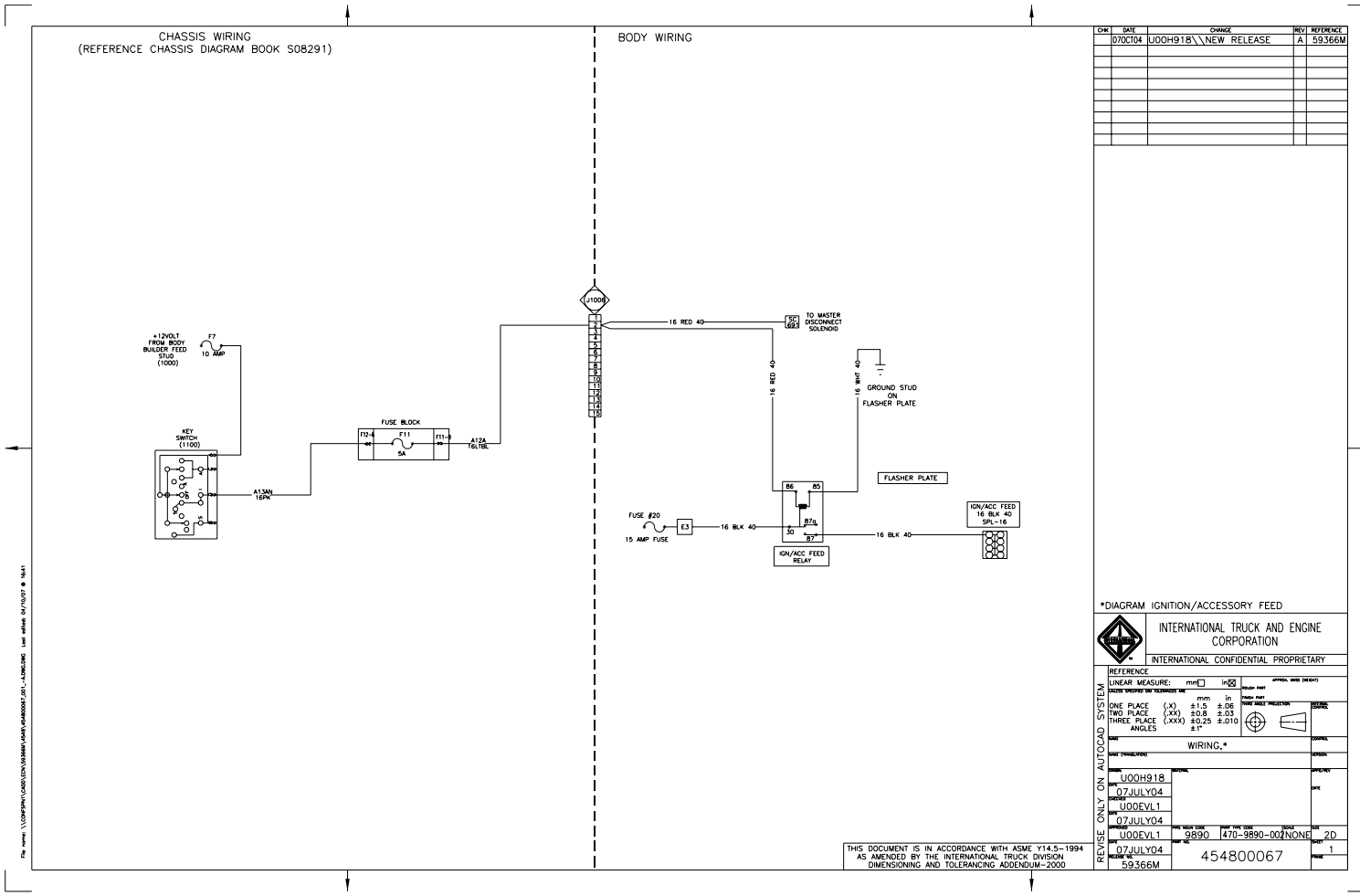

Figure 257 Ignition / Accy Feed Diagram

11.3. ZERO VOLT REFERENCE DIAGRAM

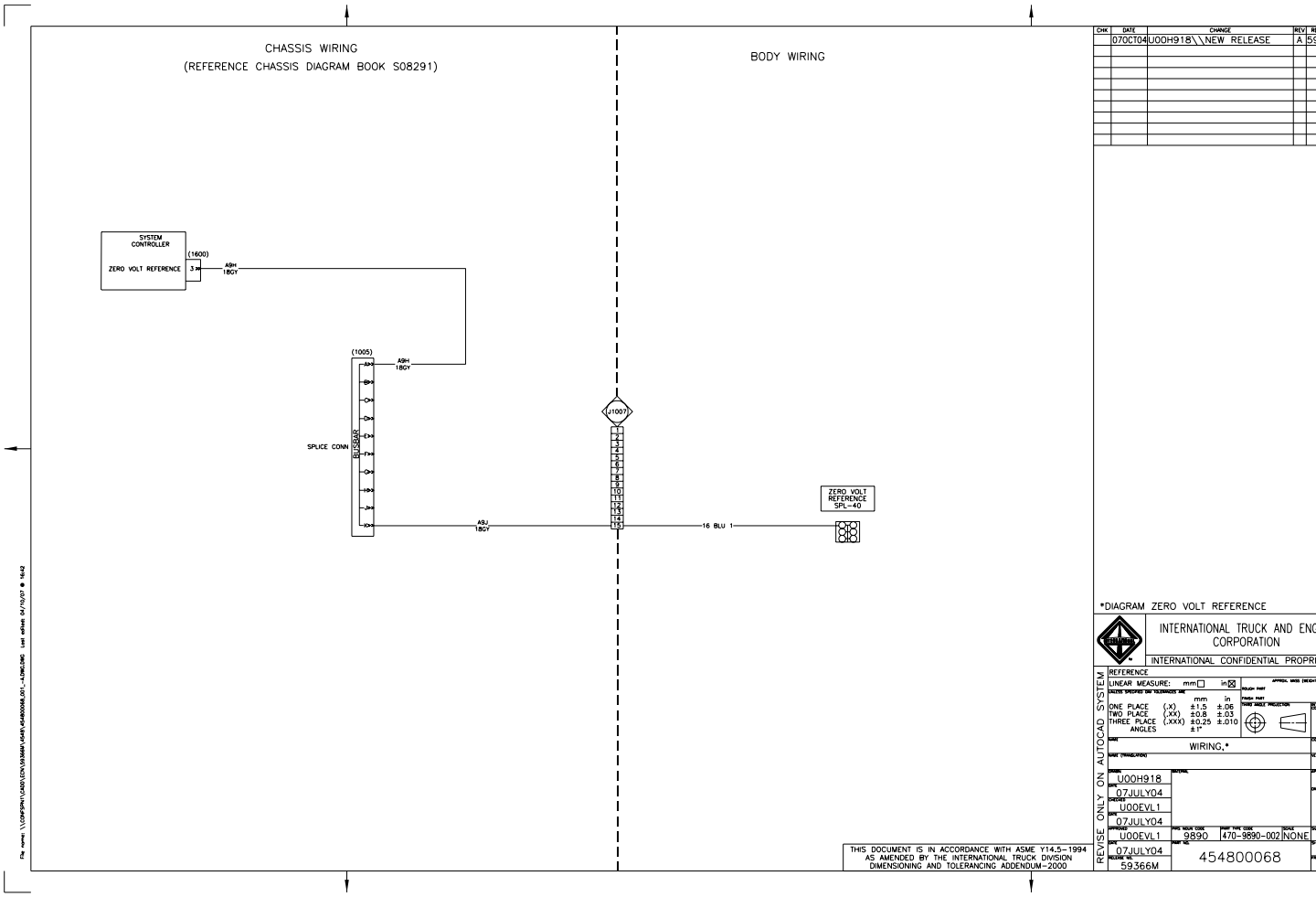

Figure 258 Zero Volt Reference Diagram

11.4. LIFT DOOR WITH FLASHING INDICATOR LIGHT — IN RIGHT SWITCH PANEL

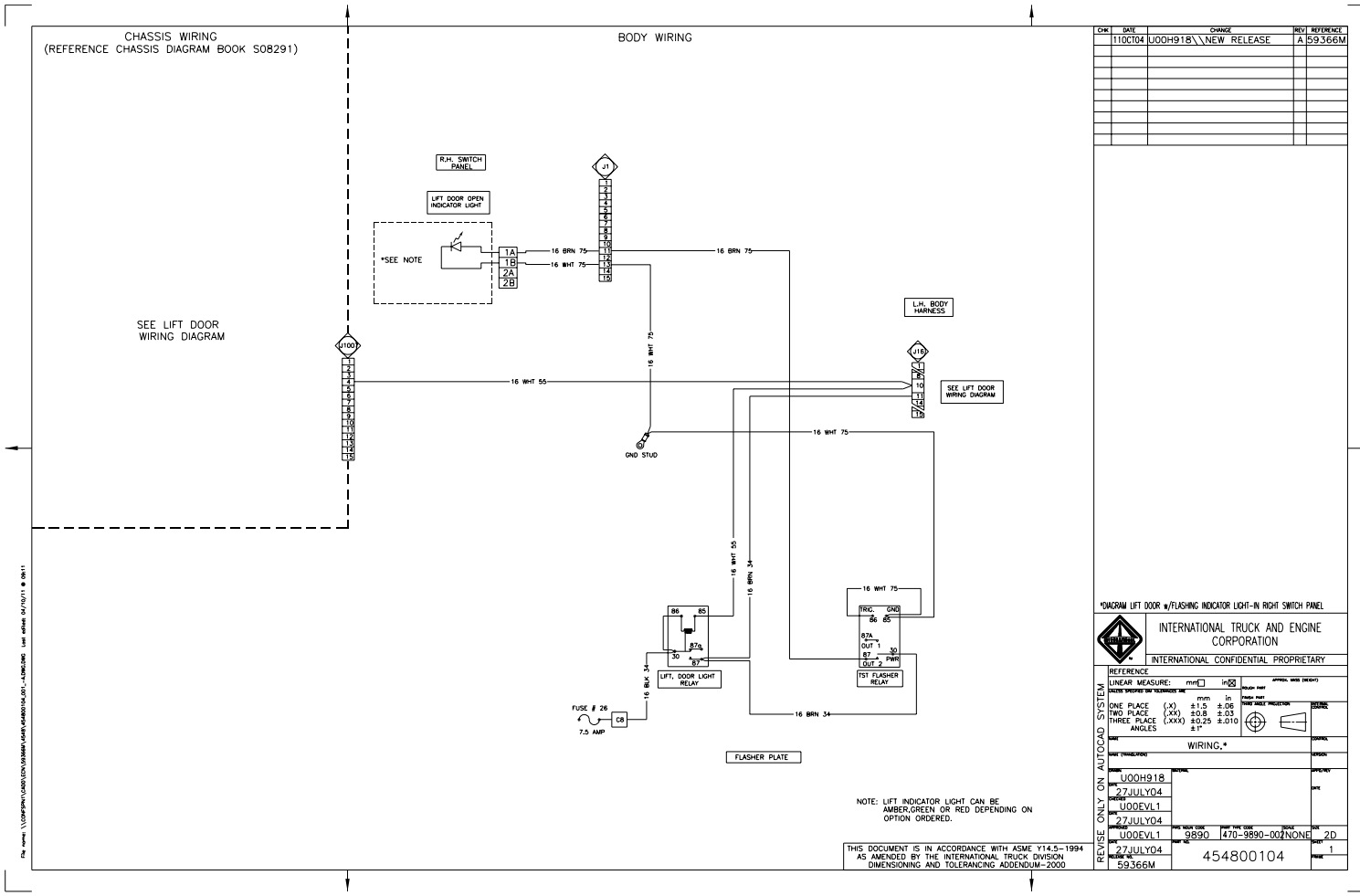

Figure 259 Lift Door with Flashing Indicator Light — In Right Switch Panel

11.5. INTERIOR AND EXTERIOR LIFT LIGHTS WITH TOGGLE SWITCH

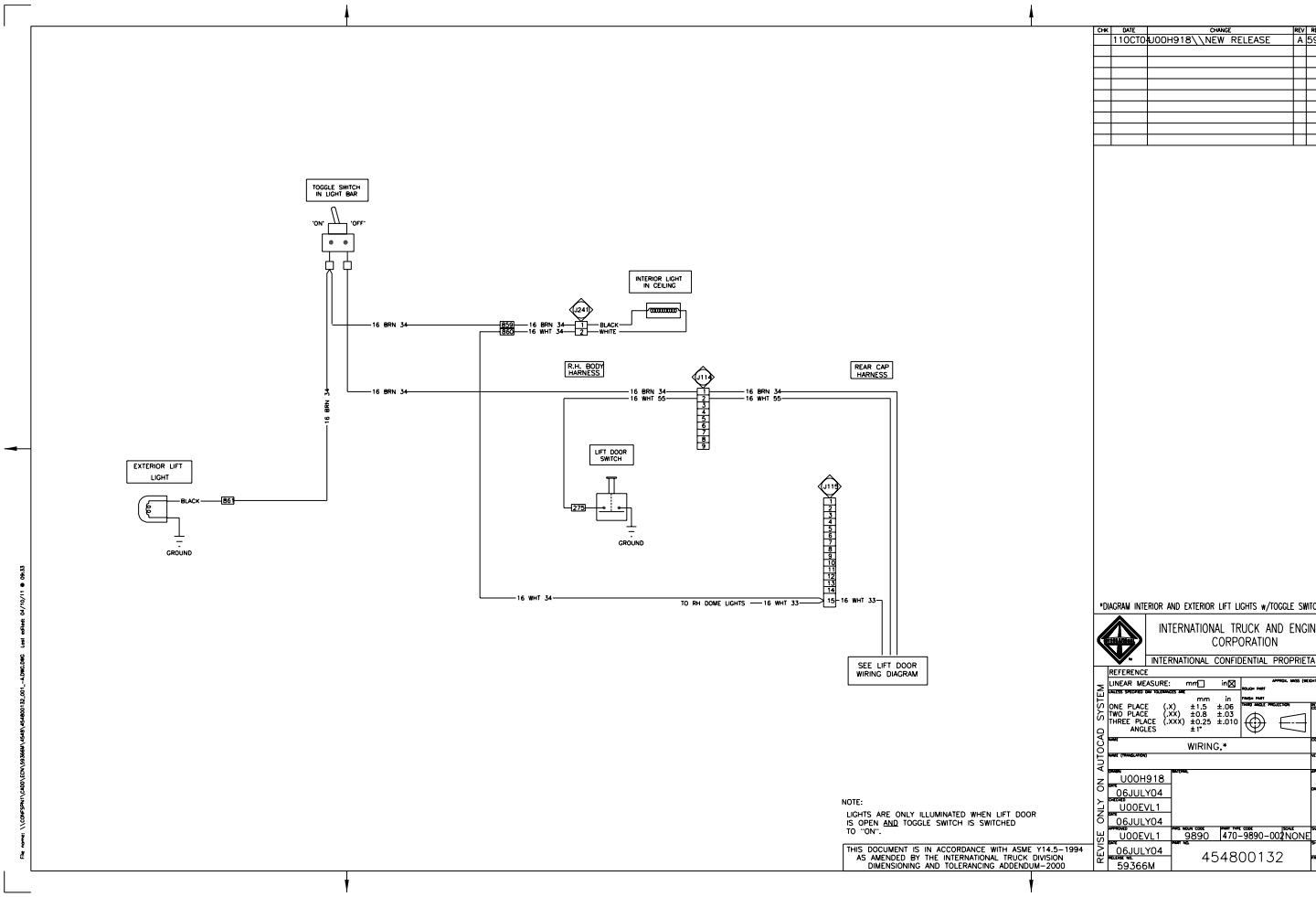

Figure 260 Interior and Exterior Lift Lights with Toggle Switch

11.6. LIFT DOOR / INTERLOCK — AIR BRAKES, LCT TRANS., 49GMM

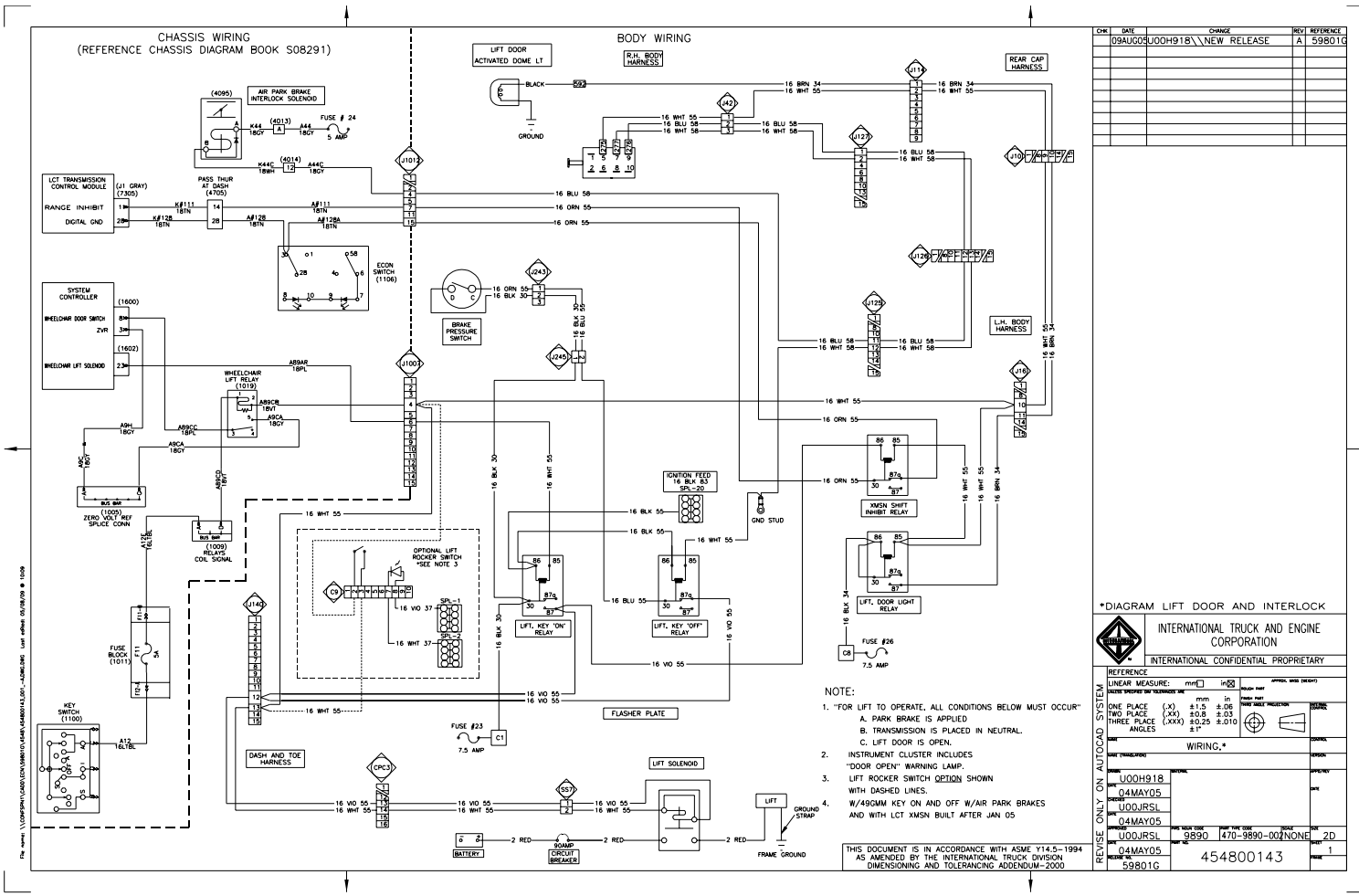

Figure 261 Lift Door / Interlock — Air Brakes, LCT Trans., 49GMM

11.7. LIFT DOOR / INTERLOCK — AIR BRAKES, MD TRANS., 49GMM

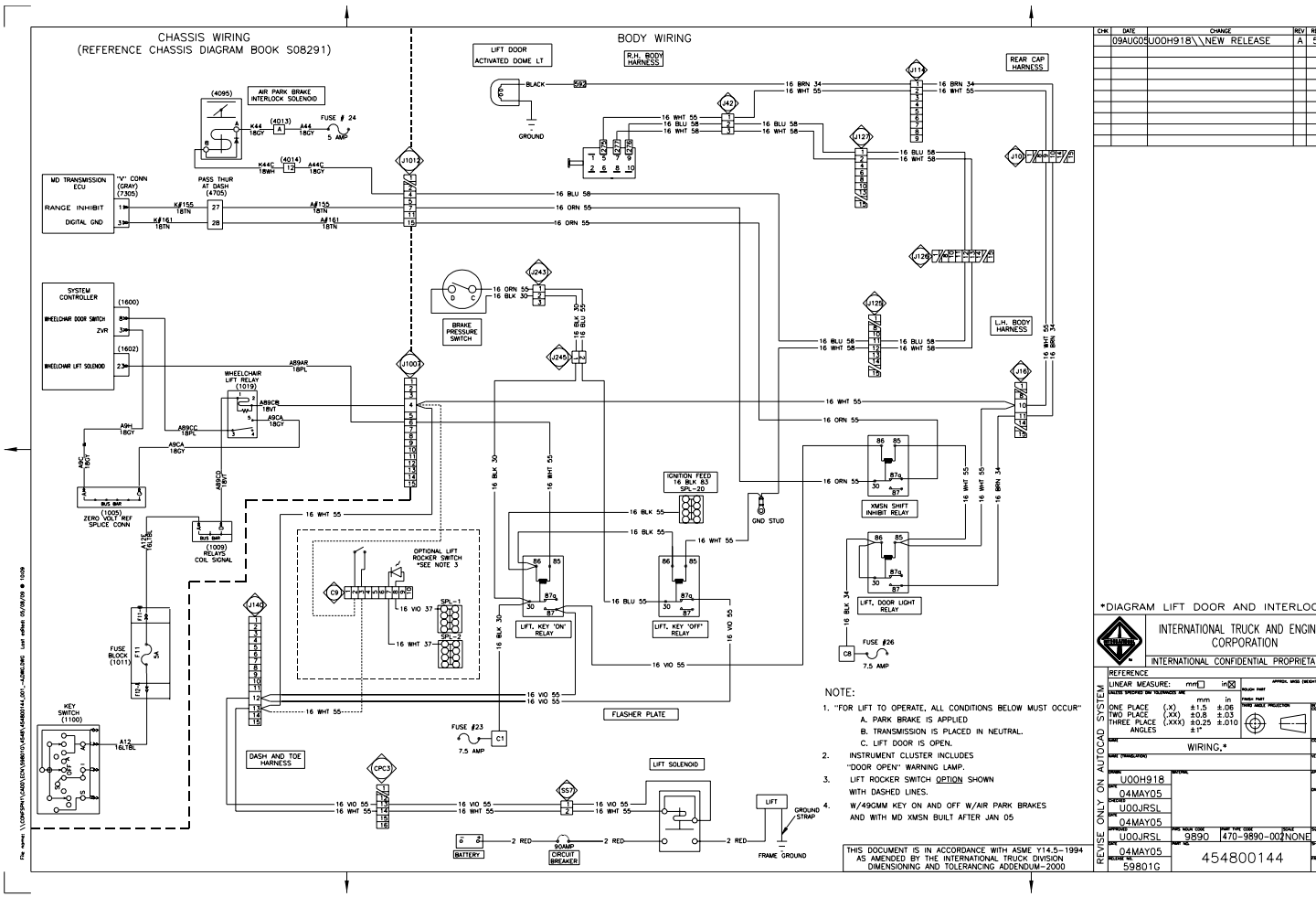

Figure 262 Lift Door / Interlock — Air Brakes, MD Trans., 49GMM

11.8. LIFT DOOR / INTERLOCK — AIR BRAKES, LCT TRANS., 49GLZ

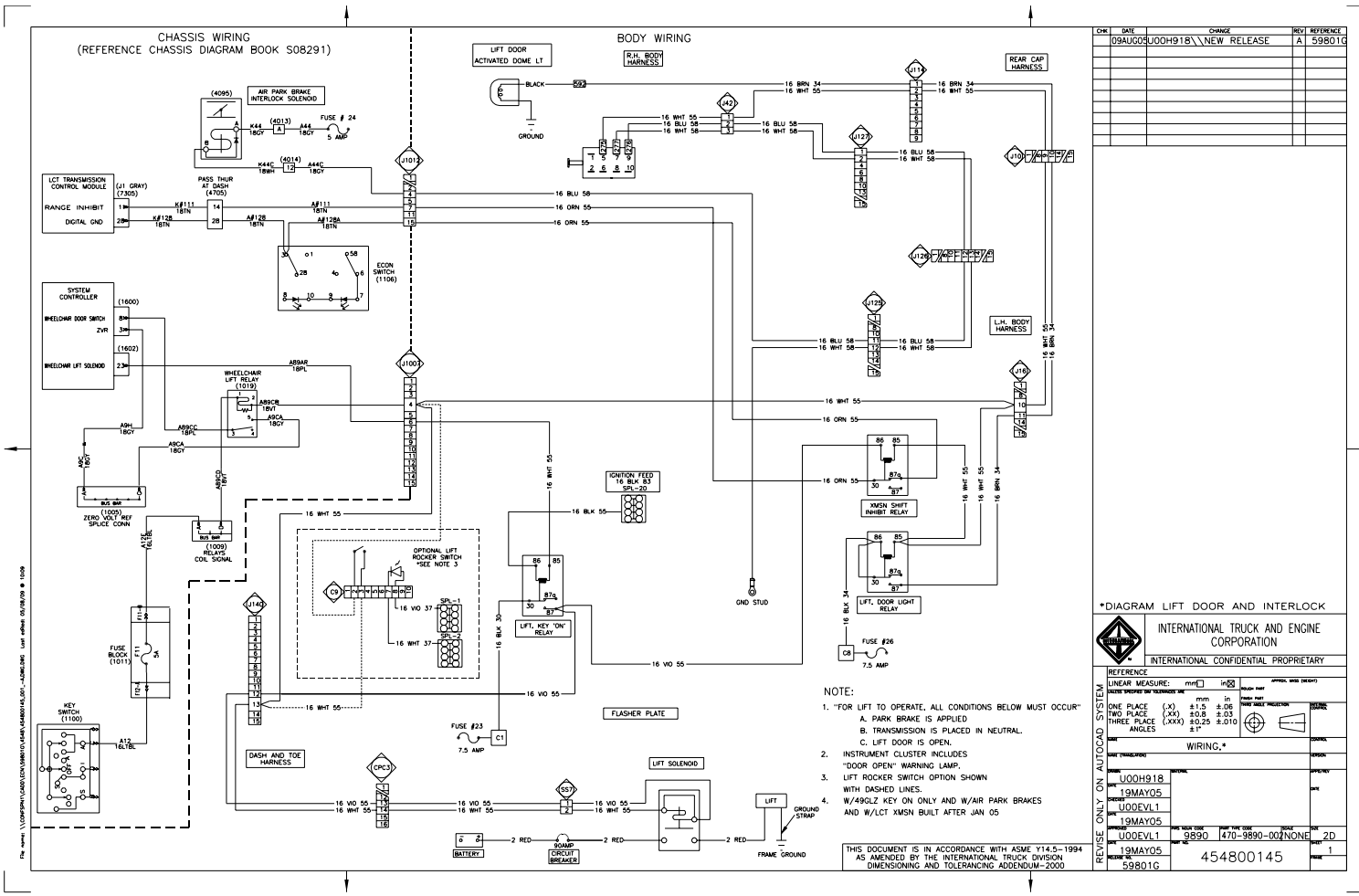

Figure 263 Lift Door / Interlock — Air Brakes, LCT Trans., 49GLZ

11.9. LIFT DOOR / INTERLOCK — AIR BRAKES, MD TRANS., 49GLZ

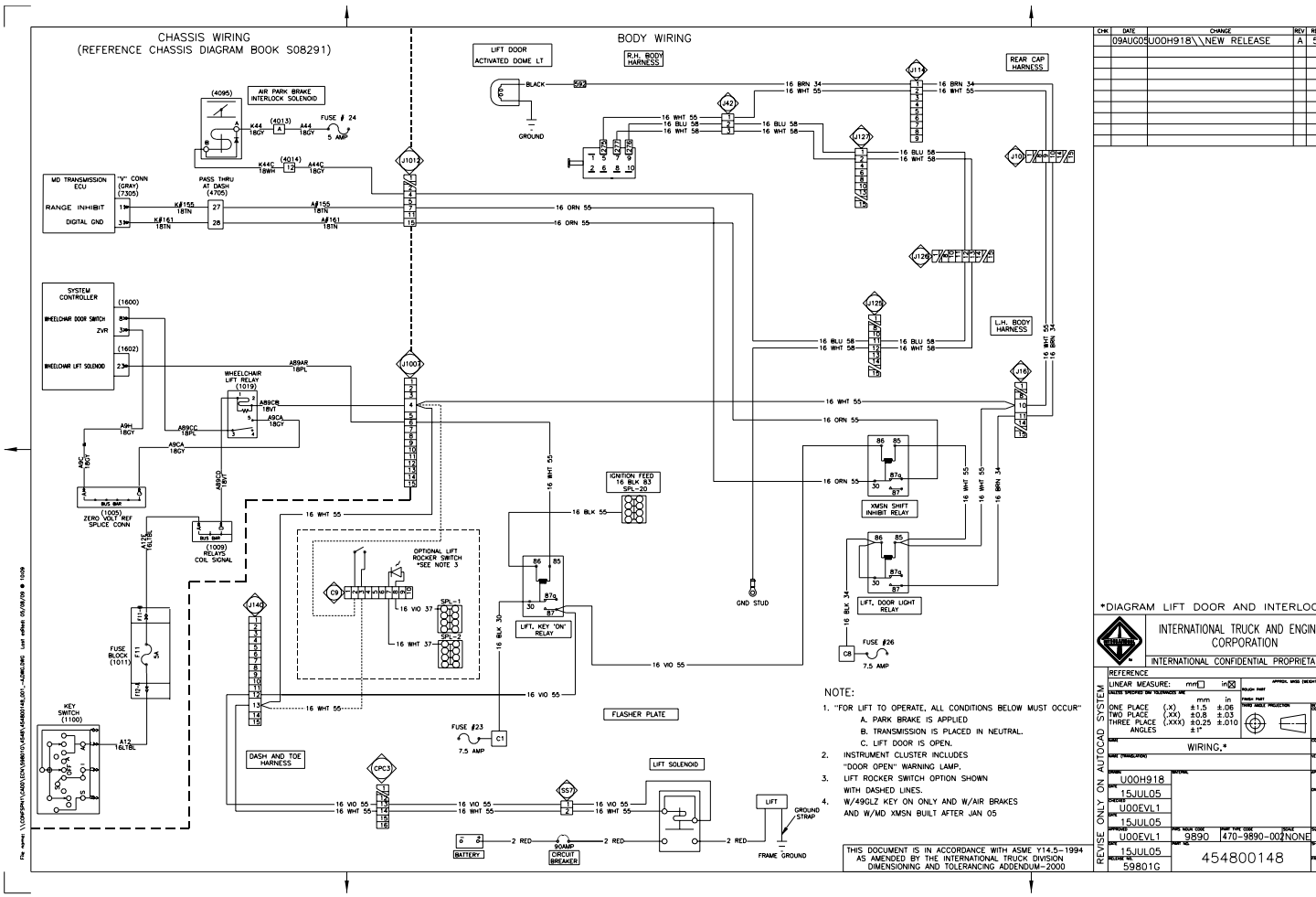

Figure 264 Lift Door / Interlock — Air Brakes, MD Trans., 49GLZ

11.10. LIFT DOOR / INTERLOCK — HYDRAULIC BRAKES, LCT TRANS., 49GLZ

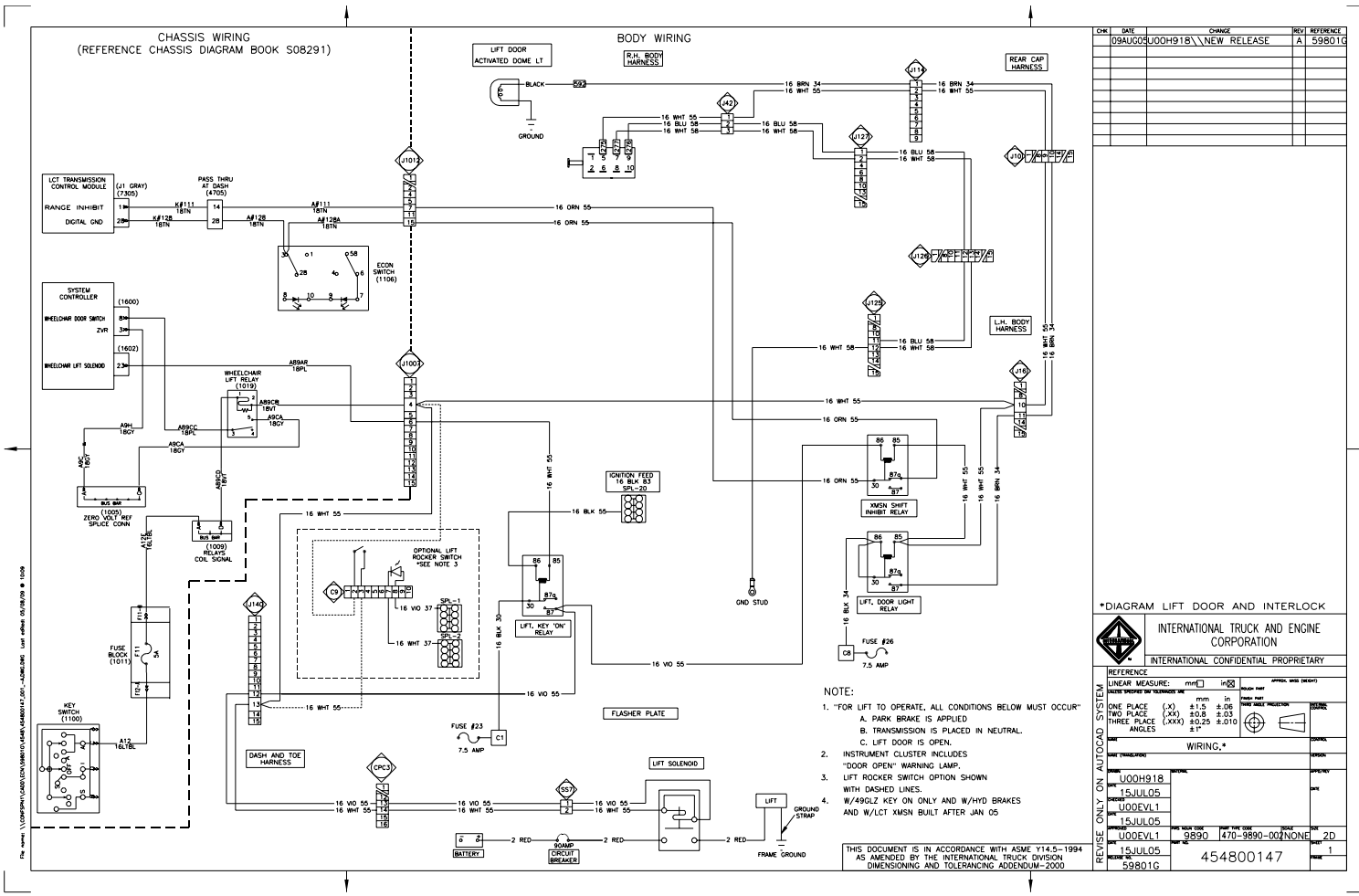

Figure 265 Lift Door / Interlock — Hydraulic Brakes, LCT Trans., 49GLZ

11.11. LIFT DOOR / INTERLOCK — HYDRAULIC BRAKES, MD TRANS., 49GLZ

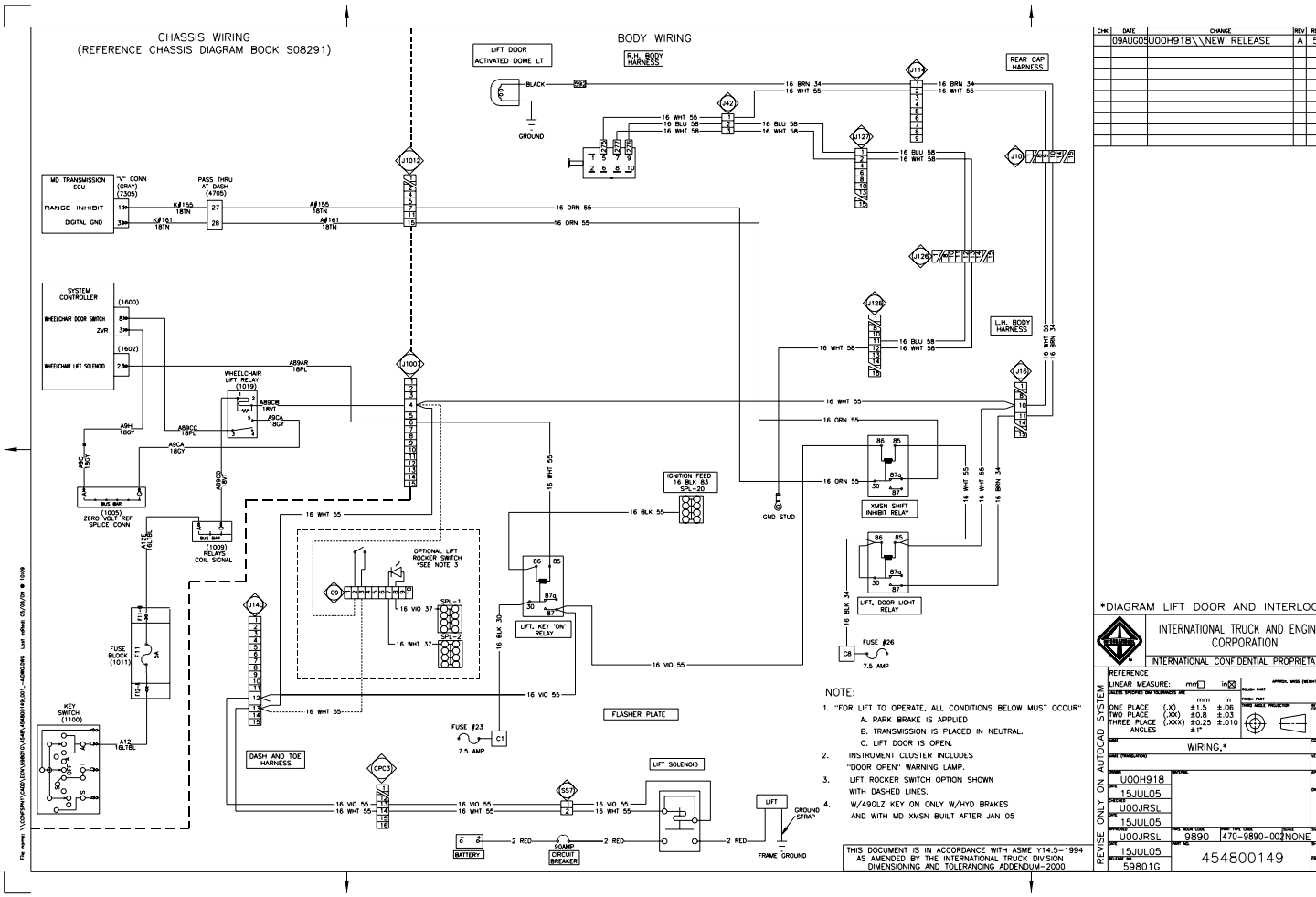

Figure 266 Lift Door / Interlock — Hydraulic Brakes, MD Trans., 49GLZ

11.12. LIFT DOOR / INTERLOCK — HYDRAULIC BRAKES, LCT TRANS., 49GMM

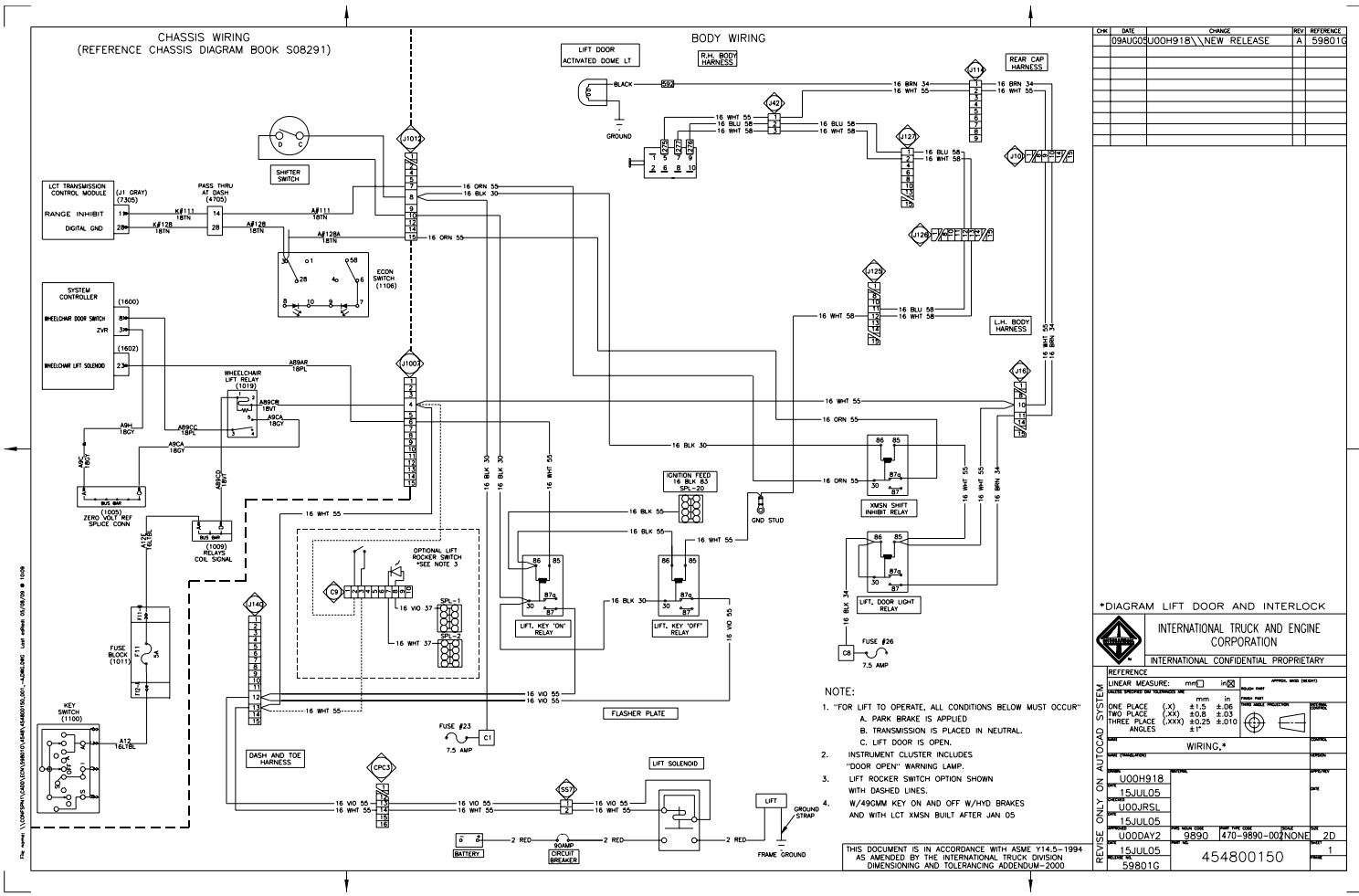

Figure 267 Lift Door / Interlock — Hydraulic Brakes, LCT Trans., 49GMM

12. MISCELLANEOUS (CHAPTER 12)

12.1. HEATED WIPER BLADES

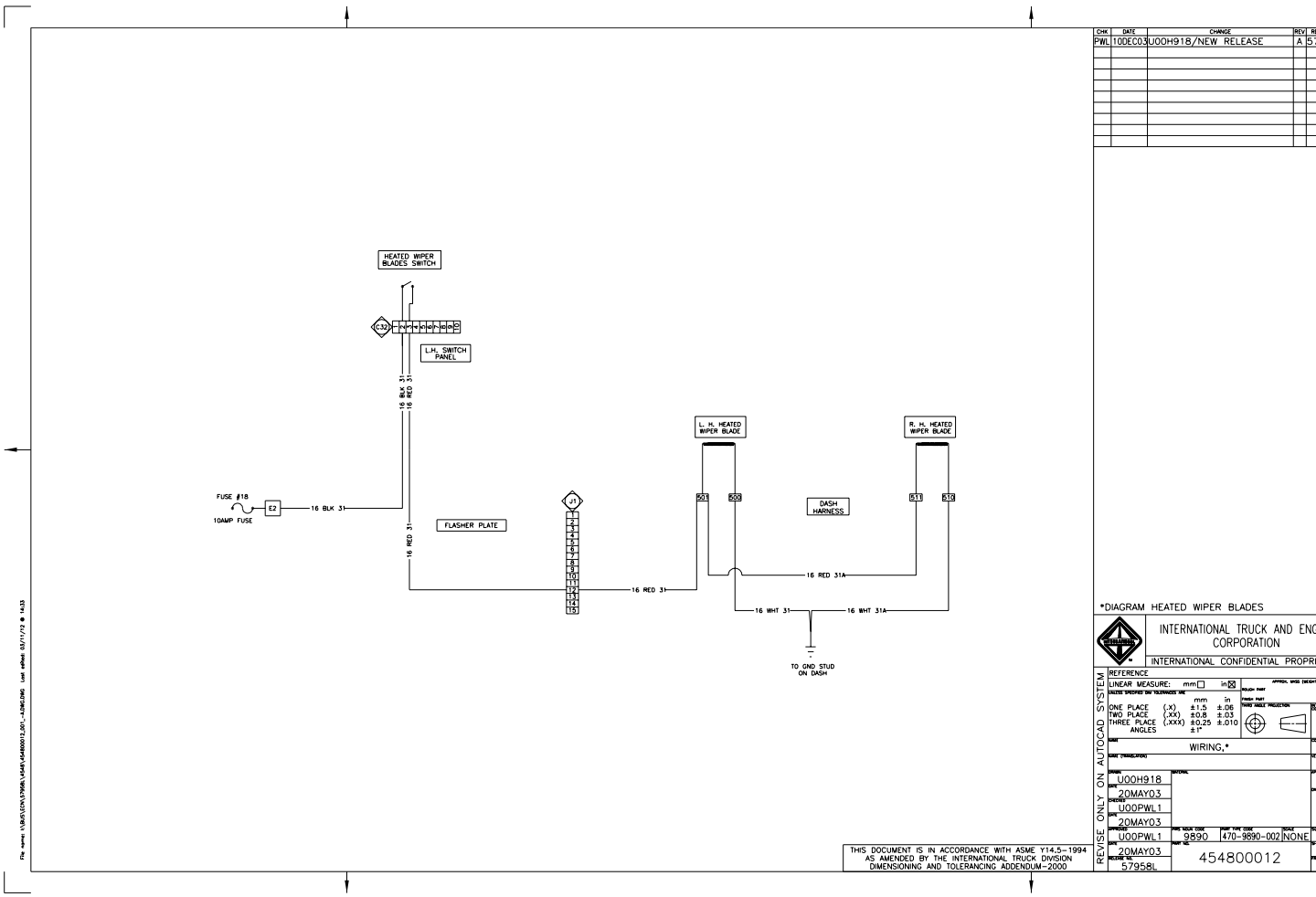

Figure 268 Heated Wiper Blades

12.2. AIR COMPRESSOR

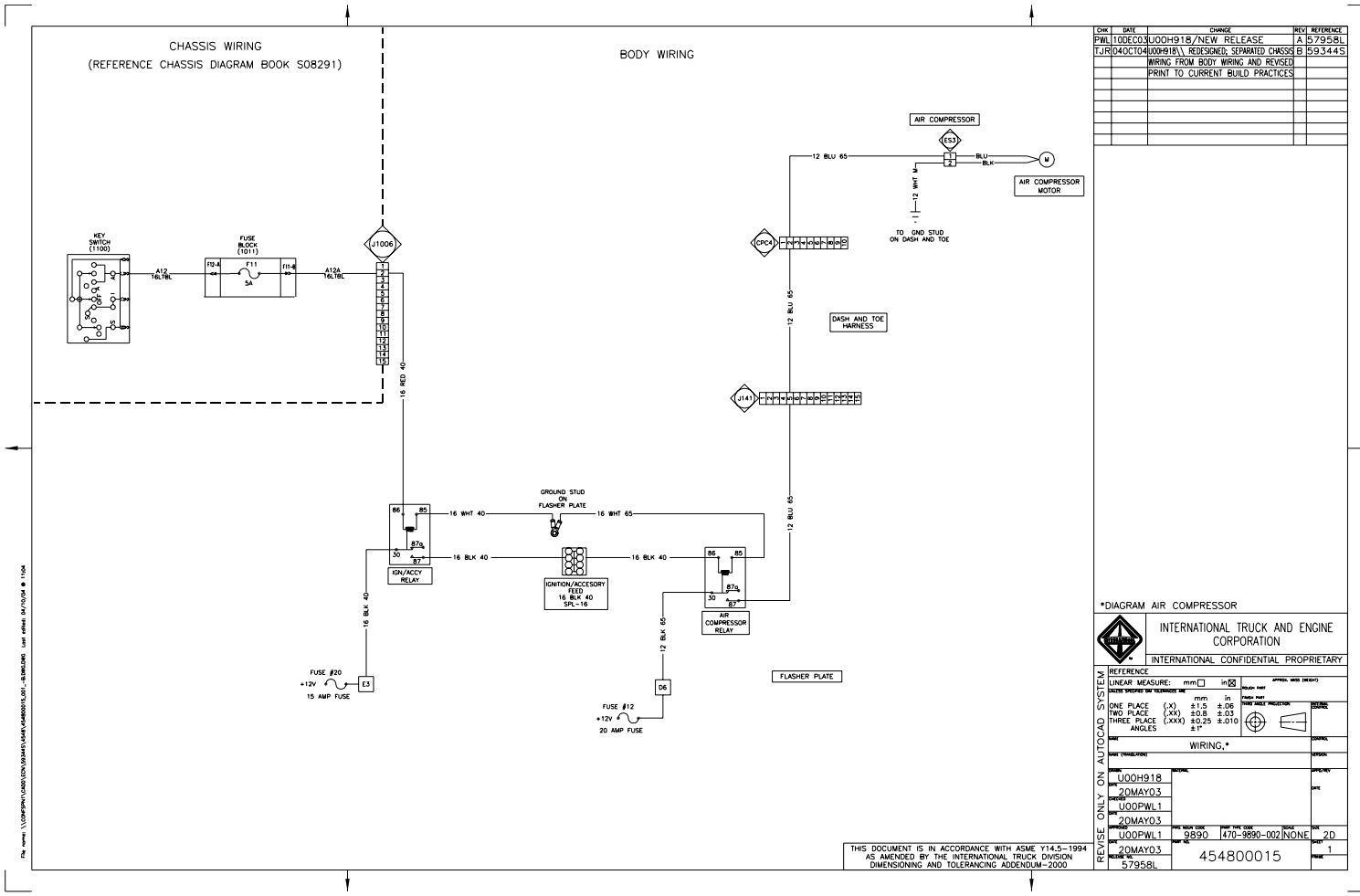

Figure 269 Air Compressor

12.3. AIR HORN

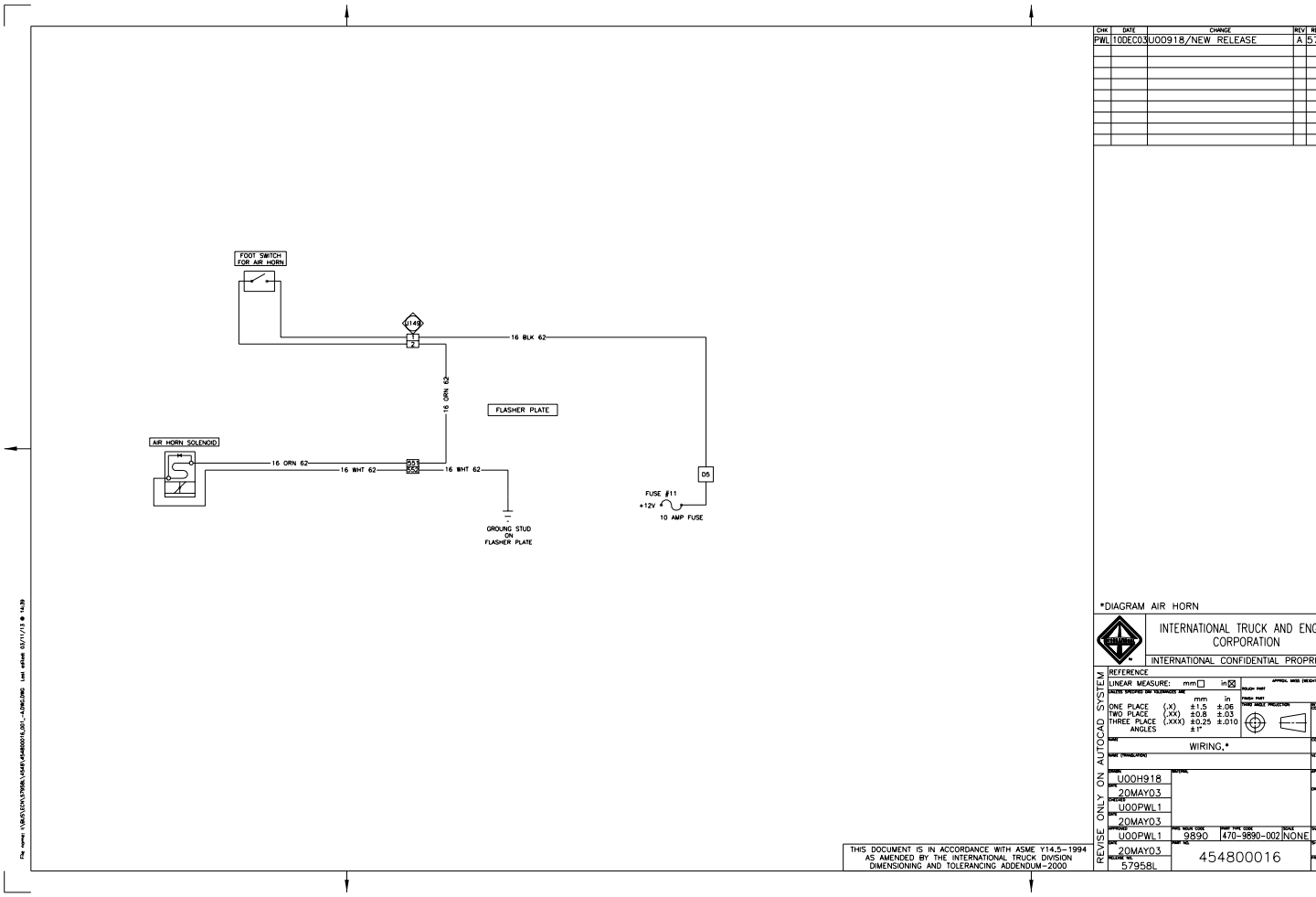

Figure 270 Air Horn

12.4. BOOSTER PUMP

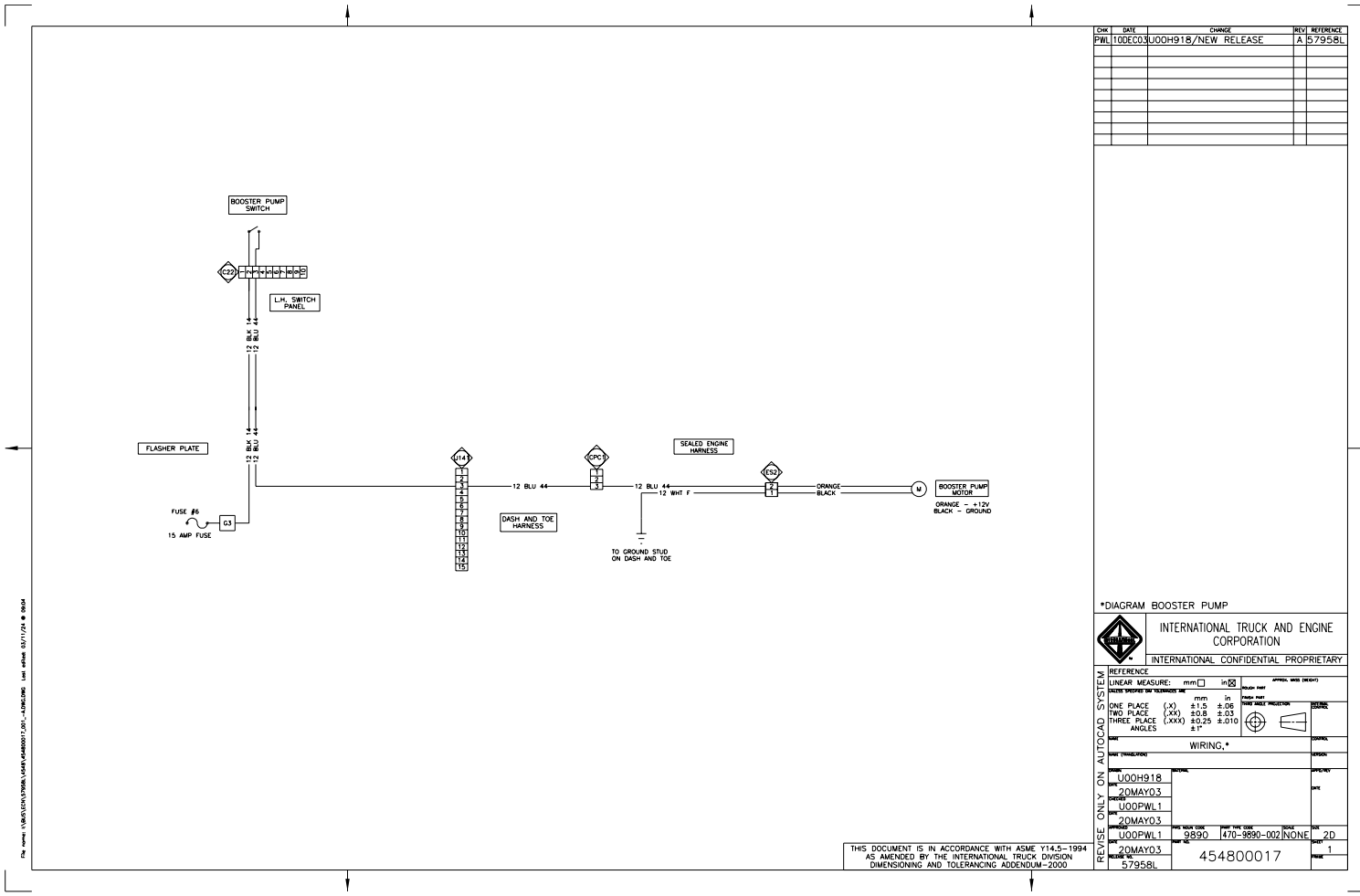

Figure 271 Booster Pump

12.5. DC POWER SOURCE

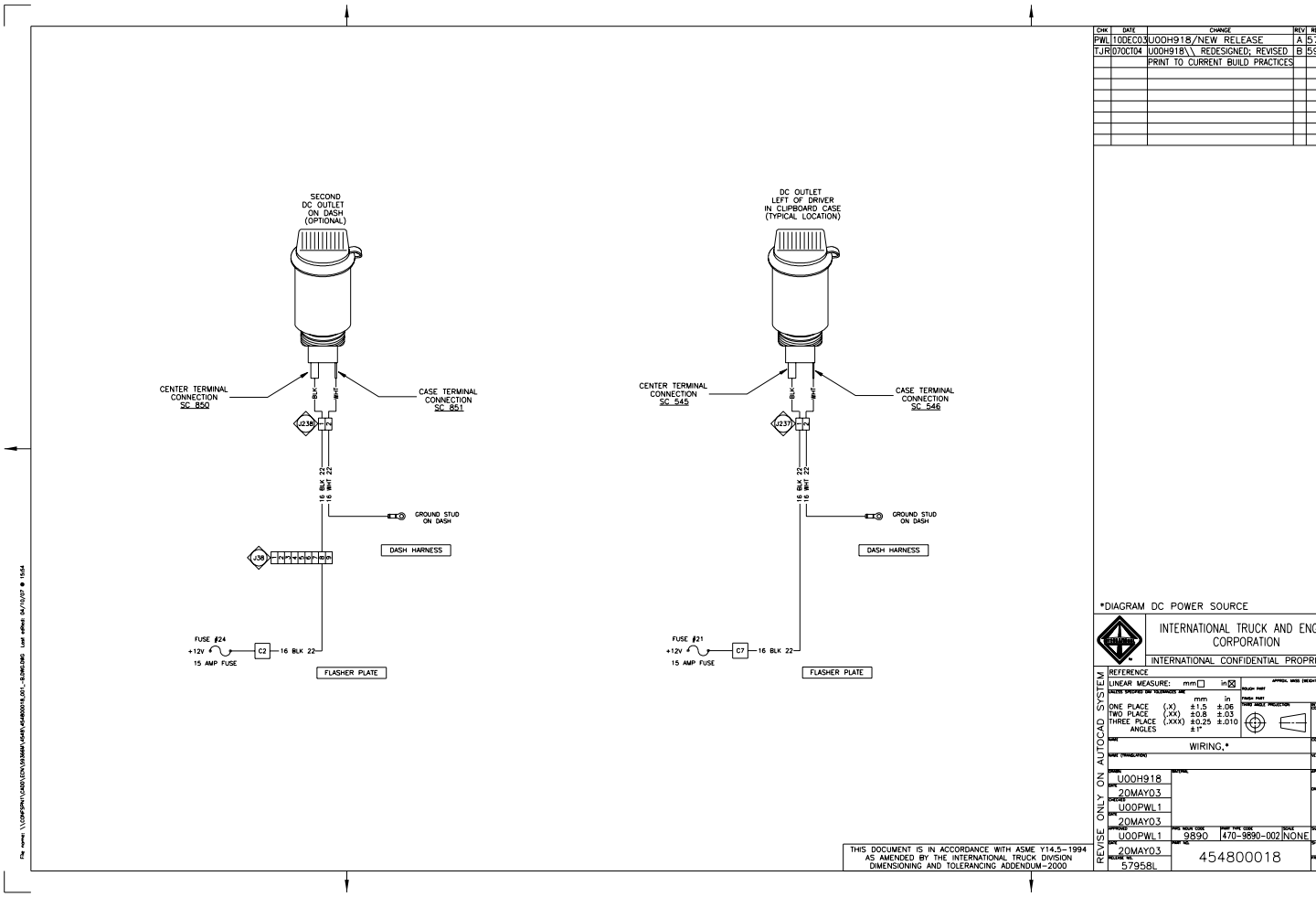

Figure 272 DC Power Source

12.6. STARTER INTERRUPT — EMERGENCY EXITS

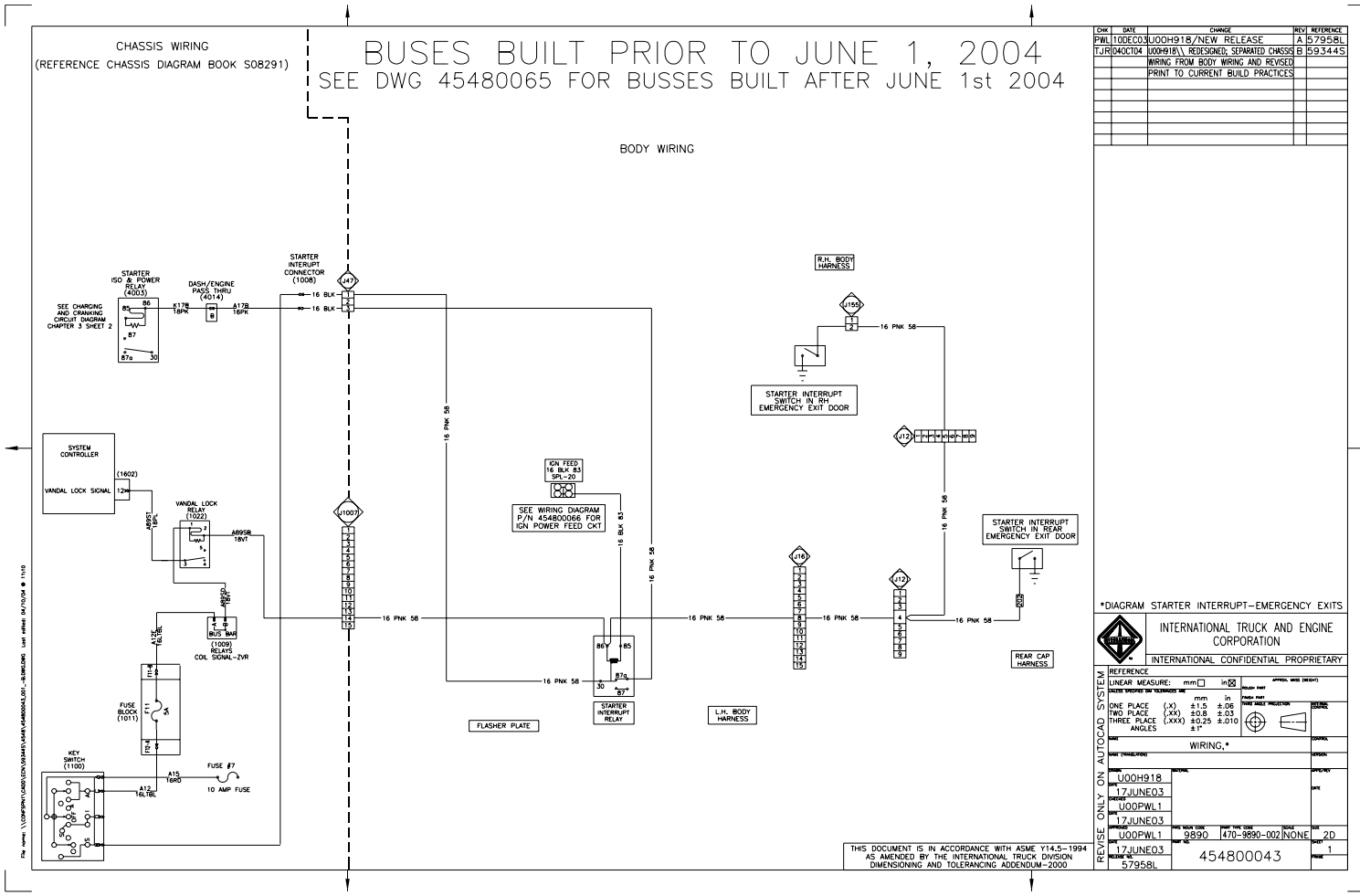

Figure 273 Starter Interrupt — Emergency Exits

12.7. POST TRIP INSPECTION

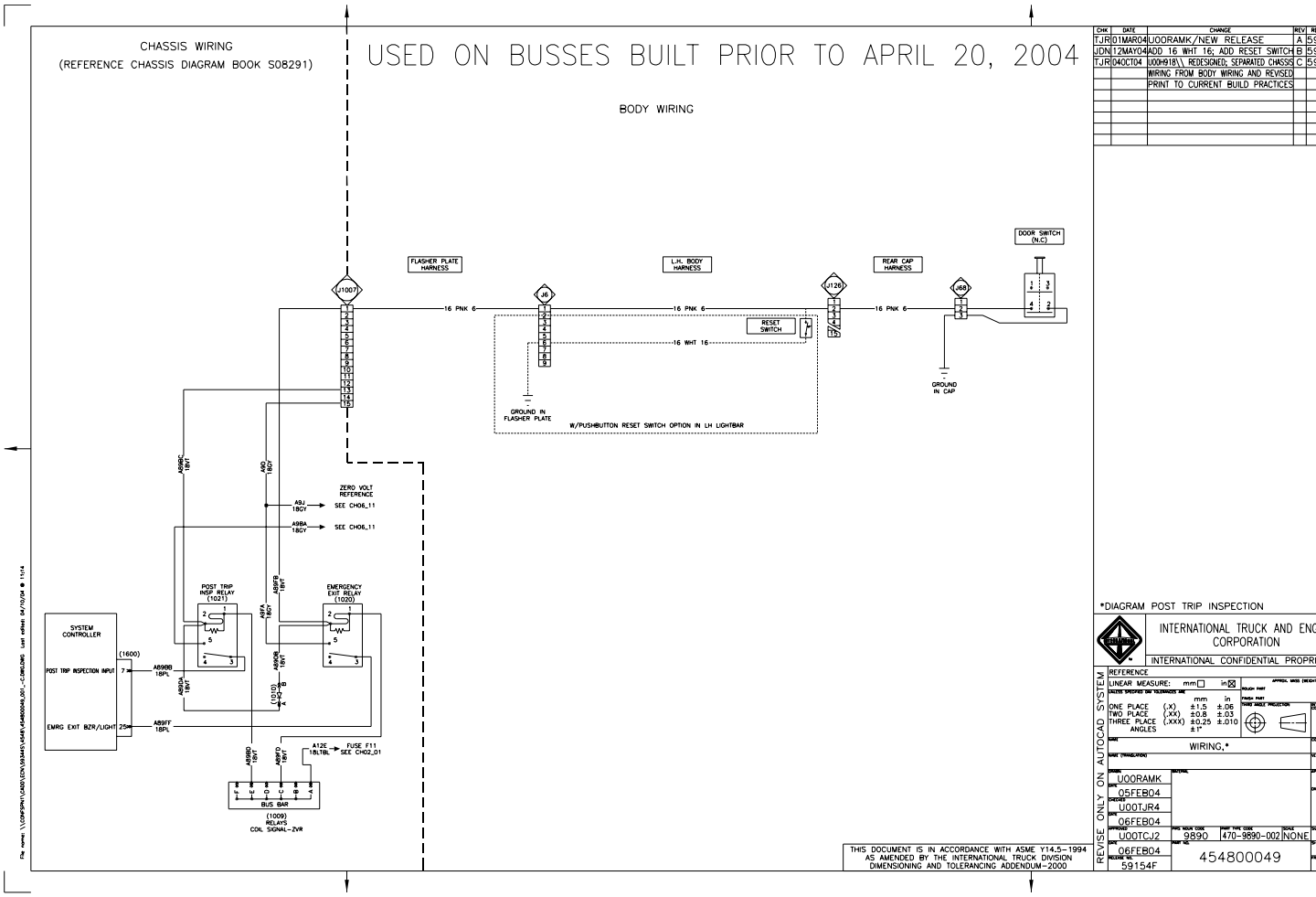

Figure 274 Post Trip Inspection

12.8. STARTER INTERRUPT — WIRED TO BUZZER

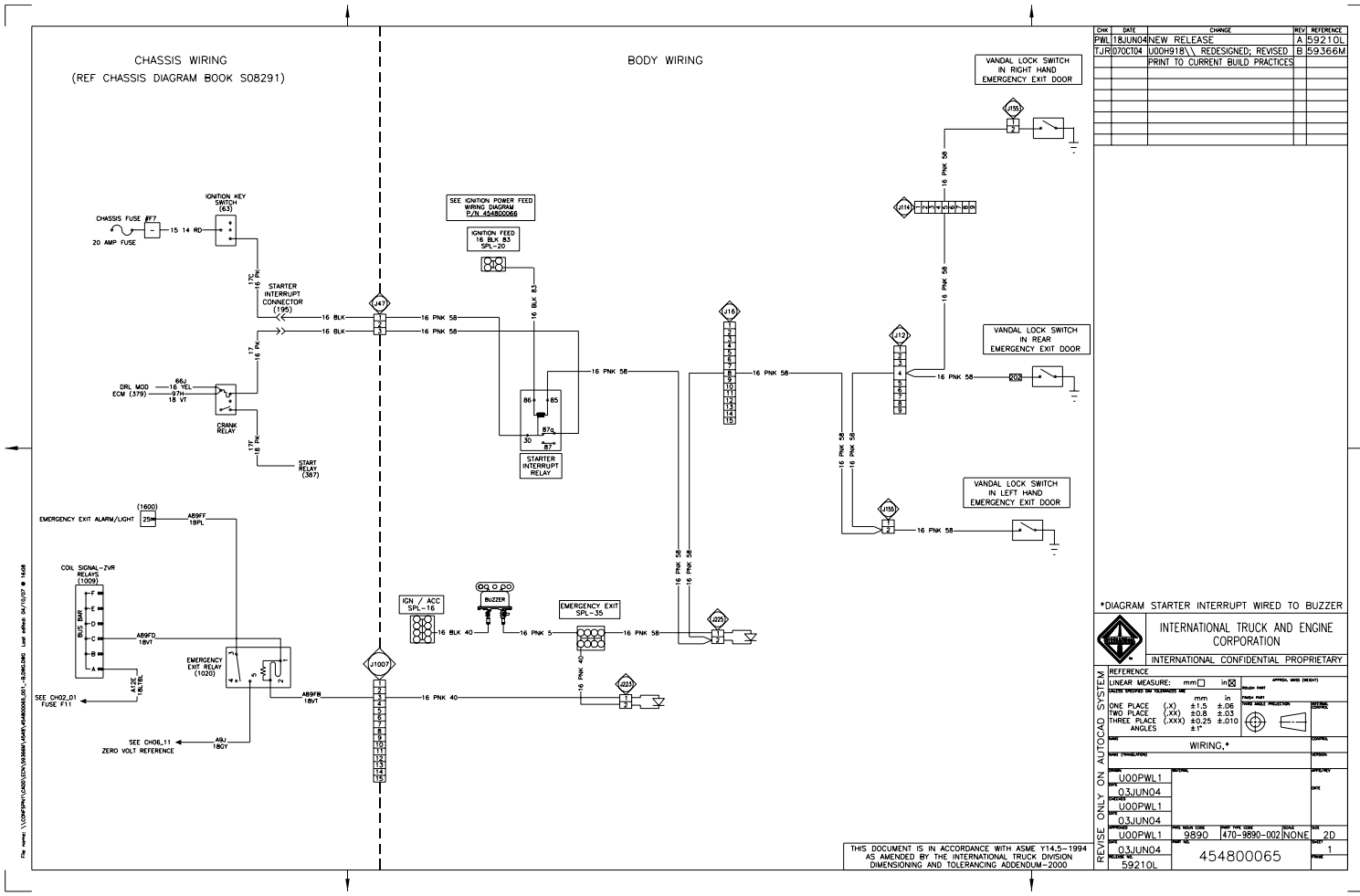

Figure 275 Starter Interrupt — Wired to Buzzer

12.9. CAMERA IGNITION ACTIVATED

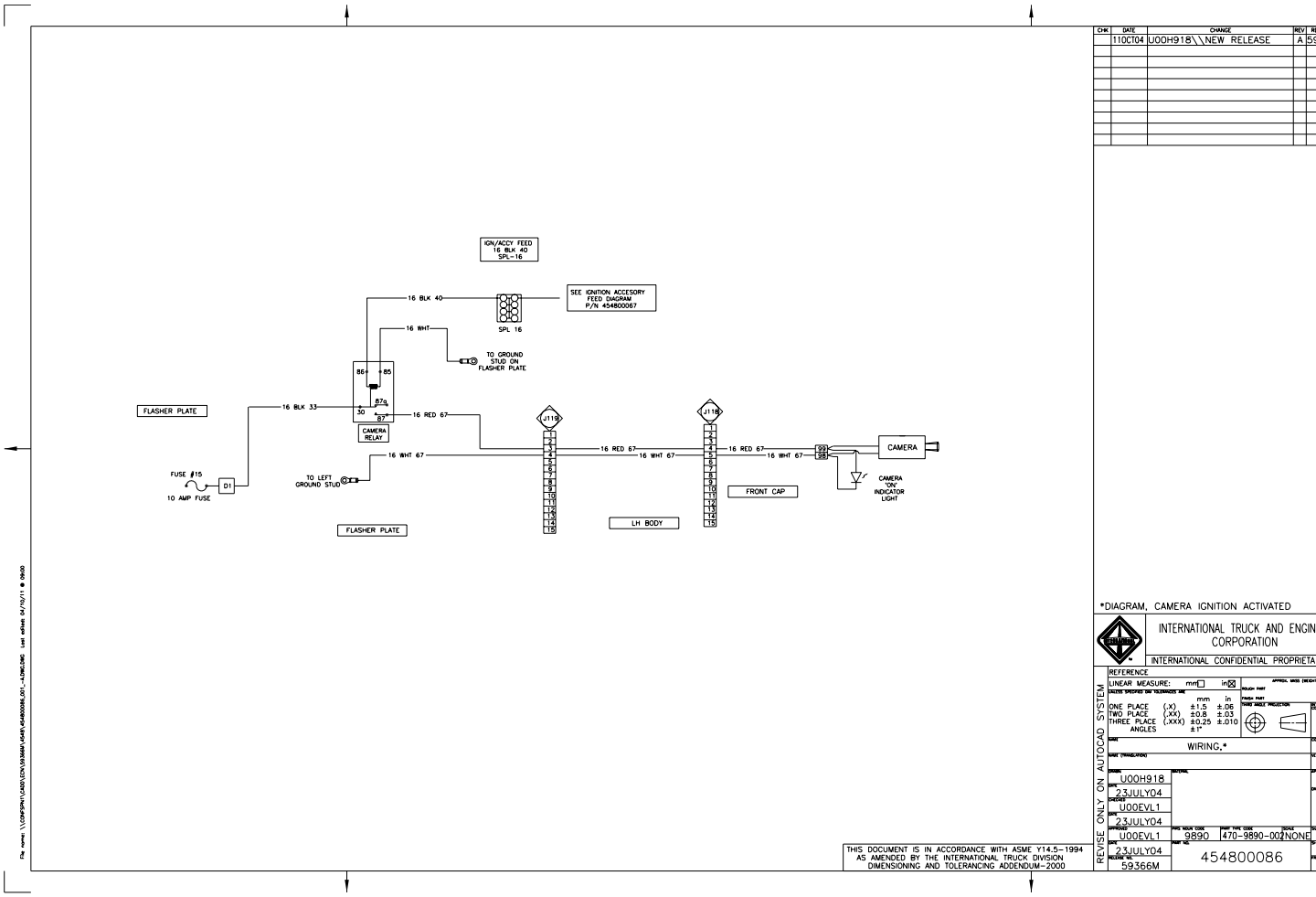

Figure 276 Camera Ignition Activated

12.10. CAMERA SWITCH ACTIVATED

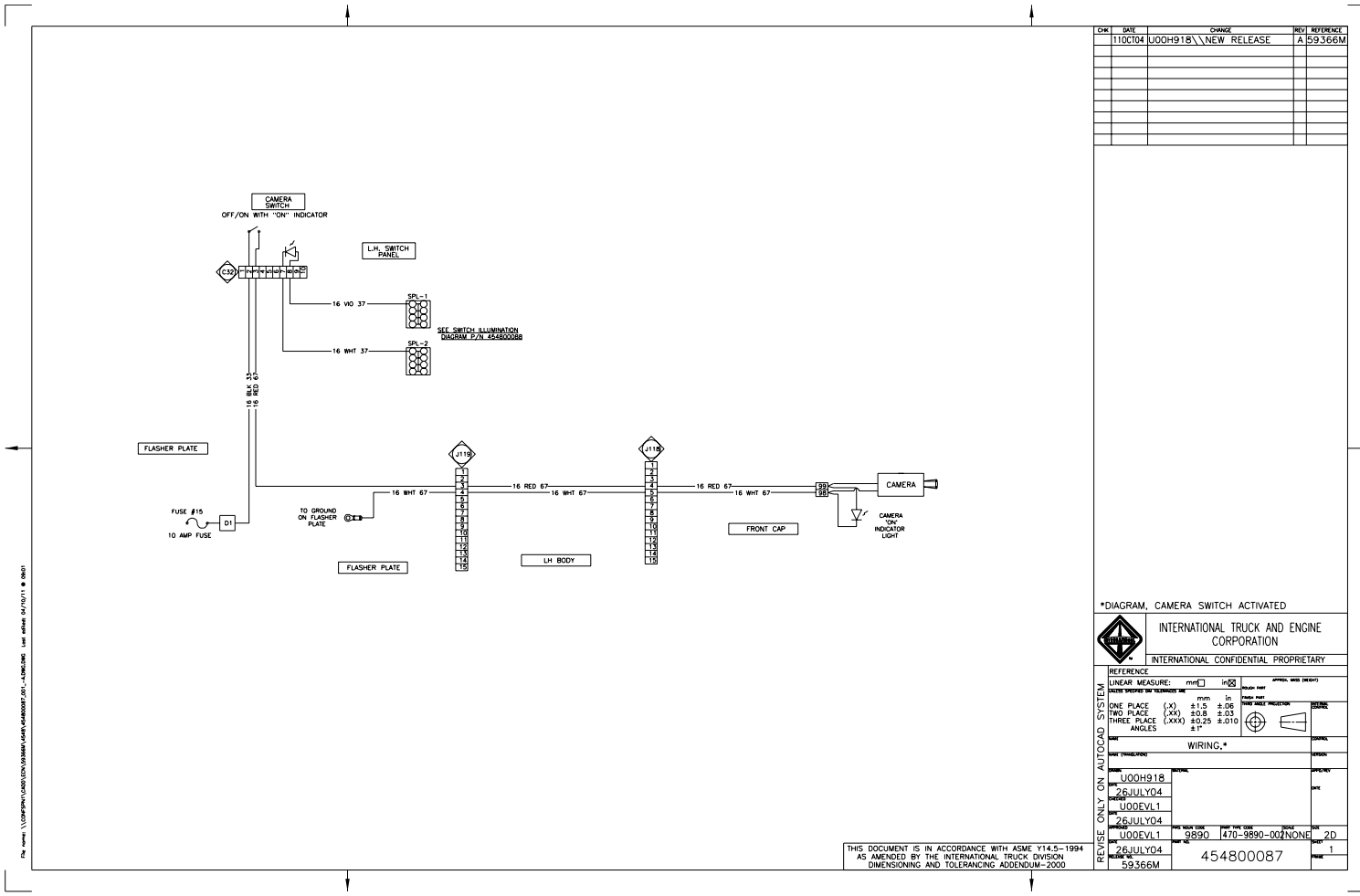

Figure 277 Camera Switch Activated

12.11. TRACTION SANDERS — 5 OR 10 GALLON

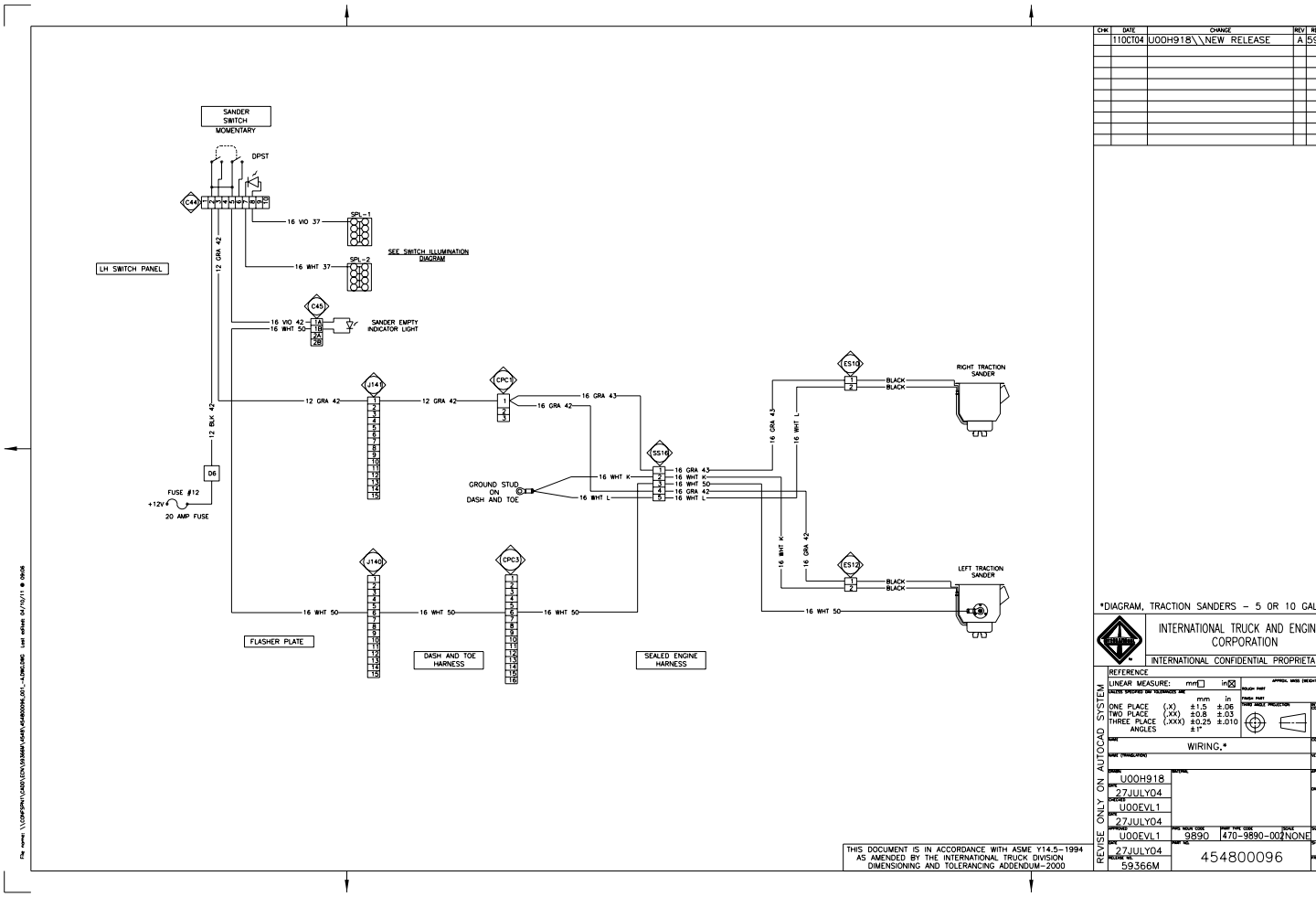

Figure 278 Traction Sanders — 5 or 10 Gallon

12.12. REVERSE MOTION SENSOR

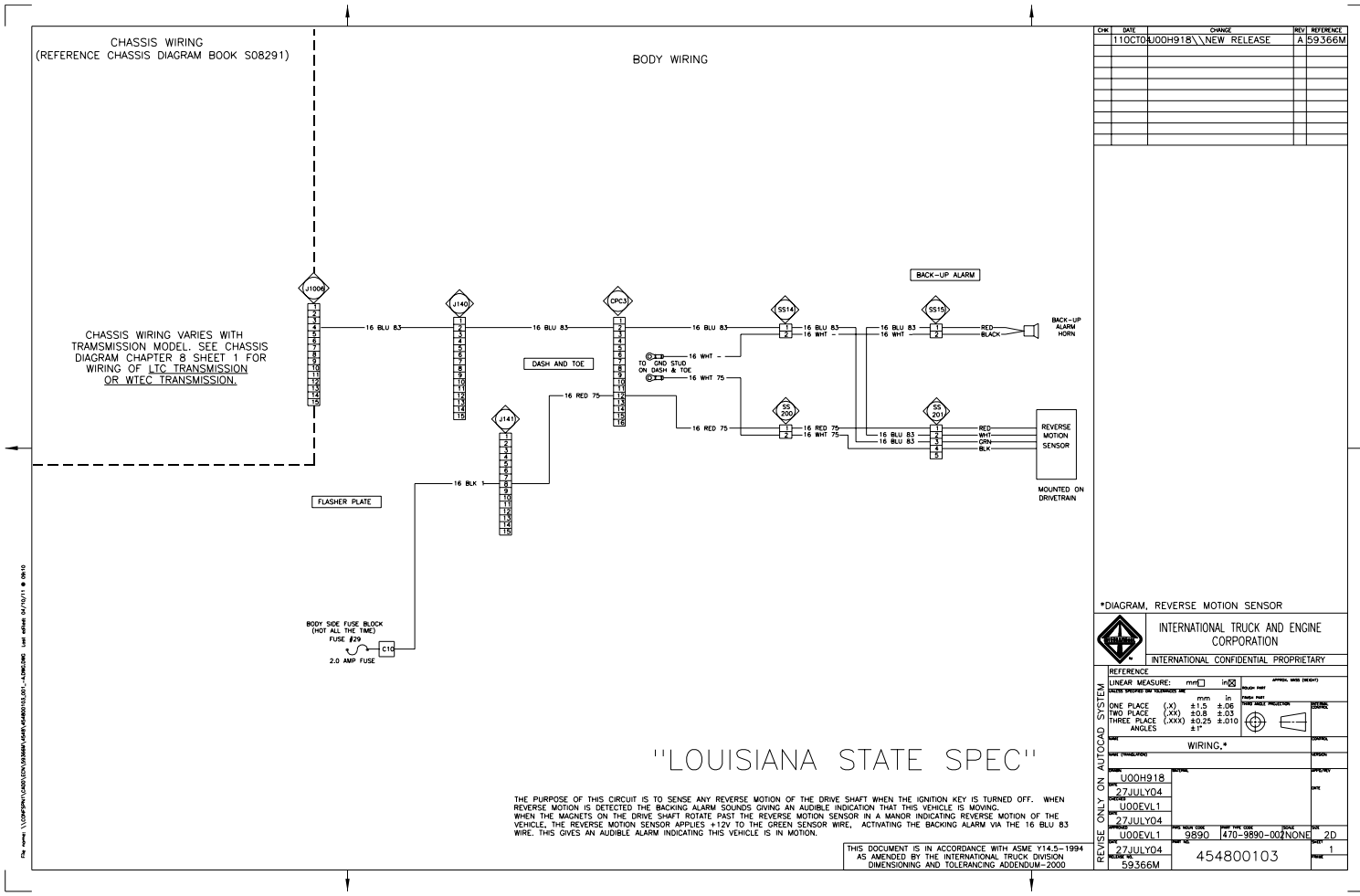

Figure 279 Reverse Motion Sensor

12.13. NO CHILD LEFT BEHIND

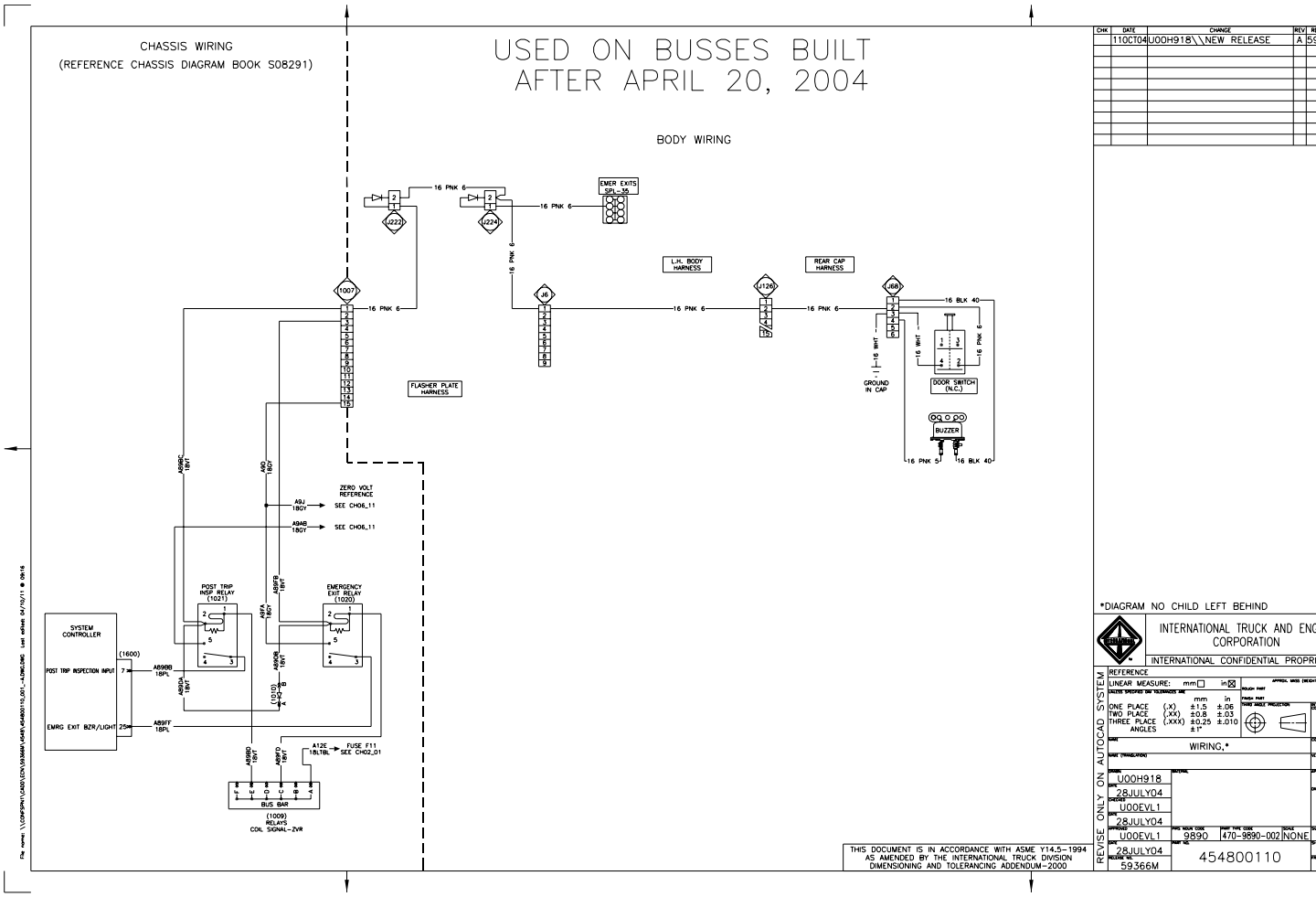

Figure 280 No Child Left Behind

12.14. NO CHILD LEFT BEHIND WITH SEPARATE DEACTIVATION SWITCH

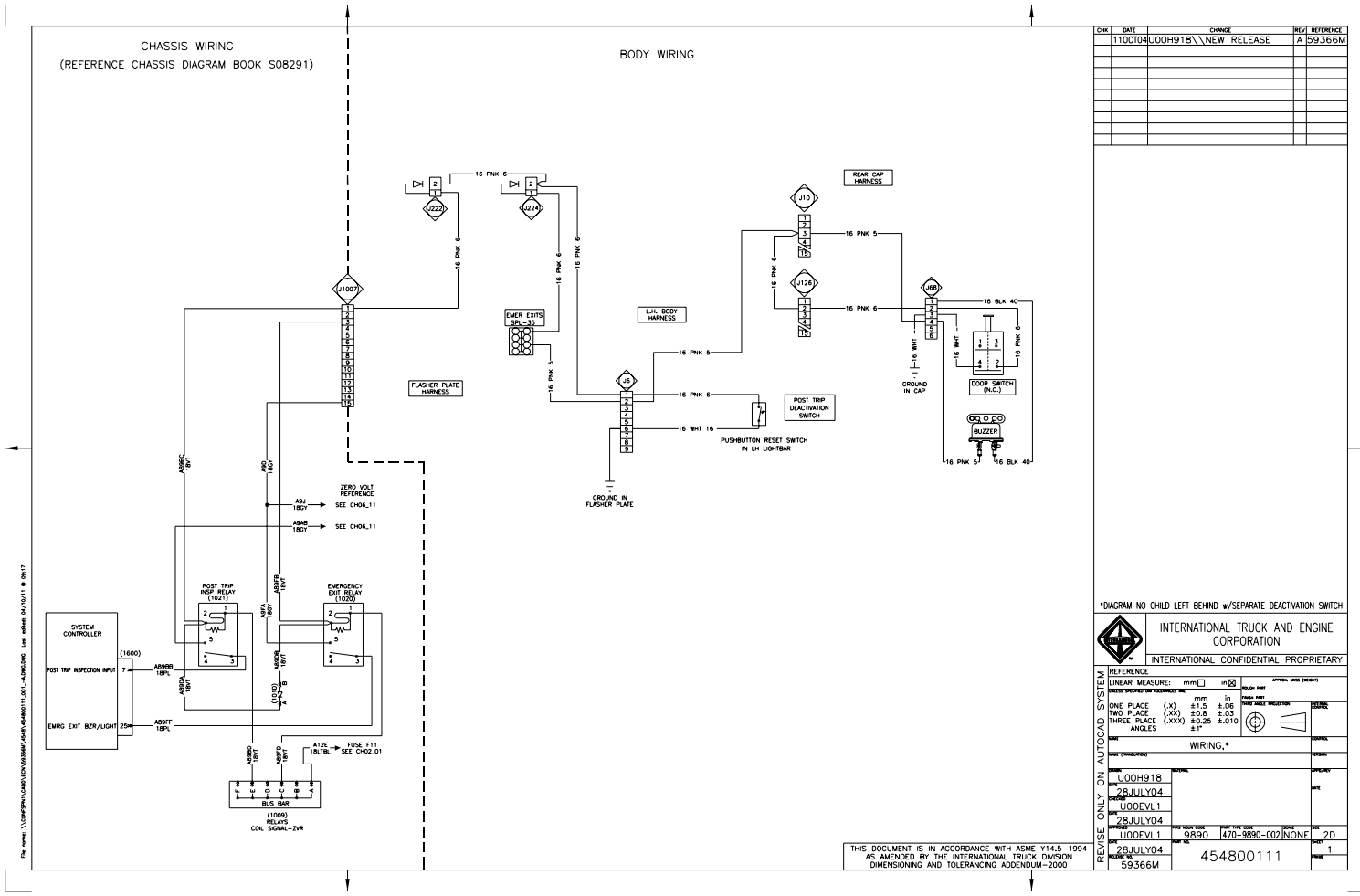

Figure 281 No Child Left Behind with Separate Deactivation Switch

12.15. LOCKING OVERHEAD COMPARTMENT WITH BUZZER

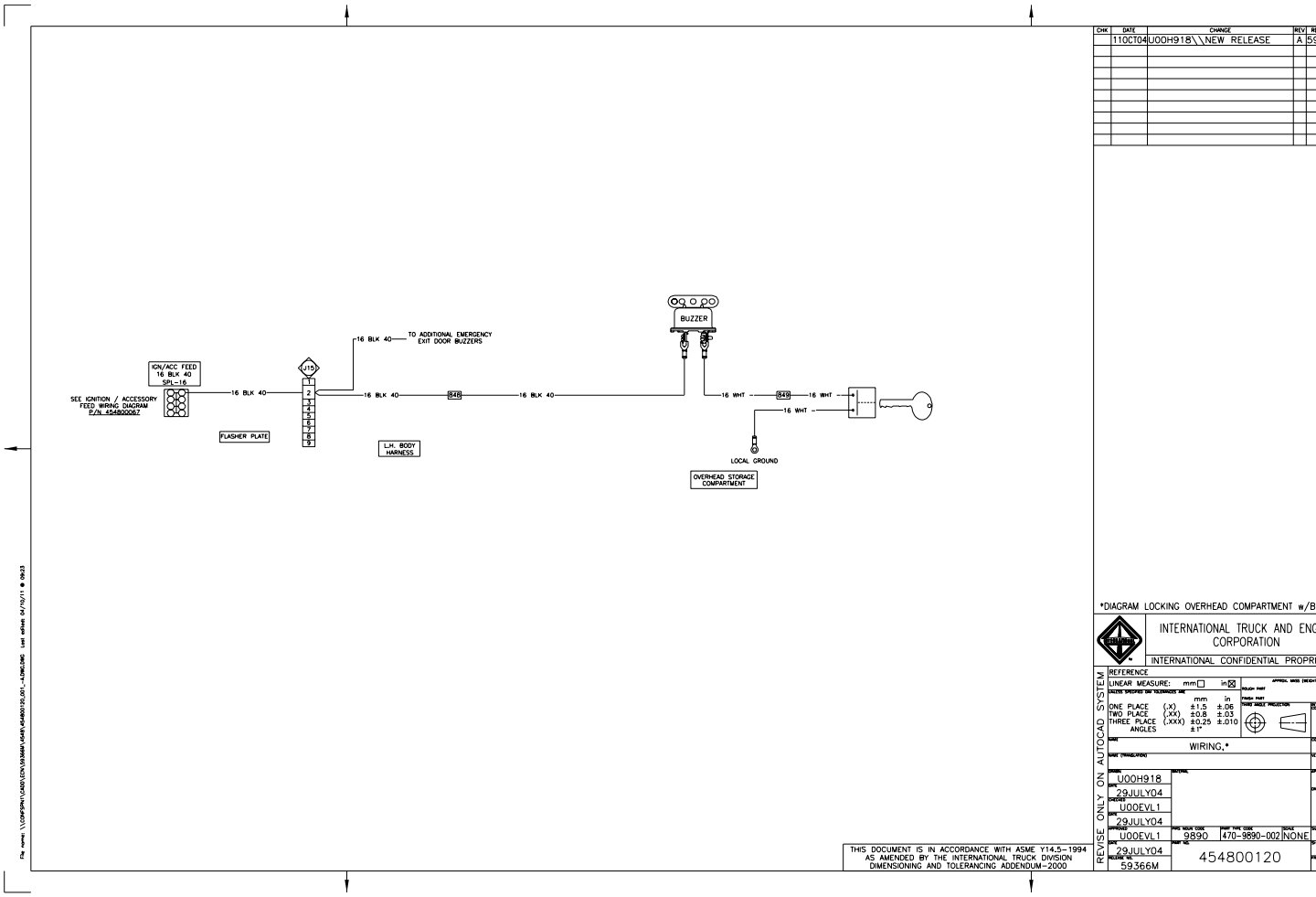

Figure 282 Locking Overhead Compartment with Buzzer

12.16. FUEL FIRED HEATER WITH 7–DAY TIMER

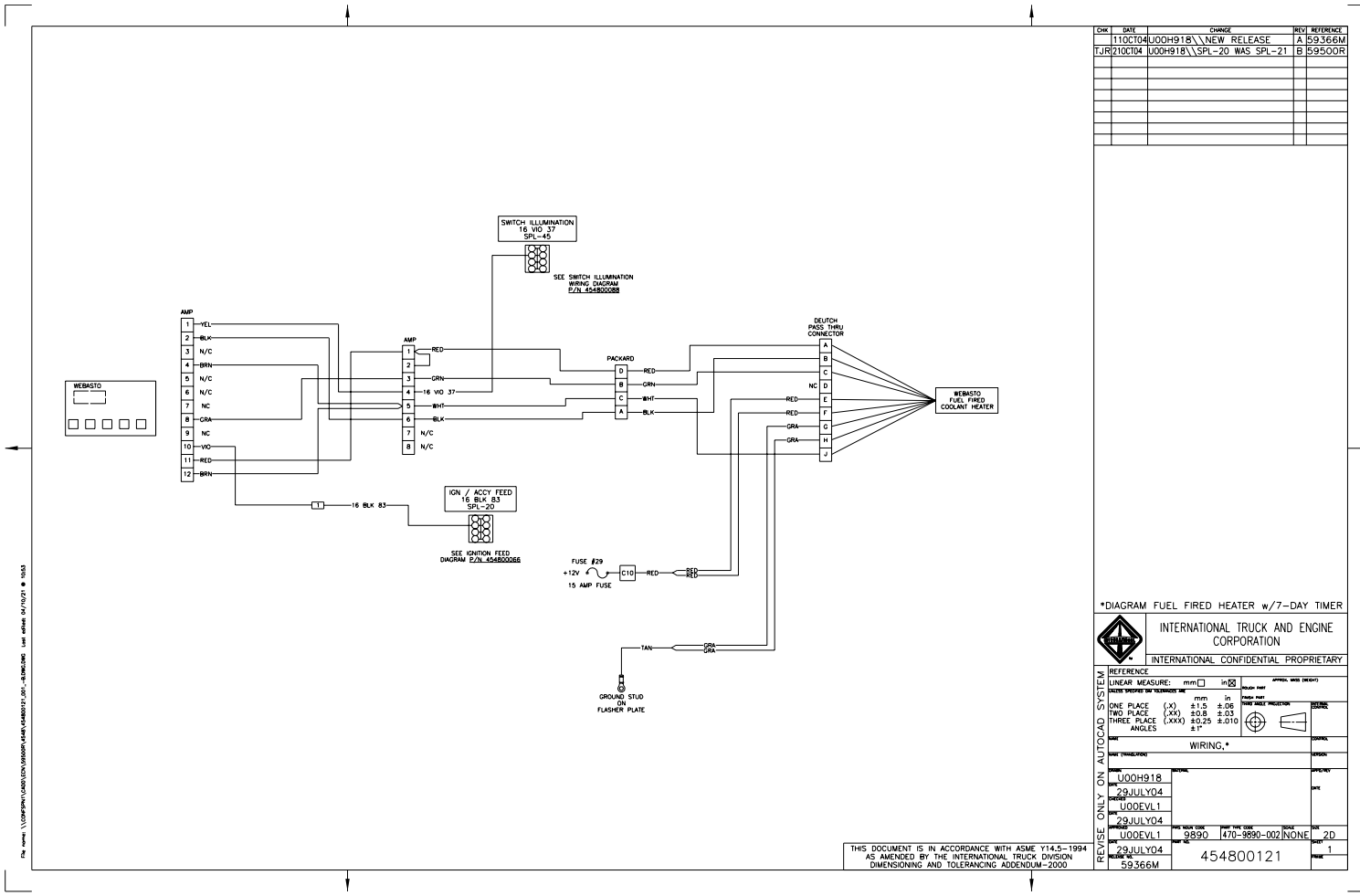

Figure 283 Fuel Fired Heater with 7–Day Timer