[3] TIMING GEAR AND CAMSHAFT

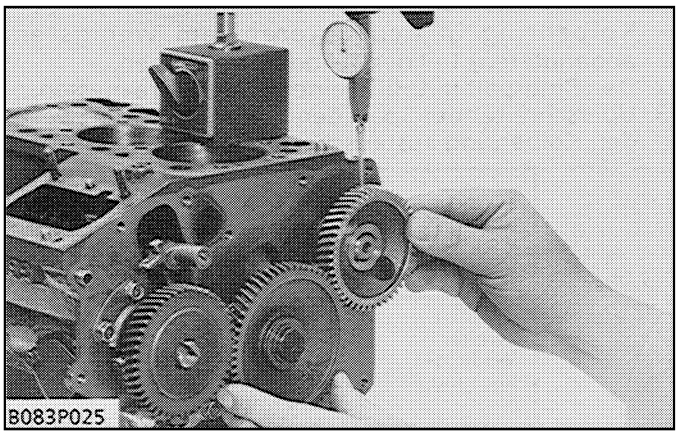

Timing Gear Backlash

1. Set a dial indicator (lever type) with its tip on the gear tooth.
2. Move the gear to measure the backlash, holding its mating gear.
3. If the backlash exceeds the allowable limit, check the oil clearance of the shaft and gear.
4. If the oil clearance is proper, replace the gears.

Backlash between idle gear and crank gear	Factory spec.	0.043 to 0.124 mm 0.00169 to 0.00488 in.
	Allowable limit	0.15 mm 0.0059 in.
Backlash between idle gear and cam gear	Factory spec.	0.047 to 0.123 mm 0.00185 to 0.00484 in.
	Allowable limit	0.15 mm 0.0059 in.
Backlash between idle gear and injection pump gear	Factory spec.	0.046 to 0.124 mm 0.00181 to 0.00488 in.
	Allowable limit	0.15 mm 0.0059 in.
Backlash between oil pump gear and crank gear	Factory spec.	0.041 to 0.123 mm 0.00161 to 0.00484 in.
	Allowable limit	0.15 mm 0.0059 in.

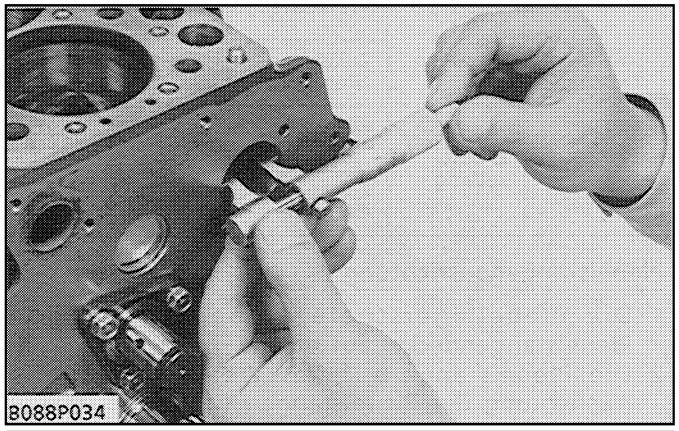

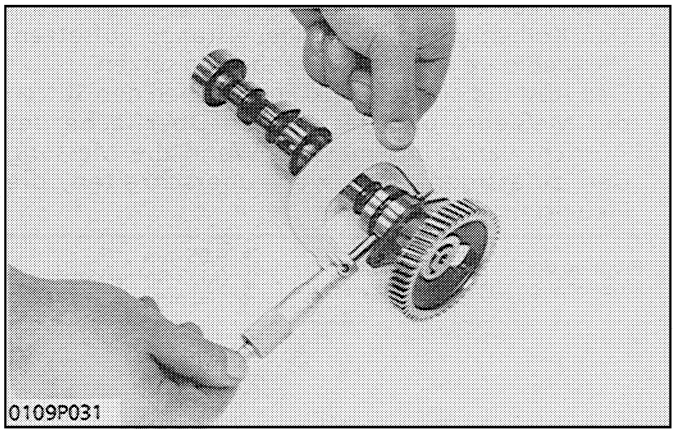

Oil Clearance of Camshaft Journal

1. Measure the camshaft journal O.D. with an outside micrometer.
2. Measure the cylinder block bore I.D. for camshaft with an inside micrometer, and calculate the oil clearance.
3. If the oil clearance exceeds the allowable limit, replace the camshaft.

Oil clearance of camshaft journal	Factory spec.	0.050 to 0.091 mm 0.0020 to 0.0036 in.
	Allowable limit	0.15 mm 0.0059 in.

Camshaft journal O.D.	Factory spec.	32.934 to 32.950 mm 1.2966 to 1.2972 in.
Cylinder block bore I.D. (Bearing portion)	Factory spec.	33.000 to 33.025 mm 1.2992 to 1.3002 in.

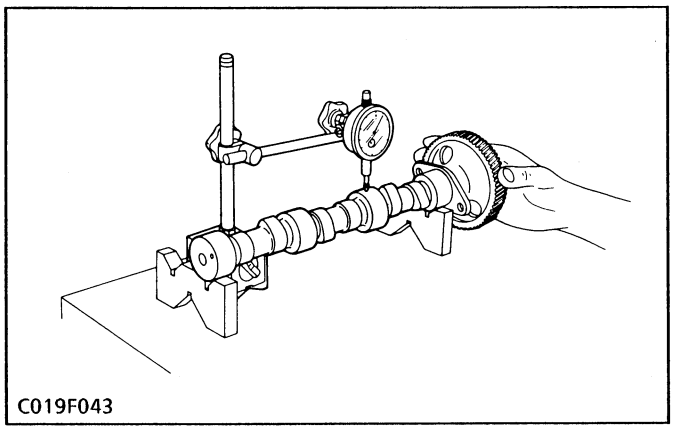
C019F043

Camshaft Alignment

1. Support the camshaft with V-blocks on the surface plate and set a dial indicator with its tip on the intermediate journal at right angle.
2. Rotate the camshaft on the V-blocks and get the misalignment (half of the measurement).
3. If the misalignment exceeds the allowable limit, replace the camshaft.

Misalignment	Allowable limit	0.01 mm 0.0004 in.

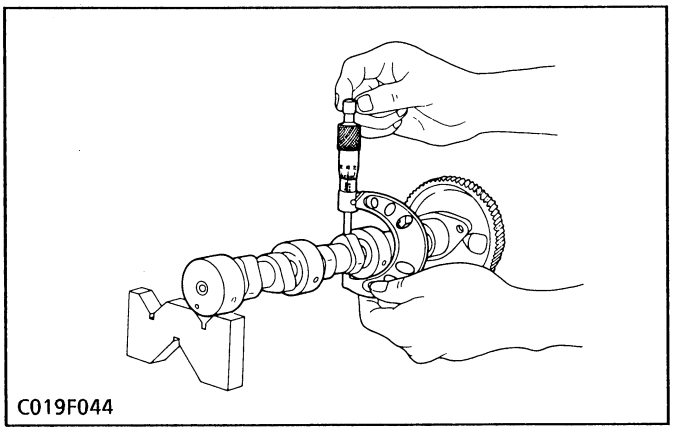
C019F044

Intake and Exhaust Cam Heights

1. Measure the height of the cam at its highest point with an outside micrometer.
2. If the measurement is less than the allowable limit, replace the camshaft.

Intake and exhaust cam heights	Factory spec.	26.88 mm 1.0583 in.
	Allowable limit	26.83 mm 1.0563 in.

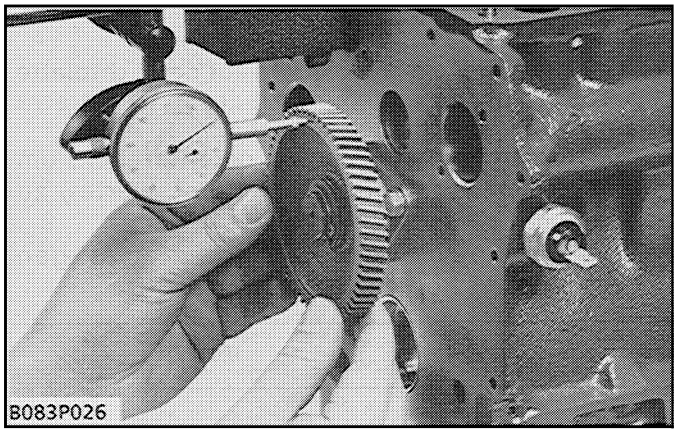
B083P026

Idle Gear Side Clearance

1. Set a dial indicator with its tip on the idle gear.
2. Measure the side clearance by moving the idle gear to the front and rear.
3. If the measurement exceeds the allowable limit, replace the idle gear or idle gear shaft.

Idle gear side clearance	Factory spec.	0.20 to 0.51 mm 0.0079 to 0.0201 in.
	Allowable limit	0.60 mm 0.0236 in.

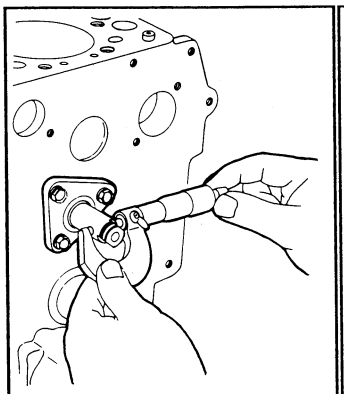
0109F073

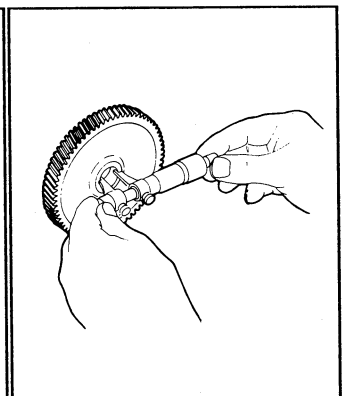
0109F100

Oil Clearance between Idle Gear Shaft and Idle Gear Bushing

1. Measure the I.D. of the idle gear bushing with an inside micrometer.
2. Measure the O.D. of the idle gear shaft with an outside micrometer, and calculate the oil clearance.
3. If the clearance exceeds the allowable limit, replace the bushing. If it still exceeds the allowable limit, replace the idle gear shaft.

Oil clearance between idle gear shaft and idle gear bushing	Factory spec.	0.020 to 0.084 mm 0.00079 to 0.00331 in.
	Allowable limit	0.10 mm 0.0039 in.

Idle gear shaft O.D.	Factory spec.	19.967 to 19.980 mm 0.78610 to 0.78661 in.
Idle gear bushing I.D.	Factory spec.	20.000 to 20.051 mm 0.78740 to 0.78941 in.

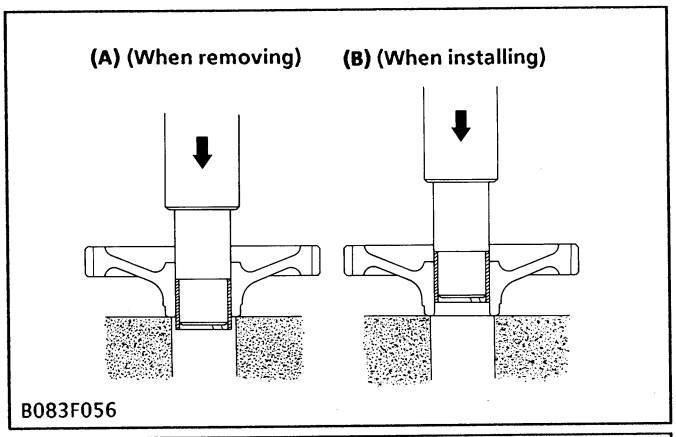

B083F056

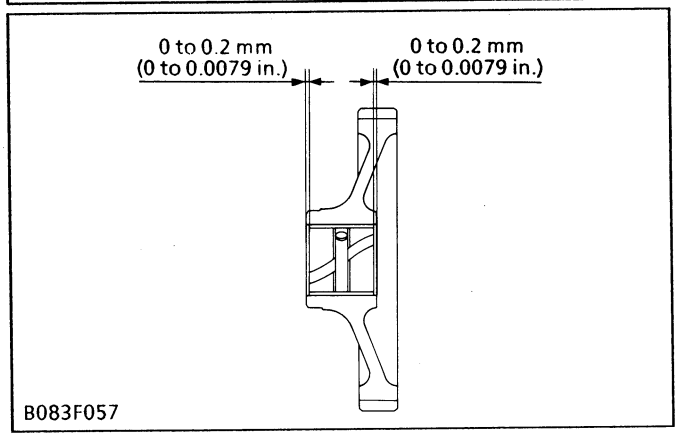

B083F057

Replacing Idle Gear Bushing

(A) (When removing)

1. Using an idle gear bushing replacing tool (see page S-23), press out the used bushing.

(B) (When installing)

1. Clean a new idle gear bushing and idle gear bore, and apply engine oil to them.
2. Using an idle gear bushing replacing tool, press in a new bushing (service parts) to the specified dimension. (See figure)

[4] CRANKSHAFT

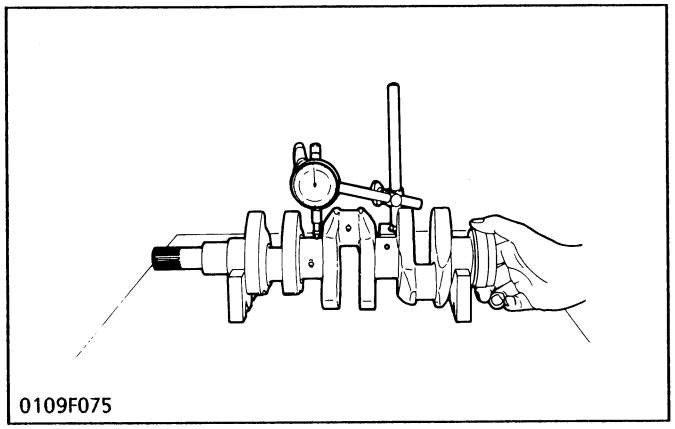
0109F075

Crankshaft Alignment

1. Support the crankshaft with V-blocks on the surface plate and set a dial indicator with its tip on the intermediate journal at right angle.
2. Rotate the crankshaft on the V-blocks and get the misalignment (half of the measurement).
3. If the misalignment exceeds the allowable limit, replace the crankshaft.

Misalignment	Allowable limit	0.02 mm 0.0008 in.

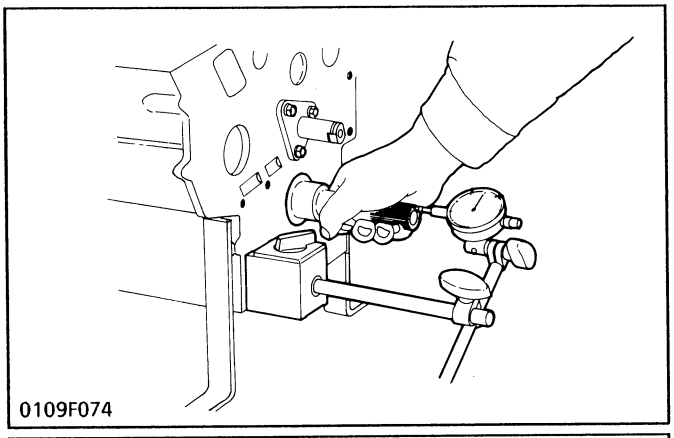
0109F074

Crankshaft Side Clearance

1. Set a dial indicator with its tip on the end of the crankshaft.
2. Measure the side clearance by moving the crankshaft to the front and rear.
3. If the measurement exceeds the allowable limit, replace the thrust bearings.
4. If the same size bearing is useless because of the crankshaft journal wear, replace it with an oversize one referring to the table and figure.

Crankshaft side clearance	Factory spec.	0.15 to 0.31 mm 0.0059 to 0.0122 in.
	Allowable limit	0.5 mm 0.0197 in.

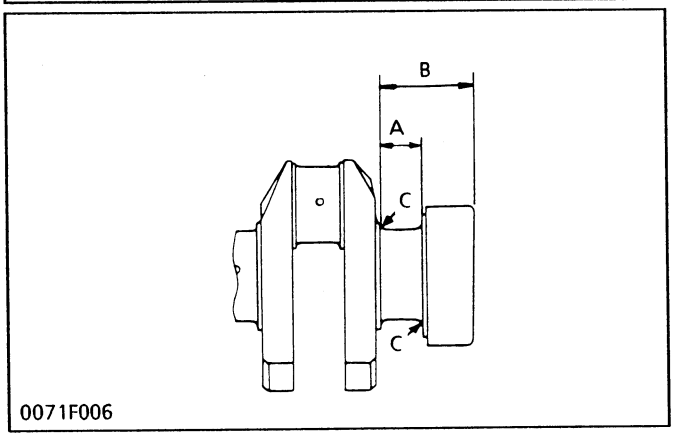

0071F006

(Reference)

- Oversize thrust bearing

Oversize	Bearing	Code Number	Marking
0.2 mm 0.008 in.	Thrust bearing 1 02	15261-23951	020 OS
	Thrust bearing 2 02	15261-23971	020 OS
0.4 mm 0.016 in.	Thrust bearing 1 04	15261-23961	040 OS
	Thrust bearing 2 04	15261-23981	040 OS

- Oversize dimensions of crankshaft journal

Oversize / Dimension	0.2 mm 0.008 in.	0.4 mm 0.016 in.
A	23.40 to 23.45 mm 0.9134 to 0.9154 in.	23.80 to 23.85 mm 0.9213 to 0.9232 in.
B	46.1 to 46.3 mm 1.815 to 1.823 in.	46.3 to 46.5 mm 1.823 to 1.831 in.
C	1.8 to 2.2 mm radius 0.071 to 0.087 in. radius	1.8 to 2.2 mm radius 0.071 to 0.087 in. radius
The crankshaft journal must be fine-finished to higher than ∇∇∇∇ (0.4S).		

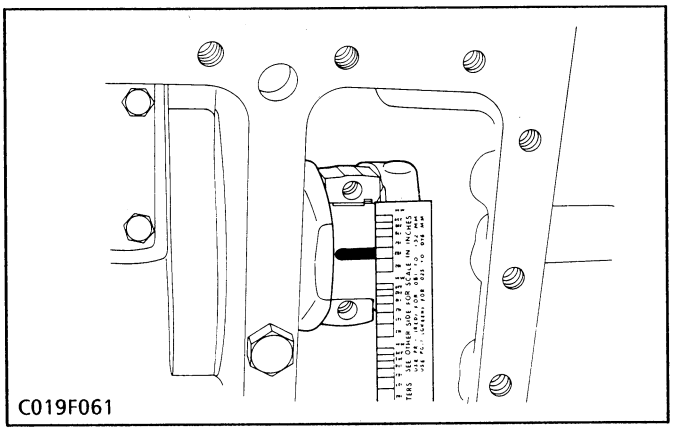
C019F061

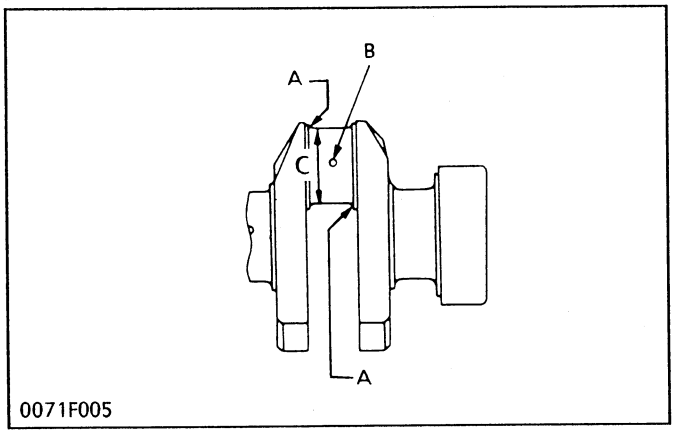

0071F005

Oil Clearance between Crank Pin and Crank Pin Bearing

1. Clean the crank pin and crank pin bearing.
2. Put a strip of plastigage (Code No. 07909-30241) on the center of the crank pin.

■ IMPORTANT

- **Never insert the press gauge into the crank pin oil hole.**

3. Install the connecting rod cap and tighten the connecting rod screws to the specified torque (26.5 to 30.4 N·m, 2.7 to 3.1 kgf·m, 19.5 to 22.4 ft-lbs), and remove the cap again.

■ NOTE

- **Be sure not to move the crankshaft while the connecting rod screws are tightened.**

4. Measure the amount of the flattening with the scale, and get the oil clearance.
5. If the oil clearance exceeds the allowable limit, replace the crank pin bearing.
6. If the same size bearing is useless because of the crank pin wear, replace it with an undersize one referring to the table and figure.

Oil clearance between crank pin and crank pin bearing	Factory spec.	0.019 to 0.081 mm 0.00075 to 0.00319 in.
	Allowable limit	0.15 mm 0.0059 in.

Crank pin O.D.	Factory spec.	33.959 to 33.975 mm 1.33697 to 1.33759 in.
Crank pin bearing I.D.	Factory spec.	33.994 to 34.040 mm 1.33835 to 1.34016 in.

(Reference)

- Undersize crank pin bearing

Undersize	Bearing	Code Number	Marking
0.2 mm 0.008 in.	Crank pin bearing 02	15861-22971	020 US
0.4 mm 0.016 in.	Crank pin bearing 04	15861-22981	040 US

- Undersize dimensions of crank pin

Undersize / Dimension	0.2 mm 0.008 in.	0.4 mm 0.016 in.
A	2.3 to 2.7 mm radius 0.091 to 0.106 in. radius	2.3 to 2.7 mm radius 0.091 to 0.106 in. radius
B	4 mm dia. 0.16 in. dia.	4 mm dia. 0.16 in. dia.
C	33.759 to 33.775 mm 1.32910 to 1.32973 in.	33.559 to 33.575 mm 1.32122 to 1.32185 in.
The crank pin must be fine-finished to higher than ∇∇∇∇ (0.4S).		

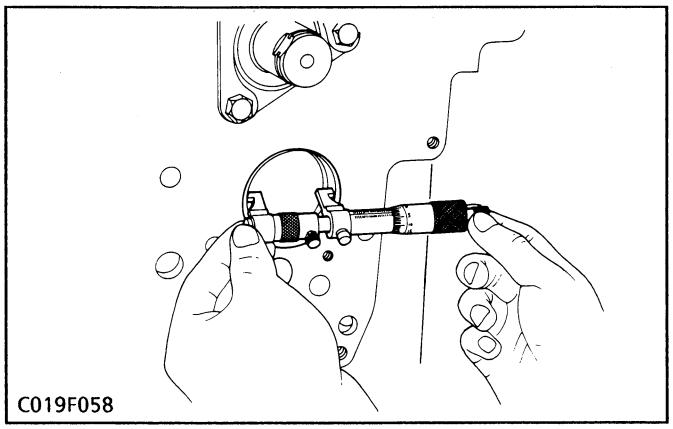
C019F058

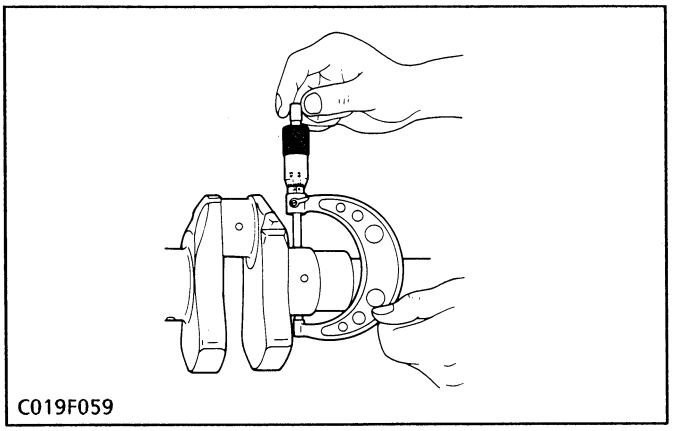
C019F059

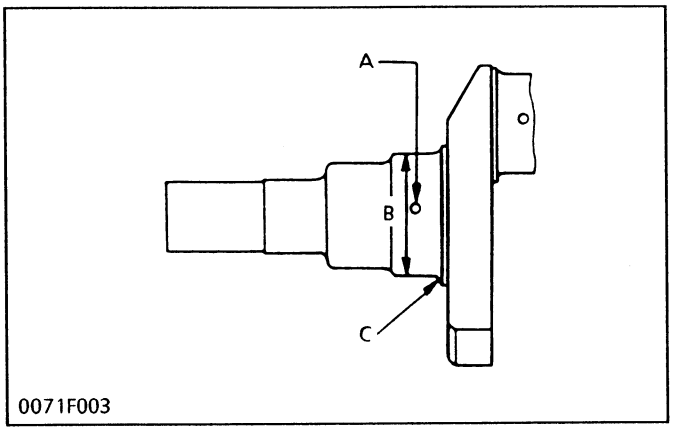

0071F003

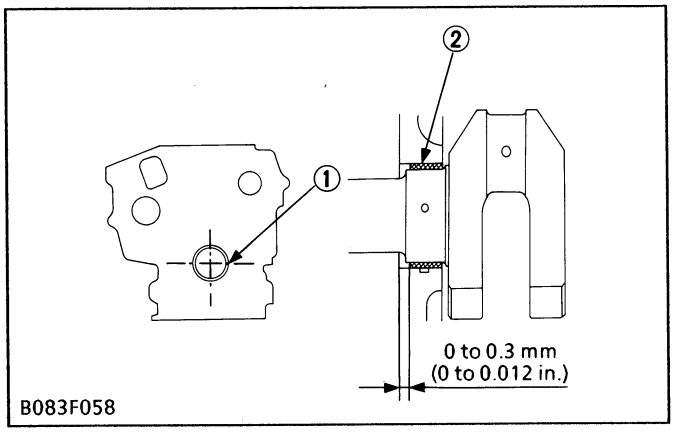

B083F058

(1) Seam (2) Crankshaft Bearing 1

Oil Clearance between Crankshaft Journal and Crankshaft Bearing 1

1. Measure the I.D. of the crankshaft bearing 1 with an inside micrometer.
2. Measure the O.D. of the crankshaft front journal with an outside micrometer, and calculate the oil clearance.
3. If the oil clearance exceeds the allowable limit, replace the crankshaft bearing 1.
4. If the same size bearing is useless because of the crankshaft journal wear, replace it with an undersize one referring to the table .

Oil clearance between crank shaft journal and crankshaft	Factory spec.	0.034 to 0.106 mm 0.00134 to 0.00417 in.
	Allowable limit	0.20 mm 0.0079 in.

Crankshaft journal O.D.	Factory spec.	39.934 to 39.950 mm 1.57221 to 1.57284 in.
Crankshaft bearing 1 I.D.	Factory spec.	39.984 to 40.040 mm 1.57418 to 1.57638 in.

(Reference)

- Undersize crank shaft bearing 1

Undersize	Bearing	Code Number	Marking
0.2 mm 0.008 in.	Crankshaft bearing 1 02	15861-23911	020 US
0.4 mm 0.016 in.	Crankshaft bearing 1 04	15861-23921	040 US

- Undersize dimensions of crank shaft journal

Undersize / Dimension	0.2 mm 0.008 in.	0.4 mm 0.016 in.
A	5 mm dia. 0.20 in. dia.	5 mm dia. 0.20 in. dia.
B	39.734 to 39.750 mm 1.56433 to 1.56496 in.	39.534 to 39.550 mm 1.55646 to 1.55709 in.
C	1.8 to 2.2 mm radius 0.071 to 0.087 in. radius	1.8 to 2.2 mm radius 0.071 to 0.087 in. radius

- The crankshaft journal must be fine-finished to higher than ∇∇∇∇ (0.4S).
- Chamfer the oil hole with an oilstone.

Replacing Crankshaft Bearing 1

(When removing)

1. Using a crankshaft bearing 1 replacing tool (see page S-22), press out the used crankshaft bearing.

(When installing)

1. Clean a new crankshaft bearing 1 and crankshaft journal, and apply engine oil to them.
2. Using a crankshaft bearing 1 replacing tool, press in a new bearing 1 (2) so that its seam (1) directs toward the exhaust side in the cylinder block. (See figure)

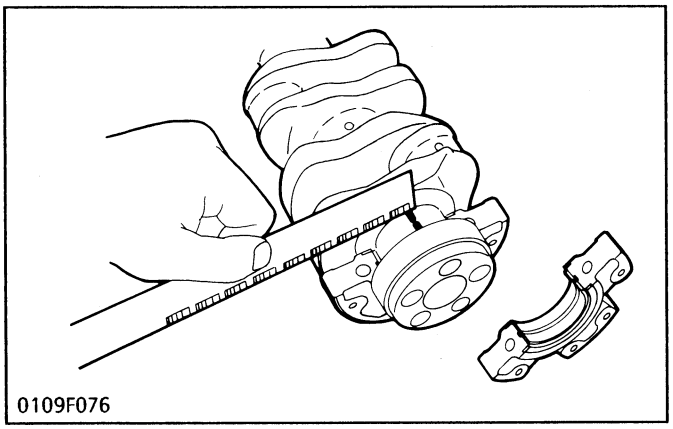
0109F076

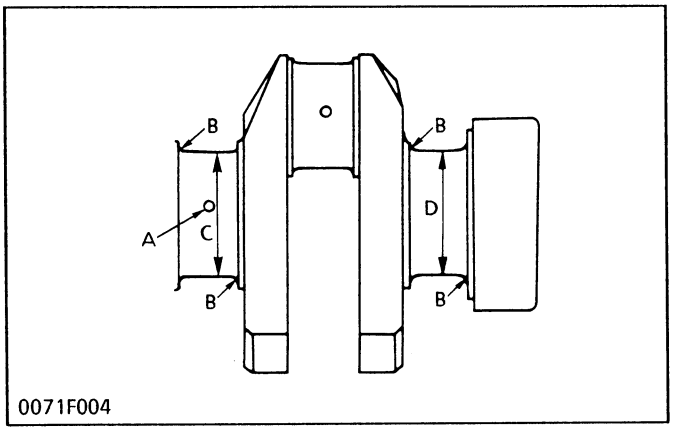

0071F004

Oil Clearance between Crankshaft Journal and Crankshaft Bearing 2 and 3

1. Put a strip of plastigage (Code No. 07909-30241) on the center of the journal.
2. Install the bearing case and tighten the bearing case screws 1 to the specified torque (12.7 to 15.7 N·m, 1.3 to 1.6 kgf·m, 9.4 to 11.6 ft-lbs), and remove the bearing case again.

■ **NOTE**

- **Be sure not to move the crankshaft while the bearing case screws are tightened.**

3. Measure the amount of the flattening with the scale, and get the oil clearance.
4. If the oil clearance exceeds the allowable limit, replace the crankshaft bearing 2 or 3.
5. If the same size bearing is useless because of the crankshaft journal wear, replace it with an undersize one referring to the table and figure.

Oil clearance between crankshaft journal and crankshaft bearing 2 and 3	Factory spec.	0.034 to 0.092 mm 0.00134 to 0.00362 in.
	Allowable limit	0.20 mm 0.0079 in.

Crankshaft journal O.D. (Flywheel side)	Factory spec.	43.934 to 43.950 mm 1.72969 to 1.73032 in.
Crankshaft bearing 2 I.D.	Factory spec.	43.984 to 44.026 mm 1.73166 to 1.73331 in.
Crankshaft journal O.D. (Intermediate)	Factory spec.	39.934 to 39.950 mm 1.57221 to 1.57284 in.
Crankshaft bearing 3 I.D.	Factory spec.	39.984 to 40.026 mm 1.57418 to 1.57583 in.

(Reference)

- Undersize crankshaft bearing 2 and 3

Undersize	Bearing	Code Number	Marking
0.2 mm 0.008 in.	Crankshaft bearing 2 02	15694-23931	020 US
	Crankshaft bearing 3 02	15861-23861	020 US
0.4 mm 0.016 in.	Crankshaft bearing 2 04	15694-23941	040 US
	Crankshaft bearing 3 04	15861-23871	040 US

- Undersize dimensions of crankshaft journal

Undersize / Dimension	0.2 mm 0.008 in.	0.4 mm 0.016 in.
A	3 mm dia. 0.12 in. dia.	3 mm dia. 0.12 in. dia.
B	1.8 to 2.2 mm radius 0.071 to 0.087 in. radius	1.8 to 2.2 mm radius 0.071 to 0.087 in. radius
C	39.734 to 39.750 mm 1.56433 to 1.56496 in.	39.534 to 39.550 mm 1.55646 to 1.55709 in.
D	43.734 to 43.750 mm 1.72181 to 1.72244 in.	43.534 to 43.550 mm 1.71394 to 1.71457 in.
The crank pin jounrnal must be fine-finished to higher than ∇∇∇∇ (0.4S).		

[5] CYLINDER

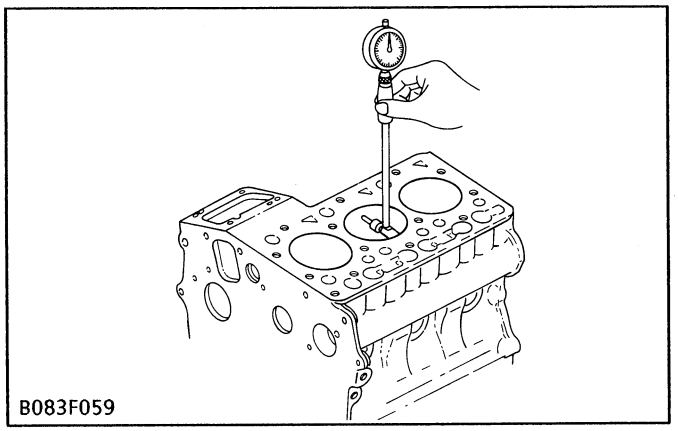
B083F059

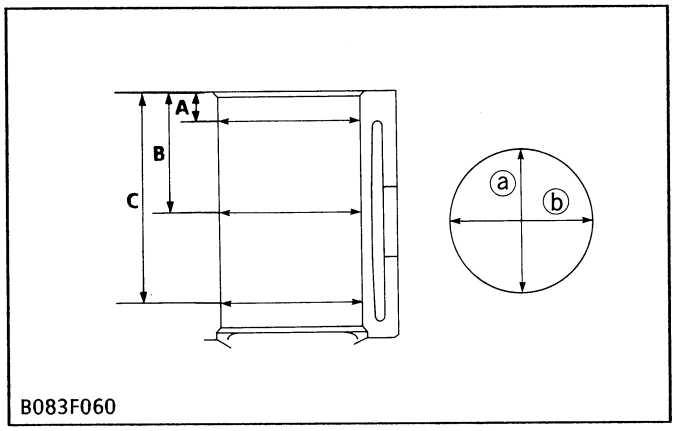

B083F060

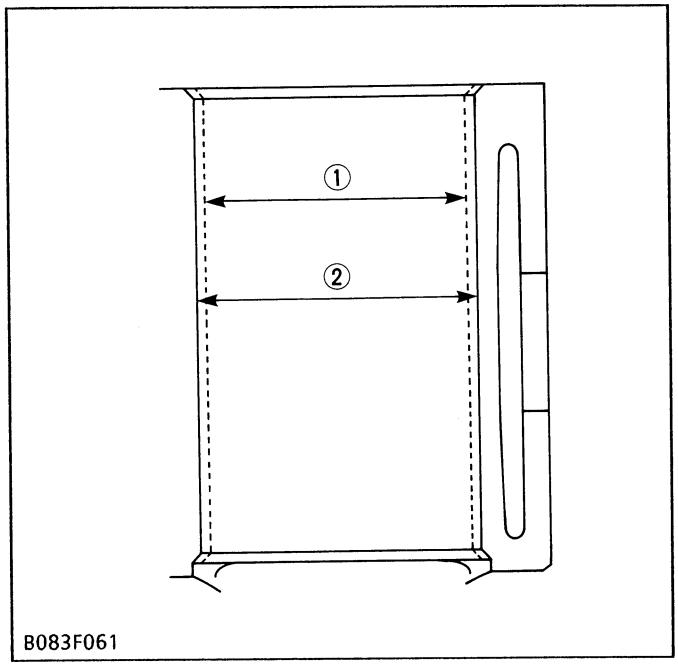

B083F061

(1) Cylinder I.D. (Before Correction) (2) Oversize Cylinder I.D.

Cylinder Wear

1. Measure the I.D. of the cylinder at the six positions (See figure) with a cylinder gauge to find the maximum and minimum I.D.'s.
2. Get the difference (Maximum wear) between the maximum and the minimum I.D.'s
3. If the wear exceeds the allowable limit, bore and hone to the oversize dimension. (Refer to **"Correcting Cylinder"**)
4. Visually check the cylinder wall for scratches. If deep scratches are found, the cylinder should be bored. (Refer to **"Correcting Cylinder"**)

Cylinder I.D.	Factory spec.	Z442-B D662-B	64.000 to 64.019 mm 2.51968 to 2.52043 in.
		Z482-B D722-B	67.000 to 67.019 mm 2.63779 to 2.63854 in.
Maximum wear	Allowable limit		0.15 mm 0.0059 in.

A : Approx. 10 mm (0.394 in.)
B : Approx. 45 mm (1.771 in.)
C : Approx. 95 mm (3.740 in.)
a : Right-angled to Piston Pin
b : Piston Pin Direction

Correcting Cylinder

1. When the cylinder is worn beyond the allowable limit, bore and hone it to the specified dimension.

Oversize cylinder I.D.	Factory spec.	Z442-B D662-B	64.250 to 64.269 mm 2.52953 to 2.53028 in.
		Z482-B D722-B	67.250 to 67.269 mm 2.64764 to 2.64839 in.
Maximum wear	Allowable limit		0.15 mm 0.0059 in.

2. Replace the piston and piston rings with oversize ones.

Oversize	Model	Part Name	Code Number	Marking
0.25 mm 0.0098 in.	Z442-B D662-B	Piston	16861-21900	0.25 OS
		Piston ring assembly	16861-21090	0.25 OS
	Z482-B D722-B	Piston	16851-21900	0.25 OS
		Piston ring assembly	16851-21090	0.25 OS

■ **NOTE**

- **When the oversize cylinder is worn beyond the allowable limit, replace the cylinder block with a new one.**

2 LUBRICATING SYSTEM

CHECKING

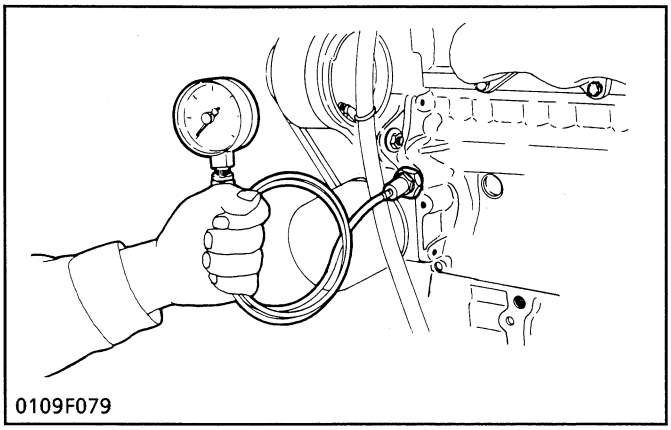
0109F079

Engine Oil Pressure

1. Remove the oil pressure switch, and install the engine oil pressure tester (Code No. 07916-32032). (Adaptor screw size: PT1/8).
2. Start the engine. After warming up, measure the oil pressure of both idling and rated speeds.
3. If the oil pressure is less than the allowable limit, check the following.

- Engine oil insufficient
- Oil pump defective
- Oil strainer clogged
- Oil filter cartridge clogged
- Oil gallery clogged
- Excessive oil clearance
- Foreign matter in the relief valve

Engine oil pressure	At idle speed	Factory spec.	98 kPa 1.0 kgf/cm^2 14 psi
	At rated speed	Factory spec.	196 to 441 kPa 2.0 to 4.5 kgf/cm^2 28 to 64 psi
		Allowable limit	98 kPa 1.0 kgf/cm^2 14 psi

(When reassembling)

- After checking the engine oil pressure, tighten the oil pressure switch to the specified torque.

Tightening torque	Oil pressure switch	14.7 to 19.6 N·m 1.5 to 2.0 kgf·m 10.8 to 14.5 ft-lbs

DISASSEMBLING AND ASSEMBLING

Oil Pump

1. See page S-31.

SERVICING

[1] OIP PUMP

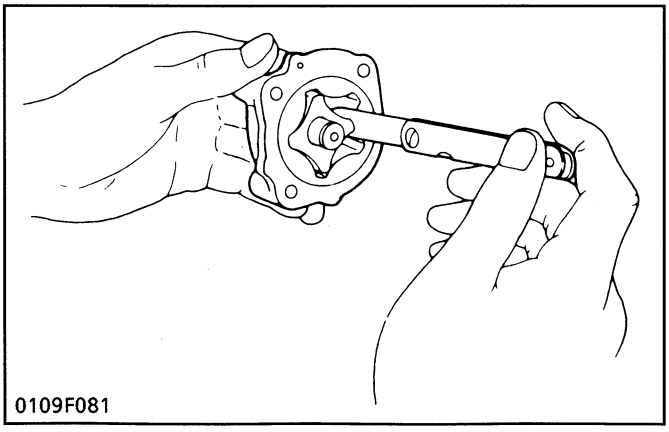
0109F081

Rotor Lobe Clearance

1. Measure the clearance between lobes of the inner rotor and the outer rotor with a feeler gauge.
2. If the clearance exceeds the allowable limit, replace the oil pump rotor assembly.

Rotor lobe clearance	Factory spec.	0.03 to 0.14 mm 0.012 to 0.0055 in.

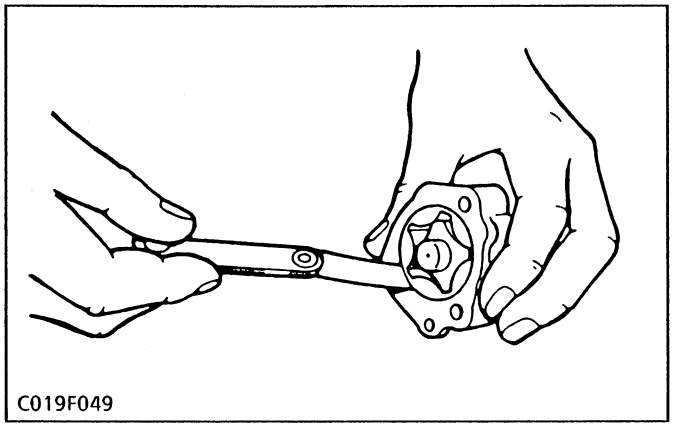
C019F049

Clearance between Outer Rotor and Pump Body

1. Measure the clearance between the outer rotor and the pump body with a feeler gauge.
2. If the clearance exceeds the allowable limit, replace the oil pump rotor assembly.

Clearance between outer rotor and pump body	Factory spec.	0.07 to 0.15 mm 0.0028 to 0.0059 in.

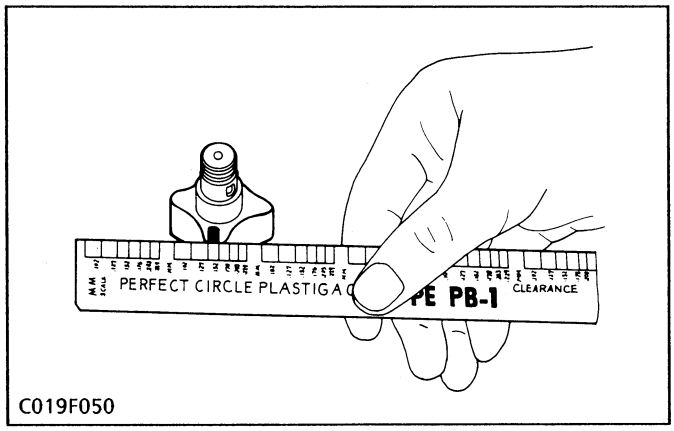

C019F050

Clearance between Rotor and Cover

1. Put a strip of press gauge (Code No. 07909-30241) onto the rotor face with grease.
2. Install the cover and tighten the screws.
3. Remove the cover carefully, and measure the width of the press gauge with a sheet of gauge.
4. If the clearance exceeds the allowable limit, replace oil pump rotor assembly.

Clearance between rotor and cover	Factory spec.	0.075 to 0.135 mm 0.0029 to 0.0053 in.

3 COOLING SYSTEM

CHECKING AND ADJUSTING

[1] FAN BELT

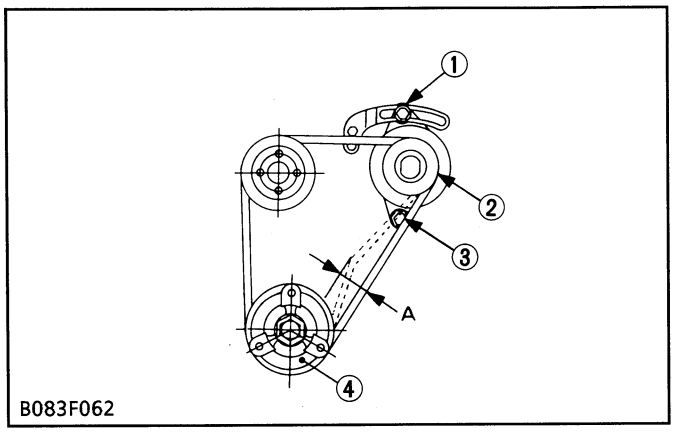

Fan Belt Tension

1. Measure the deflection (A), depressing the belt halfway between the fan drive pulley (4) and dynamo pulley (2) at specified force (98 N, 10 kgf, 22 lbs).
2. If the measurement is not the factory specification, loosen the dynamo mounting screws (1), (3) and relocate the dynamo to adjust.

Fan belt tension (Deflection **A**)	Factory spec.	Approx. 10 mm/98 N Approx. 0.39 in./10 kgf (22.1 lbs)

(1) Dynamo Mounting Screw
(2) Dynamo Pulley
(3) Dynamo Mounting Screw
(4) Fan Drive Pulley

[2] RADIATOR

CAUTION

- **Never remove the radiator cap while operating or immediately after stopping. Otherwise, hot water will spout out from the radiator. Wait for more than ten minutes to cool the radiator, before opening the cap.**

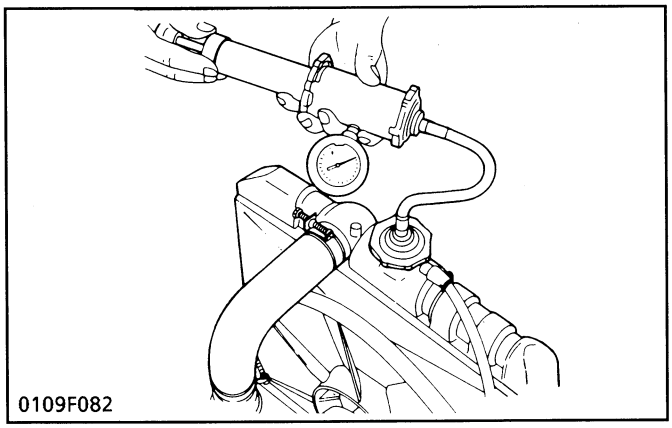

Radiator Water Tightness

1. Pour a specified amount of water into the radiator.
2. Warm up the engine and stop it.
3. Set a radiator tester (Code No. 07909-31551) and raise the water pressure to the specified pressure.
4. Check the radiator for water leaks.
5. For water leak from the pinhole, repair with the radiator cement. When water leak is excessive, replace the radiator.

Radiator leakage test pressure	Factory spec.	157 kPa 1.6 kgf/cm^2 23 psi

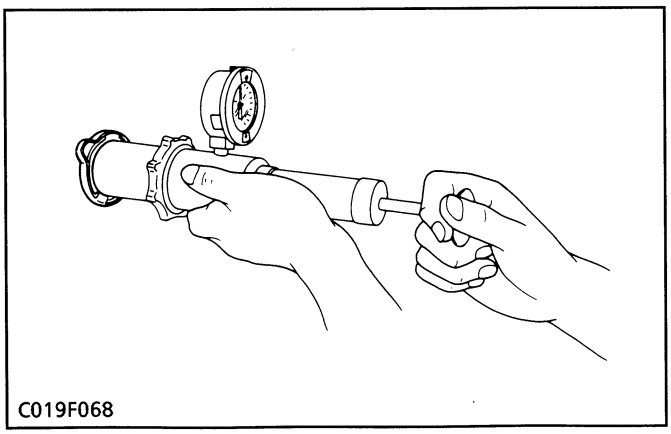

Radiator Cap Tightness

1. Set a radiator tester on the radiator cap.
2. Apply the pressure of 88 kPa (0.9 kgf/cm^2, 13 psi) and measure the time for the pressure to fall to 59 kPa (0.6 kgf/cm^2, 9 psi).
3. If the measurement is less than the factory specification, replace the radiator cap.

Radiator cap tightness (Pressure falling time)	Factory spec.	More than 10 seconds for pressure fall from 88 to 59 kPa (from 0.9 to 0.6 kgf/cm^2, from 13 to 9 psi)

[3] THERMOSTAT

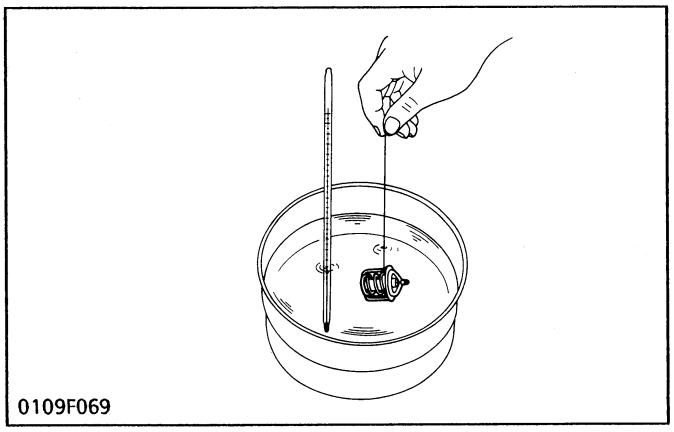

Thermostat Valve Opening Temperature

1. Suspend the thermostat in the water by a string with its end inserted between the valve and seat.
2. Heating the water gradually, read the temperature when the valve opens and leaves the string.
3. Continue heating and read the temperature when the valve opens approx. 6 mm (0.236 in.).
4. If the measurement is not within the factory specifications, replace the thermostat.

Thermostat's valve opening temperature	Factory spec.	69.5 to 72.5 °C 157.1 to 162.5 °F
Temperature at which thermostat completely opens	Factory spec.	85 °C 185 °F

DISASSEMBLING AND ASSEMBLING

[1] THERMOSTAT AND WATER PUMP

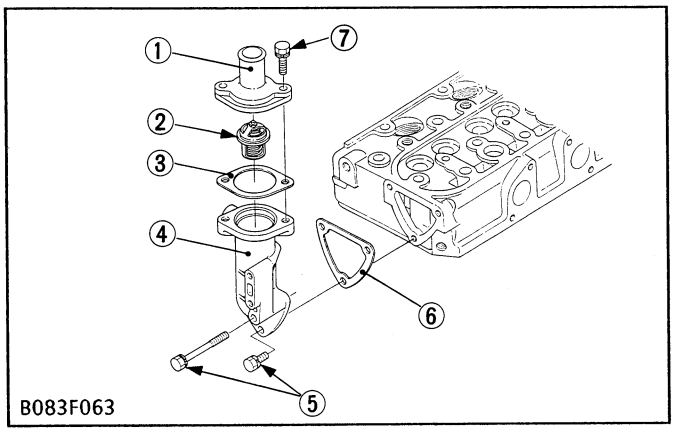

Thermostat and Water Flange

1. Unscrew the thermostat cover mounting screws (7), and remove the thermostat cover (1).
2. Remove the thermostat (2).
3. Unscrew the water flange mounting screws (5), and remove the water flange (4).

(When reassembling)

- Apply liquid-type gasket (Three Bond 1215 or its equivalent) to both sides of a new thermostat cover gasket (3).
- Apply liquid-type gasket (Three Bond 1215 or its equivalent) to both sides of a new water flange gasket (6).

(1) Thermostat Cover
(2) Thermostat
(3) Thermostat Cover Gasket
(4) Water Flange
(5) Water Flange Mounting Screw
(6) Water Flange Gasket
(7) Thermostat Cover Mounting Screw

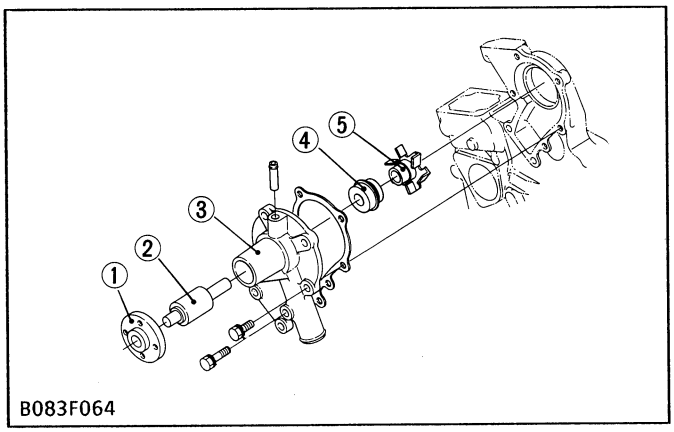

Water Pump

1. Unscrew the water pump mounting screws, and remove the water pump from the gear case cover.
2. Remove the water pump flange (1).
3. Press out the water pump shaft (2) with the impeller (5) on it.
4. Remove the impeller (5) from the water pump shaft (2).
5. Remove the mechanical seal (4).

(When reassembling)

- Apply liquid-type gasket (Three Bond 1215 or its equivalent) to both sides of a new water pump gasket.
- Replace the mechanical seal (4) with a new one.

(1) Water Pump Flange
(2) Water Pump Shaft
(3) Water Pump Body
(4) Mechanical Seal
(5) Impeller

4 FUEL SYSTEM

CHECKING AND ADJUSTING

[1] INJECTION NOZZLE

CAUTION

- **Check the nozzle injection pressure and condition after confirming that there is nobody standing in the direction the fume goes. If the fume from the nozzle directly contacts the human body, cells may be destroyed and blood poisoning may be caused.**

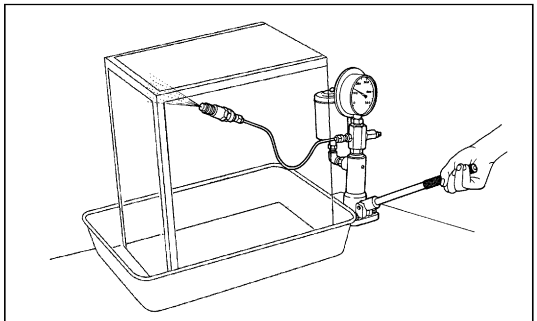

3TLABAB1P040A

Nozzle Injection Pressure

1. Set the injection nozzle to the nozzle tester.
2. Slowly move the tester handle to measure the pressure at which fuel begins jetting out from the nozzle.
3. If the measurement is not within the factory specifications, replace the injection nozzle assembly.

Fuel injection pressure	Factory spec.	13.73 to 14.71 MPa 140 to 150 kgf/cm^2 1991 to 2133 psi

(1) Adjusting Washer

W1037197

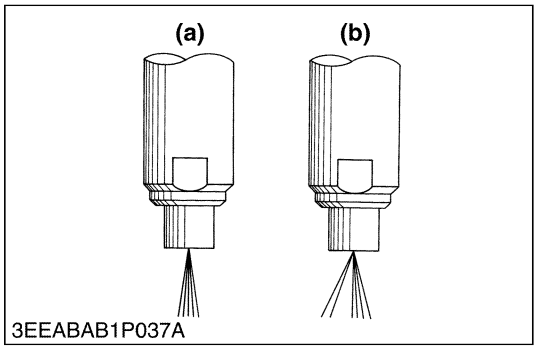

3EEABAB1P037A

Nozzle Spraying Condition

1. Set the injection nozzle to a nozzle tester (Code No. 07909-31361), and check the nozzle spraying condition.
2. If the spraying condition is defective, replace the injection nozzle assembly.

(a) Good **(b) Bad**

W1037394

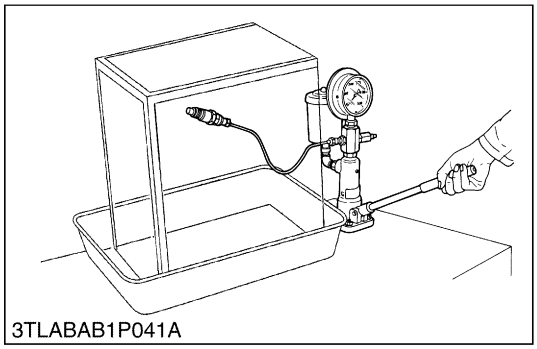

3TLABAB1P041A

Valve Seat Tightness

1. Set the injection nozzle to a nozzle tester (Code No. 07909-31361).
2. Raise the fuel pressure, and keep at 12.75 MPa (130 kgf/cm^2, 1849 psi) for 10 seconds.
3. If any fuel leak is found, replace the injection nozzle assembly.

Valve seat tightness	Factory spec.	No fuel leak at 12.75 MPa 130 kgf/cm^2 1849 psi

W1088949

[2] INJECTION PUMP

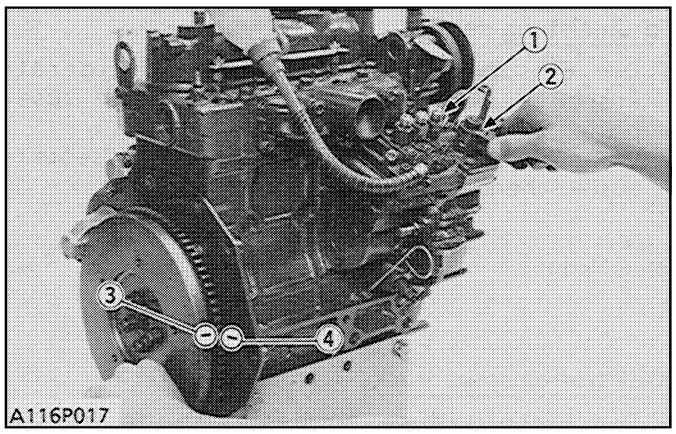

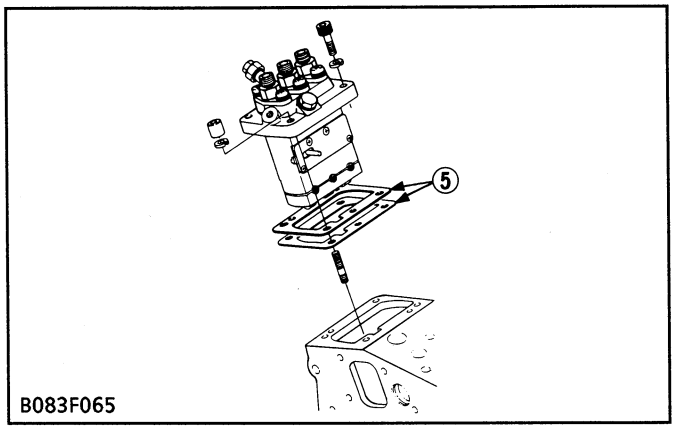

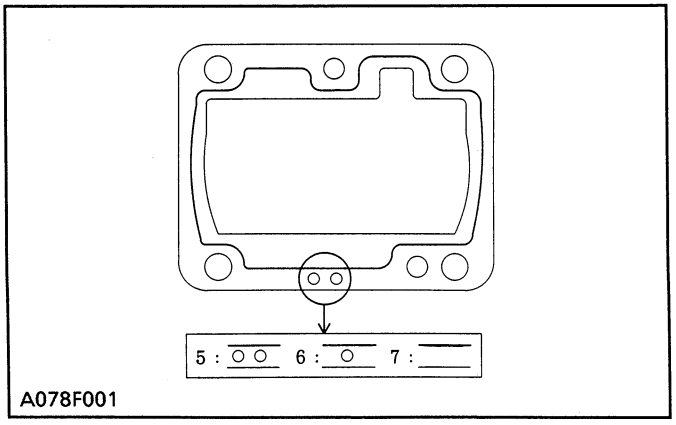

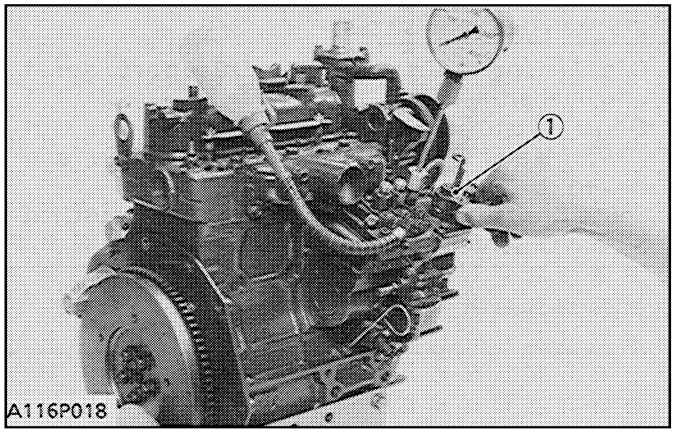

Injection Timing

1. Remove the injection pipes.
2. Set the speed control lever (2) to the maximum fuel discharge position.
3. Turn the flywheel until the fuel fills up to the hole of the delivery valve holder (1).
4. Turn the flywheel further to check the injection timing, and stop turning when the fuel begins to flow over again.
5. Check to see if the mark or timing angle lines (3) on the flywheel is aligned with the punch mark (4).
6. If the timing is out of adjustment, readjust the timing with shims.

(Injection Timing)
0.35 to 0.38 rad.(20° to 22°) B.T.D.C

■ NOTE

(Engine serial number : ~489290)

- **Shims are available in thickness of 0.15 mm, 0.30 mm. Combine these shims for adjustments.**
- **Addition or reduction of shim (0.15 mm, 0.0059 in.) delays or advances the injection timing by approx. 0.026 rad (1.5°).**
- **After adjusting the injection timing, apply liquid-type gasket (Three Bond 1215 or its equivalent) to both sides of the injection pump shim before reassembling.**

(Engine serial number : 489291~)

- **The sealant is applied to both sides of the soft metal gasket shim. The liquid gasket is not required for assembling.**
- **Shims are available in thickness of 0.20 mm, 0.25 mm and 0.30 mm. Combine these shims for adjustments.**
- **Addition or reduction of shim (0.05 mm, 0.0020 in.) delays or advances the injection timing by approx. 0.0087 rad (0.5°).**
- **In disassembling and replacing, be sure to use the same number of new gasket shims with the same thickness.**

(1) Delivery Valve Holder
(2) Speed Control Lever
(3) Mark
(4) Mark
(5) 2-holes : 0.20 mm
(6) 1-hole : 0.25 mm
(7) Without hole : 0.30 mm

Pump Element Fuel Tightness

1. Remove the injection pipes and injection nozzles.
2. Install the pressure tester (see page S-23) to the injection pump.
3. Set the speed control lever (1) to the maximum fuel discharge position.
4. Turn the flywheel counterclockwise to raise the fuel pressure.
5. If the fuel pressure can not reach the allowable limit, replace the pump element or injection pump assembly.

Pump element fuel tightness (Fuel pressure)	Allowable limit	14.71 MPa 150 kgf/cm² 2133 psi

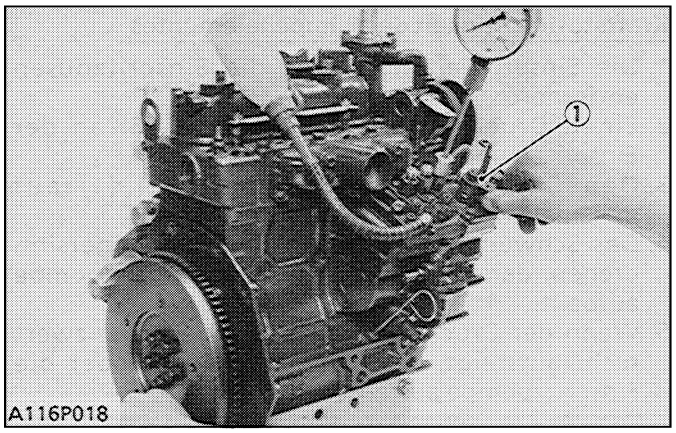

(1) Speed Control Lever

Delivery Valve Fuel Tightness

1. Remove the injection pipes and injection nozzles.
2. Install the pressure tester (see page S-23) to the injection pump.
3. Set the speed control lever (1) to the maximum fuel discharge position.
4. Turn the flywheel counterclockwise to raise the fuel pressure to 14.71 MPa (150 kgf/cm^2, 2133 psi).
5. Set the plunger of the injection pump at the bottom dead center to reduce the delivery chamber pressure to zero.
6. Measure the falling time of the fuel pressure from 14.71 to 13.73 MPa (from 150 to 140 kgf/cm^2, from 2133 to 1991 psi).
7. If the measurement is less than the allowable limit, replace the delivery valve or injection pump assembly.

Pressure falling time	Allowable limit	5 seconds

DISASSEMBLING AND ASSEMBLING

[1] INJECTION NOZZLE

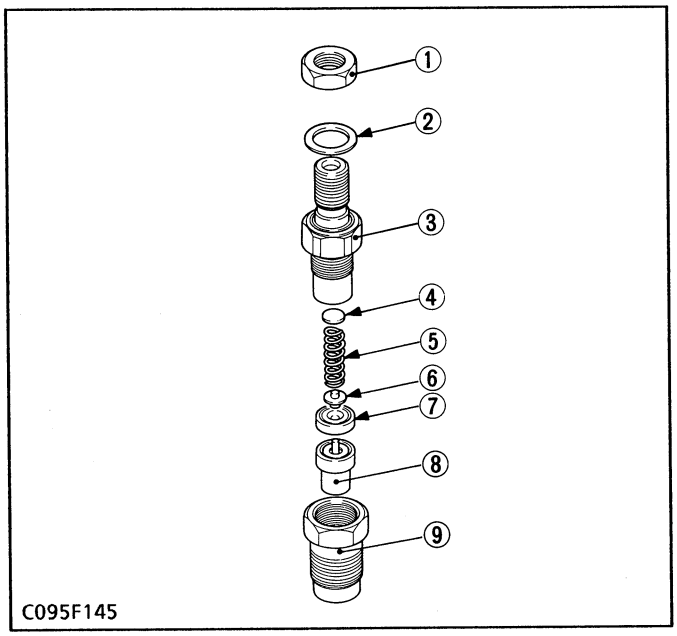

(1) Fuel Overflow Pipe Nut
(2) Plain Washer
(3) Nozzle Holder
(4) Adjusting Washer
(5) Nozzle Spring
(6) Push Rod
(7) Distance Piece
(8) Nozzle Piece
(9) Nozzle Retaining Nut

Injection Nozzle

1. Remove the injection nozzle from the cylinder head.
2. Secure the nozzle retaining nut (9) in a vise.
3. Remove the nozzle holder (3), and take out the adjusting washer (4), nozzle spring (5), push rod (6), distance piece (7) and nozzle piece (8).

(When reassembling)

- Assemble the injection nozzle in clean fuel.
- Install the push rod (6), noting its direction.

Tightening torque	Fuel overflow pipe nut	19.6 to 24.5 N·m 2.0 to 2.5 kgf·m 14.5 to 18.1 ft-lbs
	Nozzle holder (3) to nozzle retaining nut (9)	34.3 to 39.2 N·m 3.5 to 4.0 kgf·m 25.3 to 28.9 ft-lbs
	Injection nozzle to cylinder head	49.0 to 68.6 N·m 5.0 to 7.0 kgf·m 36.2 to 50.6 ft-lbs

■ IMPORTANT

- **The nozzle piece is precisely finished. Do not use a piece of metal but a piece of wood to remove the carbon deposits.**
- **After assembling the nozzle, be sure to adjust the injection pressure. (See "Fuel Injection Pressure")**

5 ELECTRICAL SYSTEM

CHECKING

[1] DYNAMO AND REGULATOR

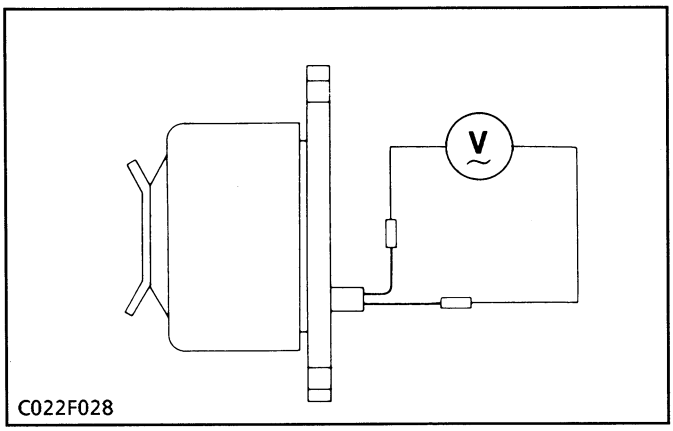

Dynamo No-load Voltage

1. Disconnect the lead wire from the Dynamo.
2. Start the engine and measure the voltage generated by the Dynamo
3. Measure the output voltage with a voltmeter.
   If the measurement is not within the factory specifications, replace the dynamo.

No load dynamo voltage	Factory spec.	AC20V or more at 5200 rpm

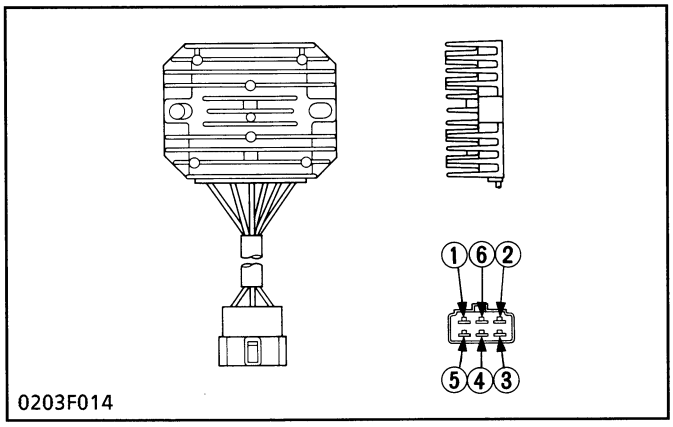

(1) Blue
(2) Blue
(3) Red
(4) Yellow
(5) Green
(6) Black

Continuity across Regulator's Terminals

1. Measure with a circuit tester according to the list below.

■ **NOTE**

- **For this test, use only Analog Meter and do not use a high voltage tester such as a MΩ meter.**
- **This check sheet shows the results of the test conducted by using the "Sanwa-made testers SP-10 and SP-15D" (Analog Meter).**
- **Use of other testers than those above may show different measured results. Ω shall be used as the unit for the measuring range.**
- **The judgment shold be as below table. "ON" if the indicator moves, otherwise "OFF".**

■ **Check Table**

Tester + terminal / Tester		Cord colors					
		blue	blue	red	yellow	green	black
Cord colors	blue		OFF	**ON**	OFF	OFF	OFF
	blue	OFF		**ON**	OFF	OFF	OFF
	red	OFF	OFF		OFF	OFF	OFF
	yellow	**ON**	**ON**	**ON**		OFF	**ON**
	green	OFF	OFF	OFF	OFF		OFF
	black	OFF	OFF	OFF	OFF	OFF	

[2] STARTER

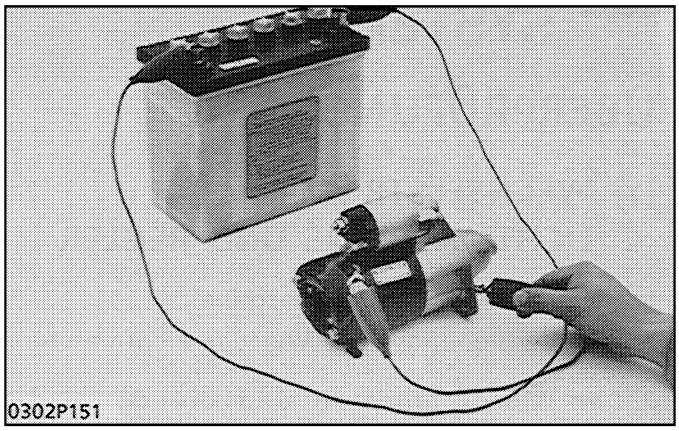
0302P151

Motor Test

1. Disconnect the connecting lead from the "C" terminal of the starter and connect a jumper lead from the connecting lead to the positive battery terminal.
2. Connect a jumper lead momentarily between the starter body and the negative battery terminal.
3. If the motor does not run, check the motor.

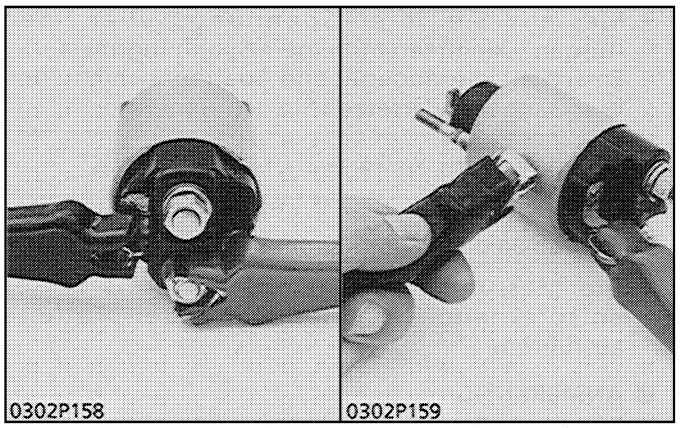
0302P158 0302P159

Magnet Switch

■ **NOTE**

- **Each test should be carried out for a start time (3 to 5 seconds), and at half of the rated voltage (6V).**

1) Checking Pull-in Coil

1. Connect jumper lead from the battery's negative terminal post to the "**C**" terminal.
2. The plunger should be attracted strongly when a jumper lead is connected from the battery positive terminal to the "**S**" terminal.

2) Checking Holding Coil

1. Connect jumper leads from the battery's negative terminal post to the body and the battery's positive terminal post to the "**S**" terminal.
2. Push the plunger in by hand and release it. Then, the plunger should remain being attracted.

[3] GLOW PLUG

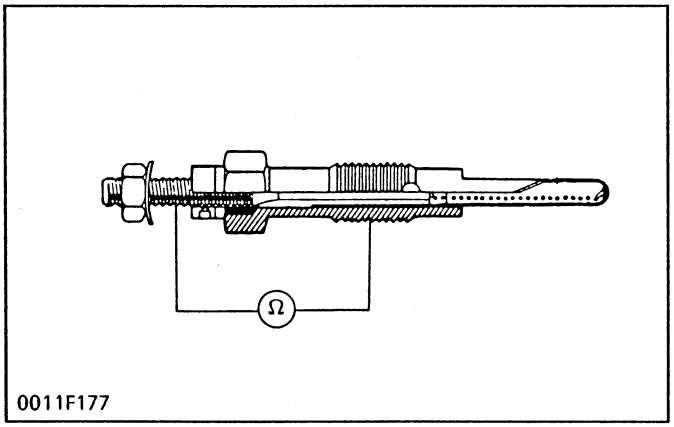

0011F177

Glow Plug

1. Disconnect the leads from the glow plugs.
2. Measure the resistance with circuit tester across the glow plug terminal and the housing.
3. If 0 ohm is indicated, the screw at the tip of the glow plug and the housing are short-circuited.
   If the reference value is not indiacated, the glow plug is faulty, replace the glow plug.

Glow plug resistance	Factory spec.	Approx. 0.9 Ω

DISASSEMBLING AND ASSEMBLING

[1] STARTER

Disassembling Starter

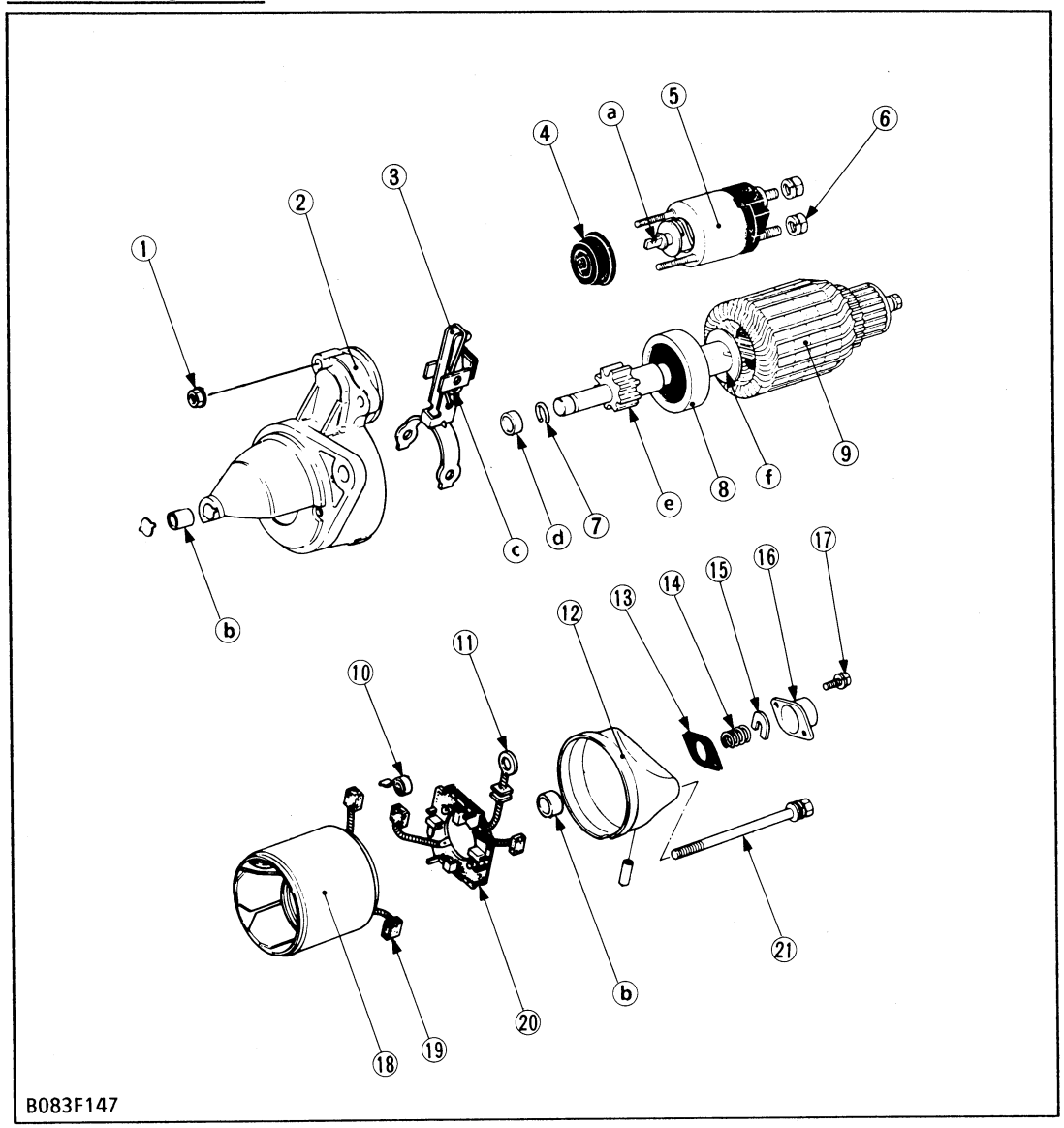

(1) Solenoid Switch Mounting Nut
(2) Starter Drive Housing
(3) Drive Lever
(4) Gasket
(5) Solenoid Switch
(6) Nut
(7) Snap Ring
(8) Overrunning Clutch
(9) Armature
(10) Brush Spring
(11) Connecting Lead
(12) Rear End Frame
(13) Gasket
(14) Brake Spring
(15) Brake Shoe
(16) End Frame Cap
(17) Screw
(18) Yoke
(19) Brush
(20) Brush Holder
(21) Through Bolt

1. Unscrew the mounting nut (6), and disconnect the connecting lead (11).
2. Unscrew the solenoid switch mounting nuts (1), and remove the solenoid switch (5).
3. Remove the end frame cap (16).
4. Remove the brake shoe (15), brake spring (14) and gasket (13).
5. Unscrew the through bolts (21), and remove the rear end frame (12).
6. Remove the brush from the brush holder while holding the spring up.
7. Remove the brush holder (20).
8. Draw out the yoke (18) from the starter drive housing (2).
9. Draw out the armature (9) with the drive lever (3).

■ **NOTE**

- **Do not damage to the brush and commutator.**

(When reassembling)

- Apply grease (NIPPONDENSO No.50 or its equivalent) to the parts indicated in the figure.
  - Joint of solenoid switch (a)
  - Bushing (b)
  - Drive lever (c)
  - Collar (d)
  - Teeth of pinion gear (e)
  - Armature shaft (f)

SERVICING

[1] STARTER

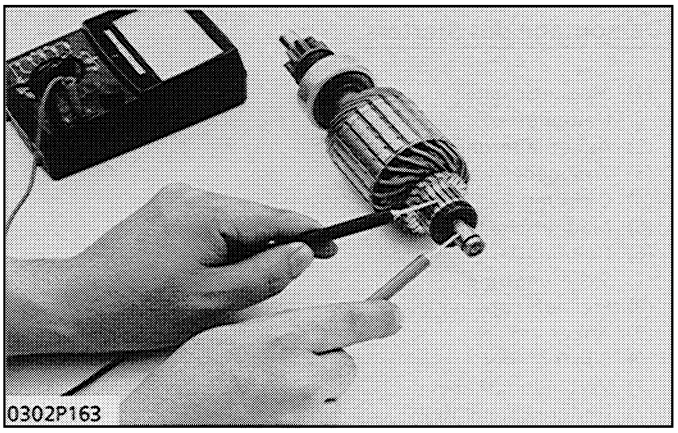

Armature Coil

1. Check the continuity across the commutator and armature shaft with an ohmmeter.
2. If it conducts, replace the armature.

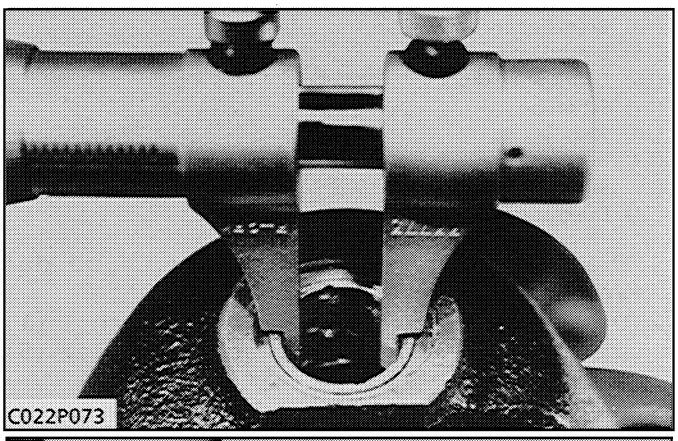

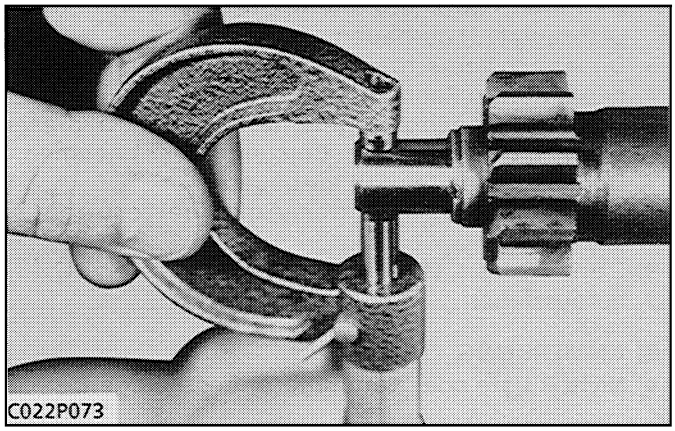

Clearance between Armature Shaft and Bushing

1. Measure the bushing I.D. of the drive side and commutator side.
2. Measure the armature shaft O.D. of the drive side and commutator side, and calculate the clearance.
3. If the clearance exceeds the allowable limit, replace the bushing.

Clearance between armature shaft and bushing	Factory spec.	Commutator side	0.03 to 0.10 mm 0.0012 to 0.0039 in.
		Drive side	0.05 to 0.10 mm 0.0020 to 0.0039 in.
	Allowable limit		0.20 mm 0.0079 in.

Armature shaft O.D.	Factory spec.	12.50 mm 0.4921 in.
Bushing I.D. (Commutator side)	Factory spec.	12.53 to 12.60 mm 0.4933 to 0.4961 in.
Bushing I.D. (Drive side)	Factory spec.	12.55 to 12.60 mm 0.4941 to 0.4961 in.

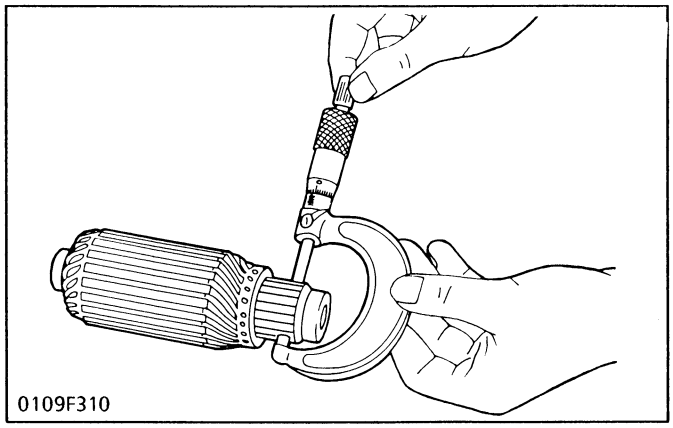
0109F310

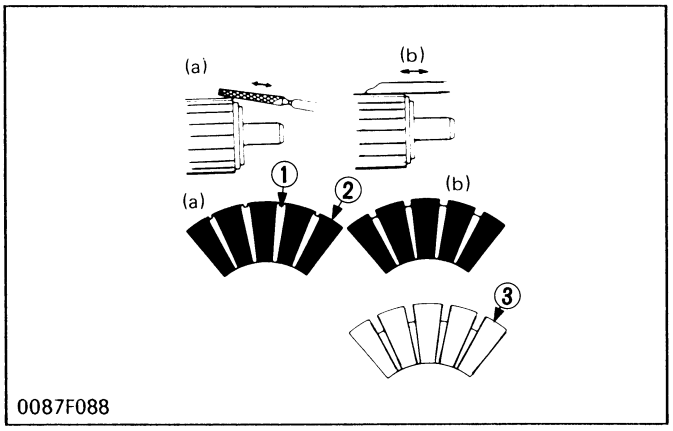

0087F088

(a) Bad

(1) Mica
(2) Segment

(b) Good

(3) Depth of Mica

Commutator and Mica

1. If the commutator surface is dirty or dusty, clean it with a sandpaper.
2. Measure the commutator O.D. with vernier calipers at several points.
3. If the difference of the O.D.'s exceeds the allowable limit, correct the commutator on a lathe to the factory specification.
4. If the minimum O.D. is less than the allowable limit, replace the armature.
5. Measure the mica undercut depth.
6. If the undercut is less than the allowable limit, correct with a saw blade and chamfer the segment edges.

Commutator O.D.	Factory spec.	28.0 mm 1.102 in.
	Allowable limit	27.0 mm 1.063 in.
Difference of O.D.'s	Factory spec.	Less than 0.05 mm 0.002 in.
	Allowable limit	0.4 mm 0.016 in.
Mica undercut	Factory spec.	0.5 to 0.8 mm 0.020 to 0.031 in.
	Allowable limit	0.2 mm 0.008 in.

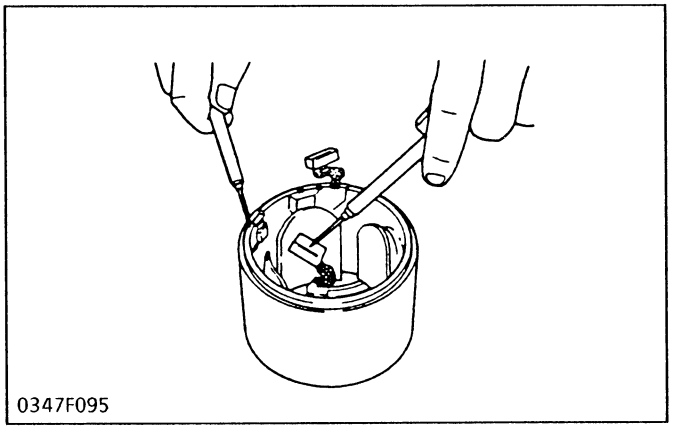
0347F095

Field Coil

1. Check the continuity across the yoke and brush with an ohmmeter.
2. If either are not conducting, replace the yoke assembly.

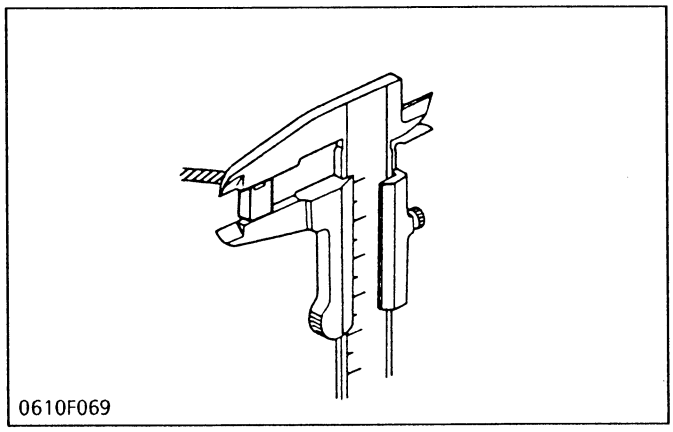
0610F069

Brush Wear

1. If the contact face of the brush is dirty or dusty, clean it with sand paper.
2. Measure the brush length with vernier calipers.
3. If the length is less than the allowable limit, replace the yoke assembly and brush holder.

Brush length	Factory spec.	16.0 mm 0.630 in.
	Allowable limit	10.5 mm 0.413 in.

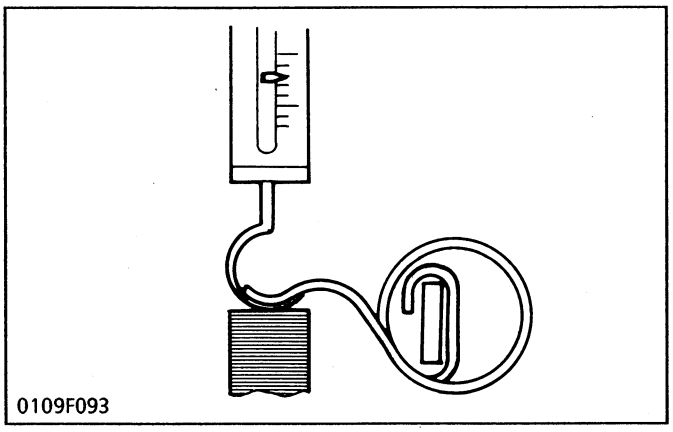
0109F093

Brush Spring

1. Pull the brush in the brush holder with a spring scale.
2. Measure the brush spring tension required to raise the spring from contact position with the commutator.
3. If the tension is less than the allowable limit, replace the spring.

Spring tension	Factory spec.	13.7 to 25.5 N 1.4 to 2.6 kgf 3.1 to 5.7 lbs
	Allowable limit	8.8 N 0.9 kgf 2.0 lbs

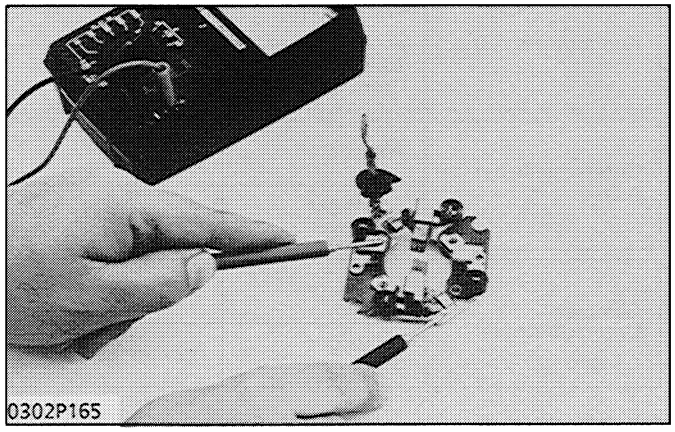
0302P165

Brush Holder

1. Check the continuity across the brush holder and holder support with an ohmmeter.
2. If it conducts, replace the brush holder.

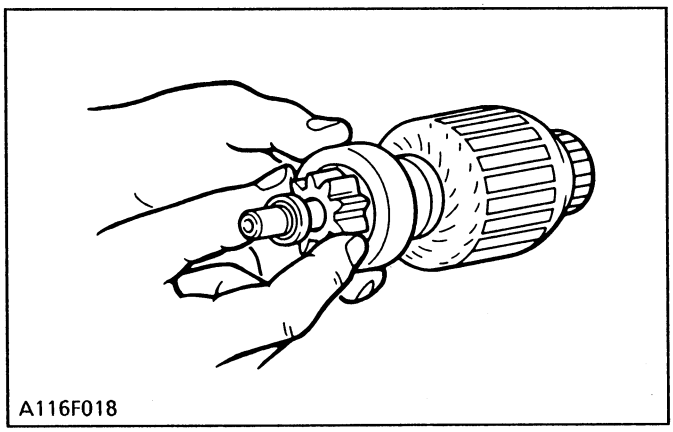
A116F018

Overrunning Clutch

1. Inspect the pinion for wear or damage.
2. If there is any defect, replace it.
3. Check that the pinion turns freely and smoothly in the overrunning direction and does not slip in the cranking direction.
4. If the pinion slips or does not turn in both directions, replace the overrunning clutch assembly.

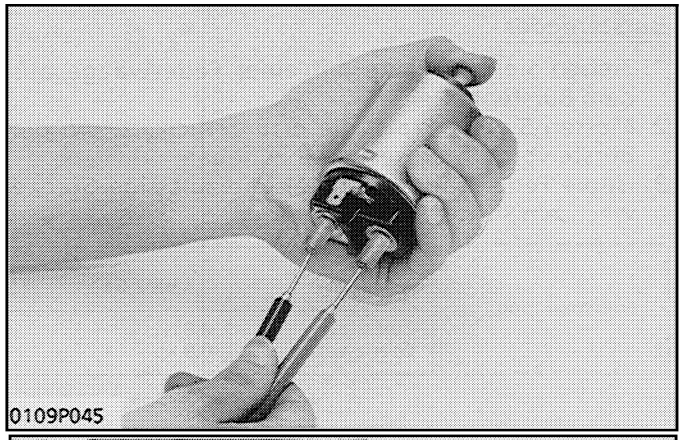
0109P045

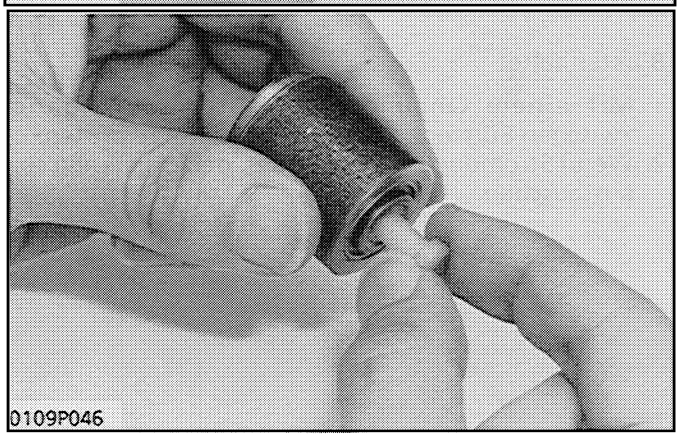
0109P046

Solenoid Switch

1. Check the continuity across **"B"** and **"M"** terminals with an ohmmeter, pushing in the plunger.
2. If not continuous or if a certain value is indicated, replace the solenoid switch.
3. Pull the pull-rod to check the spring built in the plunger

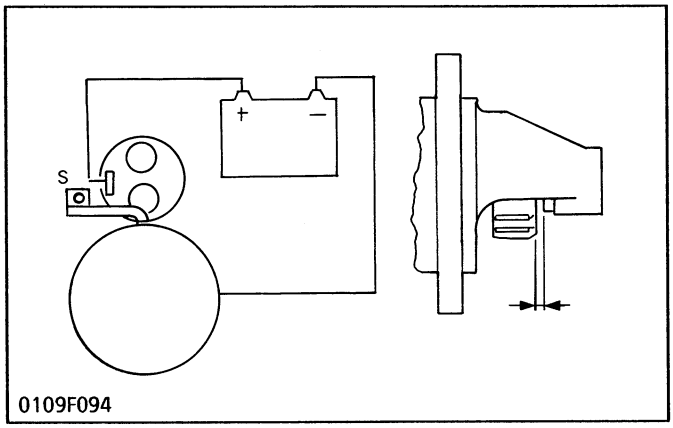

0109F094

Pinion Clearance

1. Reassemble the starter with connecting leads unconnected.
2. Connect a cable from the negative terminal of the battery to the starter body and a cable from **"S"** terminal of the starter to the positive terminal of the battery to force out the pinion.
3. Push back the pinion slightly to kill the play, and measure the pinion clearance.
4. If the clearance is not within the specified values, add or remove the washer between the solenoid switch and front end frame.

Pinion clearance	Factory spec.	0.5 to 2.0 mm 0.020 to 0.079 in.

EDITOR:
KUBOTA FARM & INDUSTRIAL MACHINERY SERVICE, LTD.
64, ISHIZU-KITAMACHI, SAKAI-CITY, OSAKA, JAPAN
PHONE : (81)72-241-1129
FAX : (81)72-245-2484
E-mail : ksos-pub@kubota.co.jp

KUBOTA Corporation

Printed in Japan 2003. 06, S, EI, EI, e Code No.97897-02400
2003. 05, S, EI, EI, e