SERVICE MANUAL SECTION

CAB: 5000*i* AND 9000*i* CONVENTIONAL

Model: 5500i

Model: 5600i

Model: 5900i

Model: 9100i

Model: 9200i

Model: 9400i

Model: 9900i

Model: 9900ix

S16021

06/07/2005

Copyright © 06/07/2005 International Truck and Engine Corporation

Table of Contents

1. DESCRIPTION.....1
1.1. VEHICLE IDENTIFICATION NUMBER (VIN) TAG LOCATION.....3
1.2. CAB AIR SUSPENSION SYSTEM.....3
1.3. ELECTRIC WINDSHIELD WIPERS AND WING PANEL MOUNTED SWITCHES.....3
1.4. WINDSHIELD WASHERS.....4

2. OPERATION.....4
2.1. ELECTRIC WINDSHIELD WIPERS AND WING PANEL MOUNTED SWITCHES.....4
2.2. WING PANEL MOUNTED WINDSHIELD WASHER CONTROLS.....4

3. MAINTENANCE.....4
3.1. WINDSHIELD WASHER.....4
3.2. CAB MOUNTING HARDWARE.....4
3.3. CAB AIR SUSPENSION FASTENERS AND AIR LINE FITTINGS.....4

4. REMOVE.....5
4.1. REMOVE ONE PIECE ENCAPSULATED WINDSHIELD.....5
4.2. REMOVE TWO PIECE ENCAPSULATED WINDSHIELD.....12
4.3. REMOVE REAR WINDOW GLASS AND WEATHER SEAL (EXCEPT SLEEPER MODELS)...16
4.4. HOOD SEALS.....17
Remove Hood Seals for 5000*i* and 9000*i* Series.....17
Remove Hood Seals for 5000*i* SBA Series with Optional Butterfly Hood.....17
4.5. REMOVE SUN SHADE.....20
4.6. REMOVE SUN VISOR.....21
4.7. IGNITION KEY SWITCH CYLINDER.....22
4.8. INSTRUMENT PANEL.....26
Remove Electrically Operated Gauges, Mechanical Air Gauges and Speedometer/Tachometer.....26
4.9. REMOVE FLOOR MAT.....28
4.10. REMOVE HEADLINER (DAY CAB MODELS ONLY).....28
4.11. REMOVE DRIVER AND PASSENGER SEATS.....30
4.12. BACK PANEL.....32
4.13. REMOVE ENGINE COVER.....33
4.14. CAB DOOR LOWER TRIM PANEL.....35
Remove Driver Side Cab Door Lower Trim Panel.....35
Remove Passenger Side Cab Door Lower Trim Panel.....36
4.15. CAB DOOR COURTESY LIGHT ASSEMBLY.....38
Remove Driver Side Cab Door Courtesy Light Assembly.....38
Remove Passenger Side Cab Door Courtesy Light Assembly.....38
4.16. UPPER DOOR TRIM/INNER DOOR PANEL AND WINDOW REGULATOR ASSEMBLY.....38
Remove Driver Side Upper Door Trim/Inner Door Panel and Window Regulator Assembly.....38
Remove Passenger Side Upper Door Trim/Inner Door Panel and Window Regulator Assembly.....46
4.17. CAB DOOR AND HINGE.....54
Remove Driver Side Cab Door.....54
Remove Driver Side Cab Door Hinge.....56

Remove Passenger Side Cab Door....57
Remove Passenger Side Cab Door Hinge....59
4.18. INNER DOOR HANDLE....59
Remove Driver Side Inner Door Handle....59
Remove Passenger Side Inner Door Handle....60
4.19. CAB DOOR GRAB HANDLE....61
Remove Driver Side Cab Door Grab Handle....61
Remove Passenger Side Cab Door Grab Handle....62
4.20. ELECTRIC WINDOW AND/OR ELECTRIC DOOR LOCK SWITCH ASSEMBLY....63
Remove Driver Side Electric Window and/or Electric Door Lock Switch Assembly....63
Remove Passenger Side Electric Window and/or Electric Door Lock Switch Assembly....64
4.21. UPPER DOOR TRIM PANEL....66
Remove Driver Side Upper Door Trim Panel....66
Remove Passenger Side Upper Door Trim Panel....66
4.22. WINDOW REGULATOR ASSEMBLY....67
Remove Driver Side Electric Window Regulator Assembly with Power Window Motor....67
Remove Passenger Side Electric Window Regulator Assembly with Power Window Motor....68
Remove Driver Side Manual Window Regulator Assembly....70
Remove Passenger Side Manual Window Regulator Assembly....75
4.23. CAB DOOR WINDOW GLASS AND FRONT RUN CHANNEL....80
Remove Driver Side Cab Door Window Glass and Front Run Channel....80
Remove Passenger Side Cab Door Window Glass and Front Run Channel....82
4.24. REMOVE CAB DOOR LATCH ASSEMBLY....85
4.25. REMOVE CAB DOOR STRIKER PIN....87
4.26. REMOVE DOOR LOCK ASSEMBLY....88
4.27. REMOVE OUTER DOOR HANDLE....90
4.28. REMOVE CAB DOOR OPENING SEALS....91
4.29. ELECTRIC WINDSHIELD WIPER SWITCHES....91
Remove Wiper/Washer Control Switches and Indicator Lights....92
4.30. REMOVE WINDSHIELD WIPER ARM AND BLADE ASSEMBLY....92
4.31. REMOVE COWL TRAY....94
4.32. REMOVE AIR DUCT INLET....98
4.33. WINDSHIELD WIPER MOTOR, BRACKET AND LINKAGE ASSEMBLY....99
Remove Windshield Wiper Motor, Bracket and Linkage Assembly on Vehicles before 2002 Engines before May 2001....99
Remove Windshield Wiper Motor, Bracket and Linkage Assembly on Vehicles with 2002 Engines after May 2001....102
Remove Windshield Wiper Motor, Bracket and Linkage Assembly on Vehicles with 2002 Engines after January 2005....104
4.34. WIPER MOTOR....106
Remove Wiper Motor on Vehicles before 2002 Engines and after 2002 Engines before January 2005....106
Remove Wiper Motor with Electrical Connector part of Pig-Tail Wiring Harness on Vehicles with 2002 Engines after January 2005....107
Remove Wiper Motor with Electrical Connector as part of Wiper Motor on Vehicles with 2002 Engines after January 2005....110
4.35. REMOVE WASHER RESERVOIR/PUMP MOTOR ASSEMBLY....112
4.36. REMOVE WASHER RESERVOIR PUMP MOTOR — ELECTRIC....112
4.37. CAB....113
General Guidelines For Removal....113

Remove SBA and SFA Cab for 5000*i* Series with Rear Hard Mount before November 1999.....114
Remove SBA and SFA Cab for 5000*i* Series with Rear Hard Mount after November 1999.....116
Remove Front Cab Mounting Insulator for SBA and SFA 5000*i* Series with Rear Hard Mount after November 1999.....118
Remove SBA Cab for 5000*i* Series with Rear Cab Air Suspension System after August 1994 and SFA Cab for 5000*i* Series with Rear Cab Air Suspension System after August 1996.....118
Remove Front Cab Mounting Insulator for SBA Cab for 5000*i* Series with Rear Cab Air Suspension System after August 1994 and SFA Cab for 5000*i* Series with Rear Cab Air Suspension System after August 1996.....121
Remove Day Cab for 9100*i*, 9200*i*, 9400*i* and 9900*i* Models with Rear Hard Mount.....121
Remove Front Cab Mounting Insulator on Day Cab for 9100*i*, 9200*i*, 9400*i* and 9900*i* Models with Rear Hard Mount.....123
Remove Day Cab for 9200*i* Models with Detroit Diesel Engines and with Rear Cab Air Suspension System before January 1997.....123
Remove Front Cab Mounting Insulator on Day Cab for 9200*i* Models with Detroit Diesel Engines and with Rear Cab Air Suspension System before January 1997.....126
Remove Day Cab for 9100*i* and 9200*i* Models without Detroit Diesel Engines and with Rear Cab Air Suspension System after January 1997.....126
Remove Front Cab Mounting Insulator on Day Cab for 9100*i* and 9200*i* Models without Detroit Diesel Engines and with Rear Cab Air Suspension System after January 1997.....127
Remove Day Cab for 9200*i*Models with Detroit Diesel Engines and with Rear Cab Air Suspension System before March 1997.....127
Remove Front Cab Mounting Insulator on Day Cab for 9200*i* Models with Detroit Diesel Engines and with Rear Cab Air Suspension System before March 1997.....129
Remove Day Cab for 9100*i* and 9200*i* Models without Detroit Diesel Engines and with Rear Cab Air Suspension System after March 1997.....129
Remove Front Cab Mounting Insulator on Day Cab for 9100*i* and 9200*i* Models without Detroit Diesel Engines and with Rear Cab Air Suspension System after March 1997.....130
Remove Day Cab with High Rise Crossmember for 9100*i*, 9200*i*, 9400*i* and 9900*i* Models with Rear Cab Air Suspension System after December 2001.....130
Remove Front Cab Mounting Insulator on Day Cab with High Rise Crossmember for 9100*i*, 9200*i*, 9400*i* and 9900*i* Models with Rear Cab Air Suspension System after December 2001.....132
Remove Day Cab with Standard 7 Piece Crossmember for 9400*i* and 9900*i* Models with Rear Cab Air Suspension System after December 2001.....132
Remove Front Cab Mounting Insulator on Day Cab with Standard 7 Piece Crossmember for 9400*i* and 9900*i* Models with Rear Cab Air Suspension System after December 2001.....135
Remove 51 Inch or 72 Inch Pro-Sleeper® Cab for 9200*i* and 9400*i* Models with Rear Cab Air Suspension System.....135
Remove Front Cab Mounting Insulator on 51 Inch or 72 Inch Pro-Sleeper® Cab for 9200*i* and 9400*i* Models with Rear Cab Air Suspension System.....138
Remove 51 Inch Pro-Sleeper® Cab for 9200*i*, 9400*i* and 9900*i* Models with Rear Cab Air Suspension System on Vehicles after April 2000.....138
Remove Front Cab Mounting Insulator on 51 Inch Pro-Sleeper® Cab for 9200*i*, 9400*i* and 9900*i* Models with Rear Cab Air Suspension System on Vehicles after April 2000.....141

Remove 72 Inch Pro-Sleeper® Cab for 9200*i*, 9400*i* and 9900*i* Models with Rear Cab Air Suspension System on Vehicles after April 2000.....141
Remove Front Cab Mounting Insulator on 72 Inch Pro-Sleeper® Cab for 9200*i*, 9400*i* and 9900*i* Models with Rear Cab Air Suspension System on Vehicles after April 2000.....144
4.38. CAB AIR RIDE SYSTEM FOR 9200*i*/9400*i*/9900*i* DAY CAB MODELS WITHOUT DETROIT DIESEL ENGINES BEFORE DECEMBER 2001.....144
Remove Cab Air Ride Shock Absorber.....146
Remove Cab Air Ride Air Springs (Bags).....147
Remove Track Bar Rod.....148
Remove Cab Air Ride Valve.....148
4.39. CAB AIR SUSPENSION SYSTEM FOR 9200*i*/9400*i*/9900*i* DAY CAB MODELS WITHOUT DETROIT DIESEL ENGINES AFTER DECEMBER 2001.....151
Remove Height Control Valve.....153
Remove Cab Air Suspension Shock Absorber.....155
Remove Cab Air Suspension Air Spring (Bag).....156
Remove Lateral Control Rod.....156
4.40. CAB AIR SUSPENSION SYSTEM FOR 9200*i* DAY CAB MODELS WITH DETROIT DIESEL ENGINES BEFORE JANUARY 1997.....157
Remove Height Control Valve.....159
Remove Cab Air Suspension Shock Absorber.....160
Remove Cab Air Suspension Air Spring (Bag).....161
Remove Lateral Control Rod.....161
4.41. CAB AIR SUSPENSION SYSTEM FOR 9100*i* AND 9200*i* DAY CAB MODELS AFTER JANUARY 1997.....162
Remove Height Control Valve.....162
Remove Cab Air Suspension Shock Absorber.....163
Remove Cab Air Suspension Air Spring (Bag).....163
Remove Lateral Control Rod.....164
4.42. CAB AIR SUSPENSION SYSTEM FOR 9200*i* DAY CAB MODELS WITH DETROIT DIESEL ENGINES BEFORE MARCH 1997.....164
Remove Height Control Valve.....166
Remove Cab Air Suspension Shock Absorber.....168
Remove Cab Air Suspension Air Spring (Bag).....168
Remove Lateral Control Rod.....168
4.43. CAB AIR SUSPENSION SYSTEM FOR 9100*i* AND 9200*i*DAY CAB MODELS AFTER MARCH 1997.....169
Remove Height Control Valve.....169
Remove Cab Air Suspension Shock Absorber.....170
Remove Cab Air Suspension Air Spring (Bag).....170
Remove Lateral Control Rod.....171
4.44. CAB AIR SUSPENSION SYSTEM FOR 9200*i*/9400*i*/9900*i* MODELS WITH PRO-SLEEPER® BEFORE APRIL 2000.....171
Remove Height Control Valve.....173
Remove Cab Air Suspension Shock Absorber.....174
Remove Cab Air Suspension Air Spring (Bag).....175
Remove Lateral Control Rod.....175
4.45. CAB AIR SUSPENSION SYSTEM FOR 9200*i*/9400*i*/9900*i* MODELS WITH PRO-SLEEPER® AFTER APRIL 2000.....176
Remove Height Control Valve.....178
Remove Cab Air Suspension Shock Absorber.....179
Remove Cab Air Suspension Air Spring (Bag).....180
Remove Lateral Control Rod.....181

4.46. CAB AIR SUSPENSION SYSTEM FOR 5000*i* SERIES BEFORE SEPTEMBER 1997.....181
Remove Height Control Valve.....183
Remove Cab Air Suspension Shock Absorber.....184
Remove Cab Air Suspension Air Spring (Bag).....185
Remove Lateral Control Rod.....185
4.47. CAB AIR SUSPENSION SYSTEM FOR 5000*i* SERIES AFTER SEPTEMBER 1997.....186
Remove Height Control Valve.....188
Remove Cab Air Suspension Shock Absorber.....191
Remove Cab Air Suspension Air Spring (Bag).....191
Remove Lateral Control Rod.....192
4.48. CAB AIR SUSPENSION SYSTEM FOR 5000*i* SERIES AFTER FEBRUARY 2001.....192
Remove Height Control Valve.....194
Remove Cab Air Suspension Shock Absorber.....195
Remove Cab Air Suspension Air Spring (Bag).....195
Remove Lateral Control Rod.....196

5. INSTALL.....197
5.1. ONE PIECE ENCAPSULATED WINDSHIELD.....197
Install One Piece Encapsulated Windshield using Two Part U216 Urethane Adhesive (adhesive A and curative B).....197
Install One Piece Encapsulated Windshield using One Part U400HV Urethane Adhesive.....217
5.2. TWO PIECE ENCAPSULATED WINDSHIELD.....222
Install Two Piece Encapsulated Windshield using Two Part U216 Urethane Adhesive (adhesive A and curative B).....223
Install Two Piece Encapsulated Windshield using One Part U400HV Urethane Adhesive.....237
5.3. INSTALL REAR WINDOW GLASS AND WEATHER SEAL (EXCEPT SLEEPER MODELS)...242
5.4. HOOD SEALS.....245
Install Hood Seals for 5000*i* and 9000*i* Series.....245
Install Hood Seals for 5000*i* SBA Series with Optional Butterfly Hood.....246
5.5. INSTALL SUN SHADE.....247
5.6. INSTALL SUN VISOR.....247
5.7. INSTALL IGNITION KEY SWITCH CYLINDER.....248
5.8. INSTRUMENT PANEL.....249
Install Electrically Operated Gauges, Mechanical Air Gauges and Speedometer/Tachometer.....249
5.9. INSTALL FLOOR MAT.....249
5.10. INSTALL HEADLINER (DAY CAB MODELS ONLY).....249
5.11. INSTALL DRIVER AND PASSENGER SEATS.....249
5.12. INSTALL BACK PANEL.....250
5.13. INSTALL ENGINE COVER.....250
5.14. CAB DOOR LOWER TRIM PANEL.....250
Install Driver Side Cab Door Lower Trim Panel.....250
Install Passenger Side Cab Door Lower Trim Panel.....251
5.15. CAB DOOR COURTESY LIGHT ASSEMBLY.....251
Install Driver Side Cab Door Courtesy Light Assembly.....251
Install Passenger Side Cab Door Courtesy Light Assembly.....251
5.16. UPPER DOOR TRIM/INNER DOOR PANEL AND WINDOW REGULATOR ASSEMBLY.....252
Install Driver Side Upper Door Trim/Inner Door Panel and Window Regulator Assembly.....252
Install Passenger Side Upper Door Trim/Inner Door Panel and Window Regulator Assembly.....253

5.17. CAB DOOR AND HINGE.....255
Install Driver Side Cab Door Hinge.....255
Install Driver Side Cab Door.....255
Install Passenger Side Cab Door Hinge.....256
Install Passenger Side Cab Door.....257
5.18. INNER DOOR HANDLE.....258
Install Driver Side Inner Door Handle.....258
Install Passenger Side Inner Door Handle.....258
5.19. CAB DOOR GRAB HANDLE.....258
Install Driver Side Cab Door Grab Handle.....258
Install Passenger Side Cab Door Grab Handle.....259
5.20. ELECTRIC WINDOW AND/OR ELECTRIC DOOR LOCK SWITCH ASSEMBLY.....259
Install Driver Side Electric Window and/or Electric Door Lock Switch Assembly.....259
Install Passenger Side Electric Window and/or Electric Door Lock Switch Assembly.....259
5.21. UPPER DOOR TRIM PANEL.....260
Install Driver Side Upper Door Trim Panel.....260
Install Passenger Side Upper Door Trim Panel.....260
5.22. WINDOW REGULATOR ASSEMBLY.....261
Install Driver Side Electric Window Regulator Assembly with Power Window Motor...261
Install Passenger Side Electric Window Regulator Assembly with Power Window Motor.....261
Install Driver Side Manual Window Regulator Assembly.....262
Install Passenger Side Manual Window Regulator Assembly.....264
5.23. CAB DOOR WINDOW GLASS AND FRONT RUN CHANNEL.....266
Install Driver Side Front Run Channel and Cab Door Window Glass.....266
Install Passenger Side Front Run Channel and Cab Door Window Glass.....267
5.24. INSTALL CAB DOOR LATCH ASSEMBLY.....268
5.25. INSTALL CAB DOOR STRIKER PIN.....269
5.26. INSTALL DOOR LOCK ASSEMBLY.....269
5.27. INSTALL OUTER DOOR HANDLE.....270
5.28. INSTALL CAB DOOR OPENING SEALS.....271
5.29. ELECTRIC WINDSHIELD WIPER SWITCHES.....271
Install Wiper/Washer Control Switches and Indicator Lights.....271
5.30. INSTALL WINDSHIELD WIPER ARM AND BLADE ASSEMBLY.....271
5.31. COWL TRAY.....271
5.32. AIR DUCT INLET.....273
5.33. WINDSHIELD WIPER MOTOR, BRACKET AND LINKAGE ASSEMBLY.....275
Install Windshield Wiper Motor, Bracket and Linkage Assembly on Vehicles before 2002 Engines before May 2001.....275
Install Windshield Wiper Motor, Bracket and Linkage Assembly on Vehicles with 2002 Engines after May 2001.....275
Install Windshield Wiper Motor, Bracket and Linkage Assembly on Vehicles with 2002 Engines after January 2005.....276
5.34. WIPER MOTOR.....276
Install Wiper Motor on Vehicles before 2002 Engines and after 2002 Engines before January 2005.....276
Install Wiper Motor with Electrical Connector part of Pig-Tail Wiring Harness on Vehicles with 2002 Engines after January 2005.....277
Install Wiper Motor with Electrical Connector as part of Wiper Motor on Vehicles with 2002 Engines after January 2005.....278
5.35. INSTALL WASHER RESERVOIR/PUMP MOTOR ASSEMBLY.....279
5.36. INSTALL WASHER RESERVOIR PUMP MOTOR — ELECTRIC.....279

5.37. CAB.....279
Install SBA and SFA Cab for 5000*i* Series with Rear Hard Mount before November 1999.....279
Install Front Cab Mounting Insulator for SBA and SFA 5000*i* Series with Rear Hard Mount after November 1999.....280
Install SBA and SFA Cab for 5000*i* Series with Rear Hard Mount after November 1999.....280
Install Front Cab Mounting Insulator for SBA Cab for 5000*i* Series with Rear Cab Air Suspension System after August 1994 and SFA Cab for 5000*i* Series with Rear Cab Air Suspension System after August 1996.....281
Install SBA Cab for 5000*i* Series with Rear Cab Air Suspension System after August 1994 and SFA Cab for 5000*i* Series with Rear Cab Air Suspension System after August 1996.....281
Install Front Cab Mounting Insulator on Day Cab for 9100*i*, 9200*i*, 9400*i* and 9900*i* Models with Rear Hard Mount.....282
Install Day Cab for 9100*i*, 9200*i*, 9400*i* and 9900*i* Models with Rear Hard Mount.....282
Install Front Cab Mounting Insulator on Day Cab for 9200*i* Models with Detroit Diesel Engines and with Rear Cab Air Suspension System before January 1997.....283
Install Day Cab for 9200*i* Models with Detroit Diesel Engines and with Rear Cab Air Suspension System before January 1997.....283
Install Front Cab Mounting Insulator on Day Cab for 9100*i* and 9200*i* Models without Detroit Diesel Engines and with Rear Cab Air Suspension System after January 1997.....284
Install Day Cab for 9100*i* and 9200*i* Models without Detroit Diesel Engines and with Rear Cab Air Suspension System after January 1997.....284
Install Front Cab Mounting Insulator on Day Cab for 9200*i* Models with Detroit Diesel Engines and with Rear Cab Air Suspension System before March 1997.....285
Install Day Cab for 9200*i*Models with Detroit Diesel Engines and with Rear Cab Air Suspension System before March 1997.....285
Install Front Cab Mounting Insulator on Day Cab for 9100*i* and 9200*i* Models without Detroit Diesel Engines and with Rear Cab Air Suspension System after March 1997.....286
Install Day Cab for 9100*i* and 9200*i* Models without Detroit Diesel Engines and with Rear Cab Air Suspension System after march 1997.....286
Install Front Cab Mounting Insulator on Day Cab with High Rise Crossmember for 9100*i*, 9200*i*, 9400*i* and 9900*i* Models with Rear Cab Air Suspension System after December 2001.....286
Install Day Cab with High Rise Crossmember for 9100*i*, 9200*i*, 9400*i* and 9900*i* Models with Rear Cab Air Suspension System after December 2001.....287
Install Front Cab Mounting Insulator on Day Cab with Standard 7 Piece Crossmember for 9400*i* and 9900*i* Models with Rear Cab Air Suspension System after December 2001.....287
Install Day Cab with Standard 7 Piece Crossmember for 9400*i* and 9900*i* Models with Rear Cab Air Suspension System after December 2001.....288
Install Front Cab Mounting Insulator on 51 Inch or 72 Inch Pro-Sleeper® Cab for 9200*i* and 9400*i* Models with Rear Cab Air Suspension System.....288
Install 51 Inch or 72 Inch Pro-Sleeper® Cab for 9200*i* and 9400*i* Models with Rear Cab Air Suspension System.....289
Install Front Cab Mounting Insulator on 51 Inch Pro-Sleeper® Cab for 9200*i*, 9400*i* and 9900*i* Models with Rear Cab Air Suspension System on Vehicles after April 2000.....289
Install 51 Inch Pro-Sleeper® Cab for 9200*i*, 9400*i* and 9900*i* Models with Rear Cab Air Suspension System on Vehicles after April 2000.....289

Install Front Cab Mounting Insulator on 72 Inch Pro-Sleeper® Cab for 9200*i*, 9400*i* and 9900*i* Models with Rear Cab Air Suspension System on Vehicles after April 2000.....290
Install 72 Inch Pro-Sleeper® Cab for 9200*i*, 9400*i* and 9900*i* Models with Rear Cab Air Suspension System on Vehicles after April 2000.....290
General Guidelines For Installation.....291
Paint as Required.....292
Reinstall Related Components.....292
5.38. CAB AIR RIDE SYSTEM FOR 9200*i*/9400*i*/9900*i* DAY CAB MODELS WITHOUT DETROIT DIESEL ENGINES BEFORE DECEMBER 2001.....292
Install Cab Air Ride Shock Absorber.....292
Install Cab Air Ride Air Springs (Bags).....293
Install Track Bar Rod.....294
Install Cab Air Ride Valve.....294
5.39. CAB AIR SUSPENSION SYSTEM FOR 9200*i*/9400*i*/9900*i* DAY CAB MODELS WITHOUT DETROIT DIESEL ENGINES AFTER DECEMBER 2001.....295
Install Height Control Valve.....296
Install Cab Air Suspension Shock Absorber.....297
Install Cab Air Ride Air Spring (Bag).....297
Install Lateral Control Rod.....298
5.40. CAB AIR SUSPENSION SYSTEM FOR 9200*i* DAY CAB MODELS WITH DETROIT DIESEL ENGINES BEFORE JANUARY 1997.....298
Install Height Control Valve.....298
Install Cab Air Suspension Shock Absorber.....299
Install Cab Air Suspension Air Spring (Bag).....299
Install Lateral Control Rod.....300
5.41. CAB AIR SUSPENSION SYSTEM FOR 9100*i* AND 9200*i* DAY CAB MODELS AFTER JANUARY 1997.....300
Install Height Control Valve.....301
Install Cab Air Suspension Shock Absorber.....301
Install Cab Air Suspension Air Spring (Bag).....302
Install Lateral Control Rod.....302
5.42. CAB AIR SUSPENSION SYSTEM FOR 9200*i* DAY CAB MODELS WITH DETROIT DIESEL ENGINES BEFORE MARCH 1997.....303
Install Height Control Valve.....303
Install Cab Air Suspension Shock Absorber.....304
Install Cab Air Suspension Air Spring (Bag).....304
Install Lateral Control Rod.....305
5.43. CAB AIR SUSPENSION SYSTEM FOR 9100*i* AND 9200*i*DAY CAB MODELS AFTER MARCH 1997.....305
Install Height Control Valve.....305
Install Cab Air Suspension Shock Absorber.....306
Install Cab Air Suspension Air Spring (Bag).....307
Install Lateral Control Rod.....307
5.44. CAB AIR SUSPENSION SYSTEM FOR 9200*i*/9400*i*/9900*i* MODELS WITH PRO-SLEEPER® BEFORE APRIL 2000.....307
Install Height Control Valve.....308
Install Cab Air Suspension Shock Absorber.....309
Install Cab Air Suspension Air Spring (Bag).....309
Install Lateral Control Rod.....310
5.45. CAB AIR SUSPENSION SYSTEM FOR 9200*i*/9400*i*/9900*i* MODELS WITH PRO-SLEEPER® AFTER APRIL 2000.....310
Install Height Control Valve.....310

Install Cab Air Suspension Shock Absorber....311
Install Cab Air Suspension Air Spring (Bag)....311
Install Lateral Control Rod....312
5.46. CAB AIR SUSPENSION SYSTEM FOR 5000/ SERIES BEFORE SEPTEMBER 1997....312
Install Height Control Valve....313
Install Cab Air Suspension Shock Absorber....313
Install Cab Air Suspension Air Spring (Bag)....314
Install Lateral Control Rod....315
5.47. CAB AIR SUSPENSION SYSTEM FOR 5000/ SERIES AFTER SEPTEMBER 1997....315
Install Height Control Valve....315
Install Cab Air Suspension Shock Absorber....316
Install Cab Air Suspension Air Spring (Bag)....317
Install Lateral Control Rod....317
5.48. CAB AIR SUSPENSION SYSTEM FOR 5000/ SERIES AFTER FEBRUARY 2001....318
Install Height Control Valve....318
Install Cab Air Suspension Shock Absorber....319
Install Cab Air Suspension Air Spring (Bag)....319
Install Lateral Control Rod....320

6. 5000/ SERIES VEHICLES WITH F.W.P.T.O....320
6.1. ENGINE COVER ACCESS DOOR FOR VEHICLES WITH F.W.P.T.O....320

7. TROUBLESHOOTING....321
7.1. ELECTRIC WIPERS....321
7.2. WASHER PUMP....322
7.3. CAB AIR SUSPENSION SYSTEM FOR 5000/ SERIES....323

8. ADJUSTMENTS....323
8.1. CAB SQUARING....323
8.2. CAB AIR RIDE SYSTEM FOR 9200//9400//9900/ DAY CAB MODELS WITHOUT DETROIT DIESEL ENGINES BEFORE DECEMBER 2001....325
8.3. CAB AIR SUSPENSION SYSTEM FOR 9200//9400//9900/ DAY CAB MODELS WITHOUT DETROIT DIESEL ENGINES AFTER DECEMBER 2001....326
8.4. CAB AIR SUSPENSION SYSTEM FOR 9200/ DAY CAB MODELS WITH DETROIT DIESEL ENGINES BEFORE JANUARY 1997....328
8.5. CAB AIR SUSPENSION SYSTEM FOR 9100/ AND 9200/ DAY CAB MODELS AFTER JANUARY 1997....330
8.6. CAB AIR SUSPENSION SYSTEM FOR 9200/ DAY CAB MODELS WITH DETROIT DIESEL ENGINES BEFORE MARCH 1997....331
8.7. CAB AIR SUSPENSION SYSTEM FOR 9100/ AND 9200/ DAY CAB MODELS AFTER MARCH 1997....334
8.8. CAB AIR SUSPENSION SYSTEM FOR 9200//9400//9900/ MODELS WITH PRO-SLEEPER® BEFORE APRIL 2000....334
8.9. CAB AIR SUSPENSION SYSTEM FOR 9200//9400//9900/ MODELS WITH PRO-SLEEPER® AFTER APRIL 2000....337
8.10. CAB AIR SUSPENSION SYSTEM FOR 5000/ SERIES BEFORE SEPTEMBER 1997....340
8.11. CAB AIR SUSPENSION SYSTEM FOR 5000/ SERIES AFTER SEPTEMBER 1997....341
8.12. CAB AIR SUSPENSION SYSTEM FOR 5000/ SERIES AFTER FEBRUARY 2001....342
8.13. HOOD....343
8.14. CAB DOOR HINGE....343
8.15. CAB DOOR STRIKER PIN AT LOCK PILLAR....343
8.16. WINDSHIELD WIPER ARM AND BLADE ASSEMBLY....343

9. FORMS……344
9.1. BONDED WINDSHIELD REPLACEMENT REPORT……344

10. TORQUE……346
10.1. TORQUE CHART……346

SPECIAL SERVICE TOOLS……364

1. DESCRIPTION

The cab for 5000*i* and 9000*i* Series premium conventional tractors and 9000*i* Series Pro Sleeper® models is made of aluminum to resist corrosion and to reduce vehicle weight (Figure 1). Riveted construction adds strength and improves repairability over the 100% welded cabs. Structural sealers increase joint strength.

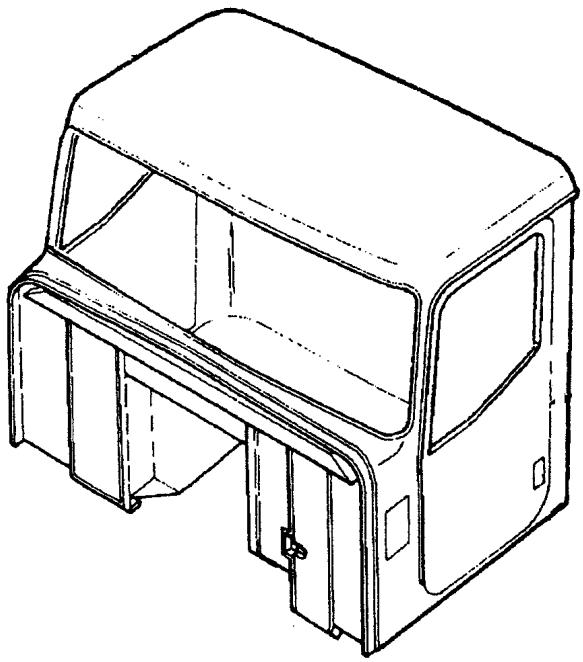

Figure 1 5000*i* and 9000*i* Series Conventional Cab

The combination of riveted construction and adhesive sealers provides a much tighter fitting cab than conventional welded steel, and eliminates air leaks, reduces road noise and improves driver comfort.

Figure 2 shows day cab and Pro Sleeper® cab models. The Pro Sleeper® has two different cab sizes, the 112 inch (51 inch sleeper) and the 120 inch (72 inch sleeper) BBC (bumper to back of cab). The Pro Sleeper® also has three different roof designs: the Low Roof design, Hi-Rise design and the Sky-Rise design.

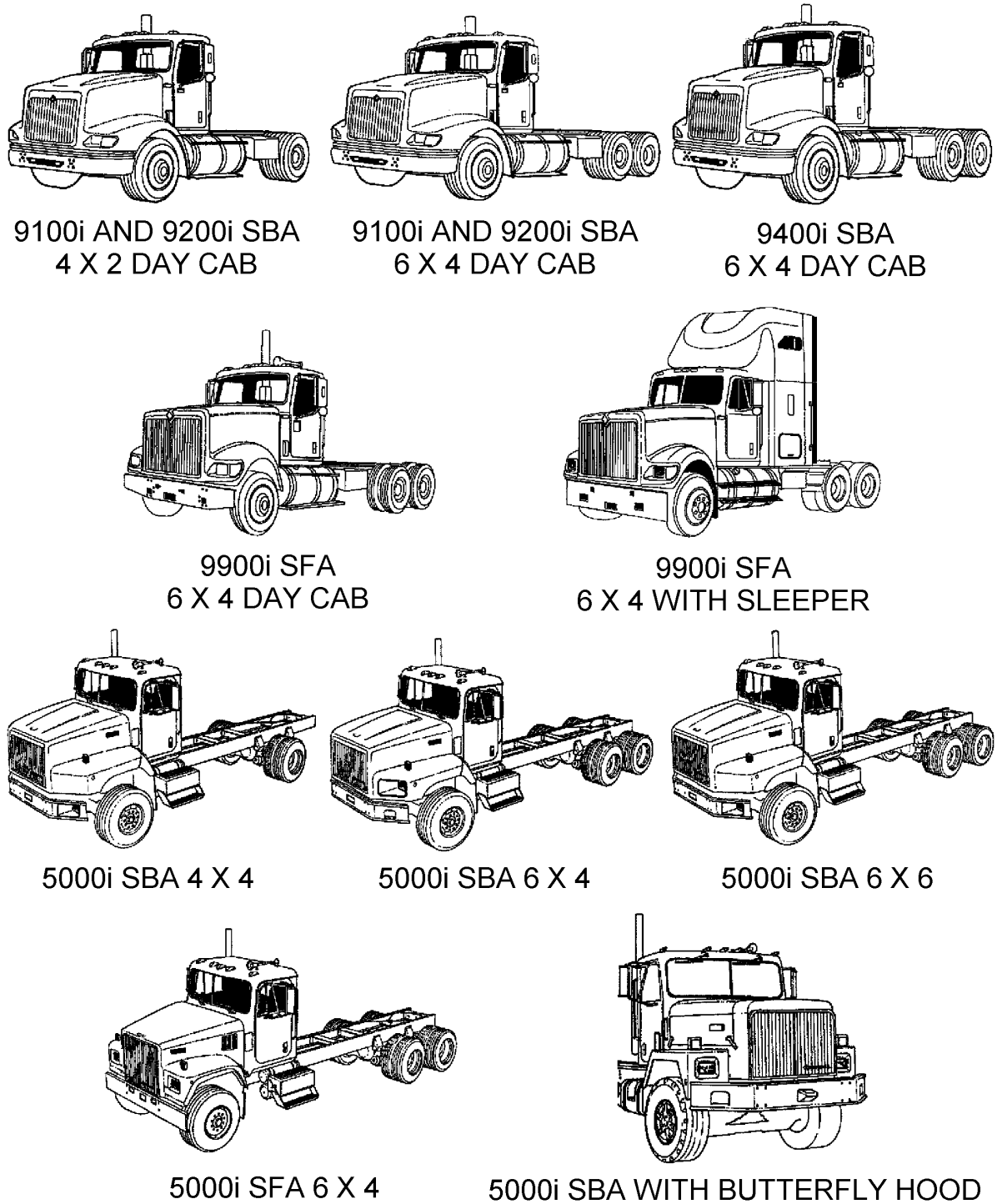

Figure 2 5000*i* and 9000*i* Series Cabs

1.1. VEHICLE IDENTIFICATION NUMBER (VIN) TAG LOCATION

Have the VIN conveniently at hand when you service the vehicle and need service parts. The cab and chassis VIN(s) are stamped on the serial tags located on the face of the cab door opening pillar, driver's side (Figure 3).

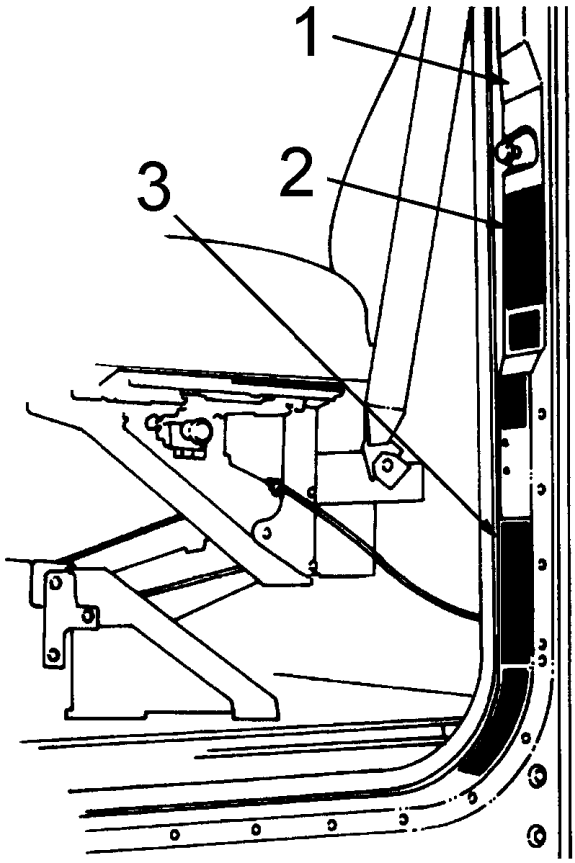

Figure 3 VIN Tag Location

1. CAB DOOR OPENING PILLAR
2. CAB "VIN" TAG
3. CHASSIS "VIN" TAG

1.2. CAB AIR SUSPENSION SYSTEM

The cab air suspension system on International vehicles contains one or two air springs (bags), two shock absorbers, and is controlled by the cab air ride valve.

The cab air ride valve is preset at the factory and under normal conditions does not have to be adjusted. However, there is an adjustment procedure for service when needed.

1.3. ELECTRIC WINDSHIELD WIPERS AND WING PANEL MOUNTED SWITCHES

Electric wipers are cowl mounted and the wiper/washer switches for the 5000*i* and 9000*i* Series vehicles are located on the wing panel of the instrument panel to the right of the driver.

1.4. WINDSHIELD WASHERS

The windshield washers have an integral reservoir and electric pump assembly mounted inside the engine compartment on the right cab bulkhead. The washer nozzles are mounted directly on the wiper arms, commonly referred to as wet arms.

2. OPERATION

2.1. ELECTRIC WINDSHIELD WIPERS AND WING PANEL MOUNTED SWITCHES

The electric wiper/washer switches for the 5000*i* and 9000*i* Series vehicles are located on the wing panel of the instrument panel to the right of the driver.

Use the wiper speed control rocker switch to start and stop the wiper-only function and to control wiper speed, HIGH or LOW.

Use the intermittent operation/washer control sliding (rheostat) switch to control intermittent wiper operation, and to operate the windshield washer.

2.2. WING PANEL MOUNTED WINDSHIELD WASHER CONTROLS

The control for the windshield washers is a combination intermittent wiper operation/washer control sliding (rheostat) switch.

Operate the washers on both wiper arms simultaneously by sliding the slide lever to the washer position. The washers and wipers operate, then shut off automatically.

3. MAINTENANCE

3.1. WINDSHIELD WASHER

A minimum of service is required to keep the windshield washer operating. Keep reservoir filled with windshield washer solvent and keep wiper nozzles clean. If dirt enters the reservoir, remove reservoir and flush out with clean water. Refill reservoir with specified solvent after reinstalling.

3.2. CAB MOUNTING HARDWARE

Periodically check tightness of all cab mounting hardware at front cab mount and rear cab mount. Refer to the **TORQUE CHART** for proper tightening of all front and rear cab mounting hardware.

3.3. CAB AIR SUSPENSION FASTENERS AND AIR LINE FITTINGS

Periodically check tightness of all fasteners and air line fitting connections. Refer to the **TORQUE CHART** for proper tightening of all fasteners and air line fitting connections.

4. REMOVE

4.1. REMOVE ONE PIECE ENCAPSULATED WINDSHIELD

Refer to Figure 4 for Items in parentheses.

The 5000*i* Series and 9000*i* Series vehicles come standard with a one piece encapsulated windshield (Item 1). A two piece encapsulated windshield (Item 2) is available as an option.

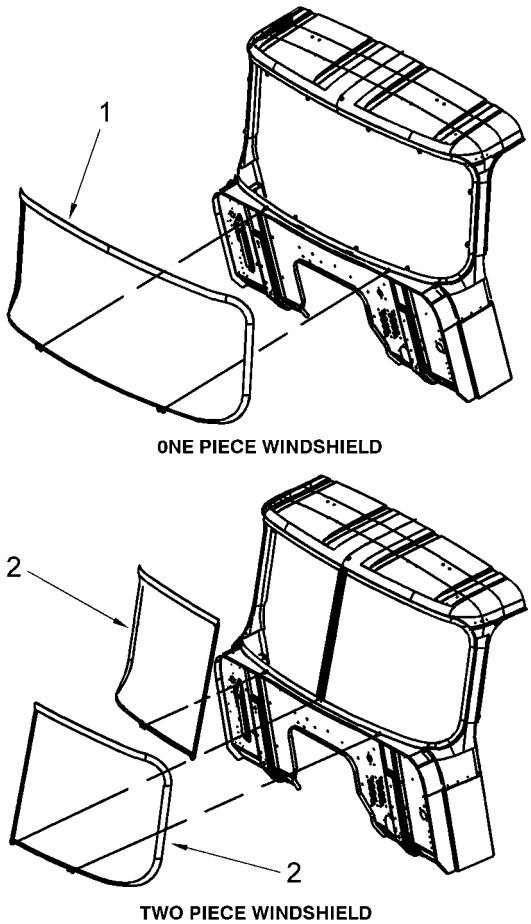

Figure 4 One and Two Piece Encapsulated Windshield

1. ONE PIECE ENCAPSULATED WINDSHIELD
2. TWO PIECE ENCAPSULATED WINDSHIELD/EXTERIOR CENTER TRIM STRIP

IMPORTANT – To remove a one piece encapsulated windshield you will need to have the INTERNATIONAL® Bonded Windshield Tool Kit ZTSE4470. This kit has a tool box that includes the tools required to remove and install bonded windshields. To order, call toll free in U. S. and Canada 1–800–520–2584 or Fax 1–800–578–7375. **NOTE — The INTERNATIONAL® Bonded Windshield Tool Kit ZTSE4470 is no longer available through the INTERNATIONAL® tool supplier. For materials that are available contact INTERNATIONAL® service parts.**

NOTE – Before starting to remove and replace a windshield, it is required that a self-carboning form from INTERNATIONAL® titled "Bonded Windshield Replacement Report" be filled out completely to confirm the condition of the vehicle and record the lot numbers of the Essex® materials used before starting the work. Refer to Figure 183 (See Figure 183, page 345) for a sample form at the back of this Manual.

1. Chock the wheels and unlatch fiberglass tilt hood on both sides and raise hood to full open position.

2. Place protective coverings over areas near windshield.

3. Before removing windshield, it will be necessary to remove the windshield wiper arms and blades. Refer to **WINDSHIELD WIPER ARM AND BLADE ASSEMBLY** (See Remove WINDSHIELD WIPER ARM AND BLADE ASSEMBLY, page 92)**, Remove Windshield Wiper Arm and Blade Assembly**.

Refer to Figure 5 for Items in parentheses.

4. If the unit is equipped with an exterior sun shade (Item 1) place a piece of tape (Item 2) on bottom side of the three sun shade mounting brackets (Item 3). This will protect sun shade mounting bracket paint while using cutting tool to remove windshield. If it is desired to remove the sun shade, refer to **SUN SHADE** (See Remove SUN SHADE, page 20)**, Remove Sun Shade for 5000*i* or 9000*i* Series** as required.

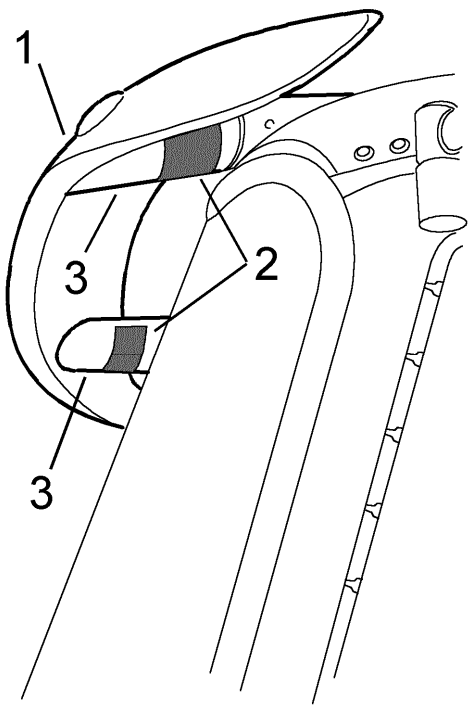

Figure 5 Taping Sun Shade Mounting Brackets

1. SUN SHADE
2. TAPE
3. SUN SHADE MOUNTING BRACKET

5. Remove one piece encapsulated windshield as follows.

Refer to Figure 6 (See Figure 6, page 8) for all Items in parentheses.

6. Remove four fastener covers (Item 1) from driver side A pillar trim panel (Item 2), then remove four torx self-drilling screws (Item 3) and remove driver side A pillar trim panel. Lay out of the way and save for reinstallation.

7. Remove two fastener covers (Item 4) from two upper fasteners only on passenger side A pillar trim panel (Item 5), then remove three torx self-drilling screws (Item 6). Note that the bottom torx self-drilling screw (Item 6) goes through the inner side cab trim panel. Use blunt tip screwdriver to pry the side cab trim panel out slightly to remove passenger side A pillar trim panel. Lay out of the way and save for reinstallation.

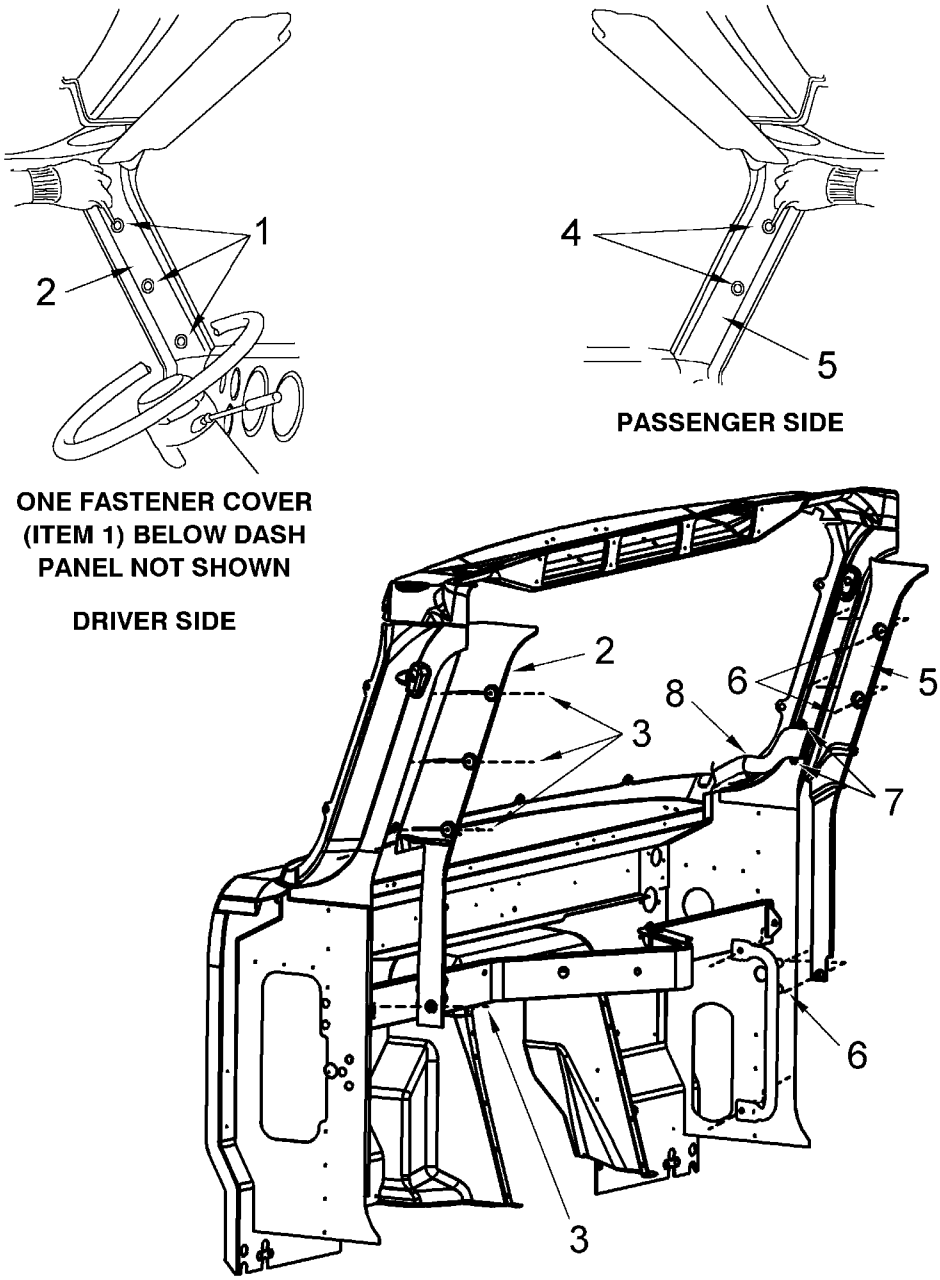

Figure 6 Driver and Passenger Side A Pillar Trim Panel

1. FASTENER COVER
2. DRIVER SIDE A PILLAR TRIM PANEL
3. TORX SELF-DRILLING SCREW, NO. 8 X 1
4. FASTENER COVER
5. PASSENGER SIDE A PILLAR TRIM PANEL
6. TORX SELF-DRILLING SCREW, NO. 8 X 1
7. TORX SELF-DRILLING SCREW
8. SIDE WINDOW DEMIST DUCT WITH RUBBER TUBE

Refer to Figure 7 for all Items in parentheses.

8. Remove ten torx pan head screws (Item 1) from each half of the defroster duct cover panel (Item 2) and remove both halves of the defroster duct cover panels. Lay out of the way and save for reinstallation.

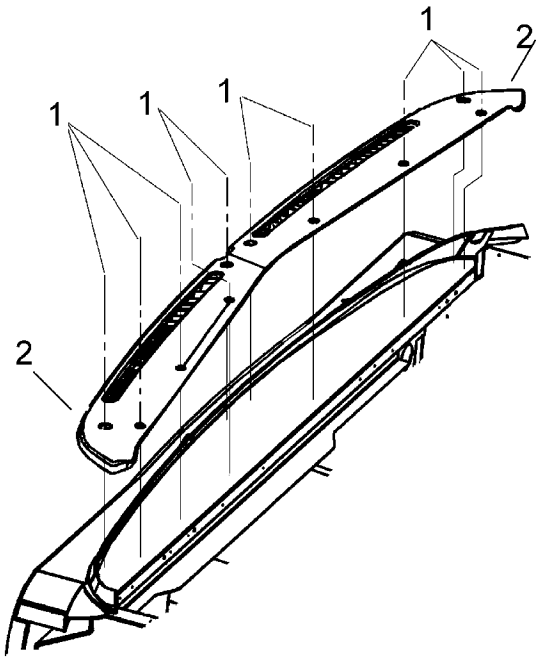

Figure 7 Defroster Duct Cover Panel

1. TORX PAN HEAD SCREW, 10–24 X 7/8
2. DEFROSTER DUCT COVER PANEL

9. Once passenger side A pillar (Item 5, Figure 6) and defroster duct cover panels (Item 2, Figure 7) are removed, remove two torx self-drilling screws (Item 7, Figure 6) from passenger side window demist duct with rubber tube (Item 8, Figure 6) and remove them. Lay out of the way and save for reinstallation.

WARNING – To avoid personal injury, wear protective eye wear and work gloves when removing windshield.

Refer to Figure 8 for all Items in parentheses.

10. Using a utility knife (Item 1) lift outer flange of encapsulation rubber trim (Item 2) and cut encapsulation rubber trim flange off all the way around windshield.

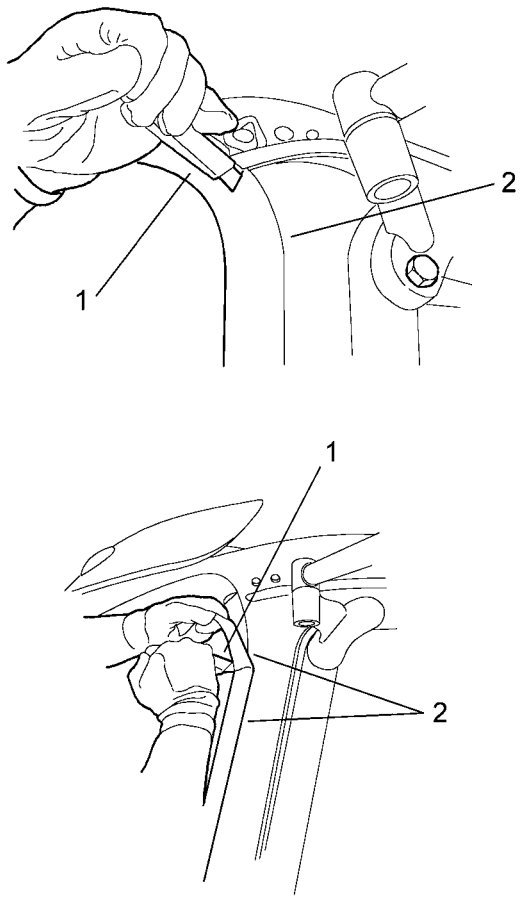

Figure 8 Cutting Rubber Trim Flange Off

1. UTILITY KNIFE
2. ENCAPSULATION RUBBER TRIM

Refer to Figure 9 for all Items in parentheses.

NOTE – When using a power knife to cut around the old windshield, use a spray bottle and lubricate the cutting area with water. This will prevent burning of the urethane and re-bonding of the windshield.

11. Using a power knife (Item 1) with outside cutting blade (Item 2) and/or inside cutting blade (Item 3), cut all the way around windshield until it is able to be lifted off the cab windshield fence. If necessary use a long handle utility knife (Item 4) to cut through adhesive if windshield will not lift off cab windshield fence.

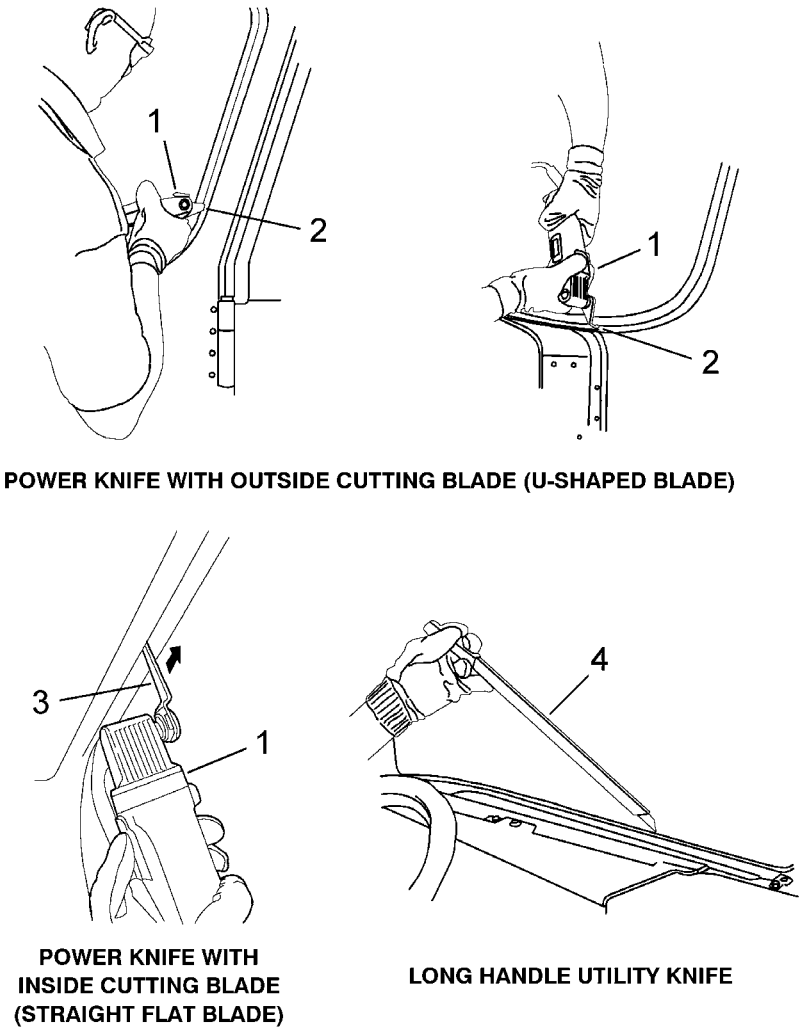

Figure 9 Cutting Windshield Out

1. POWER KNIFE
2. OUTSIDE CUTTING BLADE
3. INSIDE CUTTING BLADE
4. LONG HANDLE UTILITY KNIFE

12. Once the windshield (Item 1, Figure 10) is cut free from cab windshield fence, lift it off the cab. Place windshield out of the way.

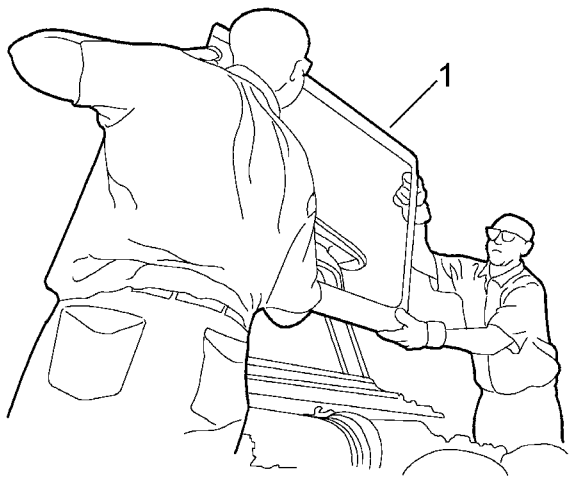

ONE PIECE WINDSHIELD

Figure 10 Removing Windshield from Vehicle

1. WINDSHIELD

4.2. REMOVE TWO PIECE ENCAPSULATED WINDSHIELD

Refer to Figure 4 (See Figure 4, page 5) for Items in parentheses.

The 5000*i* Series and 9000*i* Series vehicles come standard with a one piece encapsulated windshield (Item 1). A two piece encapsulated windshield (Item 2) is available as an option.

IMPORTANT – To remove a two piece encapsulated windshield you will need to have the INTERNATIONAL® Bonded Windshield Tool Kit ZTSE4470. This kit has a tool box that includes the tools required to remove and install bonded windshields. To order, call toll free in U. S. and Canada 1–800–520–2584 or Fax 1–800–578–7375. **NOTE — The INTERNATIONAL® Bonded Windshield Tool Kit ZTSE4470 is no longer available through the INTERNATIONAL® tool supplier. For materials that are available contact INTERNATIONAL® service parts.**

NOTE – Before starting to remove and replace a windshield, it is required that a self-carboning form from INTERNATIONAL® titled "Bonded Windshield Replacement Report" be filled out completely to confirm the condition of the vehicle and record the lot numbers of the Essex® materials used before starting the work. Refer to Figure 183 (See Figure 183, page 345) for a sample form at the back of this Manual.

1. Chock the wheels and unlatch fiberglass tilt hood on both sides. Raise hood to full open position.

2. Place protective coverings over areas near windshield.

3. Before removing windshield, it will be necessary to remove the windshield wiper arms and blades. Refer to **WINDSHIELD WIPER ARM AND BLADE ASSEMBLY**(See Remove WINDSHIELD WIPER ARM AND BLADE ASSEMBLY, page 92)**, Remove Windshield Wiper Arm and Blade Assembly**.

Refer to Figure 5 (See Figure 5, page 6) for Items in parentheses.

4. If the unit is equipped with an exterior sun shade (Item 1) place a piece of tape (Item 2) on bottom side of the three sun shade mounting brackets (Item 3). This will protect sun shade mounting bracket paint while using cutting tool to remove windshield. If it is desired to remove sun shade, refer to **SUN SHADE** (See Remove SUN SHADE, page 20)**, Remove Sun Shade for 5000*i* or 9000*i* Series** as required.

5. Remove two-piece encapsulated windshield (Item 2, Figure 4) (See Figure 4, page 5) as follows:

Refer to Figure 11 for Items in parentheses.

6. Using a utility knife (Item 1) cut urethane adhesive on both sides of windshield center divider bar trim strip (Item 2) at windshield center divider bar (Item 3) to make it easier to remove windshield center divider bar trim strip.

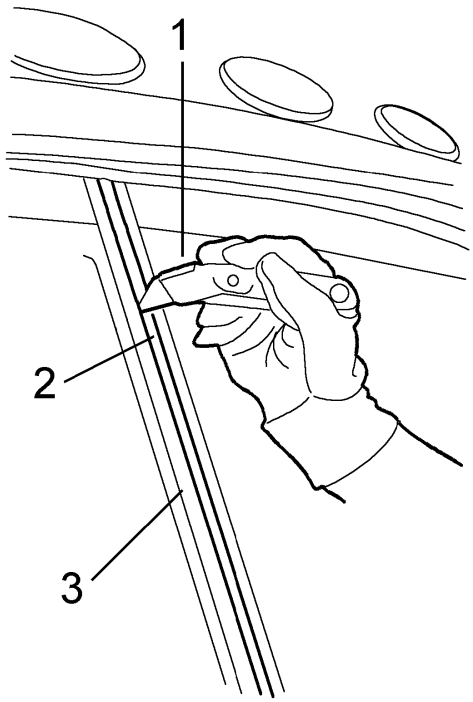

Figure 11 Removing Windshield Center Divider Bar Trim Strip

1. UTILITY KNIFE
2. WINDSHIELD CENTER DIVIDER BAR TRIM STRIP
3. WINDSHIELD CENTER DIVIDER BAR

Refer to Figure 12 for Items in parentheses.

7. Remove windshield center divider bar trim strip (Item 1) by prying it out with a blunt screwdriver (Item 2) and pulling it out of windshield center divider bar (Item 3).

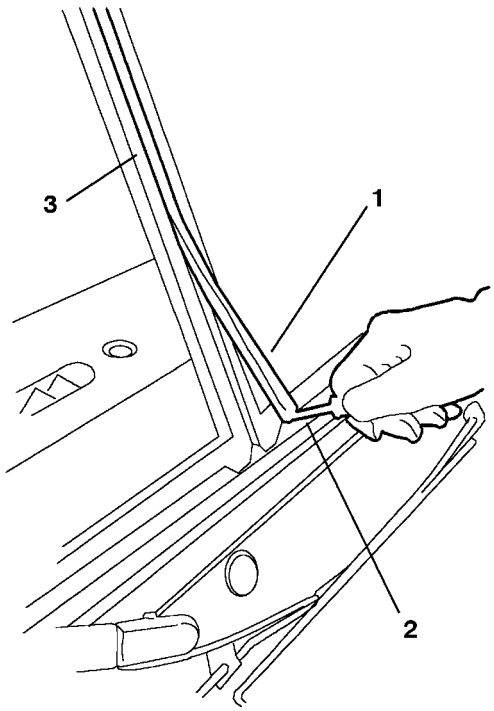

Figure 12 Removing Windshield Rubber Trim Flange at Center Divider Bar

1. WINDSHIELD CENTER DIVIDER BAR TRIM STRIP
2. SCREWDRIVER
3. WINDSHIELD CENTER DIVIDER BAR

Refer to Figure 6 (See Figure 6, page 8) for all Items in parentheses.

8. If removing driver side windshield only, remove four fastener covers (Item 1) from driver side A pillar trim panel (Item 2), then remove four torx self-drilling screws (Item 3) and remove driver side A pillar trim panel. Lay out of the way and save for reinstallation. Then proceed with Step 11 below.

9. If removing passenger side windshield only, remove two fastener covers (Item 4) from two upper fasteners only on passenger side A pillar trim panel (Item 5), then remove three torx self-drilling screws (Item 6). Note that the bottom torx self-drilling screw (Item 6) goes through the inner side cab trim panel. Use blunt tip screwdriver to pry the side cab trim panel out slightly to remove passenger side A pillar trim panel. Lay out of the way and save for reinstallation. Then proceed with Step 11 below.

10. If removing both driver and passenger side windshields perform both Steps 8 and 9 above, then proceed with Step 11 below.

11. Remove ten torx pan head screws (Item 1, Figure 7) (See Figure 7, page 9) from each half of the defroster duct cover panel (Item 2, Figure 7) and remove both halves of the defroster duct cover panels. Lay out of the way and save for reinstallation.

12. If removing passenger side windshield only, once passenger side A pillar (Item 5, Figure 6) (See Figure 6, page 8) and defroster duct cover panels (Item 2, Figure 7) (See Figure 7, page 9) are removed, remove two torx self-drilling screws (Item 7, Figure 6) from passenger side window demist duct with rubber tube (Item 8, Figure 6) and remove them. Lay out of the way and save for reinstallation.

WARNING – To avoid personal injury, wear protective eye wear and work gloves when removing windshield.

13. Using a utility knife (Item 1, Figure 8) (See Figure 8, page 10) lift outer flange of encapsulation rubber trim (Item 2, Figure 8) and cut encapsulation rubber trim flange off all the way around windshield, driver side windshield shown.

Refer to Figure 9 (See Figure 9, page 11) for all Items in parentheses.

NOTE – When using a power knife to cut around the old windshield, use a spray bottle and lubricate the cutting area with water. This will prevent burning of the urethane and re-bonding of the windshield.

CAUTION – When replacing only driver or passenger side windshield, use caution while using power knife to cut out windshield at the center divider bar so that the good windshield is not disturbed or damaged while cutting out the broken windshield.

14. Using a power knife (Item 1) with outside cutting blade (Item 2) and/or inside cutting blade (Item 3) cut all the way around windshield until it is able to be lifted off the cab windshield fence. If necessary use a long handle utility knife (Item 4) to cut through adhesive if windshield will not lift off cab windshield fence, driver side windshield shown.

15. Once the windshield (Item 1, Figure 13) is cut free from cab windshield fence, lift it off the cab. Place windshield out of the way, driver side windshield shown.

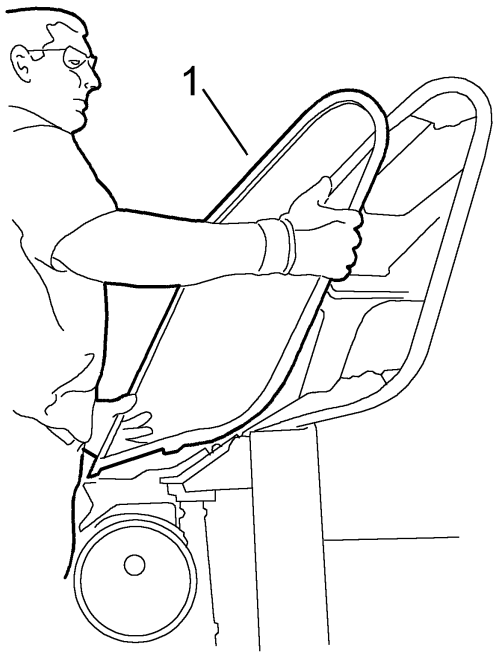

Figure 13 Two Piece Windshield (Driver Side Shown)

1. WINDSHIELD

4.3. REMOVE REAR WINDOW GLASS AND WEATHER SEAL (EXCEPT SLEEPER MODELS)

Refer to Figure 14 (See Figure 14, page 17) for Items in parentheses.

A one piece weather seal (Item 1) secures the rear window glass (Item 2) to the cab. The weather seal is molded to fit tightly over a flange at the edge of the window opening so it secures the glass in the window opening.

NOTE – Because old weather seals are likely to be damaged, always install a new seal when replacing the glass.

NOTE – Use only heat treated glass (AS–2 per ANSI Z26.1–Latest revision).

1. For easy removal of weather seal (Item 1) and rear window glass (Item 2), cut away the portion of weather seal that fits around window flange.

2. Remove rear window and remaining weather seal from window flange.

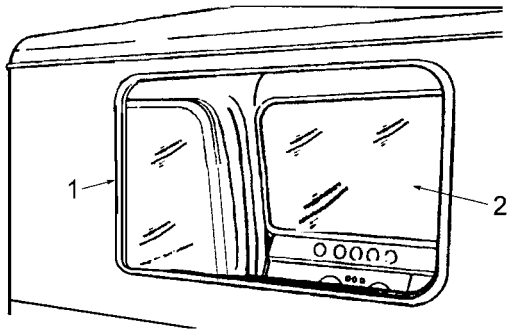

Figure 14 Rear Window Glass

1. WEATHER SEAL
2. REAR WINDOW GLASS

4.4. HOOD SEALS

Remove Hood Seals for 5000*i* and 9000*i* Series

1. Unlatch fiberglass tilt hood on both sides and raise hood to full open position.

Refer to Figure 15 for Items in parentheses.

2. Remove hood seal (Item 1) from cowl tray (Item 2) by pulling it off cowl tray flange starting at one end or the other. Save the hood seal for installation, if not damaged.

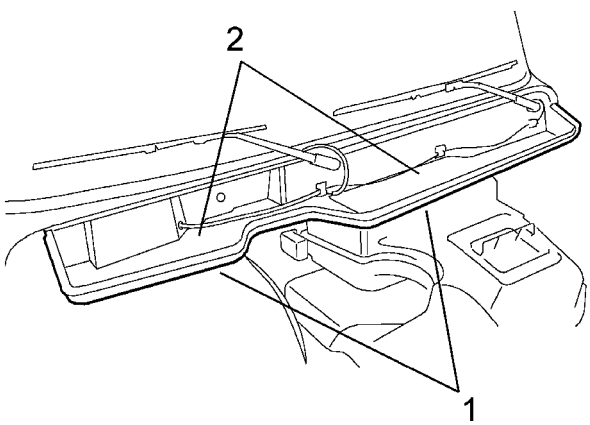

Figure 15 Hood Seal for 5000*i* and 9000*i* Series

1. HOOD SEAL
2. COWL TRAY

Remove Hood Seals for 5000*i* SBA Series with Optional Butterfly Hood

Refer to Figure 16 (See Figure 16, page 19) for Items in parentheses.

1. Unlatch hood latches on both sides and raise left and right side hood to full open position.

2. Remove cowl hood seal (Item 1) from cowl tray (Item 2) by starting at one end or the other and pulling it carefully off the cowl tray flange (Item 3). Save the hood seal for installation, if not damaged.

3. To remove both radiator shell hood seals (Item 4) from radiator shell flange (Item 5), remove two sheet metal screws, flat washers and speed nuts (Item 6) and remove both brackets with seal pads (Items 7 and 8, view in circle A) from top of radiator shell. Remove two sheet metal screws, flat washers and speed nuts (Item 9) and remove bracket with seal pad (Items 10 and 11, view in circle B) from the side of the radiator shell, driver side shown. Repeat for passenger side. Save sheet metal screws, flat washers and speed nuts for reinstallation, if not damaged.

4. If it is necessary to replace seal pad (Item 8, view in circle A) on bracket (Item 7, view in circle A) or seal pad (Item 11, view in circle B) on bracket (Item 10, view in circle B), remove two push-in fasteners (Item 13, view in circle A and circle B) and remove it from bracket (Item 7, view in circle A) or (Item 10, view in circle B). Save push-in fasteners for reinstallation, if not damaged.

5. Remove both radiator shell hood seals (Item 4) by carefully pulling on hood seals at each push-in fastener to remove them. Save hood seals for reinstallation, if not damaged.

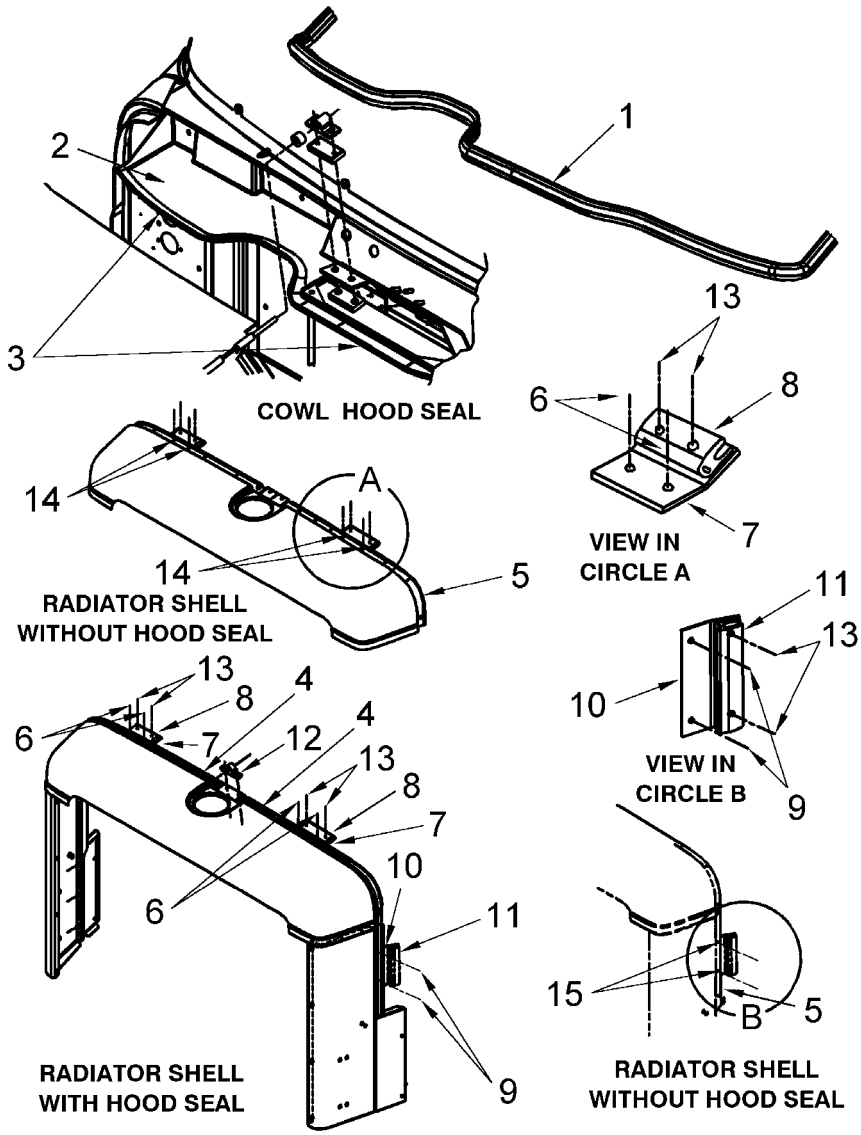

Figure 16 Hood Seals for 5000*i* SBA Series with Optional Butterfly Hood

1. COWL HOOD SEAL
2. COWL TRAY
3. COWL TRAY FLANGE
4. RADIATOR SHELL HOOD SEAL
5. RADIATOR SHELL FLANGE
6. SHEET METAL SCREW, FLAT WASHER AND SPEED NUT
7. BRACKET
8. SEAL PAD
9. SHEET METAL SCREW, FLAT WASHER AND SPEED NUT
10. BRACKET
11. SEAL PAD
12. FRONT HINGE BRACKET
13. PUSH-IN FASTENER
14. FOURTH AND FIFTH HOLES ON RADIATOR SHELL FLANGE
15. FIRST AND SECOND HOLES ON RADIATOR SHELL SIDE FLANGE

4.5. REMOVE SUN SHADE

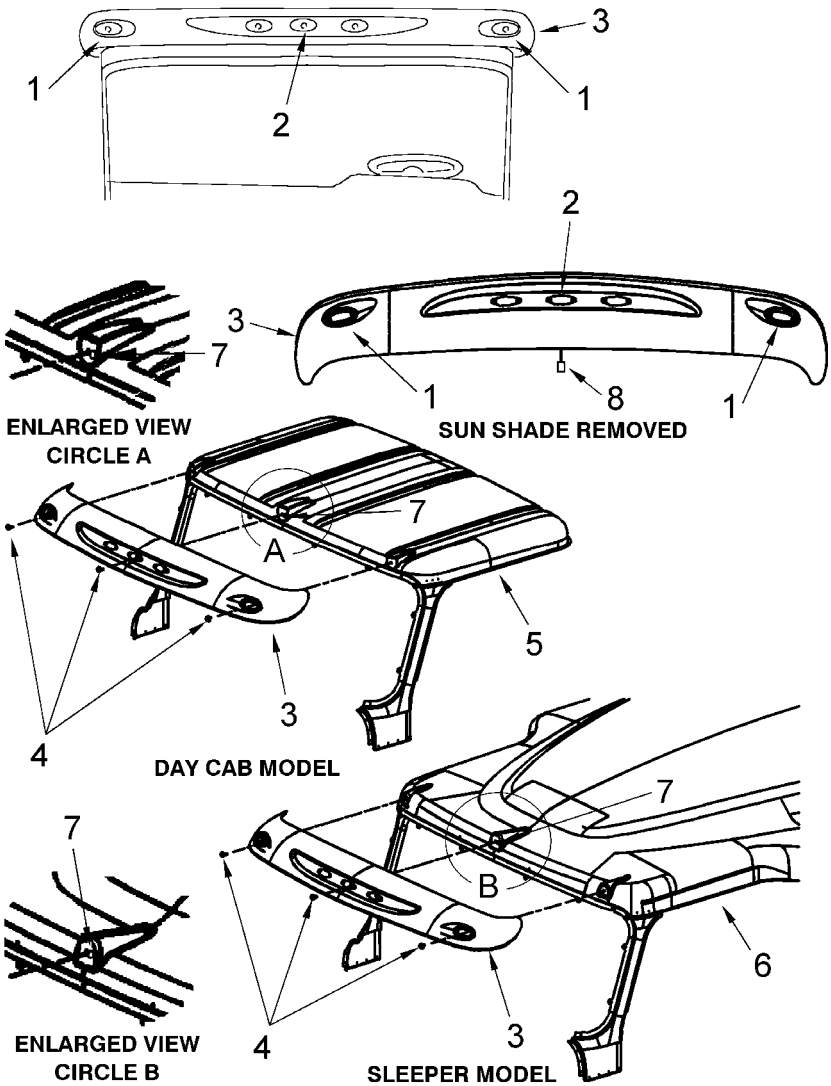

Figure 17 Sun Shade for 5000*i* and 9000*i* Series

1. RIGHT AND LEFT SIDE SUN SHADE CLEARANCE LIGHT
2. CENTER SUN SHADE CLEARANCE LIGHT
3. SUN SHADE
4. HEX HEAD FLANGED MOUNTING SCREW, 3/8-16 X 1 1/4
5. DAY CAB ROOF
6. PRO SLEEPER® ROOF
7. WIRING HARNESS HOLE
8. ELECTRICAL CONNECTOR

Refer to Figure 17 for Items in parentheses.

1. Remove mounting hardware attaching both right and left side sun shade clearance lights (Item 1) and center sun shade clearance light (Item 2) to sun shade (Item 3).

2. Pull right and left side sun shade clearance lights (Item 1) and center sun shade clearance light (Item 2) out of sun shade (Item 3) (they will hang free from wiring harness) to gain access to sun shade hex head flanged mounting screws (Item 4).

3. Reach through clearance light openings and remove three hex head flanged mounting screws (Item 4) attaching sun shade (Item 3) to day cab roof (Item 5) or Pro Sleeper® roof (Item 6).

4. Pull sun shade (Item 3) away from cab roof until wiring harness connector is pulled through wiring harness hole (Item 7) in day cab roof (Item 5) or Pro Sleeper® roof (Item 6). Disconnect electrical connector (Item 8) and remove sun shade. Place sun shade on clean, dry surface to keep it from getting scratched or damaged.

4.6. REMOVE SUN VISOR

Refer to Figure 18 (See Figure 18, page 21) for Items in parentheses.

1. Remove the "A" pillar cover (Item 1) and disconnect electrical connector. Disengage sun visor assembly (Item 2) from visor clip (Item 3, View A).

2. Remove mounting screws (Item 4) securing visor support bracket (Item 5) to cab header. Remove sun visor assembly.

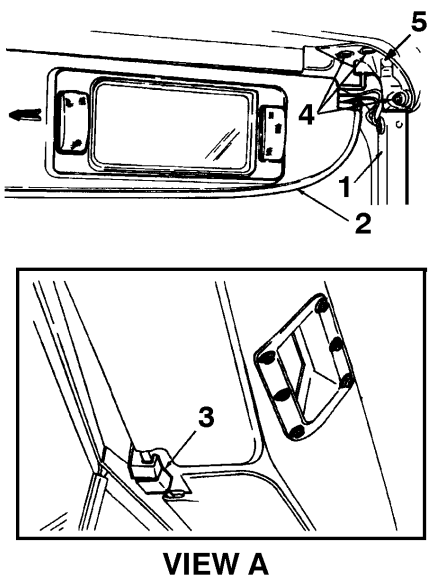

Figure 18 Sun Visor Removal

1. "A" PILLAR COVER
2. SUN VISOR ASSEMBLY
3. VISOR CLIP
4. MOUNTING SCREWS
5. VISOR SUPPORT BRACKET

4.7. IGNITION KEY SWITCH CYLINDER

The ignition key switch and door locks are coded differently so that two separate keys operate ignition key switch and door locks. The code number is stamped on ignition key switch body just in back of cap nut. The code number does not appear on door lock assembly.

To locate code number on ignition key switch, remove ignition key switch mounting cap nut and remove ignition key switch from instrument panel.

At customer request, ignition key switch and door locks can be coded the same so that one key operates both ignition key switch and door lock cylinders.

Refer to Figure 19 for Items in parentheses.

1. The ignition key switch is located to left of driver in dash panel below instrument panel on both 5000*i* and 9000*i* Series. Remove ignition key switch as follows.

2. Remove push-in fasteners and screws and remove front trim panel (Item 1) from underneath dash panel (Item 2) and then remove left side trim panel (Item 3) to allow room to reach in behind dash panel.

3. Unscrew mounting cap nut (Item 4) and remove it from ignition key switch (Item 5).

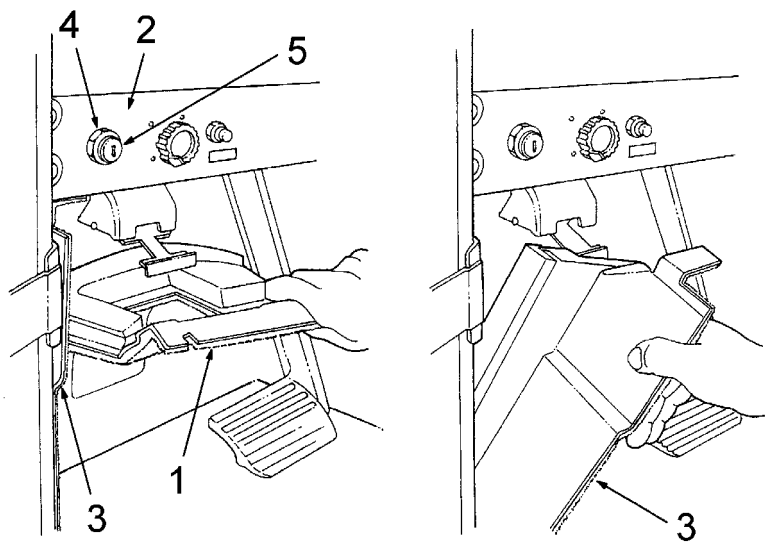

Figure 19 Trim Panels and Ignition Key Switch Cap Nut

1. FRONT TRIM PANEL
2. DASH PANEL
3. LEFT SIDE TRIM PANEL
4. MOUNTING CAP NUT
5. IGNITION KEY SWITCH

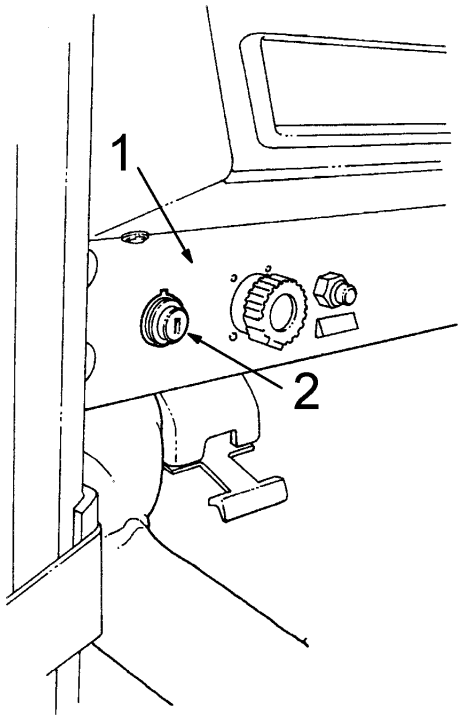

Figure 20 Ignition Key Switch in Dash Panel

1. DASH PANEL
2. IGNITION KEY SWITCH

Refer to Figure 20 for Items in parentheses.

4. Reach up behind dash panel (Item 1) and pull ignition key switch (Item 2) down and out of dash panel.

Refer to Figure 21 for Items in parentheses.

5. Disconnect electrical connector (Item 1) from back of ignition key switch (Item 2) and remove from vehicle.

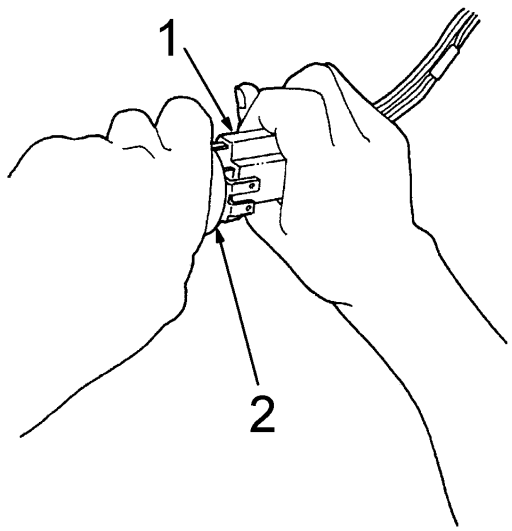

Figure 21 Ignition Key Switch Connector

1. ELECTRICAL CONNECTOR
2. IGNITION KEY SWITCH

Refer to Figure 22 below for Items in parentheses.

6. Insert ignition key (Item 1) into ignition key switch (Item 2) and rotate counterclockwise to accessory position, so that key is lined up with release hole (Item 3) in ignition key switch body.

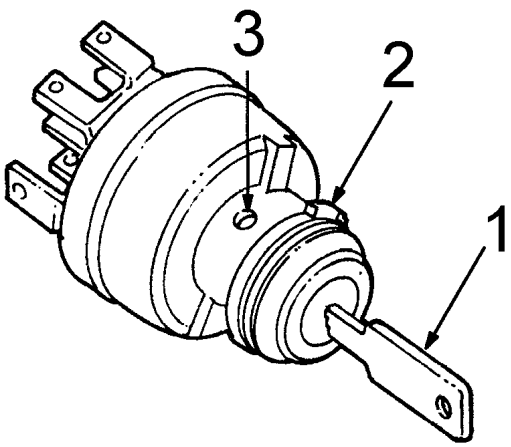

Figure 22 Position Ignition Key Switch for Switch Cylinder Removal

1. IGNITION KEY
2. IGNITION KEY SWITCH
3. RELEASE HOLE

Refer to Figure 23 below for Items in parentheses unless otherwise noted.

7. Insert a 1/16 inch (1.6 mm) diameter pin (paper clip) (Item 1) into release hole (Item 3, Figure 22) (See Figure 22, page 24) in ignition key switch body (Item 2) of ignition key switch and depress switch cylinder retainer.

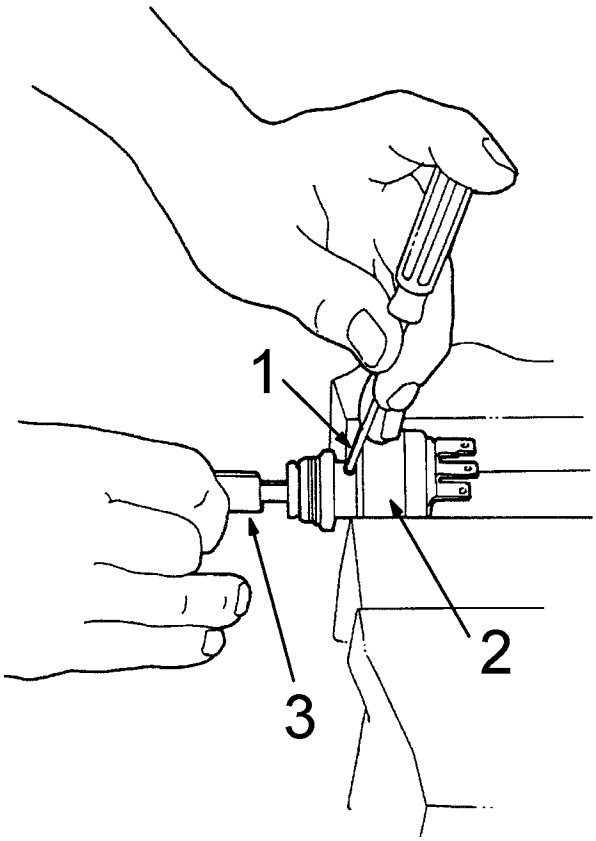

Figure 23 Switch Cylinder and Ignition Key Switch Body

1. PIN (PAPER CLIP)
2. IGNITION KEY SWITCH BODY
3. IGNITION KEY

Refer to Figure 24 for Items in parentheses.

8. Pull complete switch cylinder and ignition key (Items 1 and 3) from ignition key switch body (Item 2).

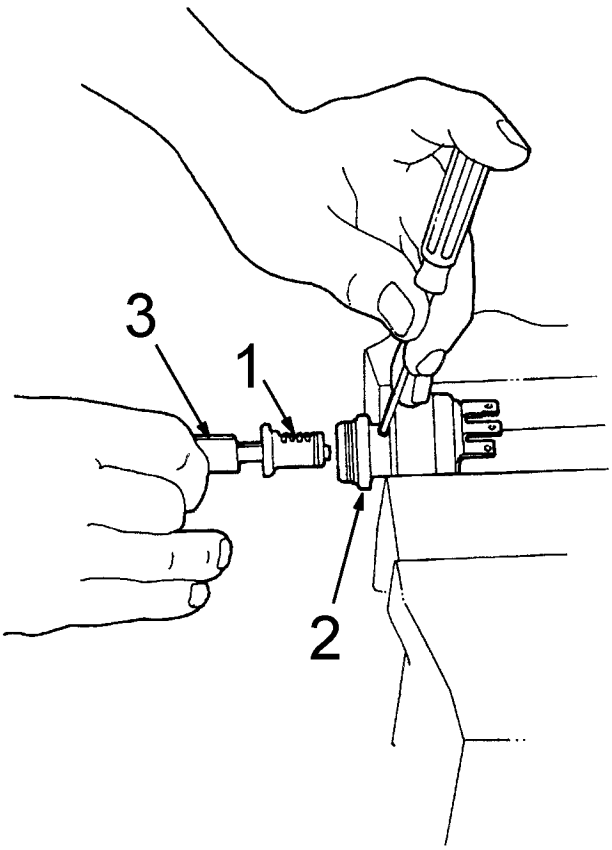

Figure 24 Remove or Install Switch Cylinder

1. SWITCH CYLINDER
2. IGNITION KEY SWITCH BODY
3. IGNITION KEY

NOTE – If vehicle keys are lost, drill out switch cylinder. Using a 5/16 inch (8 mm) drill bit, drill 1/2 to 3/4 inch (12.7 to 19 mm) deep. This will permit tumblers to drop out and free switch cylinder.

4.8. INSTRUMENT PANEL

Refer to Figure 25 (See Figure 25, page 27) for instrument panel locations of speedometer, tachometer, gauges and switches.

Remove Electrically Operated Gauges, Mechanical Air Gauges and Speedometer/Tachometer

1. To remove electrically operated gauges, mechanical air gauges, speedometer and tachometer, refer to **GROUP 08 – ELECTRICAL** in the **Master Service Manual**.

NOTE – To remove face panel where the radio is located, the radio bezel (cover) will have to be removed. To remove radio bezel, grab the bezel on each side of the radio, and carefully pull bezel off the radio.

2. To access fuse panel or circuit breaker panel (optional) located behind glove box, open glove box (Item 6, Figure 25). Reach behind glove box from top and pull glove box stops inward to allow glove box to drop down out of the way. If more clearance is required, pull glove box stops inward, which will allow glove box to drop down past second stop.

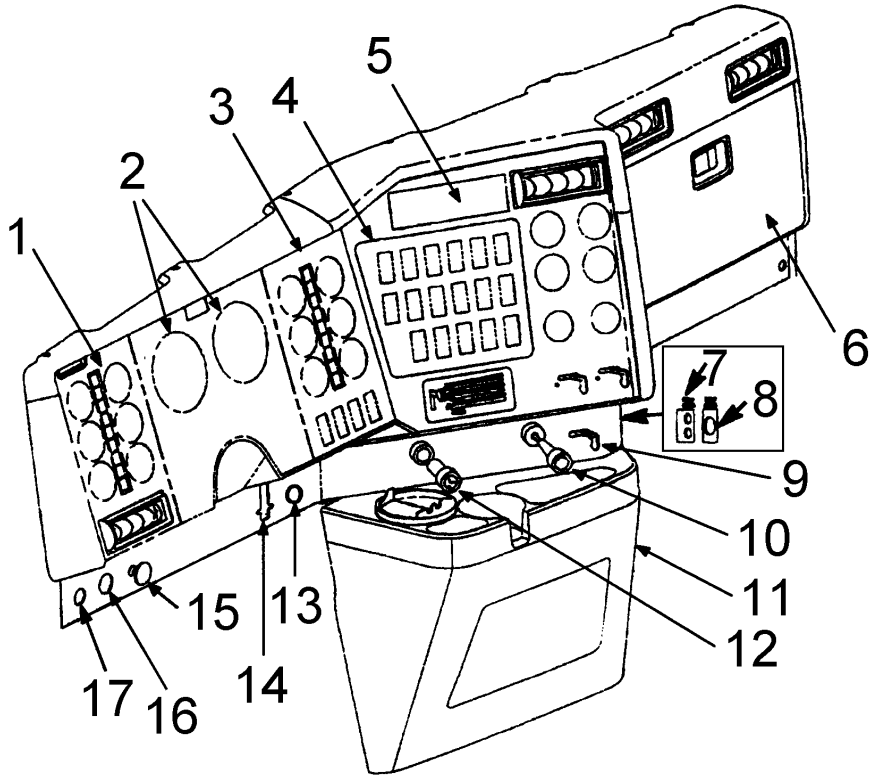

Figure 25 Instrument Panel

1. LEFT GAUGES AND LIGHTS CLUSTER
2. TACHOMETER AND SPEEDOMETER CENTER GAUGE CLUSTER
3. RIGHT GAUGES AND LIGHTS CLUSTER
4. WING PANEL (CONTAINS SWITCH PANEL, RADIO, HEATER/COOLING CONTROLS AND OPTIONAL SWITCHES AND GAUGES)
5. RADIO
6. GLOVE BOX (FUSE/CIRCUIT BREAKER (OPTIONAL) PANEL BEHIND)
7. TWO-POST TERMINAL POWER SOURCE (OPTIONAL)
8. CIGAR TYPE POWER SOURCE (OPTIONAL)
9. AIR SUSPENSION DUMP (OPTIONAL)
10. AIR RECIRCULATION KNOB
11. CENTER CONVENIENCE CONSOLE
12. CIGAR LIGHTER
13. VERNIER THROTTLE (OPTIONAL)
14. EATON TANDEM REAR AXLE OR TRACTION DIFFERENTIAL CONTROL (OPTIONAL)
15. PUSH BUTTON STARTING OR AIR STARTER (OPTIONAL)
16. DIAGNOSTIC CONNECTION; ELECTRONIC ENGINES
17. KEY SWITCH

4.9. REMOVE FLOOR MAT

Refer to Figure 26 below for Items in parentheses.

1. Remove floor mat door scuff plates (Item 1) from both driver and passenger side and headlight dimmer switch on driver side.

2. Remove driver and passenger seats (Item 2). Refer to **DRIVER AND PASSENGER SEATS**(See Remove DRIVER AND PASSENGER SEATS, page 30)**, Remove Driver and Passenger Seats**.

3. Remove floor mat trim panel (Item 3) and floor mat (Item 4).

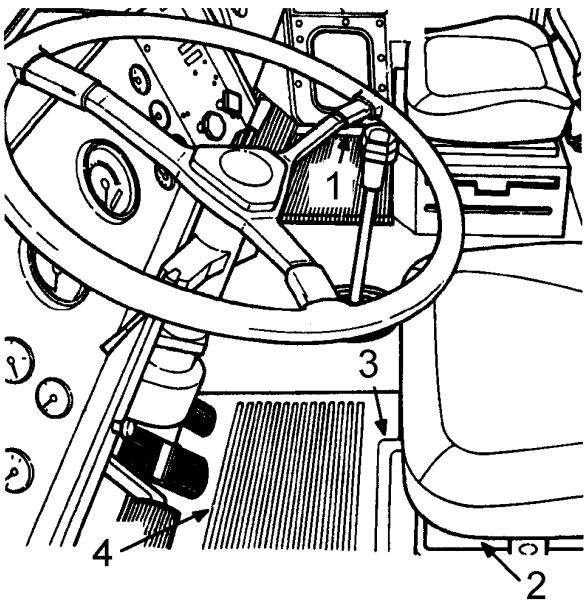

Figure 26 Floor Mat

1. FLOOR MAT DOOR SCUFF PLATE
2. SEAT PEDESTAL
3. FLOOR MAT TRIM PANEL
4. FLOOR MAT

4.10. REMOVE HEADLINER (DAY CAB MODELS ONLY)

Refer to Figure 27 for Items in parentheses unless otherwise noted.

1. Remove headliner trim molding retaining screws. Remove headliner trim moldings (Item 1).

2. Remove plastic push-in retainers (Item 2) holding headliner (Item 3) to cab roof. Make a push-in retainer remover (Figure 28) locally to remove retainers.

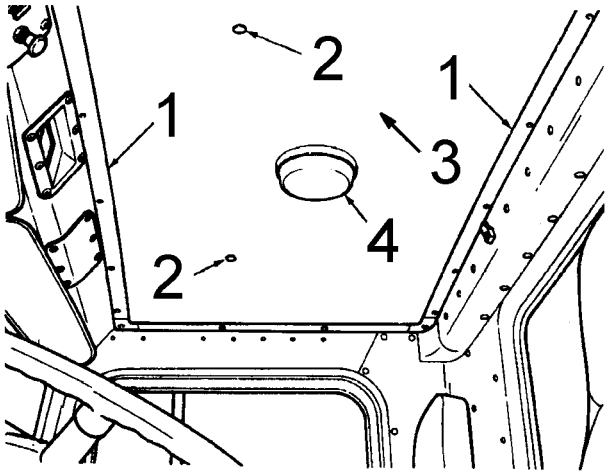

Figure 27 Headliner

1. HEADLINER TRIM MOLDING
2. PUSH-IN RETAINERS
3. HEADLINER
4. CENTER DOME LIGHT

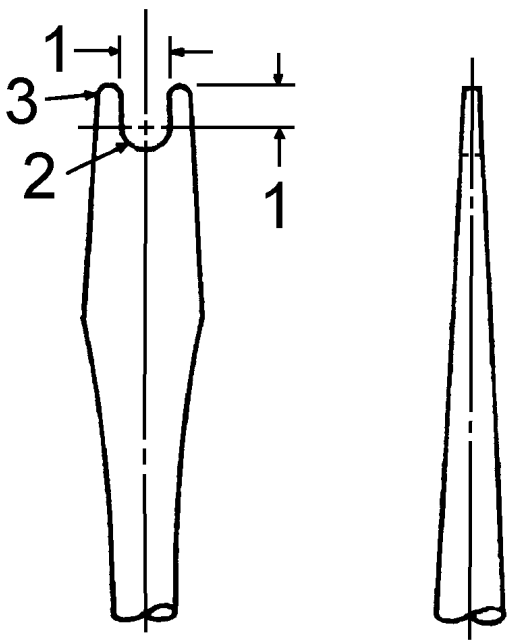

Figure 28 Push-In Retainer Remover

1. 0.188 INCH (4.78 mm)
2. 0.094 INCH (2.39 mm)
3. ROUND OFF ALL EDGES

3. Remove center dome light (Item 4). Be sure to support headliner while removing light assembly.

4. Disconnect dome light electrical connector and remove headliner (Item 3).

4.11. REMOVE DRIVER AND PASSENGER SEATS

Individual air suspension driver and passenger seats, and mechanical passenger seats are available on this cab (Figure 29) and (Figure 30) (See Figure 30, page 31), with additional seat options available for the driver. Both driver and passenger seats provide many seat and back rest adjustments to assure a comfortable ride.

Refer to seat manufacturer's information for additional seat specific details.

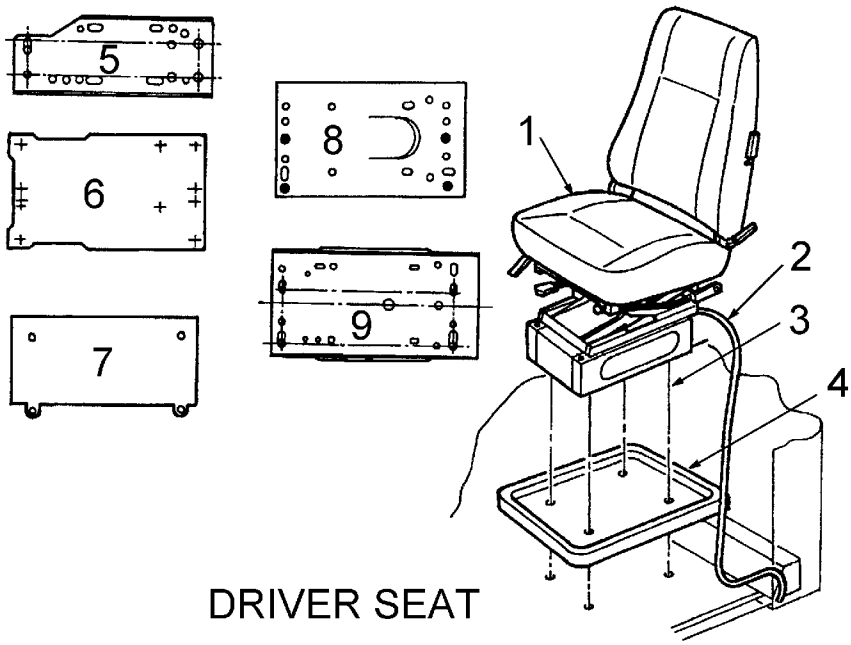

Figure 29 Driver Seat

1. DRIVER SEAT ASSEMBLY (BOSTON 914 SHOWN)
2. NYLON TUBING (AIR LINE)
3. SEAT MOUNTING BOLT
4. FLOOR MAT TRIM PANEL
5. "WEST COASTER" MOUNTING
6. DURAFORM FLEETCRUISER MOUNTING
7. NATIONAL "CUSH-IN-AIR" MOUNTING
8. "BOSTROM" MODEL 914 MOUNTING
9. "UNISON AIR RIDE" MOUNTING

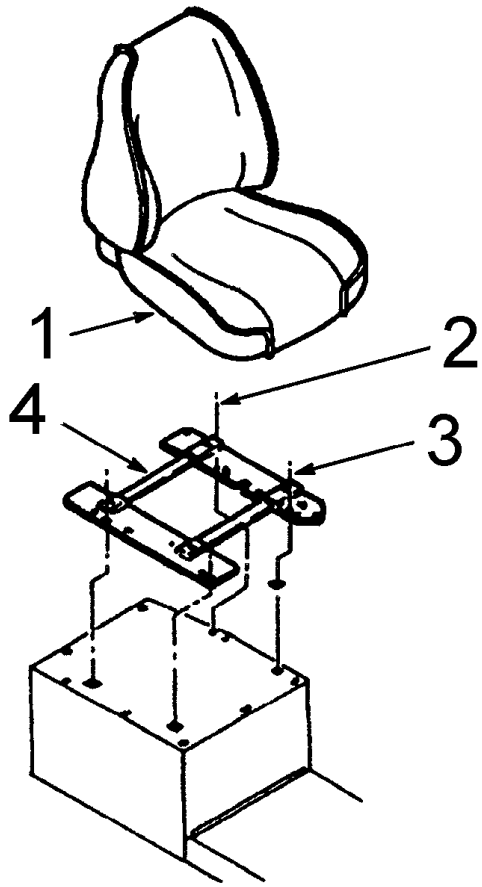

Figure 30 Passenger Seat

1. PASSENGER SEAT ASSEMBLY
2. MOUNTING BOLT
3. MOUNTING BOLT
4. SEAT MOUNTING BASE

Refer to Figure 29 (See Figure 29, page 30) for Items in parentheses.

1. Remove 2 mounting bolts from each side of seat and remove seat belt brackets from seat.

2. Remove driver seat assembly (Item 1) by removing 4 seat mounting bolts (Item 3) which secure seat pedestal to floor. If seat is air suspension type, be sure to disconnect air line (Item 2) before lifting out seat assembly.

Refer to Figure 30 (See Figure 30, page 31) for Items in parentheses.

3. Remove passenger seat assembly (Item 1) by removing 4 mounting bolts (Items 2 and 3) which secure seat frame. If seat is air suspension type, be sure to disconnect air line before lifting out seat assembly.

NOTE – Clean seat suspension and adjusters as required by wiping away any grease or dirt with shop towel. Apply a light coat of multipurpose lube to pivot points, sliding areas and rollers to assure a smooth operation on reinstallation. Wipe away excess lube.

4.12. BACK PANEL

Refer to Figure 31 below for Items in parentheses unless otherwise noted.

1. Remove retaining screws and remove rear window interior trim molding (Item 1).

2. Remove seat belt shoulder bolt (Item 2, Figure 32) (See Figure 32, page 33) and remove seat belt assembly and D-ring (Items 1 and 3, Figure 32) (See Figure 32, page 33) from back panel (Item 2).

3. Remove retaining screws holding back panel (Item 2) to cab.

4. Maneuver back panel (Item 2) out from behind seats.

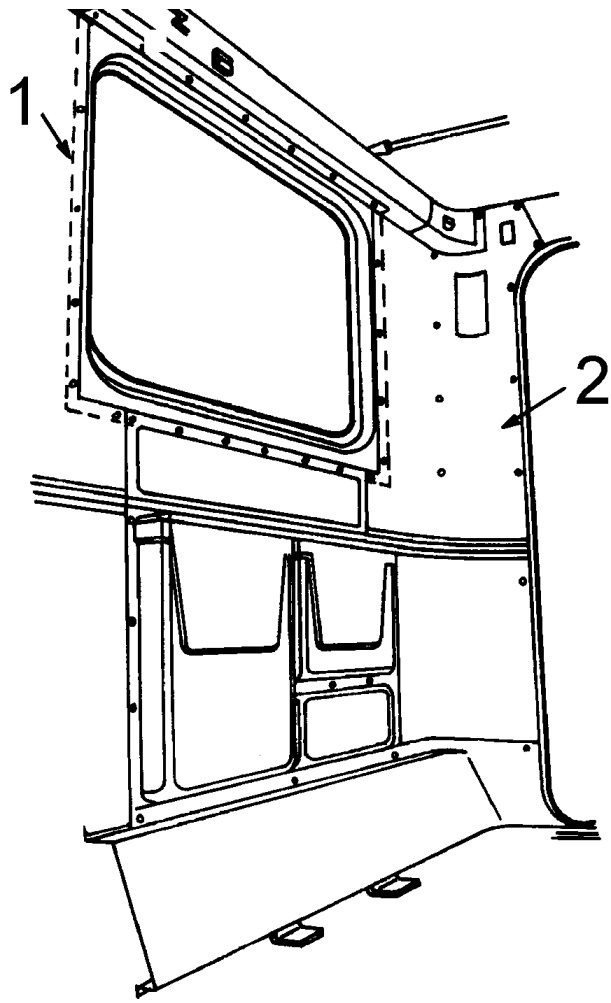

Figure 31 Rear Window Interior Trim Molding

1. REAR WINDOW INTERIOR TRIM MOLDING
2. BACK PANEL

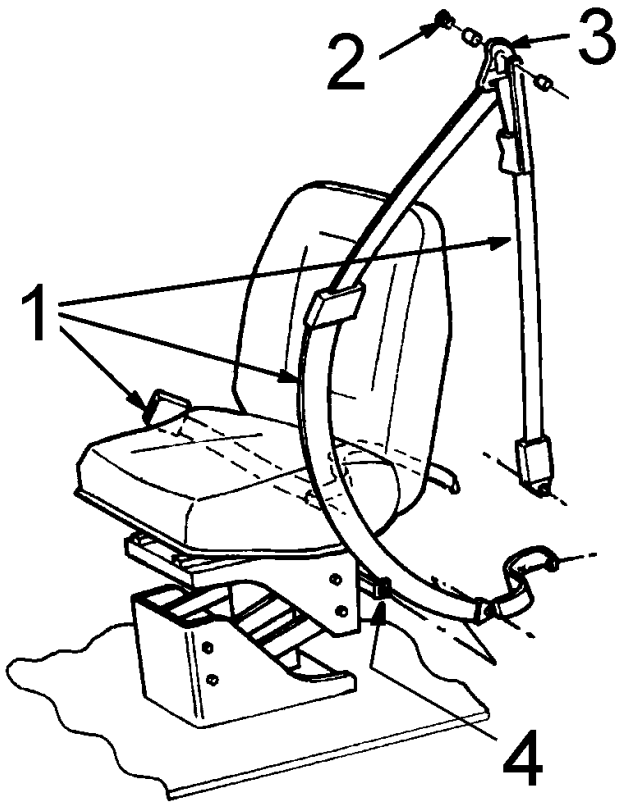

Figure 32 Seat Belt Assembly

1. SEAT BELT ASSEMBLY
2. SHOULDER BOLT 25 TO 35 Lbf-ft (34 TO 47 N•m)
3. D-RING (MUST SWIVEL AFTER ASSEMBLY)
4. SEAT BELT BRACKET

4.13. REMOVE ENGINE COVER

Refer to Figure 33 (See Figure 33, page 34) and Figure 34 (See Figure 34, page 34) for Items in parentheses.

1. Remove retaining screws (Item 3) holding engine cover (Item 2) to cowl panel (Item 1).

2. Remove engine cover (Item 2).

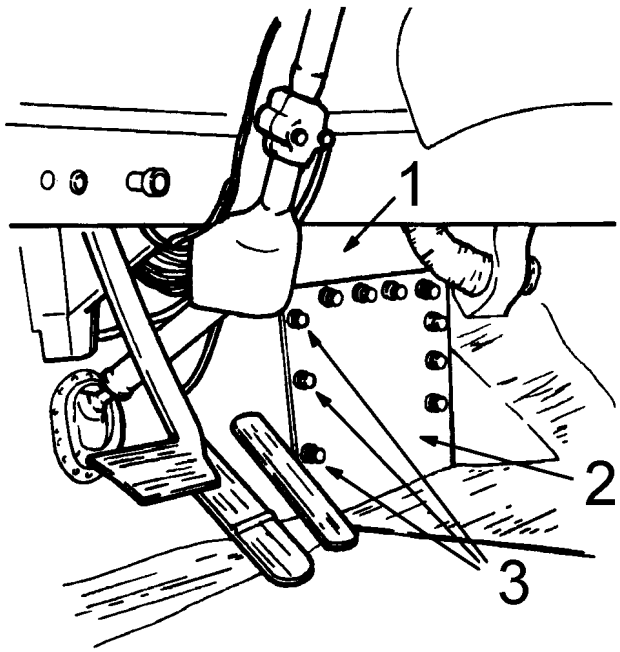

Figure 33 Engine Cover for 5000*i* Series, 9400*i* and 9900*i* Models

1. COWL PANEL
2. ENGINE COVER
3. RETAINING SCREWS

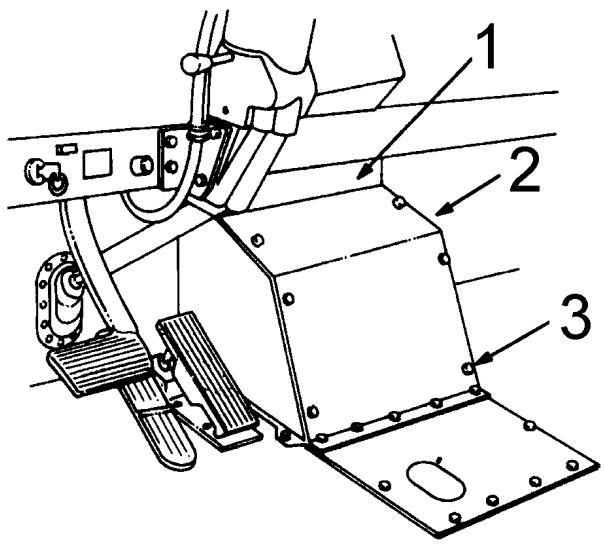

Figure 34 Engine Cover for 9100*i* and 9200*i* Models

1. COWL PANEL
2. ENGINE COVER
3. RETAINING SCREWS

4.14. CAB DOOR LOWER TRIM PANEL

Remove Driver Side Cab Door Lower Trim Panel

Refer to Figure 35 below for Items in parentheses.

1. If vehicle is equipped with manually operated door windows, remove hex socket head mach. screw (Item 1) and remove window regulator handle and washer (Item 2). Save for reinstallation.

2. Remove cab door lower trim panel (Item 3) by removing seven pan head torx screws (Item 4) around outer edge of cab door lower trim panel and hold it away from cab door enough to disconnect courtesy light cable connector (Item 5) from wiring harness courtesy light connector (Item 6) inside cab door. Lay cab door lower trim panel out of the way where it will not be damaged.

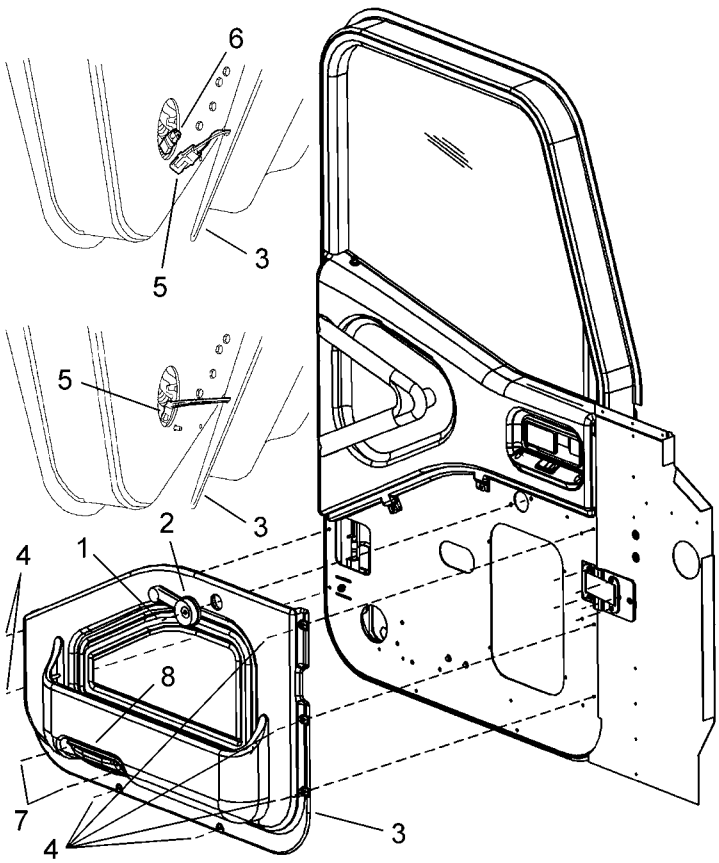

Figure 35 Driver Side Cab Door Lower Trim Panel

1. HEX SOCKET HEAD MACH. SCREWS, 10–24 x 5/8
2. WINDOW REGULATOR HANDLE AND WASHER
3. CAB DOOR LOWER TRIM PANEL
4. PAN HEAD TORX SCREWS, 10–24 x 1
5. COURTESY LIGHT CABLE CONNECTOR
6. WIRING HARNESS COURTESY LIGHT CONNECTOR
7. COURTESY LIGHT MOUNTING SCREWS
8. COURTESY LIGHT ASSEMBLY

Remove Passenger Side Cab Door Lower Trim Panel

Refer to Figure 36 below for Items in parentheses.

1. If vehicle is equipped with manually operated door windows, remove hex socket head mach. screw (Item 1) and remove window regulator handle and washer (Item 2). Save for reinstallation.

2. Remove four mounting screws (Item 3) securing passenger door inner view glass assembly (Item 4) to cab door lower trim panel (Item 5). Save for reinstallation.

3. Remove cab door lower trim panel (Item 5) by removing seven pan head torx screws (Item 6) around outer edge of cab door lower trim panel and hold it away from cab door enough to disconnect courtesy light cable connector (Item 7) from wiring harness courtesy light connector (Item 8) inside cab door. Lay cab door lower trim panel out of the way where it will not be damaged.

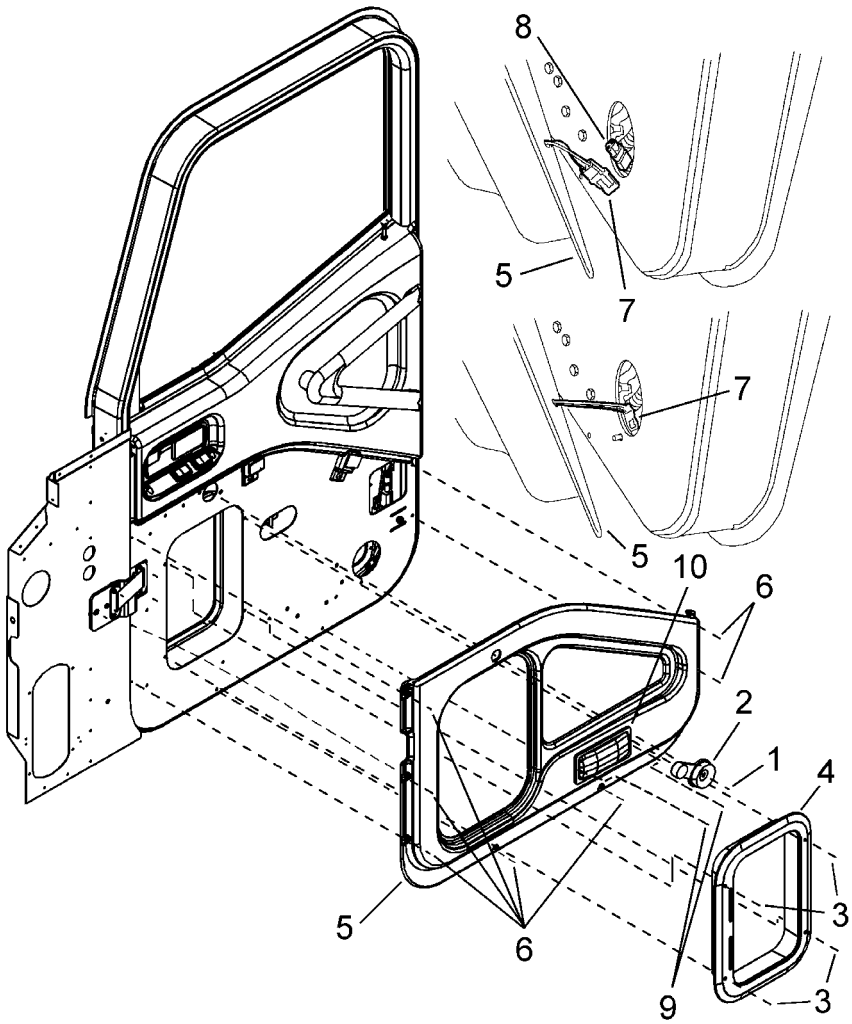

Figure 36 Passenger Side Cab Door Lower Trim Panel

1. HEX SOCKET HEAD MACH. SCREWS, 10–24 x 5/8
2. WINDOW REGULATOR HANDLE AND WASHER
3. MOUNTING SCREWS
4. PASSENGER DOOR INNER VIEW GLASS ASSEMBLY
5. CAB DOOR LOWER TRIM PANEL
6. PAN HEAD TORX SCREWS, 10–24 x 1
7. COURTESY LIGHT CABLE CONNECTOR
8. WIRING HARNESS COURTESY LIGHT CONNECTOR
9. COURTESY LIGHT MOUNTING SCREWS
10. COURTESY LIGHT ASSEMBLY

4.15. CAB DOOR COURTESY LIGHT ASSEMBLY

Remove Driver Side Cab Door Courtesy Light Assembly

1. Remove driver side cab door lower trim panel from cab door. Refer to **CAB DOOR LOWER TRIM PANEL**(See CAB DOOR LOWER TRIM PANEL, page 35)**, Remove Driver Side Cab Door Lower Trim Panel**.

Refer to Figure 35 (See Figure 35, page 35) for Items in parentheses.

2. Remove courtesy light mounting screws (Item 7) from courtesy light assembly (Item 8) and remove courtesy light assembly from cab door lower trim panel (Item 3).

Remove Passenger Side Cab Door Courtesy Light Assembly

1. Remove passenger side cab door lower trim panel from cab door. Refer to **CAB DOOR LOWER TRIM PANEL**(See CAB DOOR LOWER TRIM PANEL, page 35)**, Remove Passenger Side Cab Door Lower Trim Panel** .

Refer to Figure 36 (See Figure 36, page 37) for Items in parentheses.

2. Remove courtesy light mounting screws (Item 9) from courtesy light assembly (Item 10) and remove courtesy light assembly from cab door lower trim panel (Item 5).

4.16. UPPER DOOR TRIM/INNER DOOR PANEL AND WINDOW REGULATOR ASSEMBLY

Remove Driver Side Upper Door Trim/Inner Door Panel and Window Regulator Assembly

NOTE – If door has electrically controlled windows, door locks, mirrors, heated mirrors or CB antenna and door wiring harness is being replaced, disconnect wiring harness connectors to remove upper door trim/inner door panel and window regulator assembly as described below.

1. Remove driver side cab door lower trim panel from cab door. Refer to **CAB DOOR LOWER TRIM PANEL** (See CAB DOOR LOWER TRIM PANEL, page 35)**, Remove Driver Side Cab Door Lower Trim Panel**.

Refer to Figure 37 (See Figure 37, page 39) for Items in parentheses.

2. To disconnect electrical cable connections from cab to driver side cab door, remove cab front insulator panel (Item 1) under instrument panel by removing two black plastic trim fasteners (Item 2) from top flange, then remove one self tapping pan head screw and washer (Item 3) and remove front insulator panel.

3. Remove two pan head screws (Item 4) and remove dimmer switch (Item 5) to make it easier to remove cab side insulator panel (Item 6).

4. Remove cab side insulator panel (Item 6) on driver side by removing one black plastic trim fasteners (Item 7) from top flange, then remove two self tapping pan head screws and washers (Item 8) and remove cab side insulator panel.

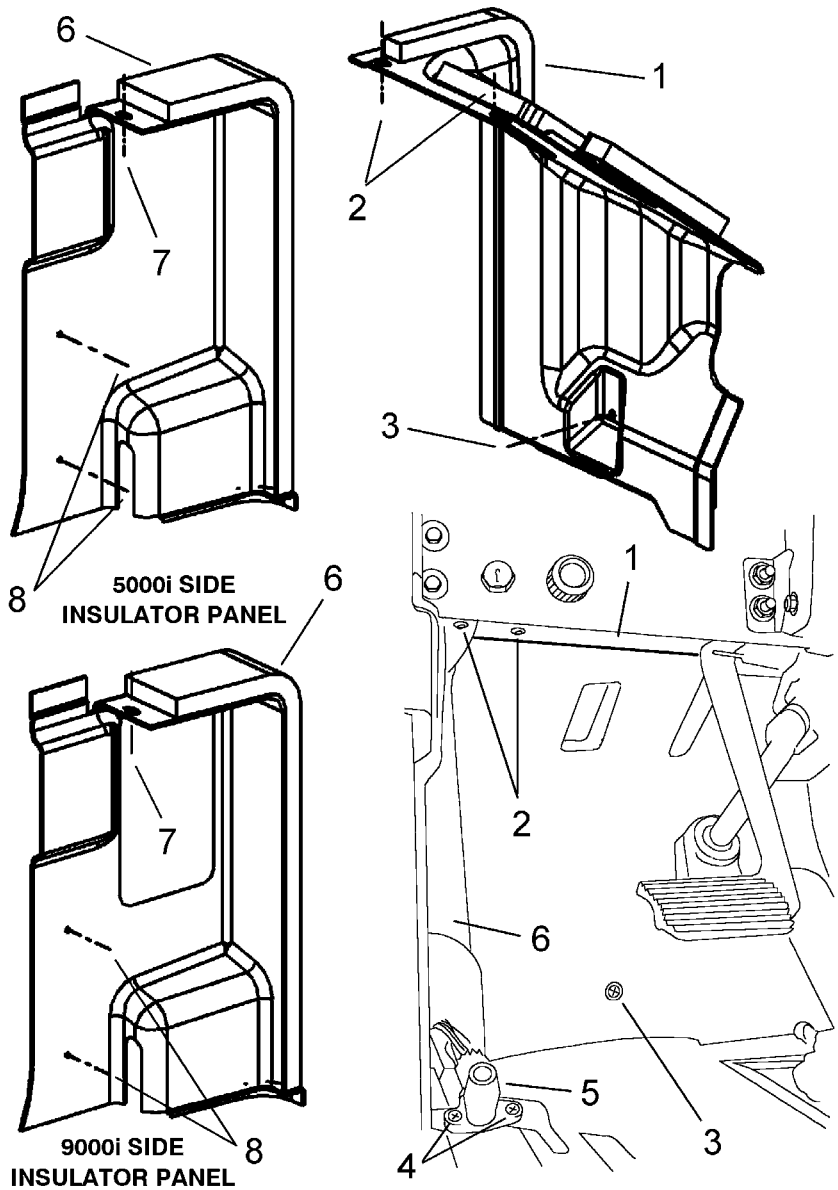

Figure 37 Front and Side Insulator Panel

1. CAB FRONT INSULATOR PANEL
2. BLACK PLASTIC TRIM FASTENER
3. SELF TAPPING PAN HEAD SCREW, 10–16 X 1 AND WASHER, .219 ID X .5 OD
4. PAN HEAD SCREW
5. DIMMER SWITCH
6. CAB SIDE INSULATOR PANEL
7. BLACK PLASTIC TRIM FASTENER
8. SELF TAPPING PAN HEAD SCREW, 10–16 X 1 AND WASHER, .219 ID X .5 OD

5. If vehicle is equipped with electric windows, use electric window switch button and lower window so the two hex head mach. screws (Item 5, Figure 41) (See Figure 41, page 43) are accessible through oval

opening in center of inner door panel (Item 6, Figure 41) (See Figure 41, page 43) before disconnecting connectors in following step.

Refer to Figure 38 for Items in parentheses.

6. Reach under dash panel near outer cab wall and pull cable assembly down to access electrical cable connectors. Disconnect courtesy light connector (Item 1) and CB cable connector (Item 2), if so equipped, and disconnect electric window connector (Item 3) and electric door lock connector (Item 4). If vehicle is equipped with heated mirrors and/or electric mirrors, disconnect connectors for them also.

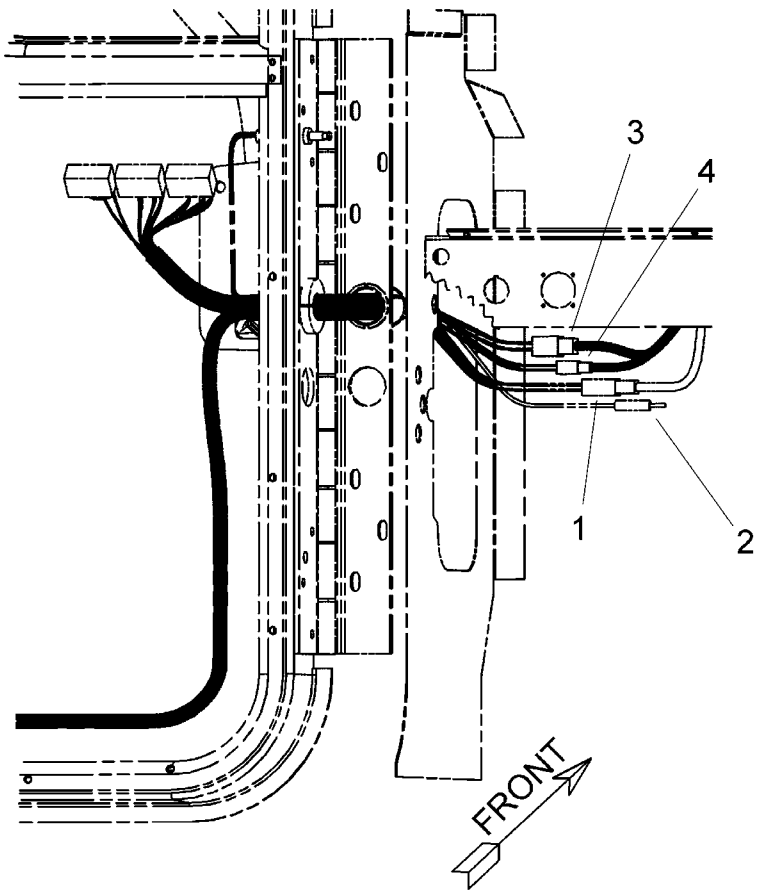

Figure 38 Electrical Cable Connectors

1. COURTESY LIGHT CONNECTOR
2. CB CABLE CONNECTOR
3. ELECTRIC WINDOW CONNECTOR
4. ELECTRIC DOOR LOCK CONNECTOR

Refer to Figure 39 for Items in parentheses.

7. Once connectors are disconnected, carefully pull electrical cable (Item 1) through side of cab (Item 2), cab hinge pillar (Item 3) and cab hinge pillar grommet (Item 4); each connector will have to be pulled through separately.

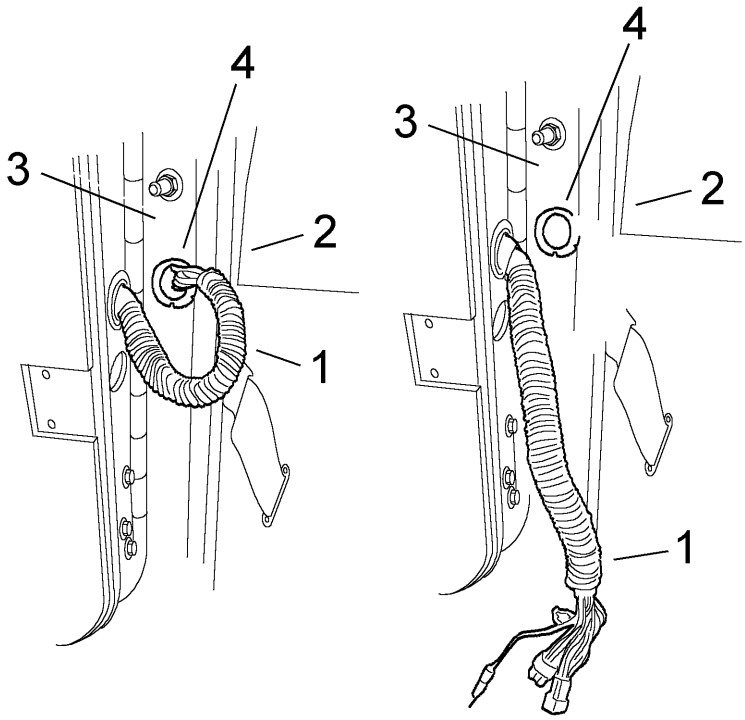

Figure 39 Electrical Cable and Connectors inside Cab

1. ELECTRICAL CABLE
2. CAB SIDE
3. CAB HINGE PILLAR
4. CAB HINGE PILLAR GROMMET

Refer to Figure 40 for Items in parentheses.

8. Remove two pan head mach. screws (Item 1) securing cab door check strap (Item 2) to cab door frame (Item 3).

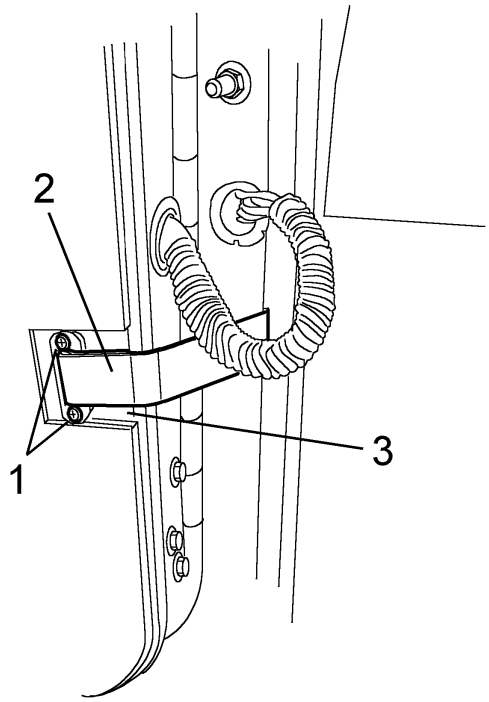

Figure 40 Cab Door Check Strap

1. PAN HEAD MACH. SCREWS, 1/4–20 x 1–1/4
2. CAB DOOR CHECK STRAP
3. CAB DOOR FRAME

Refer to Figure 41 (See Figure 41, page 43) for Items in parentheses unless otherwise noted.

9. Unscrew door lock knob (Item 1) from door lock control rod (Item 2) sticking through opening in upper door trim/inner door panel and window regulator assembly (Item 3).

10. If vehicle window is manually operated, temporarily slide window regulator handle (Item 2, Figure 35) (See Figure 35, page 35) onto window regulator handle shaft (Item 4) and lower window so the two hex head mach. screws (Item 5) are accessible through oval opening in the center of inner door panel (Item 6). If vehicle has electric windows this should have been done in Step 5 above so that Step 12 below can be accomplished.

11. Before removing two hex head mach. screws (Item 5) accessible through oval opening in the center of inner door panel (Item 6), place a wood block (Item 7), 12.5 inches long, through opening in inner door panel between bottom of window and bottom of door to prop window up so it will not fall to the bottom of cab door. This will prevent having to try and lift window back into position during installation.

12. Remove two hex head mach. screws (Item 5) securing window regulator assembly to window regulator bracket on window.

13. Through electric door lock actuator access opening in inner door panel (Item 6), slide retaining clip (Item 8) off electric door lock control rod from electric door lock actuator (Item 9) and remove it from electric door lock control rod (Item 10).

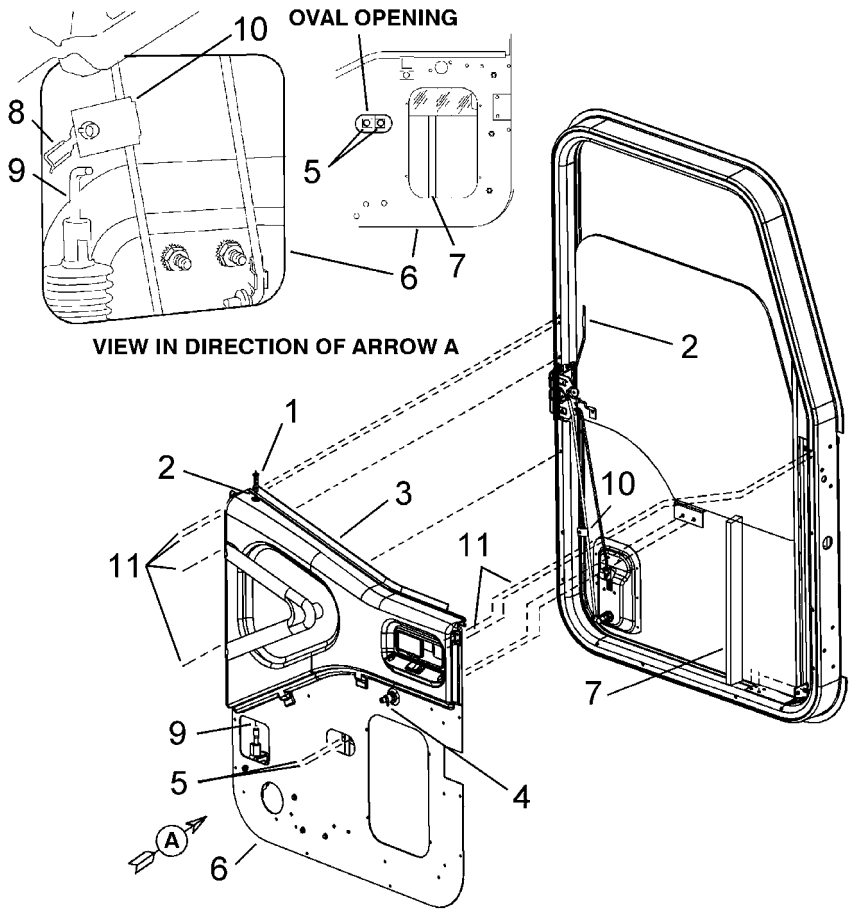

Figure 41 Upper Door Trim/Inner Door Panel and Window Regulator Assembly

1. DOOR LOCK KNOB
2. DOOR LOCK CONTROL ROD
3. UPPER DOOR TRIM/INNER DOOR PANEL AND WINDOW REGULATOR ASSEMBLY
4. WINDOW REGULATOR HANDLE SHAFT
5. HEX HEAD MACH. SCREWS, 1/4–28 UNF x 3/4
6. INNER DOOR PANEL
7. WOOD BLOCK, 12.5 INCHES LONG
8. RETAINING CLIP
9. ELECTRIC DOOR LOCK ACTUATOR
10. ELECTRIC DOOR LOCK CONTROL ROD
11. PAN HEAD TORX SCREWS, 10–24 x 1

Refer to Figure 42 for Items in parentheses.

14. Squeeze lower mirror mounting bracket plastic cover (Item 1) on both sides and remove it to access electrical cable connectors (Item 2). Disconnect all connectors required, such as CB cable connector, and if so equipped, electric mirror and/or heated mirror connectors.

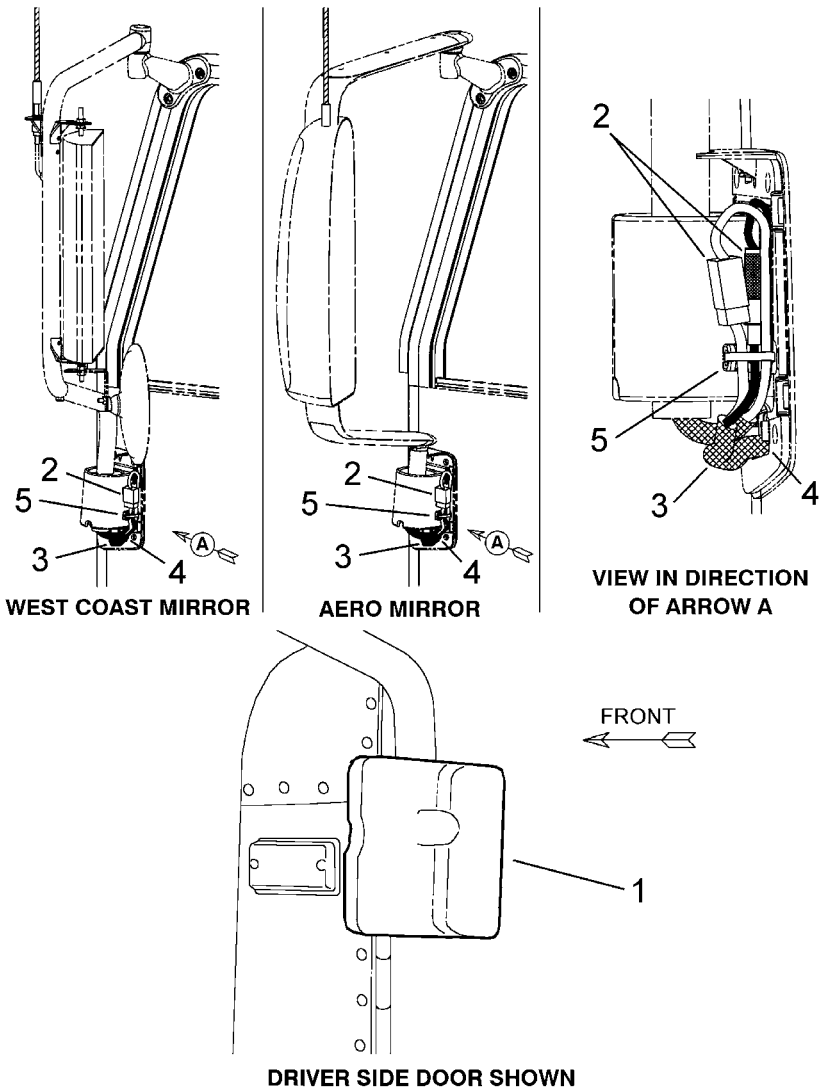

Figure 42 Electrical Cable and Connectors to Mirror

1. LOWER MIRROR MOUNTING BRACKET PLASTIC COVER
2. ELECTRICAL CABLE CONNECTORS
3. ELECTRICAL CABLE
4. OPENING IN MIRROR MOUNTING BRACKET AND CAB DOOR
5. TYWRAP

Refer to Figure 41 (See Figure 41, page 43) for Items in parentheses.

15. Remove six pan head torx screws (Item 11) from upper door trim/inner door panel and window regulator assembly (Item 3).

16. Lift upper door trim/inner door panel and window regulator assembly (Item 3) up over door lock control rod (Item 2).

Refer to Figure 43 for Items in parentheses.

17. Hold upper door trim/inner door panel and window regulator assembly (Item 1) away from cab door enough to disconnect two piece control rod (Item 2) from inner door handle (Item 3) to door latch assembly (Item 4). Slide retaining clip (Item 5) off inner door handle control rod (Item 6) and remove it from door latch inner door handle control rod (Item 7).

18. While holding upper door trim/inner door panel and window regulator assembly (Item 1) away from cab door, disconnect cab door courtesy light switch connector (Item 8) from cab door courtesy light switch.

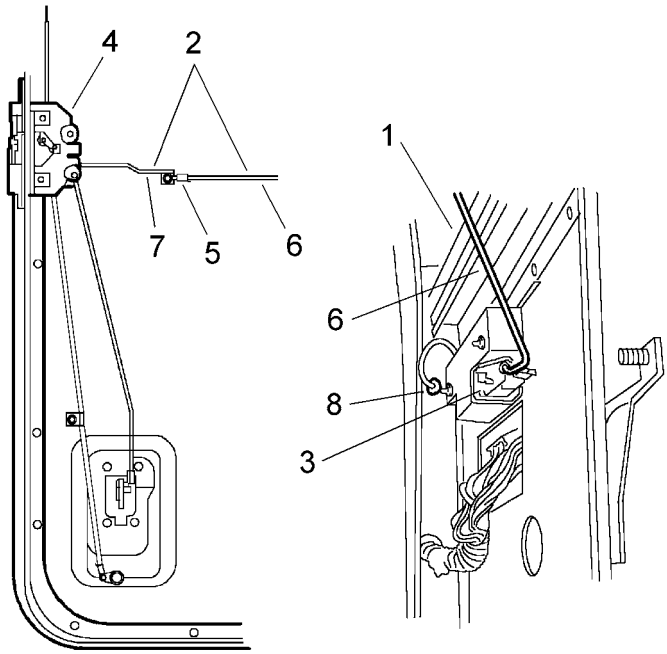

Figure 43 Upper Door Trim/Inner Door Panel and Window Regulator Assembly Connections

1. UPPER DOOR TRIM/INNER DOOR PANEL AND WINDOW REGULATOR ASSEMBLY
2. TWO PIECE CONTROL ROD
3. INNER DOOR HANDLE
4. DOOR LATCH ASSEMBLY
5. RETAINING CLIP
6. INNER DOOR HANDLE CONTROL ROD
7. DOOR LATCH INNER DOOR HANDLE CONTROL ROD
8. CAB DOOR COURTESY LIGHT SWITCH CONNECTOR

Refer to Figure 44 for Items in parentheses.

19. Carefully pull cab door electrical cable (Item 1) through cab door and cab door hinge; each connector will have to be pulled through separately. Also carefully pull mirror electrical cable (Item 2) through opening in mirror mounting bracket and cab door; each connector will have to be pulled through separately. Now upper door trim/inner door panel and window regulator assembly (Item 3) is free of cab door and can be placed out of the way where it will not get damaged. Save for reinstallation.

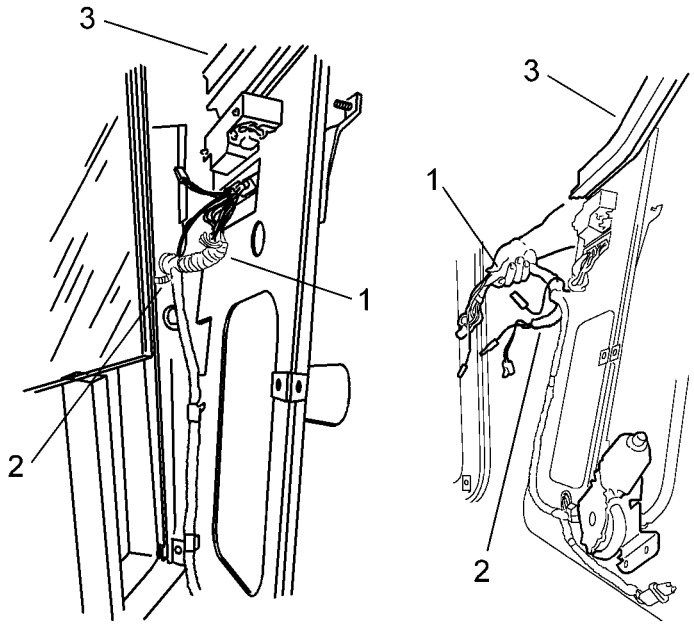

Figure 44 Cab Door and Mirror Electrical Cable

1. CAB DOOR ELECTRICAL CABLE
2. MIRROR ELECTRICAL CABLE
3. UPPER DOOR TRIM/INNER DOOR PANEL AND WINDOW REGULATOR ASSEMBLY

20. If replacing door wiring harness, disconnect connectors to electric door lock actuator and electric door window motor as required, then push the push-in fasteners on wiring harness through upper door trim/inner door panel and window regulator assembly and remove door wiring harness.

Remove Passenger Side Upper Door Trim/Inner Door Panel and Window Regulator Assembly

NOTE – If door has electrically controlled windows, door locks, mirrors, heated mirrors or CB antenna and door wiring harness is being replaced, disconnect wiring harness connectors to remove upper door trim/inner door panel and window regulator assembly as described below.

1. Remove passenger side cab door lower trim panel from cab door. Refer to **CAB DOOR LOWER TRIM PANEL** (See CAB DOOR LOWER TRIM PANEL, page 35)**, Remove Passenger Side Cab Door Lower Trim Panel**.

Refer to Figure 45 for Items in parentheses.

2. To disconnect electrical cable connections from cab to passenger side cab door, remove cab front insulator panel (Item 1) under instrument panel by removing three black plastic trim fasteners (Item 2) from top flange, then remove four self tapping pan head screws and washers (Item 3) and remove front insulator panel.

3. Remove cab side insulator panel (Item 4) on passenger side by removing two self tapping pan head screws and washer (Item 5) and remove cab side insulator panel.

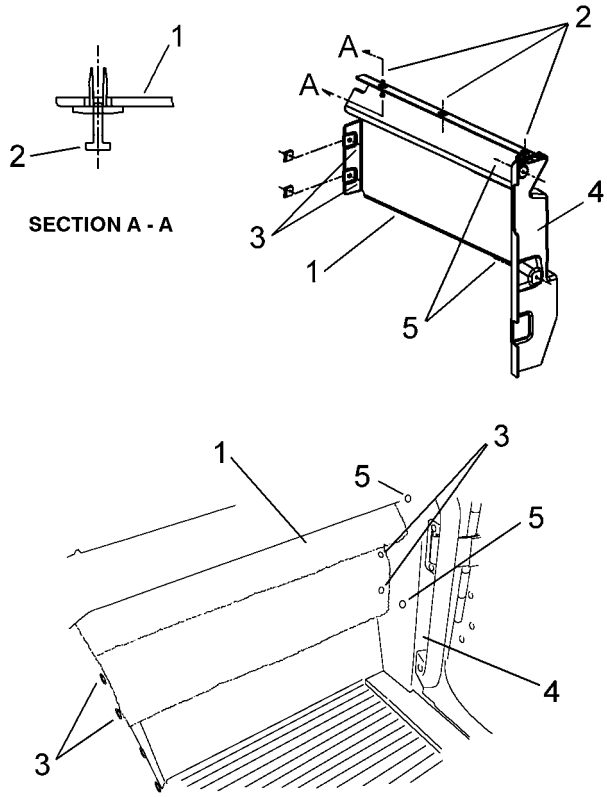

Figure 45 Front and Side Insulator Panel

1. CAB FRONT INSULATOR PANEL
2. BLACK PLASTIC TRIM FASTENER
3. SELF TAPPING PAN HEAD SCREW, 10–16 X 1 AND WASHER, .219 ID X .5 OD
4. CAB SIDE INSULATOR PANEL
5. SELF TAPPING PAN HEAD SCREW, 10–16 X 1 AND WASHER, .219 ID X .5 OD

4. If vehicle is equipped with electric windows use electric window button and lower window so the two hex head mach. screws (Item 5, Figure 49) (See Figure 49, page 51) are accessible through oval opening in center of inner door panel (Item 6, Figure 49) (See Figure 49, page 51) before disconnecting connectors in following step.

Refer to Figure 46 for Items in parentheses.

5. Reach under dash panel near outer cab wall and pull cable assembly down to access electrical cable connectors. Disconnect courtesy light connector (Item 1) and CB cable connector (Item 2). If so equipped, disconnect electric window connector (Item 3) and electric door lock connector (Item 4). If vehicle is equipped with heated mirrors and/or electric mirrors, disconnect connectors for them also.

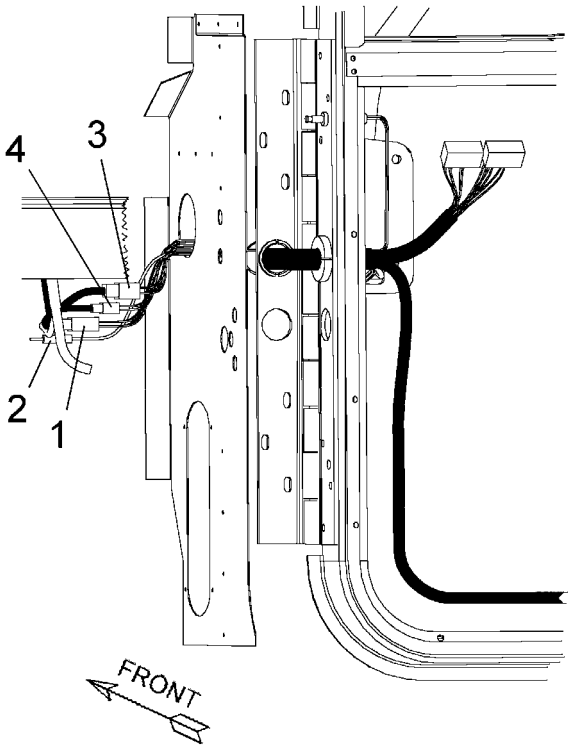

Figure 46 Electrical Cable Connectors

1. COURTESY LIGHT CONNECTOR
2. CB CABLE CONNECTOR
3. ELECTRIC WINDOW CONNECTOR
4. ELECTRIC DOOR LOCK CONNECTOR

Refer to Figure 47 for Items in parentheses.

6. Once connectors are disconnected, carefully pull electrical cable (Item 1) through side of cab (Item 2), cab hinge pillar (Item 3) and cab hinge pillar grommet (Item 4); each connector will have to be pulled through separately.

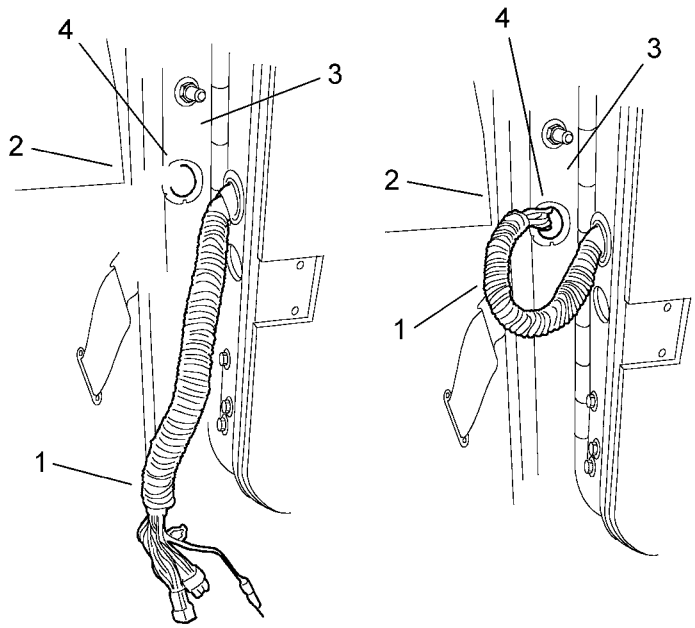

Figure 47 Electrical Cable and Connectors inside Cab

1. ELECTRICAL CABLE
2. CAB SIDE
3. CAB HINGE PILLAR
4. CAB HINGE PILLAR GROMMET

Refer to Figure 48 for Items in parentheses unless otherwise noted.

7. Remove two pan head mach. screws (Item 1) securing cab door check strap (Item 2) to cab door frame (Item 3).

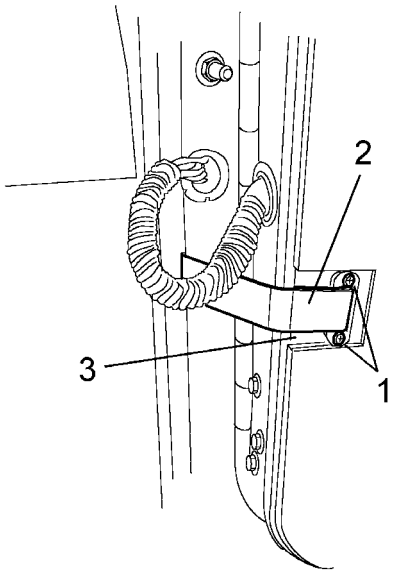

Figure 48 Cab Door Check Strap

1. PAN HEAD MACH. SCREWS, 1/4–20 x 1–1/4
2. CAB DOOR CHECK STRAP
3. CAB DOOR FRAME

Refer to Figure 49 (See Figure 49, page 51) for Items in parentheses unless otherwise noted.

8. Unscrew door lock knob (Item 1) from door lock control rod (Item 2) sticking through opening in upper door trim/inner door panel and window regulator assembly (Item 3).

9. If vehicle window is manually operated, temporarily slide window regulator handle (Item 2, Figure 36) (See Figure 36, page 37) onto window regulator handle shaft (Item 4) and lower window so the two hex head mach. screws (Item 5) are accessible through oval opening in the center of inner door panel (Item 6). If vehicle has electric windows this should have been done in Step 4 above so that Step 11 below can be accomplished.

10. Before removing two hex head mach. screws (Item 5) accessible through oval opening in the center of inner door panel (Item 6), place a wood block (Item 7), 12.5 inches long, through opening in inner door panel between bottom of window and bottom of door to prop window up so it will not fall to the bottom of cab door. This will prevent having to try and lift window back into position during installation.

11. Remove two hex head mach. screws (Item 5) securing window regulator assembly to window regulator bracket on window.

12. Through electric door lock actuator access opening in inner door panel (Item 6), slide retaining clip (Item 8) off electric door lock control rod from electric door lock actuator (Item 9) and remove it from electric door lock control rod (Item 10).

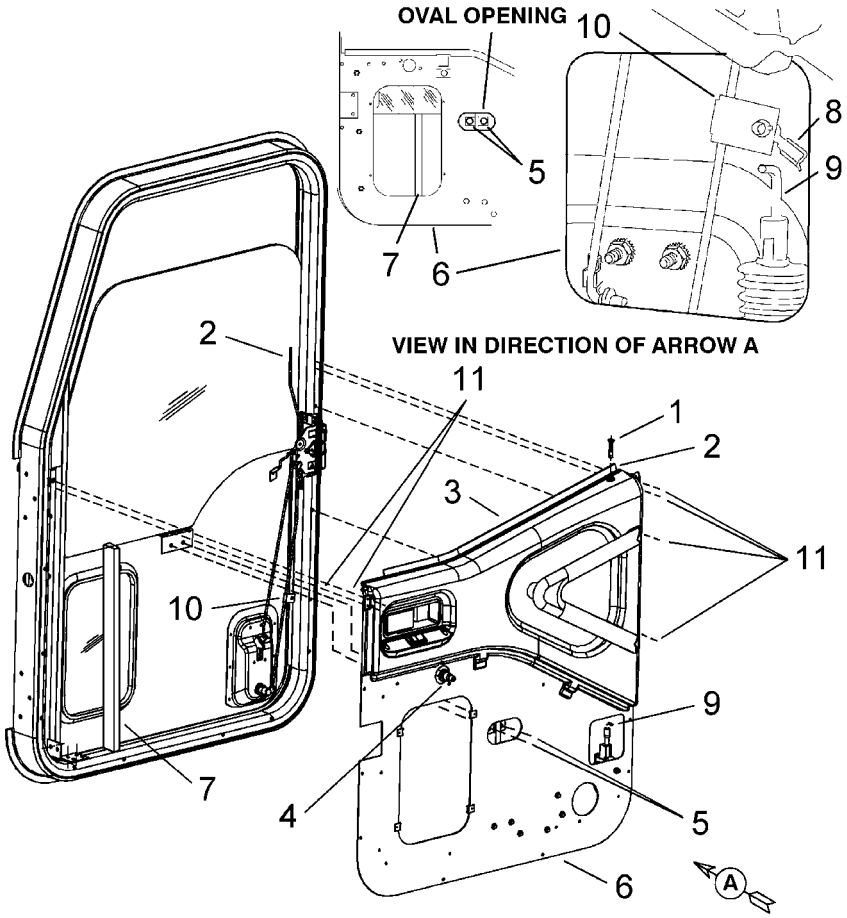

Figure 49 Upper Door Trim/Inner Door Panel and Window Regulator Assembly

1. DOOR LOCK KNOB
2. DOOR LOCK CONTROL ROD
3. UPPER DOOR TRIM/INNER DOOR PANEL AND WINDOW REGULATOR ASSEMBLY
4. WINDOW REGULATOR HANDLE SHAFT
5. HEX HEAD MACH. SCREWS, 1/4–28 UNF x 3/4
6. INNER DOOR PANEL
7. WOOD BLOCK, 12.5 INCHES LONG
8. RETAINING CLIP
9. ELECTRIC DOOR LOCK ACTUATOR
10. ELECTRIC DOOR LOCK CONTROL ROD
11. PAN HEAD TORX SCREWS, 10–24 x 1

Refer to Figure 50 for Items in parentheses.

13. Squeeze lower mirror mounting bracket plastic cover (Item 1) on both sides and remove it to access electrical cable connectors (Item 2). Disconnect all connectors required, such as CB cable connector, and if so equipped, electric mirror and/or heated mirror connectors.

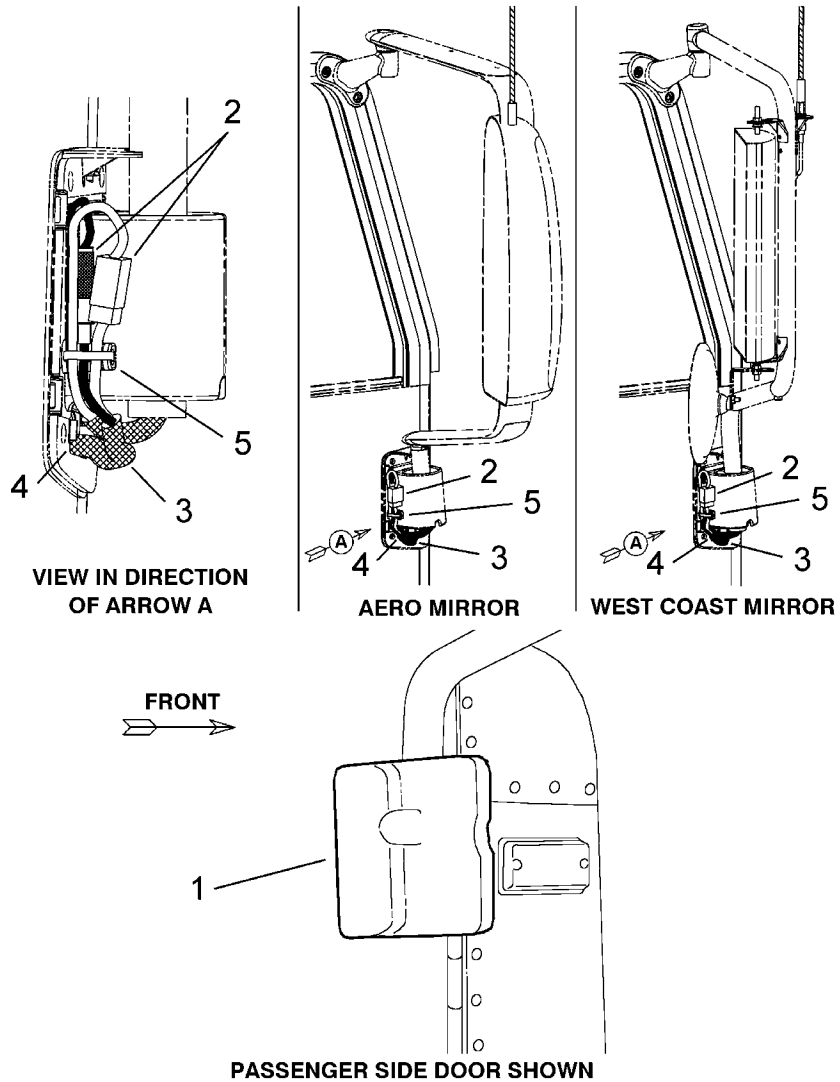

Figure 50 Electrical Cable and Connectors to Mirror

1. LOWER MIRROR MOUNTING BRACKET PLASTIC COVER
2. ELECTRICAL CABLE CONNECTORS
3. ELECTRICAL CABLE
4. OPENING IN MIRROR MOUNTING BRACKET AND CAB DOOR
5. TYWRAP

Refer to Figure 49 (See Figure 49, page 51) for Items in parentheses.

14. Remove six pan head torx screws (Item 11) from upper door trim/inner door panel and window regulator assembly (Item 3).

15. Lift upper door trim/inner door panel and window regulator assembly (Item 3) up over door lock control rod (Item 2).

Refer to Figure 51 for Items in parentheses.

16. Hold upper door trim/inner door panel and window regulator assembly (Item 1) away from cab door enough to disconnect two piece control rod (Item 2) from inner door handle (Item 3) to door latch assembly (Item 4). Slide retaining clip (Item 5) off inner door handle control rod (Item 6) and remove it from door latch inner door handle control rod (Item 7).

17. While holding upper door trim/inner door panel and window regulator assembly (Item 1) away from cab door, disconnect cab door courtesy light switch connector (Item 8) from cab door courtesy light switch.

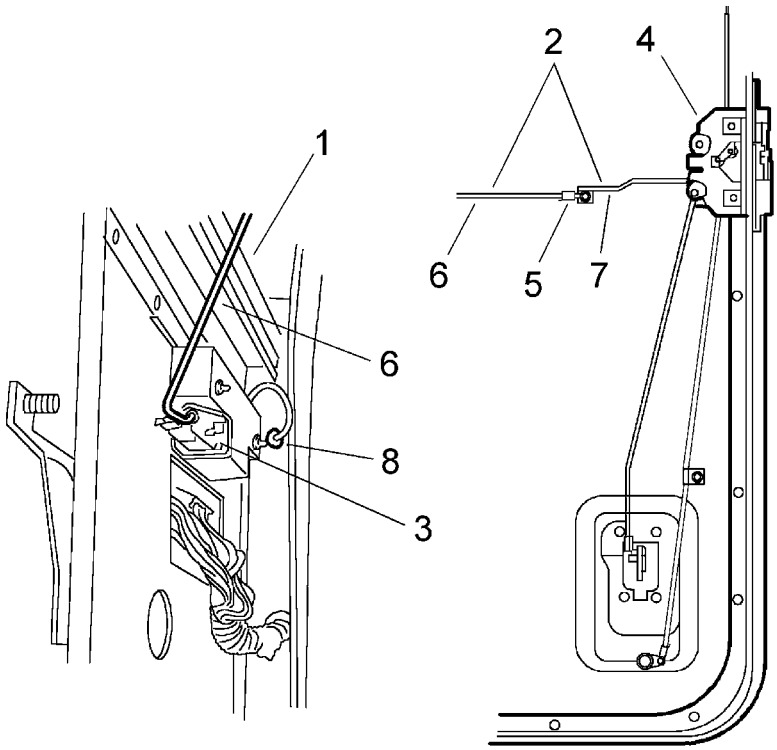

Figure 51 Upper Door Trim/Inner Door Panel and Window Regulator Assembly Connections

1. UPPER DOOR TRIM/INNER DOOR PANEL AND WINDOW REGULATOR ASSEMBLY
2. TWO PIECE CONTROL ROD
3. INNER DOOR HANDLE
4. DOOR LATCH ASSEMBLY
5. RETAINING CLIP
6. INNER DOOR HANDLE CONTROL ROD
7. DOOR LATCH INNER DOOR HANDLE CONTROL ROD
8. CAB DOOR COURTESY LIGHT SWITCH CONNECTOR

Refer to Figure 52 for Items in parentheses.

18. Carefully pull cab door electrical cable (Item 1) through cab door and cab door hinge; each connector will have to be pulled through separately. Also carefully pull mirror electrical cable (Item 2) through opening in mirror mounting bracket and cab door; each connector will have to be pulled through separately. Now upper door trim/inner door panel and window regulator assembly (Item 3) is free of cab door and can be placed out of the way where it will not get damaged. Save for reinstallation.

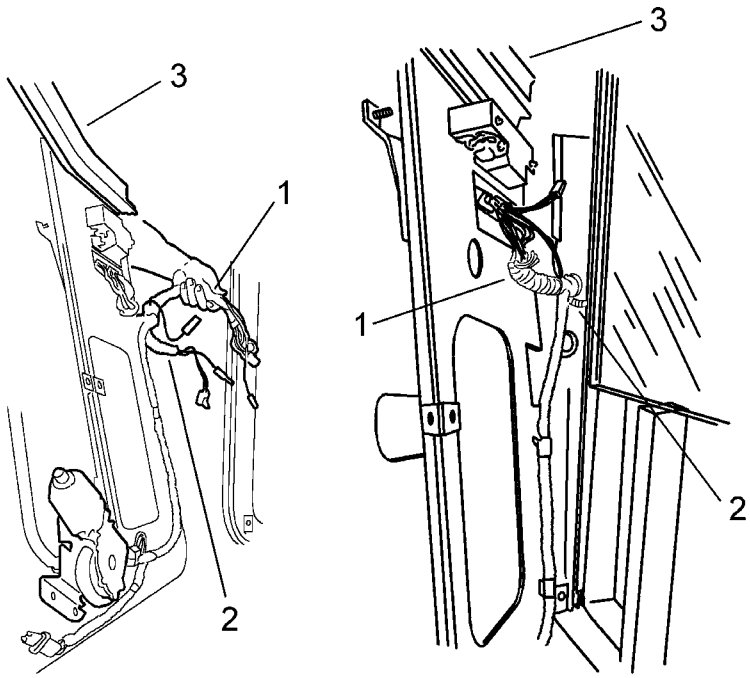

Figure 52 Cab Door and Mirror Electrical Cable

1. CAB DOOR ELECTRICAL CABLE
2. MIRROR ELECTRICAL CABLE
3. UPPER DOOR TRIM/INNER DOOR PANEL AND WINDOW REGULATOR ASSEMBLY

19. If replacing door wiring harness, disconnect connectors to electric door lock actuator and electric door window motor as required, then push the push-in fasteners on wiring harness through upper door trim/inner door panel and window regulator assembly and remove door wiring harness.

4.17. CAB DOOR AND HINGE

Remove Driver Side Cab Door

1. Use a sling or padded chain through top of window opening and attach sling to an overhead hoist to support door.

Refer to Figure 37 (See Figure 37, page 39) for Items in parentheses.

2. To disconnect electrical cable connections from cab to driver side cab door, remove cab front insulator panel (Item 1) under instrument panel by removing two black plastic trim fasteners (Item 2) from top flange, then remove one self tapping pan head screw and washer (Item 3) and remove front insulator panel.

3. Remove two pan head screws (Item 4) and remove dimmer switch (Item 5) to make it easier to remove cab side insulator panel (Item 6).

4. Remove cab side insulator panel (Item 6) on driver side by removing one black plastic trim fastener (Item 7) from top flange, then remove two self tapping pan head screws and washers (Item 8) and remove cab side insulator panel.

Refer to Figure 38 (See Figure 38, page 40) for Items in parentheses.

5. Reach under dash panel near outer cab wall and pull cable assembly down to access electrical cable connectors, disconnect courtesy light connector (Item 1) and CB cable connector (Item 2). If so equipped, disconnect electric window connector (Item 3) and electric door lock connector (Item 4). If vehicle is equipped with heated mirrors and/or electric mirrors, disconnect connectors for them also.

Refer to Figure 39 (See Figure 39, page 41) for Items in parentheses.

6. Once connectors are disconnected, carefully pull electrical cable (Item 1) through side of cab (Item 2), cab hinge pillar (Item 3) and cab hinge pillar grommet (Item 4); each connector will have to be pulled through separately.

Refer to Figure 40 (See Figure 40, page 42) for Items in parentheses.

7. Remove two pan head mach. screws (Item 1) securing cab door check strap (Item 2) to cab door frame (Item 3).

Refer to Figure 53 for Items in parentheses.

8. Remove cab door courtesy light switch (Item 1) by turning cab door courtesy light switch hex nut (Item 2) until cab door courtesy light switch and plastic washer is free from cab door (Item 3) and cab door hinge (Item 4). Pull cab door courtesy light switch out far enough to disconnect cab door courtesy light switch connector (Item 5).

9. Remove six hex flanged head bolts (Item 6) securing cab door hinge (Item 4) to cab door (Item 3) (top three hex flanged head bolts shown). Remove three hex flanged head bolts at bottom of hinge (not shown) and remove door from hinge.

10. Move door to a work bench or other support as required. Cover bench with a material that will not scratch painted surfaces of the door.

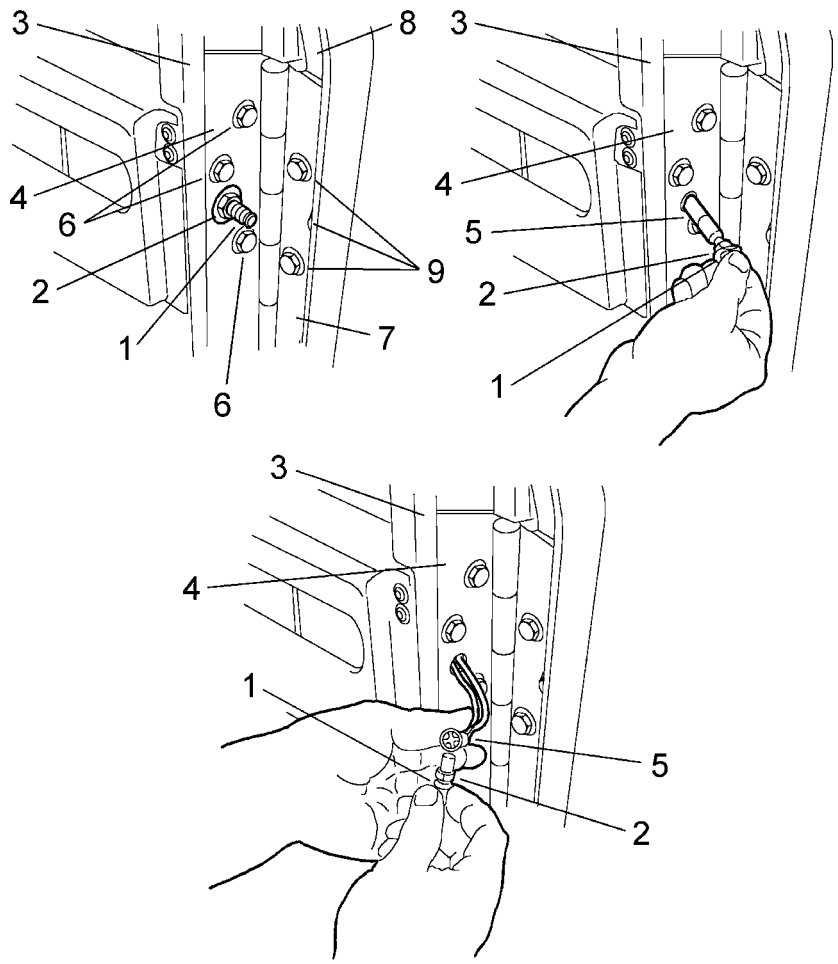

Figure 53 Driver Side Cab Door and Cab Door Hinge

1. CAB DOOR COURTESY LIGHT SWITCH
2. CAB DOOR COURTESY LIGHT SWITCH HEX NUT
3. CAB DOOR
4. CAB DOOR HINGE
5. CAB DOOR COURTESY LIGHT SWITCH CONNECTOR
6. HEX FLANGED HEAD BOLT, 5/16–18 UNC X 1
7. CAB DOOR HINGE
8. CAB HINGE PILLAR
9. HEX FLANGED HEAD BOLT, 5/16–18 UNC X 1

Remove Driver Side Cab Door Hinge

Refer to Figure 53 (See Figure 53, page 56) for Items in parentheses.

1. To remove cab door hinge (Item 7) at cab hinge pillar (Item 8), scribe position of cab door hinge at upper and lower corners of hinge on cab hinge pillar. This will help to position cab door hinge correctly when reinstalling cab door hinge to cab hinge pillar.

2. Remove six hex flanged head bolts (Item 9) securing cab door hinge (Item 7) to cab hinge pillar (Item 8) (top three hex flanged head bolts shown). Remove three hex flanged head bolts at bottom of hinge (not shown) and remove cab door hinge from cab hinge pillar.

Remove Passenger Side Cab Door

1. Use a sling or padded chain through top of window opening and attach sling to an overhead hoist to support door.

Refer to Figure 45 (See Figure 45, page 47) for Items in parentheses.

2. To disconnect electrical cable connections from cab to passenger side cab door, remove cab front insulator panel (Item 1) under instrument panel by removing three black plastic trim fasteners (Item 2) from top flange, then remove four self tapping pan head screws and washers (Item 3) and remove front insulator panel.

3. Remove cab side insulator panel (Item 4) on passenger side by removing two self tapping pan head screws and washer (Item 5).

Refer to Figure 46 (See Figure 46, page 48) for Items in parentheses.

4. Reach under dash panel near outer cab wall and pull cable assembly down to access electrical cable connectors. Disconnect courtesy light connector (Item 1) and CB cable connector (Item 2). If so equipped, disconnect electric window connector (Item 3) and electric door lock connector (Item 4). If vehicle is equipped with heated mirrors and/or electric mirrors, disconnect connectors for them also.

Refer to Figure 47 (See Figure 47, page 49) for Items in parentheses.

5. Once connectors are disconnected, carefully pull electrical cable (Item 1) through side of cab (Item 2), cab hinge pillar (Item 3) and cab hinge pillar grommet (Item 4); each connector will have to be pulled through separately.

Refer to Figure 48 (See Figure 48, page 50) for Items in parentheses.

6. Remove two pan head mach. screws (Item 1) securing cab door check strap (Item 2) to cab door frame (Item 3).

Refer to Figure 54 for Items in parentheses.

7. Remove cab door courtesy light switch (Item 1) by turning cab door courtesy light switch hex nut (Item 2) until cab door courtesy light switch and plastic washer is free from cab door (Item 3) and cab door hinge (Item 4). Pull cab door courtesy light switch out far enough to disconnect cab door courtesy light switch connector (Item 5).

8. Remove six hex flanged head bolts (Item 6) securing cab door hinge (Item 4) to cab door (Item 3) (top three hex flanged head bolts shown). Remove three hex flanged head bolts at bottom of hinge (not shown) and remove door from hinge.

9. Move door to a work bench or other support as required. Cover bench with a material that will not scratch painted surfaces of the door.

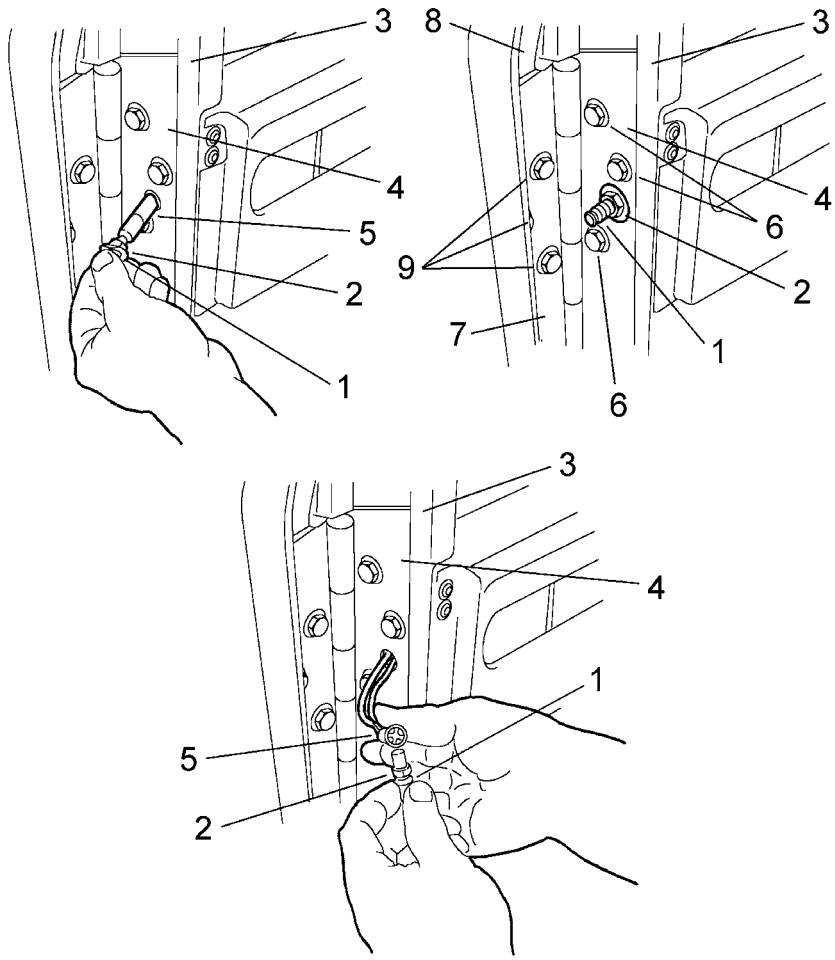

Figure 54 Passenger Side Cab Door and Cab Door Hinge

1. CAB DOOR COURTESY LIGHT SWITCH
2. CAB DOOR COURTESY LIGHT SWITCH HEX NUT
3. CAB DOOR
4. CAB DOOR HINGE
5. CAB DOOR COURTESY LIGHT SWITCH CONNECTOR
6. HEX FLANGED HEAD BOLT, 5/16–18 UNC X 1
7. CAB DOOR HINGE
8. CAB HINGE PILLAR
9. HEX FLANGED HEAD BOLT, 5/16–18 UNC X 1

Remove Passenger Side Cab Door Hinge

Refer to Figure 54 (See Figure 54, page 58) for Items in parentheses.

1. To remove cab door hinge (Item 7) at cab hinge pillar (Item 8), scribe position of cab door hinge at upper and lower corners of hinge on cab hinge pillar. This will help to position cab door hinge correctly when reinstalling cab door hinge to cab hinge pillar.

2. Remove six hex flanged head bolts (Item 9) securing cab door hinge (Item 7) to cab hinge pillar (Item 8) (top three hex flanged head bolts shown). Remove three hex flanged head bolts at bottom of hinge (not shown) and remove cab door hinge from cab hinge pillar.

4.18. INNER DOOR HANDLE

Remove Driver Side Inner Door Handle

1. Remove drive side cab door lower trim panel from cab door. Refer to **CAB DOOR LOWER TRIM PANEL** (See CAB DOOR LOWER TRIM PANEL, page 35)**, Remove Driver Side Cab Door Lower Trim Panel**.

2. Remove driver side upper door trim/inner door panel and window regulator assembly from cab door. Refer to **UPPER DOOR TRIM/INNER DOOR PANEL AND WINDOW REGULATOR ASSEMBLY** (See UPPER DOOR TRIM/INNER DOOR PANEL AND WINDOW REGULATOR ASSEMBLY, page 38)**, Remove Driver Side Upper Door Trim/Inner Door Panel and Window Regulator Assembly**.

3. Once driver side upper door trim/inner door panel and window regulator assembly is removed, place it on a padded work surface.

Refer to Figure 55 for Items in parentheses.

4. Slide retaining clip (Item 1) off inner door handle control rod (Item 2), and remove it from inner door handle (Item 3).

5. Remove two hex nuts and washers (Item 4) from threaded studs and remove inner door handle (Item 3) and inner door handle mounting bracket (Item 5) from upper door trim/inner door panel and window regulator assembly (Item 6). Save for reinstallation.

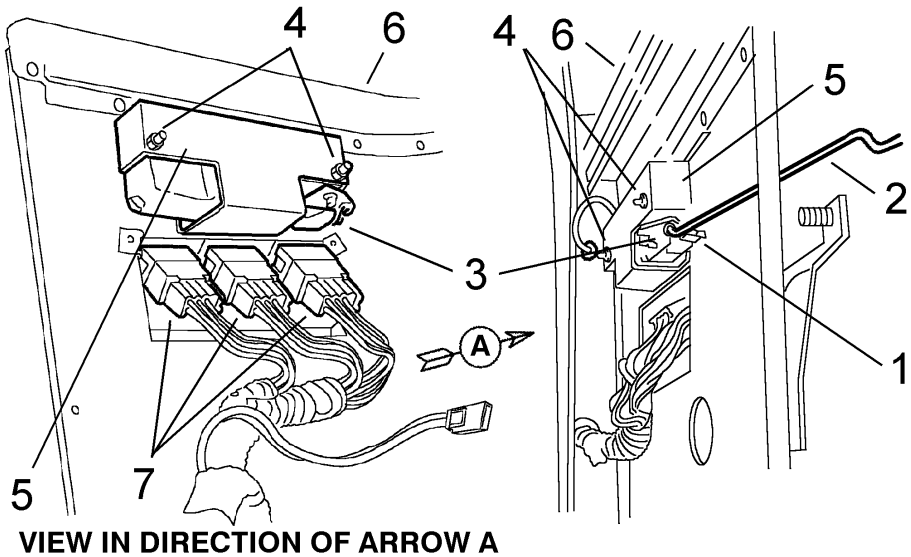

Figure 55 Driver Side Inner Door Handle and Bracket

1. RETAINING CLIP
2. INNER DOOR HANDLE CONTROL ROD
3. INNER DOOR HANDLE
4. HEX NUT AND WASHER
5. INNER DOOR HANDLE MOUNTING BRACKET
6. UPPER DOOR TRIM/INNER DOOR PANEL AND WINDOW REGULATOR ASSEMBLY
7. ELECTRIC WINDOW AND/OR ELECTRIC DOOR LOCK SWITCH CONNECTOR

Remove Passenger Side Inner Door Handle

1. Remove passenger side cab door lower trim panel from cab door. Refer to **CAB DOOR LOWER TRIM PANEL** (See CAB DOOR LOWER TRIM PANEL, page 35)**, Remove Passenger Side Cab Door Lower Trim Panel**.

2. Remove passenger side upper door trim/inner door panel and window regulator assembly from cab door. Refer to **UPPER DOOR TRIM/INNER DOOR PANEL AND WINDOW REGULATOR ASSEMBLY** (See UPPER DOOR TRIM/INNER DOOR PANEL AND WINDOW REGULATOR ASSEMBLY, page 38)**, Remove Passenger Side Upper Door Trim/Inner Door Panel and Window Regulator Assembly**.

3. Once passenger side upper door trim/inner door panel and window regulator assembly is removed, place it on a padded work surface.

Refer to Figure 56 for Items in parentheses.

4. Slide retaining clip (Item 1) off inner door handle control rod (Item 2), and remove it from inner door handle (Item 3).

5. Remove two hex nuts and washers (Item 4) from threaded studs and remove inner door handle (Item 3) and inner door handle mounting bracket (Item 5) from upper door trim/inner door panel and window regulator assembly (Item 6). Save for reinstallation.

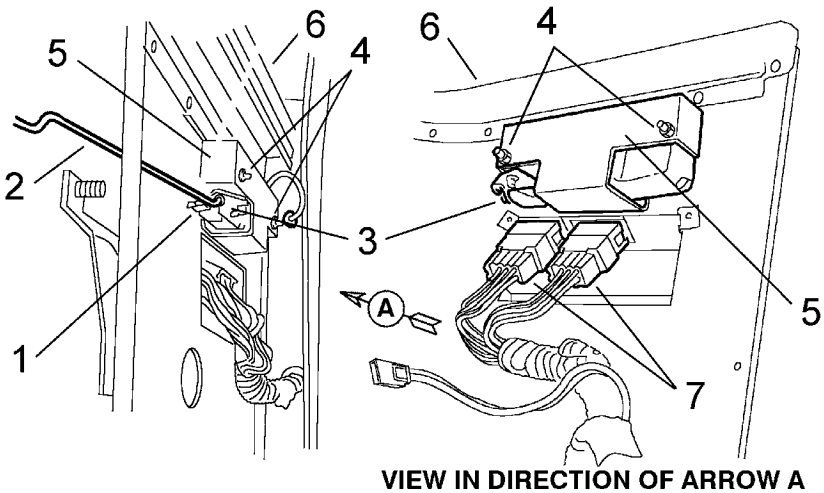

Figure 56 Passenger Side Inner Door Handle and Bracket

1. RETAINING CLIP
2. INNER DOOR HANDLE CONTROL ROD
3. INNER DOOR HANDLE
4. HEX NUT AND WASHER
5. INNER DOOR HANDLE MOUNTING BRACKET
6. UPPER DOOR TRIM/INNER DOOR PANEL AND WINDOW REGULATOR ASSEMBLY
7. ELECTRIC WINDOW AND/OR ELECTRIC DOOR LOCK SWITCH CONNECTOR

4.19. CAB DOOR GRAB HANDLE

Remove Driver Side Cab Door Grab Handle

1. Remove driver side cab door lower trim panel from cab door. Refer to **CAB DOOR LOWER TRIM PANEL** (See CAB DOOR LOWER TRIM PANEL, page 35)**, Remove Driver Side Cab Door Lower Trim Panel**.

2. Remove driver side upper door trim/inner door panel and window regulator assembly from cab door. Refer to **UPPER DOOR TRIM/INNER DOOR PANEL AND WINDOW REGULATOR ASSEMBLY** (See UPPER DOOR TRIM/INNER DOOR PANEL AND WINDOW REGULATOR ASSEMBLY, page 38)**, Remove Driver Side Upper Door Trim/Inner Door Panel and Window Regulator Assembly**.

3. Once driver side upper door trim/inner door panel and window regulator assembly is removed, place it on a padded work surface.

Refer to Figure 57 for Items in parentheses.

4. Remove three hex flanged head bolts (Item 1) from back side of inner door panel (Item 2) and remove cab door grab handle (Item 3) from upper door trim panel (Item 4). Save for reinstallation.

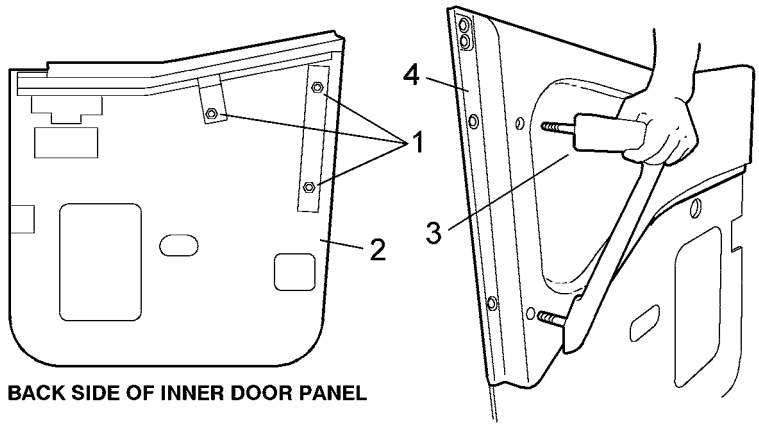

Figure 57 Driver Side Cab Door Grab Handle

1. HEX FLANGED HEAD BOLT, 1/4–28 X 3/4
2. BACK SIDE OF INNER DOOR PANEL
3. CAB DOOR GRAB HANDLE
4. UPPER DOOR TRIM PANEL

Remove Passenger Side Cab Door Grab Handle

1. Remove passenger side cab door lower trim panel from cab door. Refer to **CAB DOOR LOWER TRIM PANEL** (See CAB DOOR LOWER TRIM PANEL, page 35)**, Remove Passenger Side Cab Door Lower Trim Panel** .

2. Remove passenger side upper door trim/inner door panel and window regulator assembly from cab door. Refer to **UPPER DOOR TRIM/INNER DOOR PANEL AND WINDOW REGULATOR ASSEMBLY** (See UPPER DOOR TRIM/INNER DOOR PANEL AND WINDOW REGULATOR ASSEMBLY, page 38)**, Remove Passenger Side Upper Door Trim/Inner Door Panel and Window Regulator Assembly**.

3. Once passenger side upper door trim/inner door panel and window regulator assembly is removed, place it on a padded work surface.

Refer to Figure 58 for Items in parentheses.

4. Remove three hex flanged head bolts (Item 1) from back side of inner door panel (Item 2) and remove cab door grab handle (Item 3) from upper door trim panel (Item 4). Save for reinstallation.

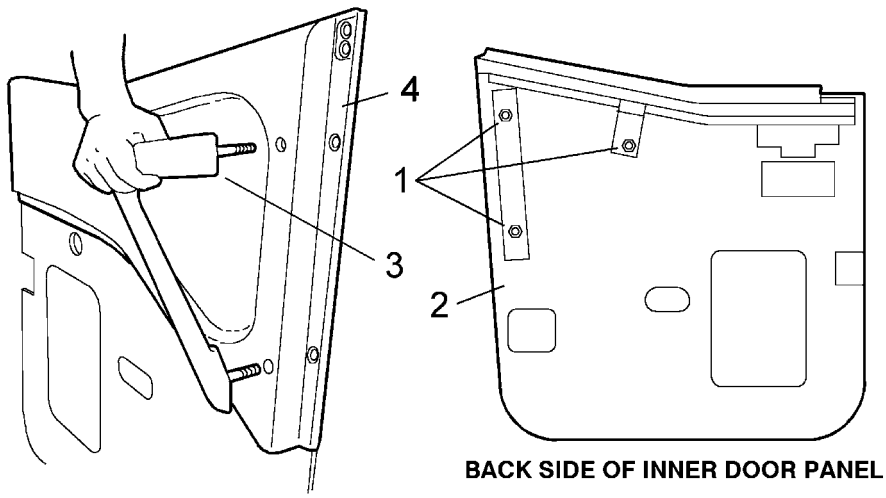

Figure 58 Passenger Side Cab Door Grab Handle

1. HEX FLANGED HEAD BOLT, 1/4–28 X 3/4
2. BACK SIDE OF INNER DOOR PANEL
3. CAB DOOR GRAB HANDLE
4. UPPER DOOR TRIM PANEL

4.20. ELECTRIC WINDOW AND/OR ELECTRIC DOOR LOCK SWITCH ASSEMBLY

Remove Driver Side Electric Window and/or Electric Door Lock Switch Assembly

1. Remove driver side cab door lower trim panel from cab door. Refer to **CAB DOOR LOWER TRIM PANEL** (See CAB DOOR LOWER TRIM PANEL, page 35)**, Remove Driver Side Cab Door Lower Trim Panel** .

2. Remove driver side upper door trim/inner door panel and window regulator assembly from cab door. Refer to **UPPER DOOR TRIM/INNER DOOR PANEL AND WINDOW REGULATOR ASSEMBLY** (See UPPER DOOR TRIM/INNER DOOR PANEL AND WINDOW REGULATOR ASSEMBLY, page 38)**, Remove Driver Side Upper Door Trim/Inner Door Panel and Window Regulator Assembly**.

3. Once driver side upper door trim/inner door panel and window regulator assembly is removed, place it on a padded work surface.

Refer to Figure 59 for Items in parentheses unless otherwise noted.

4. Remove electric window and/or electric door lock switch assembly (Item 1) by removing two pan head mach. screws (Item 2), then disconnect electric window and/or electric door lock switch connectors (Item 7, Figure 55) (See Figure 55, page 60) and remove electric window and/or electric door lock switch assembly from upper door trim panel (Item 3). Save for reinstallation.

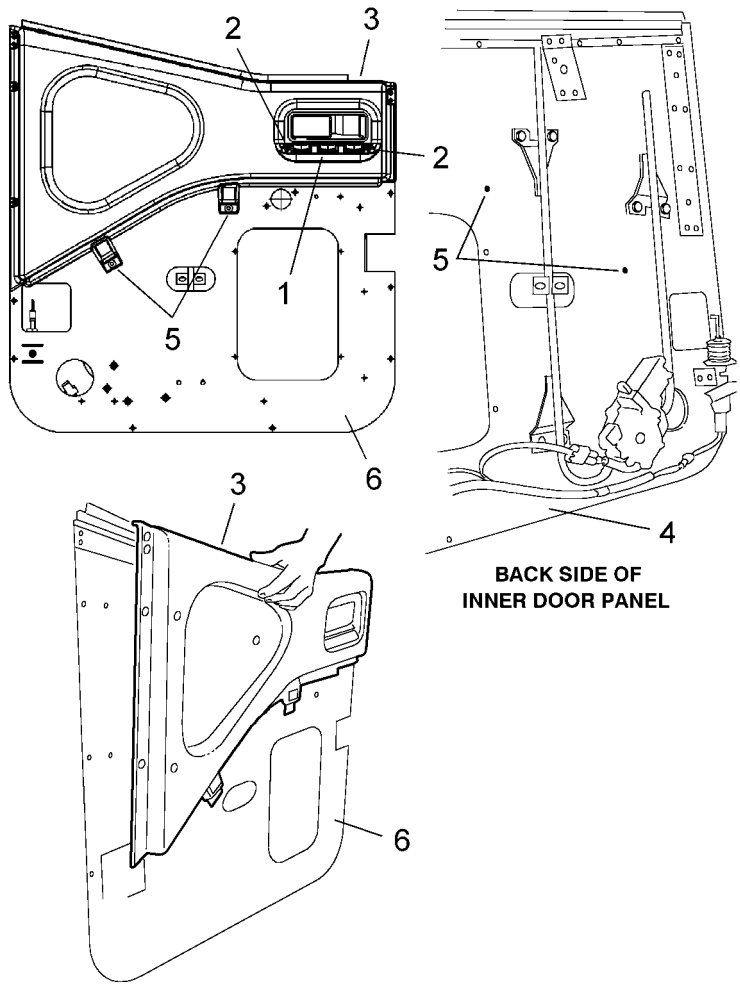

Figure 59 Driver Side Electric Window and/or Electric Door Lock Switch Assembly

1. ELECTRIC WINDOW AND/OR ELECTRIC DOOR LOCK SWITCH ASSEMBLY
2. PAN HEAD MACH. SCREW, NO. 8–18 X 3/4
3. UPPER DOOR TRIM PANEL
4. BACK SIDE OF INNER DOOR PANEL
5. FLAT DOME PINE TREE TRIM PUSH-IN FASTENER
6. FRONT SIDE OF INNER DOOR PANEL

Remove Passenger Side Electric Window and/or Electric Door Lock Switch Assembly

1. Remove passenger side cab door lower trim panel from cab door. Refer to **CAB DOOR LOWER TRIM PANEL** (See CAB DOOR LOWER TRIM PANEL, page 35)**, Remove Passenger Side Cab Door Lower Trim Panel**.

2. Remove passenger side upper door trim/inner door panel and window regulator assembly from cab door. Refer to **UPPER DOOR TRIM/INNER DOOR PANEL AND WINDOW REGULATOR ASSEMBLY** (See UPPER DOOR TRIM/INNER DOOR PANEL AND WINDOW REGULATOR ASSEMBLY, page 38)**, Remove Passenger Side Upper Door Trim/Inner Door Panel and Window Regulator Assembly**.

3. Once passenger side upper door trim/inner door panel and window regulator assembly is removed, place it on a padded work surface.

Refer to Figure 60 for Items in parentheses unless otherwise noted.

4. Remove electric window and/or electric door lock switch assembly (Item 1) by removing two pan head mach. screws (Item 2), then disconnect electric window and/or electric door lock switch connectors (Item 7, Figure 56) (See Figure 56, page 61) and remove electric window and/or electric door lock switch assembly from upper door trim panel (Item 3). Save for reinstallation.

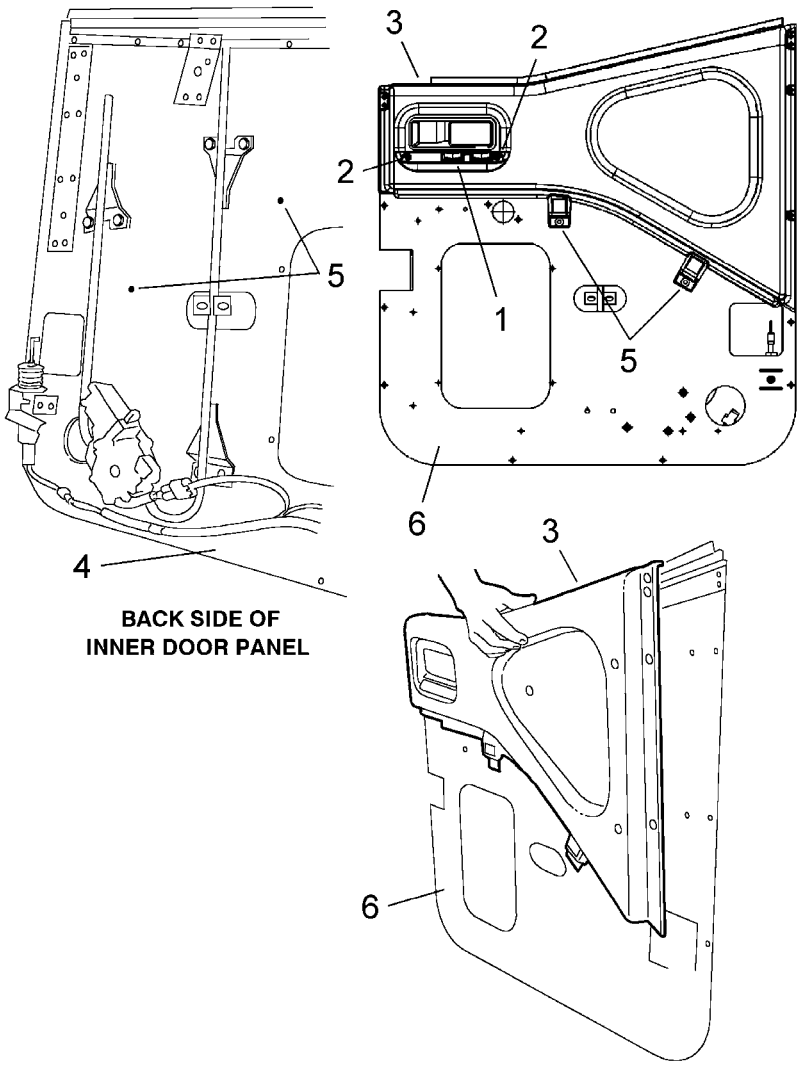

Figure 60 Passenger Side Electric Window and/or Electric Door Lock Switch Assembly

1. ELECTRIC WINDOW AND/OR ELECTRIC DOOR LOCK SWITCH ASSEMBLY
2. PAN HEAD MACH. SCREW, NO. 8–18 X 3/4
3. UPPER DOOR TRIM PANEL
4. BACK SIDE OF INNER DOOR PANEL
5. FLAT DOME PINE TREE TRIM PUSH-IN FASTENER
6. FRONT SIDE OF INNER DOOR PANEL

4.21. UPPER DOOR TRIM PANEL

Remove Driver Side Upper Door Trim Panel

1. Remove driver side cab door lower trim panel from cab door. Refer to **CAB DOOR LOWER TRIM PANEL** (See CAB DOOR LOWER TRIM PANEL, page 35)**, Remove Driver Side Cab Door Lower Trim Panel**.

2. Remove driver side upper door trim/inner door panel and window regulator assembly from cab door. Refer to **UPPER DOOR TRIM/INNER DOOR PANEL AND WINDOW REGULATOR ASSEMBLY** (See UPPER DOOR TRIM/INNER DOOR PANEL AND WINDOW REGULATOR ASSEMBLY, page 38)**, Remove Driver Side Upper Door Trim/Inner Door Panel and Window Regulator Assembly**.

3. Once driver side upper door trim/inner door panel and window regulator assembly is removed, place it on a padded work surface.

4. Remove driver side inner door handle from upper door trim/inner door panel and window regulator assembly. Refer to **INNER DOOR HANDLE** (See INNER DOOR HANDLE, page 59)**, Remove Driver Side Inner Door Handle**.

5. Remove driver side cab door grab handle from upper door trim panel. Refer to **CAB DOOR GRAB HANDLE** (See CAB DOOR GRAB HANDLE, page 61)**, Remove Driver Side Cab Door Grab Handle**.

6. If vehicle is so equipped, remove driver side electric window and/or electric door lock switch assembly from upper door trim panel. Refer to **ELECTRIC WINDOW AND/OR ELECTRIC DOOR LOCK SWITCH ASSEMBLY** (See ELECTRIC WINDOW AND/OR ELECTRIC DOOR LOCK SWITCH ASSEMBLY, page 63)**, Remove Driver Side electric window and/or electric door lock switch assembly**.

Refer to Figure 59 (See Figure 59, page 64) for Items in parentheses.

7. Use a small hammer or handle end of a screw driver and from back side of inner door panel (Item 4) tap two flat dome pine tree trim push-in fasteners (Item 5) through inner door panel and remove upper door trim panel (Item 3) from front side of inner door panel (Item 6). Lay upper door trim panel out of the way and save for reinstallation. This will allow access to mounting hardware securing electric window regulator assembly to inside of inner door panel.

Remove Passenger Side Upper Door Trim Panel

1. Remove passenger side cab door lower trim panel from cab door. Refer to **CAB DOOR LOWER TRIM PANEL** (See CAB DOOR LOWER TRIM PANEL, page 35)**, Remove Passenger Side Cab Door Lower Trim Panel**.

2. Remove passenger side upper door trim/inner door panel and window regulator assembly from cab door. Refer to **UPPER DOOR TRIM/INNER DOOR PANEL AND WINDOW REGULATOR ASSEMBLY** (See UPPER DOOR TRIM/INNER DOOR PANEL AND WINDOW REGULATOR ASSEMBLY, page 38)**, Remove Passenger Side Upper Door Trim/Inner Door Panel and Window Regulator Assembly**.

3. Once passenger side upper door trim/inner door panel and window regulator assembly is removed, place it on a padded work surface.

4. Remove passenger side inner door handle from upper door trim/inner door panel and window regulator assembly. Refer to **INNER DOOR HANDLE** (See INNER DOOR HANDLE, page 59)**, Remove Passenger Side Inner Door Handle**.

5. Remove passenger side cab door grab handle from upper door trim panel. Refer to **CAB DOOR GRAB HANDLE** (See CAB DOOR GRAB HANDLE, page 61)**, Remove Passenger Side Cab Door Grab Handle**.

6. If vehicle is so equipped, remove passenger side electric window and/or electric door lock switch assembly from upper door trim panel. Refer to **ELECTRIC WINDOW AND/OR ELECTRIC DOOR LOCK SWITCH ASSEMBLY** (See ELECTRIC WINDOW AND/OR ELECTRIC DOOR LOCK SWITCH ASSEMBLY, page 63)**, Remove Passenger Side electric window and/or electric door lock switch assembly**.

Refer to Figure 60 (See Figure 60, page 65) for Items in parentheses.

7. Use a small hammer or handle end of a screw driver and from back side of inner door panel (Item 4) tap two flat dome pine tree trim push-in fasteners (Item 5) through inner door panel and remove upper door trim panel (Item 3) from front side of inner door panel (Item 6). Lay upper door trim panel out of the way and save for reinstallation. This will allow access to mounting hardware securing electric window regulator assembly to inside of inner door panel.

4.22. WINDOW REGULATOR ASSEMBLY

Remove Driver Side Electric Window Regulator Assembly with Power Window Motor

1. Remove driver side cab door lower trim panel from cab door. Refer to **CAB DOOR LOWER TRIM PANEL** (See CAB DOOR LOWER TRIM PANEL, page 35)**, Remove Driver Side Cab Door Lower Trim Panel**.

2. Remove driver side upper door trim/inner door panel and window regulator assembly from cab door. Refer to **UPPER DOOR TRIM/INNER DOOR PANEL AND WINDOW REGULATOR ASSEMBLY** (See UPPER DOOR TRIM/INNER DOOR PANEL AND WINDOW REGULATOR ASSEMBLY, page 38)**, Remove Driver Side Upper Door Trim/Inner Door Panel and Window Regulator Assembly**.

3. Once driver side upper door trim/inner door panel and window regulator assembly is removed, place it on a padded work surface.

4. Remove driver side inner door handle from upper door trim/inner door panel and window regulator assembly. Refer to **INNER DOOR HANDLE** (See INNER DOOR HANDLE, page 59)**, Remove Driver Side Inner Door Handle**.

5. Remove driver side cab door grab handle from upper door trim panel. Refer to **CAB DOOR GRAB HANDLE** (See CAB DOOR GRAB HANDLE, page 61)**, Remove Driver Side Cab Door Grab Handle**.

6. If vehicle is so equipped, remove driver side electric window and/or electric door lock switch assembly from upper door trim panel. Refer to **ELECTRIC WINDOW AND/OR ELECTRIC DOOR LOCK SWITCH ASSEMBLY** (See ELECTRIC WINDOW AND/OR ELECTRIC DOOR LOCK SWITCH ASSEMBLY, page 63)**, Remove Driver Side electric window and/or electric door lock switch assembly**.

Refer to Figure 59 (See Figure 59, page 64) for Items in parentheses.

7. Use a small hammer or handle end of a screw driver and from back side of inner door panel (Item 4) tap two flat dome pine tree trim push-in fasteners (Item 5) through inner door panel and remove upper door trim panel (Item 3) from front side of inner door panel (Item 6). Lay upper trim panel out of the way and save for reinstallation. This will allow access to mounting hardware securing electric window regulator assembly to inside of inner door panel.

Refer to Figure 61 for Items in parentheses.

8. Disconnect electric window regulator motor connector (Item 1) from electric window regulator motor (Item 2) on back side of inner door panel (Item 3).

9. Remove ten hex head mach. screws (Item 4) on front side of inner door panel (Item 5) securing electric window regulator assembly (Item 6) to back side of inner door panel (Item 3). Lay electric window regulator assembly out of the way and save for reinstallation if not being replaced.

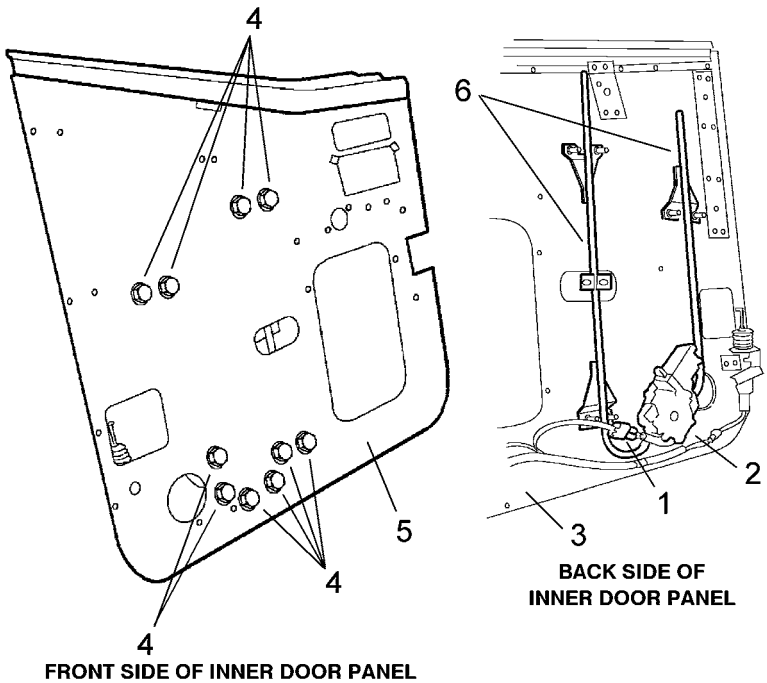

Figure 61 Driver Side Electric Window Regulator Assembly

1. ELECTRIC WINDOW REGULATOR MOTOR CONNECTOR
2. ELECTRIC WINDOW REGULATOR MOTOR
3. BACK SIDE OF INNER DOOR PANEL
4. HEX HEAD MACH. SCREW, 1/4–28 UNF X 3/4
5. FRONT SIDE OF INNER DOOR PANEL
6. ELECTRIC WINDOW REGULATOR ASSEMBLY

Remove Passenger Side Electric Window Regulator Assembly with Power Window Motor

1. Remove passenger side cab door lower trim panel from cab door. Refer to **CAB DOOR LOWER TRIM PANEL** (See CAB DOOR LOWER TRIM PANEL, page 35)**, Remove Passenger Side Cab Door Lower Trim Panel**.

2. Remove passenger side upper door trim/inner door panel and window regulator assembly from cab door. Refer to **UPPER DOOR TRIM/INNER DOOR PANEL AND WINDOW REGULATOR ASSEMBLY** (See UPPER DOOR TRIM/INNER DOOR PANEL AND WINDOW REGULATOR ASSEMBLY, page 38)**, Remove Passenger Side Upper Door Trim/Inner Door Panel and Window Regulator Assembly**.

3. Once passenger side upper door trim/inner door panel and window regulator assembly is removed, place it on a padded work surface.

4. Remove passenger side inner door handle from upper door trim/inner door panel and window regulator assembly. Refer to **INNER DOOR HANDLE** (See INNER DOOR HANDLE, page 59)**, Remove Passenger Side Inner Door Handle**.

5. Remove passenger side cab door grab handle from upper door trim panel. Refer to **CAB DOOR GRAB HANDLE** (See CAB DOOR GRAB HANDLE, page 61)**, Remove Passenger Side Cab Door Grab Handle**.

6. If vehicle is so equipped, remove passenger side electric window and/or electric door lock switch assembly from upper door trim panel. Refer to **ELECTRIC WINDOW AND/OR ELECTRIC DOOR LOCK SWITCH ASSEMBLY** (See ELECTRIC WINDOW AND/OR ELECTRIC DOOR LOCK SWITCH ASSEMBLY, page 63)**, Remove Passenger Side electric window and/or electric door lock switch assembly**.

Refer to Figure 60 (See Figure 60, page 65) for Items in parentheses.

7. Use a small hammer or handle end of a screw driver and from back side of inner door panel (Item 4) tap two flat dome pine tree trim push-in fasteners (Item 5) through inner door panel and remove upper door trim panel (Item 3) from front side of inner door panel (Item 6). Lay upper trim panel out of the way and save for reinstallation. This will allow access to mounting hardware securing electric window regulator assembly to inside of inner door panel.

Refer to Figure 62 for Items in parentheses.

8. Disconnect electric window regulator motor connector (Item 1) from electric window regulator motor (Item 2) on back side of inner door panel (Item 3).

9. Remove ten hex head mach. screws (Item 4) on front side of inner door panel (Item 5) securing electric window regulator assembly (Item 6) to back side of inner door panel (Item 3). Lay electric window regulator assembly out of the way and save for reinstallation if not being replaced.

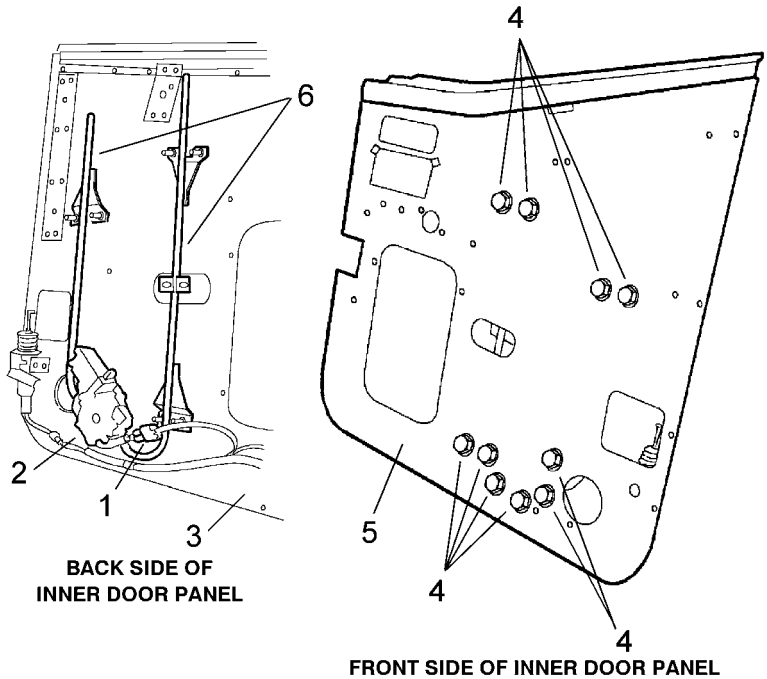

Figure 62 Passenger Side Electric Window Regulator Assembly

1. ELECTRIC WINDOW REGULATOR MOTOR CONNECTOR
2. ELECTRIC WINDOW REGULATOR MOTOR
3. BACK SIDE OF INNER DOOR PANEL
4. HEX HEAD MACH. SCREW, 1/4–28 UNF X 3/4
5. FRONT SIDE OF INNER DOOR PANEL
6. ELECTRIC WINDOW REGULATOR ASSEMBLY

Remove Driver Side Manual Window Regulator Assembly

1. Remove driver side cab door lower trim panel from cab door. Refer to **CAB DOOR LOWER TRIM PANEL** (See CAB DOOR LOWER TRIM PANEL, page 35)**, Remove Driver Side Cab Door Lower Trim Panel**.

2. Remove driver side upper door trim/inner door panel and window regulator assembly from driver side cab door as follows.

Refer to Figure 41 (See Figure 41, page 43) for Items in parentheses.

3. Unscrew door lock knob (Item 1) from door lock control rod (Item 2) sticking through opening in upper door trim/inner door panel and window regulator assembly (Item 3).

Refer to Figure 63 for Items in parentheses.

4. Temporarily slide window regulator handle (Item 1) onto window regulator handle shaft (Item 2). Place a wood block (Item 3), 12.5 inches long, through opening in inner door panel (Item 4) and lower window down against wood block so two hex head mach. screws (Item 5) are accessible through oval opening in center of inner door panel. This will keep window up so it will not fall to the bottom of cab door and will prevent having to try and lift window back into position during installation.

5. Remove two hex head mach. screws (Item 5) securing window regulator assembly (Item 6) to window regulator bracket (Item 7) on the window.

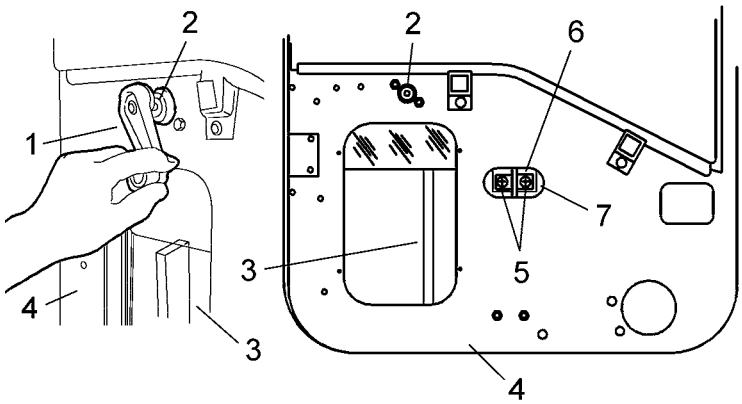

Figure 63 Driver Side Window Regulator Assembly and Window Regulator Bracket

1. WINDOW REGULATOR HANDLE
2. WINDOW REGULATOR HANDLE SHAFT
3. WOOD BLOCK, 12.5 INCHES LONG
4. INNER DOOR PANEL
5. HEX HEAD MACH. SCREWS, 1/4–28 UNF x 3/4
6. WINDOW REGULATOR ASSEMBLY
7. WINDOW REGULATOR BRACKET

Refer to Figure 41 (See Figure 41, page 43) for Items in parentheses.

6. If so equipped, through electric door lock actuator access opening in inner door panel (Item 6). Slide retaining clip (Item 8) off electric door lock control rod from electric door lock actuator (Item 9) and remove it from electric door lock control rod (Item 10).

Refer to Figure 64 for Items in parentheses.

7. Squeeze together tabs on wiring harness push-in fasteners (Item 1) and push them through inner door panel (Item 2) to allow for upper door trim/inner door panel and window regulator assembly (Item 3) removal from cab door.

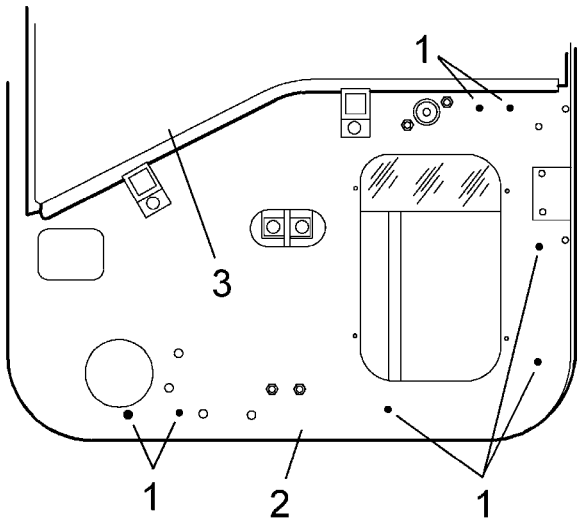

Figure 64 Driver Side Cab Door Wiring Harness on Inner Door Panel

1. WIRING HARNESS PUSH-IN FASTENERS
2. INNER DOOR PANEL
3. UPPER DOOR TRIM/INNER DOOR PANEL AND WINDOW REGULATOR ASSEMBLY

Refer to Figure 41 (See Figure 41, page 43) for Items in parentheses.

8. Remove six pan head torx screws (Item 11) from upper door trim/inner door panel and window regulator assembly (Item 3).

9. Lift driver side upper door trim/inner door panel and window regulator assembly (Item 3) up over door lock control rod (Item 2).

Refer to Figure 65 for Items in parentheses.

10. Hold driver side upper door trim/inner door panel and window regulator assembly (Item 1) away from cab door enough to disconnect two piece control rod (Item 2) from inner door handle (Item 3) to door latch assembly (Item 4). Slide retaining clip (Item 5) off inner door handle control rod (Item 6) and remove it from door latch inner door handle control rod (Item 7).

11. While holding driver side upper door trim/inner door panel and window regulator assembly (Item 1) away from cab door, disconnect cab door courtesy light switch connector (Item 8) from cab door courtesy light switch.

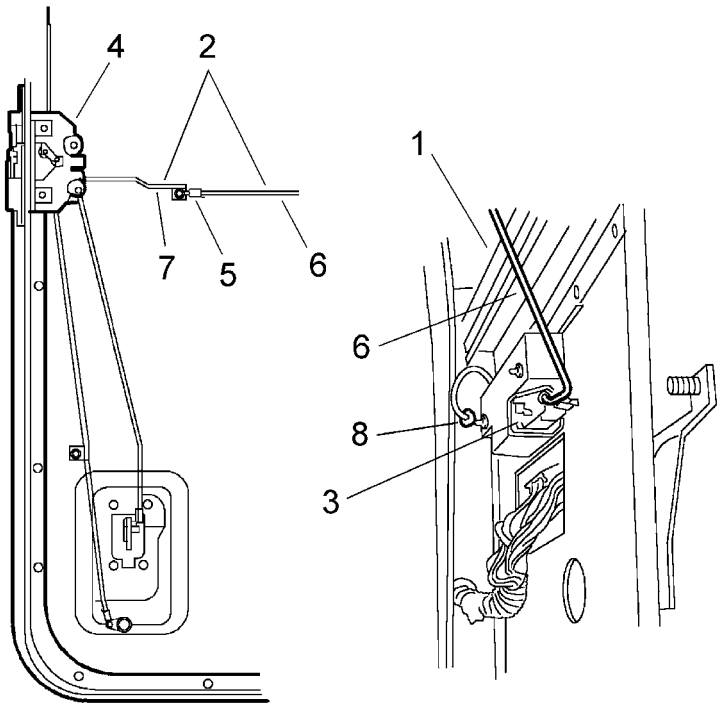

Figure 65 Driver Side Upper Door Trim/Inner Door Panel and Window Regulator Assembly

1. UPPER DOOR TRIM/INNER DOOR PANEL AND WINDOW REGULATOR ASSEMBLY
2. TWO PIECE CONTROL ROD
3. INNER DOOR HANDLE
4. DOOR LATCH ASSEMBLY
5. RETAINING CLIP
6. INNER DOOR HANDLE CONTROL ROD
7. DOOR LATCH INNER DOOR HANDLE CONTROL ROD
8. CAB DOOR COURTESY LIGHT SWITCH CONNECTOR

12. Once driver side upper door trim/inner door panel and window regulator assembly is removed, place it on a padded work surface.

13. Remove driver side inner door handle from driver side upper door trim/inner door panel and window regulator assembly. Refer to **INNER DOOR HANDLE** (See INNER DOOR HANDLE, page 59)**, Remove Driver Side Inner Door Handle**.

14. Remove driver side cab door grab handle from driver side upper door trim panel. Refer to **CAB DOOR GRAB HANDLE** (See CAB DOOR GRAB HANDLE, page 61)**, Remove Driver Side Cab Door Grab Handle**.

Refer to Figure 66 for Items in parentheses.

15. If vehicle is so equipped, remove electric door lock switch assembly (Item 1) by removing two pan head mach. screws (Item 2), then disconnect electric door lock switch connector (Item 3) and remove electric door lock switch assembly from upper door trim panel (Item 4). Save for reinstallation.

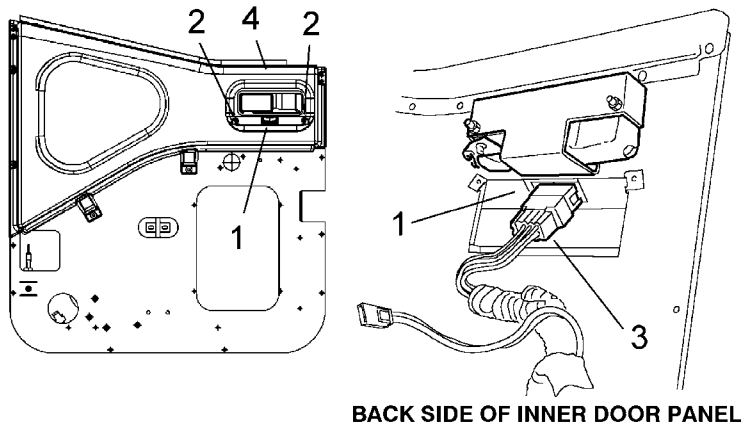

Figure 66 Driver Side Electric Door Lock Switch Assembly

1. ELECTRIC DOOR LOCK SWITCH ASSEMBLY
2. PAN HEAD MACH. SCREW, NO. 8–18 X 3/4
3. ELECTRIC DOOR LOCK SWITCH CONNECTOR
4. UPPER DOOR TRIM PANEL

Refer to Figure 59 (See Figure 59, page 64) for Items in parentheses.

16. Use a small hammer or handle end of a screw driver and from back side of inner door panel (Item 4) tap two flat dome pine tree trim push-in fasteners (Item 5) through inner door panel and remove upper door trim panel (Item 3) from front side of inner door panel (Item 6). Lay upper trim panel out of the way and save for reinstallation. This will allow access to mounting hardware securing electric window regulator assembly to inside of inner door panel.

Refer to Figure 67 for Items in parentheses.

17. Remove six hex head mach. screws (Item 1) on front side of inner door panel (Item 2) securing manual window regulator assembly (Item 3) to back side of inner door panel (Item 4). Lay manual window regulator assembly out of the way and save for reinstallation if not being replaced.

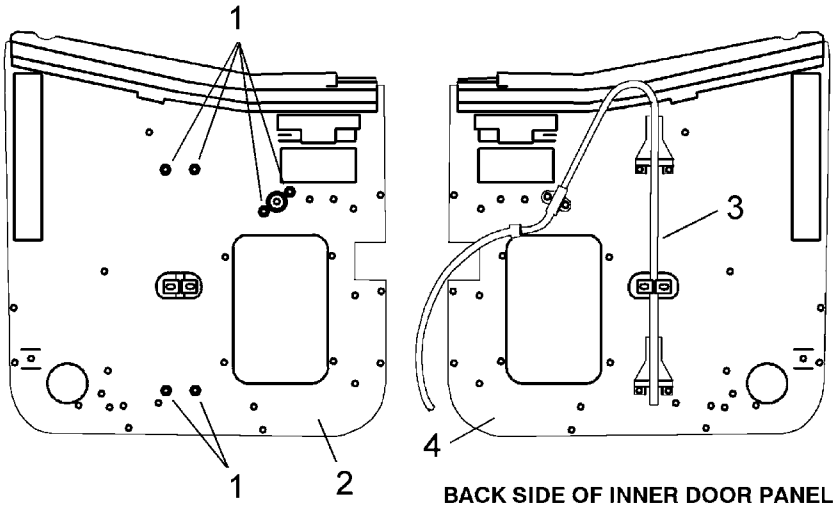

Figure 67 Driver Side Manual Window Regulator Assembly

1. HEX HEAD MACH. SCREW, 1/4–28 UNF X 3/4
2. FRONT SIDE OF INNER DOOR PANEL
3. MANUAL WINDOW REGULATOR ASSEMBLY
4. BACK SIDE OF INNER DOOR PANEL

Remove Passenger Side Manual Window Regulator Assembly

1. Remove passenger side cab door lower trim panel from cab door. Refer to **CAB DOOR LOWER TRIM PANEL** (See CAB DOOR LOWER TRIM PANEL, page 35)**, Remove Passenger Side Cab Door Lower Trim Panel**.

2. Remove passenger side upper door trim/inner door panel and window regulator assembly from passenger side cab door as follows.

Refer to Figure 49 (See Figure 49, page 51) for Items in parentheses.

3. Unscrew door lock knob (Item 1) from door lock control rod (Item 2) sticking through opening in upper door trim/inner door panel and window regulator assembly (Item 3).

Refer to Figure 68 for Items in parentheses.

4. Temporarily slide window regulator handle (Item 1) onto window regulator handle shaft (Item 2). Place a wood block (Item 3), 12.5 inches long, through opening in inner door panel (Item 4) and lower window down against wood block so two hex head mach. screws (Item 5) are accessible through oval opening in center of inner door panel. This will keep window up so it will not fall to the bottom of cab door and will prevent having to try and lift window back into position during installation.

5. Remove two hex head mach. screws (Item 5) securing window regulator assembly (Item 6) to window regulator bracket (Item 7) on the window.

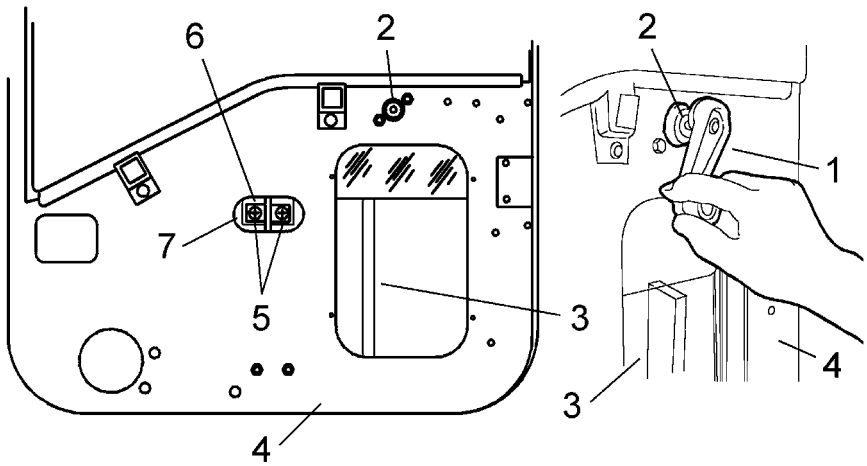

Figure 68 Passenger Side Window Regulator Assembly and Window Regulator Bracket

1. WINDOW REGULATOR HANDLE
2. WINDOW REGULATOR HANDLE SHAFT
3. WOOD BLOCK, 12.5 INCHES LONG
4. INNER DOOR PANEL
5. HEX HEAD MACH. SCREWS, 1/4–28 UNF x 3/4
6. WINDOW REGULATOR ASSEMBLY
7. WINDOW REGULATOR BRACKET

Refer to Figure 49 (See Figure 49, page 51) for Items in parentheses.

6. If so equipped, through electric door lock actuator access opening in inner door panel (Item 6). Slide retaining clip (Item 8) off electric door lock control rod from electric door lock actuator (Item 9) and remove it from electric door lock control rod (Item 10).

Refer to Figure 69 for Items in parentheses.

7. Squeeze together tabs on wiring harness push-in fasteners (Item 1) and push them through inner door panel (Item 2) to allow for upper door trim/inner door panel and window regulator assembly (Item 3) removal from cab door.

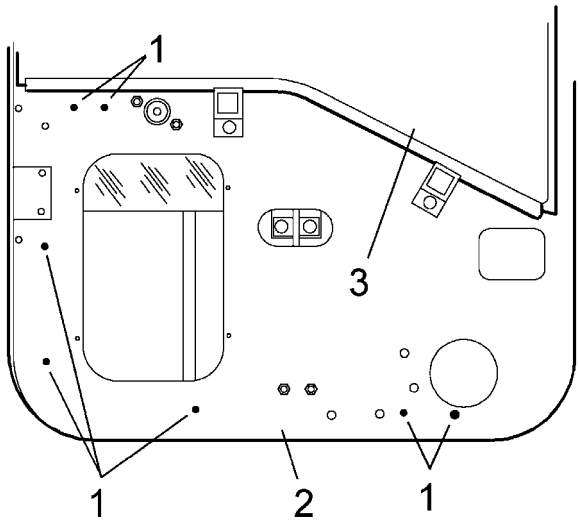

Figure 69 Passenger Side Cab Door Wiring Harness on Inner Door Panel

1. WIRING HARNESS PUSH-IN FASTENERS
2. INNER DOOR PANEL
3. UPPER DOOR TRIM/INNER DOOR PANEL AND WINDOW REGULATOR ASSEMBLY

Refer to Figure 49 (See Figure 49, page 51) for Items in parentheses.

8. Remove six pan head torx screws (Item 11) from upper door trim/inner door panel and window regulator assembly (Item 3).

9. Lift passenger side upper door trim/inner door panel and window regulator assembly (Item 3) up over door lock control rod (Item 2).

Refer to Figure 70 for Items in parentheses.

10. Hold passenger side upper passenger side door trim/inner door panel and window regulator assembly (Item 1) away from cab door enough to disconnect two piece control rod (Item 2) from inner door handle (Item 3) to door latch assembly (Item 4). Slide retaining clip (Item 5) off inner door handle control rod (Item 6) and remove it from door latch inner door handle control rod (Item 7).

11. While holding passenger side upper passenger side door trim/inner door panel and window regulator assembly (Item 1) away from cab door, disconnect cab door courtesy light switch connector (Item 8) from cab door courtesy light switch.

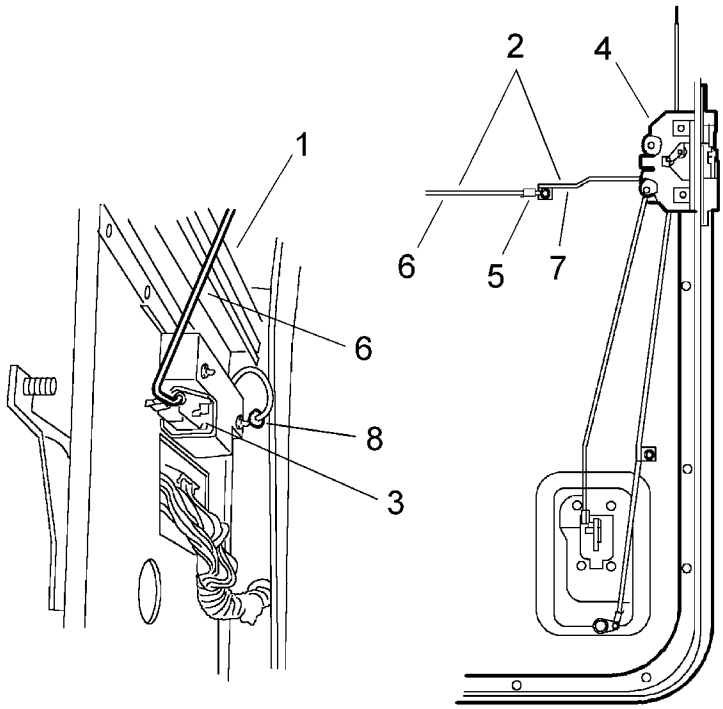

Figure 70 Passenger Side Upper Door Trim/Inner Door Panel and Window Regulator Assembly

1. UPPER DOOR TRIM/INNER DOOR PANEL AND WINDOW REGULATOR ASSEMBLY
2. TWO PIECE CONTROL ROD
3. INNER DOOR HANDLE
4. DOOR LATCH ASSEMBLY
5. RETAINING CLIP
6. INNER DOOR HANDLE CONTROL ROD
7. DOOR LATCH INNER DOOR HANDLE CONTROL ROD
8. CAB DOOR COURTESY LIGHT SWITCH CONNECTOR

12. Once passenger side upper door trim/inner door panel and window regulator assembly is removed, place it on a padded work surface.

13. Remove passenger side inner door handle from passenger side upper door trim/inner door panel and window regulator assembly. Refer to **INNER DOOR HANDLE** (See INNER DOOR HANDLE, page 59)**, Remove Passenger Side Inner Door Handle**.

14. Remove passenger side cab door grab handle from passenger side upper door trim panel. Refer to **CAB DOOR GRAB HANDLE** (See CAB DOOR GRAB HANDLE, page 61)**, Remove Passenger Side Cab Door Grab Handle**.

Refer to Figure 71 for Items in parentheses.

15. If vehicle is so equipped, remove electric door lock switch assembly (Item 1) by removing two pan head mach. screws (Item 2), then disconnect electric door lock switch connector (Item 3) and remove electric door lock switch assembly from upper door trim panel (Item 4). Save for reinstallation.

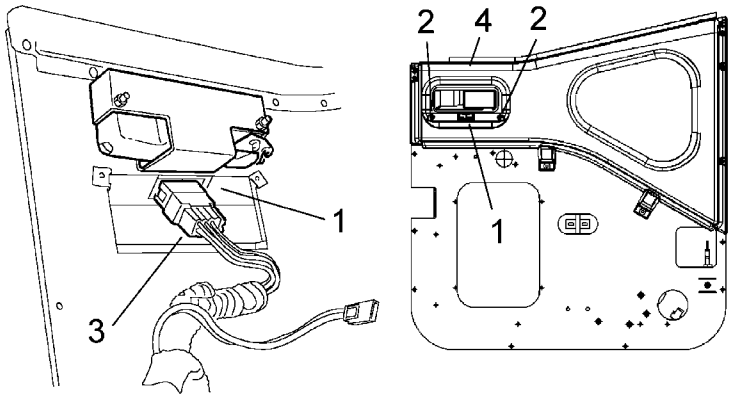

BACK SIDE OF INNER DOOR PANEL

Figure 71 Passenger Side Electric Door Lock Switch Assembly

1. ELECTRIC DOOR LOCK SWITCH ASSEMBLY
2. PAN HEAD MACH. SCREW, NO. 8–18 X 3/4
3. ELECTRIC DOOR LOCK SWITCH CONNECTOR
4. UPPER DOOR TRIM PANEL

Refer to Figure 60 (See Figure 60, page 65) for Items in parentheses.

16. Use a small hammer or handle end of a screw driver and from back side of inner door panel (Item 4) tap two flat dome pine tree trim push-in fasteners (Item 5) through inner door panel and remove upper door trim panel (Item 3) from front side of inner door panel (Item 6). Lay upper trim panel out of the way and save for reinstallation. This will allow access to mounting hardware securing electric window regulator assembly to inside of inner door panel.

Refer to Figure 72 for Items in parentheses.

17. Remove six hex head mach. screws (Item 1) on front side of inner door panel (Item 2) securing manual window regulator assembly (Item 3) to back side of inner door panel (Item 4). Lay manual window regulator assembly out of the way and save for reinstallation if not being replaced.

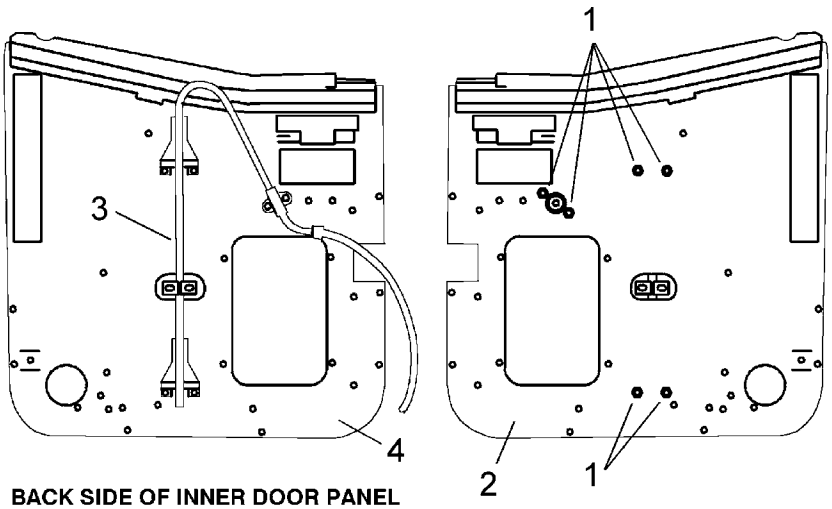

Figure 72 Passenger Side Manual Window Regulator Assembly

1. HEX HEAD MACH. SCREW, 1/4–28 UNF X 3/4
2. FRONT SIDE OF INNER DOOR PANEL
3. MANUAL WINDOW REGULATOR ASSEMBLY
4. BACK SIDE OF INNER DOOR PANEL

4.23. CAB DOOR WINDOW GLASS AND FRONT RUN CHANNEL

Remove Driver Side Cab Door Window Glass and Front Run Channel

1. Remove driver side cab door lower trim panel from cab door. Refer to **CAB DOOR LOWER TRIM PANEL** (See CAB DOOR LOWER TRIM PANEL, page 35)**, Remove Driver Side Cab Door Lower Trim Panel**.

2. Remove driver side upper door trim/inner door panel and window regulator assembly from cab door. Refer to **UPPER DOOR TRIM/INNER DOOR PANEL AND WINDOW REGULATOR ASSEMBLY** (See UPPER DOOR TRIM/INNER DOOR PANEL AND WINDOW REGULATOR ASSEMBLY, page 38)**, Remove Driver Side Upper Door Trim/Inner Door Panel and Window Regulator Assembly**.

3. Once driver side upper door trim/inner door panel and window regulator assembly is removed, place it on a padded work surface.

> CAUTION – **To prevent damage to the door while fully open, reinstall the door check strap.**

Refer to Figure 73 (See Figure 73, page 82) for Items in parentheses.

4. Remove two pan head mach. screws (Item 1) securing window glass front run channel bracket (Item 2) to bottom of cab door (Item 3).

5. Remove wood block (Item 4) used to hold cab door window glass (Item 5) up. Lower window glass to bottom of cab door. Pull the bottom of window glass front run channel and mounting bracket (Items 6 and 2) out and push forward slightly. Slide window glass out of front window glass run channel (Item 6), then slide

window glass up and out of rear window glass run channel (Item 7) to remove window glass from cab door. Lay cab door window glass on padded work surface and save for reinstallation, unless being replaced.

If it is necessary to remove **WINDOW GLASS FRONT RUN CHANNEL** and **FRONT RUN CHANNEL FILLER CORNER** (Items 6 and 8) from cab door, follow Steps 6 and 7 below.

6. Use a small pick and pull material out of channel of window glass front run channel (Item 6) at front run channel filler corner (Item 8); this will expose two pan head self-tapping mach. screws (Item 9) in front run channel filler corner.

7. Remove two pan head self-tapping mach. screws (Item 9) from front run channel filler corner (Item 8) and remove window glass front run channel and front run channel filler corner (Items 6 and 8) from cab door frame. Save for reinstallation, unless being replaced.

8. If replacing window glass front run channel (Item 6), remove one pan head mach. screw (Item 10) and remove window glass front run channel bracket (Item 2). Save for installation on new window glass front run channel.

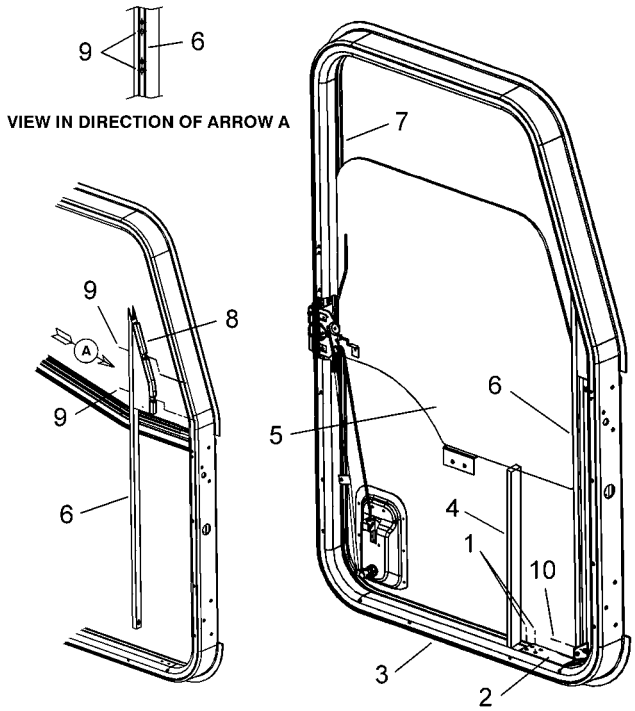

Figure 73 Driver Side Cab Door Window Glass and Front Run Channel

1. PAN HEAD MACH. SCREW, 1/4–20 X 5/8
2. WINDOW GLASS FRONT RUN CHANNEL BRACKET
3. CAB DOOR
4. WOOD BLOCK, 12.5 INCHES LONG
5. CAB DOOR WINDOW GLASS
6. WINDOW GLASS FRONT RUN CHANNEL
7. WINDOW GLASS REAR RUN CHANNEL
8. FRONT RUN CHANNEL FILLER CORNER
9. PAN HEAD SELF-TAPPING MACH. SCREW, NO. 10–16 X 1
10. PAN HEAD MACH. SCREW, 1/4–20 X 5/8

Remove Passenger Side Cab Door Window Glass and Front Run Channel

1. Remove passenger side cab door lower trim panel from cab door. Refer to **CAB DOOR LOWER TRIM PANEL** (See CAB DOOR LOWER TRIM PANEL, page 35)**, Remove Passenger Side Cab Door Lower Trim Panel**.

2. Remove passenger side upper door trim/inner door panel and window regulator assembly from cab door. Refer to **UPPER DOOR TRIM/INNER DOOR PANEL AND WINDOW REGULATOR ASSEMBLY** (See UPPER DOOR TRIM/INNER DOOR PANEL AND WINDOW REGULATOR ASSEMBLY, page 38)**, Remove Passenger Side Upper Door Trim/Inner Door Panel and Window Regulator Assembly**.

3. Once passenger side upper door trim/inner door panel and window regulator assembly is removed, place it on a padded work surface.

CAUTION – To prevent damage to the door while fully open, reinstall the door check strap.

Refer to Figure 74 (See Figure 74, page 84) for Items in parentheses.

4. Remove two pan head mach. screws (Item 1) securing window glass front run channel bracket (Item 2) to bottom of cab door (Item 3).

5. Remove wood block (Item 4) used to hold cab door window glass (Item 5) up. Lower window glass to bottom of cab door. Pull the bottom of window glass front run channel and mounting bracket (Items 6 and 2) out and push forward slightly. Slide window glass out of front window glass run channel (Item 6), then slide window glass up and out of rear window glass run channel (Item 7) to remove window glass from cab door. Lay cab door window glass on padded work surface and save for reinstallation, unless being replaced.

If it is necessary to remove **WINDOW GLASS FRONT RUN CHANNEL** and **FRONT RUN CHANNEL FILLER CORNER** (Items 6 and 8) from cab door, follow Steps 6 and 7 below.

6. Use a small pick and pull material out of channel of window glass front run channel (Item 6) at front run channel filler corner (Item 8); this will expose two pan head self-tapping mach. screws (Item 9) in front run channel filler corner.

7. Remove two pan head self-tapping mach. screws (Item 9) from front run channel filler corner (Item 8) and remove window glass front run channel and front run channel filler corner (Items 6 and 8) from cab door frame. Save for reinstallation, unless being replaced.

8. If replacing window glass front run channel (Item 6), remove one pan head mach. screw (Item 10) and remove window glass front run channel bracket (Item 2). Save for installation on new window glass front run channel.

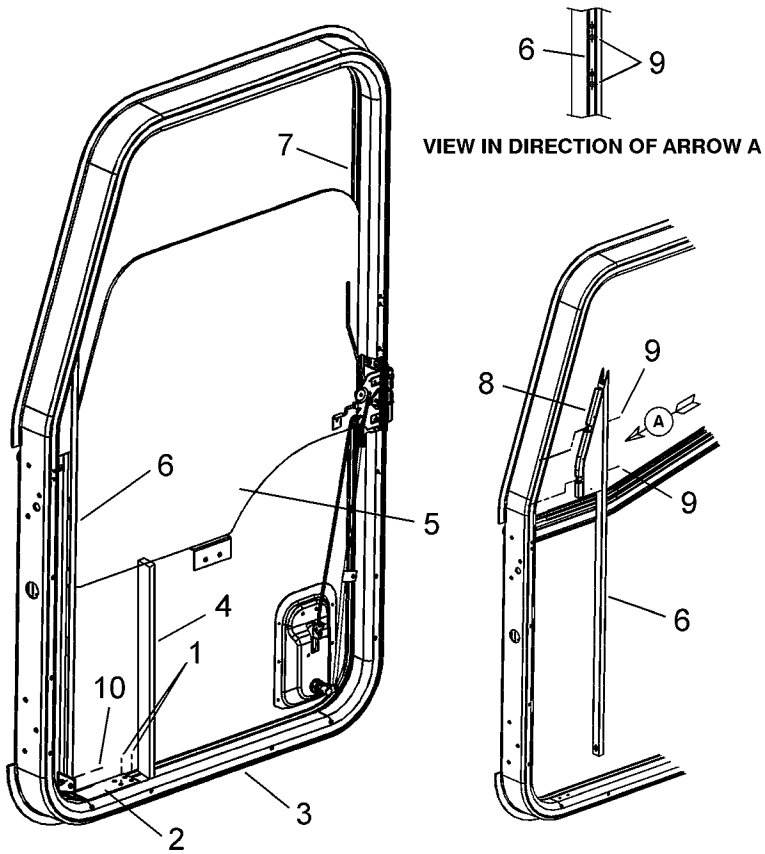

Figure 74 Passenger Side Cab Door Window Glass and Front Run Channel

1. PAN HEAD MACH. SCREW, 1/4–20 X 5/8
2. WINDOW GLASS FRONT RUN CHANNEL BRACKET
3. CAB DOOR
4. WOOD BLOCK, 12.5 INCHES LONG
5. CAB DOOR WINDOW GLASS
6. WINDOW GLASS FRONT RUN CHANNEL
7. WINDOW GLASS REAR RUN CHANNEL
8. FRONT RUN CHANNEL FILLER CORNER
9. PAN HEAD SELF-TAPPING MACH. SCREW, NO. 10–16 X 1
10. PAN HEAD MACH. SCREW, 1/4–20 X 5/8

4.24. REMOVE CAB DOOR LATCH ASSEMBLY

If removing **DRIVER SIDE CAB DOOR LATCH ASSEMBLY** follow Steps 1, 2 and 3 below to gain access to inside of door.

1. Remove driver side cab door lower trim panel from cab door. Refer to **CAB DOOR LOWER TRIM PANEL** (See CAB DOOR LOWER TRIM PANEL, page 35)**, Remove Driver Side Cab Door Lower Trim Panel**.

2. Remove driver side upper door trim/inner door panel and window regulator assembly from cab door. Refer to **UPPER DOOR TRIM/INNER DOOR PANEL AND WINDOW REGULATOR ASSEMBLY** (See UPPER DOOR TRIM/INNER DOOR PANEL AND WINDOW REGULATOR ASSEMBLY, page 38)**, Remove Driver Side Upper Door Trim/Inner Door Panel and Window Regulator Assembly**.

3. Once driver side upper door trim/inner door panel and window regulator assembly is removed, place it on a padded work surface and continue with Step 7 below.

If removing **PASSENGER SIDE CAB DOOR LATCH ASSEMBLY** follow Steps 4, 5 and 6 below to gain access to inside of door.

4. Remove passenger side cab door lower trim panel from cab door. Refer to **CAB DOOR LOWER TRIM PANEL** (See CAB DOOR LOWER TRIM PANEL, page 35)**, Remove Passenger Side Cab Door Lower Trim Panel**.

5. Remove passenger side upper door trim/inner door panel and window regulator assembly from cab door. Refer to **UPPER DOOR TRIM/INNER DOOR PANEL AND WINDOW REGULATOR ASSEMBLY** (See UPPER DOOR TRIM/INNER DOOR PANEL AND WINDOW REGULATOR ASSEMBLY, page 38)**, Remove Passenger Side Upper Door Trim/Inner Door Panel and Window Regulator Assembly**.

6. Once passenger side upper door trim/inner door panel and window regulator assembly is removed, place it on a padded work surface and continue with Step 7 below.

Refer to Figure 75 (See Figure 75, page 86) for Items in parentheses.

CAUTION – To prevent damage to the door while fully open, reinstall the door check strap.

7. Slide retaining clip (Item 1) off inner cab door handle control rod (Item 2) and remove inner cab door handle control rod from cab door latch assembly (Item 3), driver side shown.

8. Slide retaining clip (Item 4) off door lock button control rod (Item 5) and remove door lock button control rod from cab door latch assembly (Item 3), driver side shown.

9. Slide retaining clip (Item 6) off outer cab door handle control rod (Item 7) and remove outer cab door handle control rod from cab door latch assembly (Item 3), driver side shown.

10. Slide retaining clip (Item 8) off door key lock control rod (Item 9) and remove door key lock control rod from cab door latch assembly (Item 3), driver side shown.

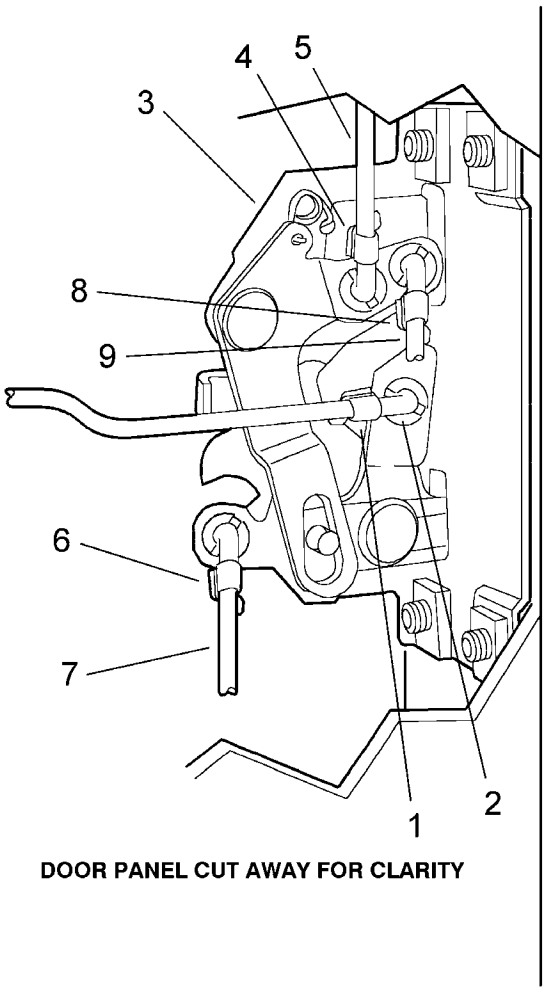

Figure 75 Driver Side Cab Door Latch Control Rods

1. RETAINING CLIP
2. INNER CAB DOOR HANDLE CONTROL ROD
3. CAB DOOR LATCH ASSEMBLY
4. RETAINING CLIP
5. DOOR LOCK BUTTON CONTROL ROD
6. RETAINING CLIP
7. OUTER CAB DOOR HANDLE CONTROL ROD
8. RETAINING CLIP
9. DOOR KEY LOCK CONTROL ROD

Refer to Figure 76 for Items in parentheses.

11. Remove four mounting screws (Item 1) securing the inside and outside cab door latch assemblies (Item 2) to cab door, driver side shown.

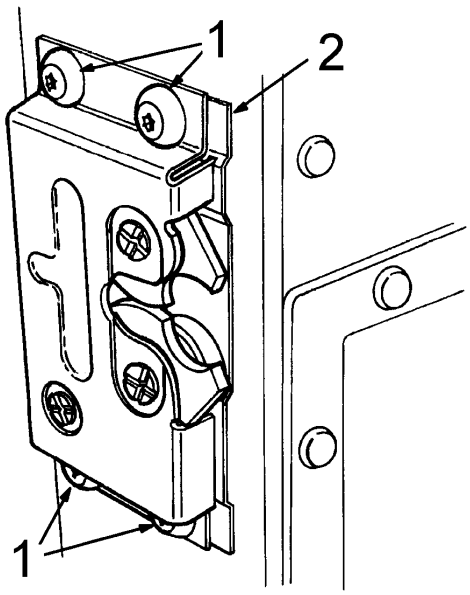

Figure 76 Driver Side Cab Door Latch Screws

1. MOUNTING SCREWS
2. CAB DOOR LATCH ASSEMBLY

4.25. REMOVE CAB DOOR STRIKER PIN

Refer to Figure 77 (See Figure 77, page 88) for Items in parentheses unless otherwise noted.

Cab door striker pin (Item 1) mounted on cab lock pillar (Item 2) provides for positive engagement with cab door latch assembly (Item 2, Figure 76) (See Figure 76, page 87). Door striker pin removal requires a torx head tool (Item 3). Enlarged mounting hole in cab lock pillar permits adjustment.

Refer to Figure 77 for Items in parentheses.

1. Use a torx head tool (Item 3) to remove cab door striker pin (Item 1) from cab lock pillar (Item 2), driver side shown.

2. If spacer shims (Item 4) are used between cab door striker pin (Item 1) and cab lock pillar (Item 2), save and reuse during installation, driver side shown.

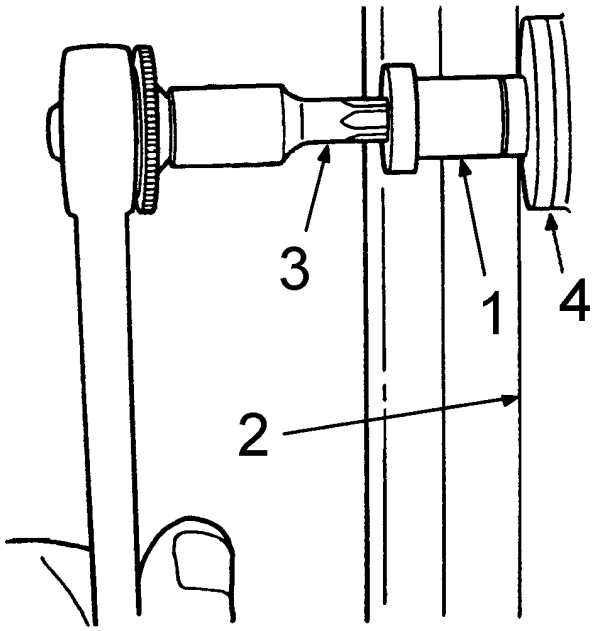

Figure 77 Driver Side Cab Door Striker Pin

1. CAB DOOR STRIKER PIN, 34 TO 50 Lbf-ft (46 TO 68 N•m)
2. CAB LOCK PILLAR
3. TORX HEAD TOOL
4. SPACER SHIM

4.26. REMOVE DOOR LOCK ASSEMBLY

Door locks and console-mounted key switch are coded the same so that one key will operate all three cylinders. The code number is stamped on the key switch body just in back of the cap nut. The code number does not appear on door the lock assembly.

To REPLACE the door lock, you must replace the complete assembly. The tumbler unit is not removable. If you must replace one door lock, replace both of them with matching locks.

If removing **DRIVER SIDE DOOR LOCK ASSEMBLY** follow steps 1, 2 and 3 below to gain access to inside of door.

1. Remove driver side cab door lower trim panel from cab door. Refer to **CAB DOOR LOWER TRIM PANEL** (See CAB DOOR LOWER TRIM PANEL, page 35)**, Remove Driver Side Cab Door Lower Trim Panel**.

2. Remove driver side upper door trim/inner door panel and window regulator assembly from cab door. Refer to **UPPER DOOR TRIM/INNER DOOR PANEL AND WINDOW REGULATOR ASSEMBLY** (See UPPER DOOR TRIM/INNER DOOR PANEL AND WINDOW REGULATOR ASSEMBLY, page 38)**, Remove Driver Side Upper Door Trim/Inner Door Panel and Window Regulator Assembly**.

3. Once driver side upper door trim/inner door panel and window regulator assembly is removed, place it on a padded work surface and continue with Step 7 below.

If removing **PASSENGER SIDE DOOR LOCK ASSEMBLY** follow Steps 4, 5 and 6 below to gain access to inside of door.

4. Remove passenger side cab door lower trim panel from cab door. Refer to **CAB DOOR LOWER TRIM PANEL** (See CAB DOOR LOWER TRIM PANEL, page 35)**, Remove Passenger Side Cab Door Lower Trim Panel**.

5. Remove passenger side upper door trim/inner door panel and window regulator assembly from cab door. Refer to **UPPER DOOR TRIM/INNER DOOR PANEL AND WINDOW REGULATOR ASSEMBLY** (See UPPER DOOR TRIM/INNER DOOR PANEL AND WINDOW REGULATOR ASSEMBLY, page 38)**, Remove Passenger Side Upper Door Trim/Inner Door Panel and Window Regulator Assembly**.

6. Once passenger side upper door trim/inner door panel and window regulator assembly is removed, place it on a padded work surface and continue with Step 7 below.

Refer to Figure 78 for Items in parentheses.

CAUTION – To prevent damage to the door while fully open, reinstall the door check strap.

7. Slide retaining clip (Item 1) and remove lock control rod (Item 2) from the door lock cylinder assembly (Item 3), driver side shown.

8. Pull lock cylinder retainer clip (Item 4) from door lock cylinder assembly (Item 3), driver side shown.

9. Rotate door lock cylinder assembly (Item 3) slightly, then remove it from the cab door (Item 5), driver side shown.

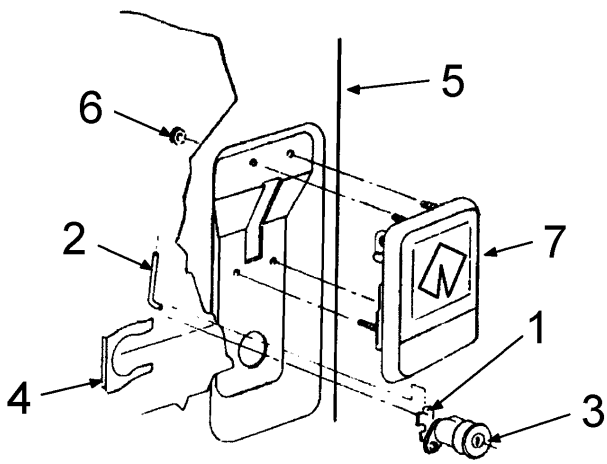

Figure 78 Driver Side Door Lock Assembly and Outer Door Handle Assembly

1. RETAINING CLIP
2. LOCK CONTROL ROD
3. DOOR LOCK CYLINDER ASSEMBLY
4. LOCK CYLINDER RETAINER CLIP
5. CAB DOOR
6. HEX NUT WITH WASHER
7. OUTER DOOR HANDLE ASSEMBLY

4.27. REMOVE OUTER DOOR HANDLE

The outer door handle assembly (Item 1, Figure 79) is a combination handle and lever. It is connected by control rods to the latch assembly mechanism, and actuates the latch jaws. You can remove the outer door handle without removing the latch assembly.

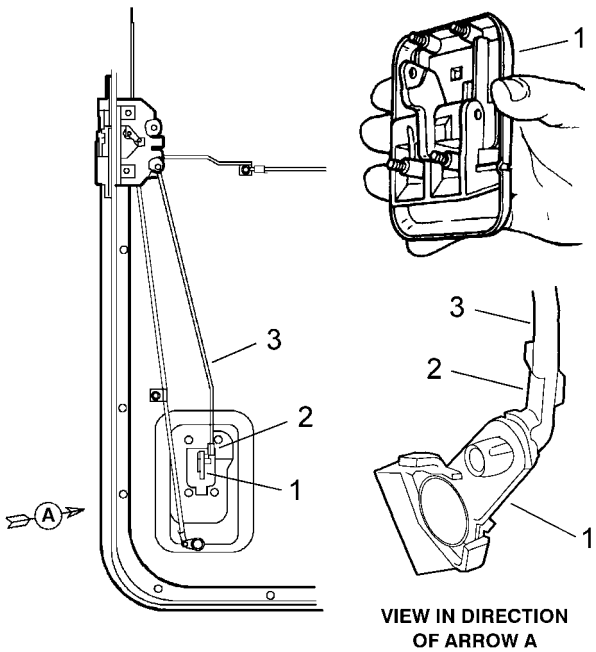

Figure 79 Driver Side Outer Door Handle Control Rod

1. OUTER DOOR HANDLE ASSEMBLY
2. RETAINING CLIP
3. OUTER DOOR HANDLE CONTROL ROD

If removing **DRIVER SIDE OUTER DOOR HANDLE ASSEMBLY** follow Steps 1, 2 and 3 below to gain access to inside of door.

1. Remove driver side cab door lower trim panel from cab door. Refer to **CAB DOOR LOWER TRIM PANEL** (See CAB DOOR LOWER TRIM PANEL, page 35)**, Remove Driver Side Cab Door Lower Trim Panel**.

2. Remove driver side upper door trim/inner door panel and window regulator assembly from cab door. Refer to **UPPER DOOR TRIM/INNER DOOR PANEL AND WINDOW REGULATOR ASSEMBLY** (See UPPER DOOR TRIM/INNER DOOR PANEL AND WINDOW REGULATOR ASSEMBLY, page 38)**, Remove Driver Side Upper Door Trim/Inner Door Panel and Window Regulator Assembly**.

3. Once driver side upper door trim/inner door panel and window regulator assembly is removed, place it on a padded work surface and continue with Step 7 below.

If removing **PASSENGER SIDE OUTER DOOR HANDLE ASSEMBLY** follow Steps 4, 5 and 6 below to gain access to inside of door.

4. Remove passenger side cab door lower trim panel from cab door. Refer to **CAB DOOR LOWER TRIM PANEL** (See CAB DOOR LOWER TRIM PANEL, page 35)**, Remove Passenger Side Cab Door Lower Trim Panel**.

5. Remove passenger side upper door trim/inner door panel and window regulator assembly from cab door. Refer to **UPPER DOOR TRIM/INNER DOOR PANEL AND WINDOW REGULATOR ASSEMBLY** (See UPPER DOOR TRIM/INNER DOOR PANEL AND WINDOW REGULATOR ASSEMBLY, page 38)**, Remove Passenger Side Upper Door Trim/Inner Door Panel and Window Regulator Assembly**.

6. Once passenger side upper door trim/inner door panel and window regulator assembly is removed, place it on a padded work surface and continue with Step 7 below.

CAUTION – To prevent damage to the door while fully open, reinstall the door check strap.

Refer to Figure 78 (See Figure 78, page 89) for Items in parentheses.

7. Slide retaining clip (Item 1) from lock control rod (Item 2) and remove it from door lock cylinder assembly (Item 3), driver side shown.

Refer to Figure 79 (See Figure 79, page 90) for Items in parentheses.

8. Slide retaining clip (Item 2) from outer door handle control rod (Item 3) and remove it from outer door handle assembly (Item 1), driver side shown.

Refer to Figure 78 (See Figure 78, page 89) for Items in parentheses.

9. Remove four hex nuts and washers (Item 6) on inside of door and remove outer door handle assembly (Item 7) from cab door (Item 5), driver side shown.

4.28. REMOVE CAB DOOR OPENING SEALS

1. Pull old weather seal from cab door opening flange and from holes retaining locating pins below floor mat door scuff plate (Item 1, Figure 26) (See Figure 26, page 28).

4.29. ELECTRIC WINDSHIELD WIPER SWITCHES

The electric wiper/washer switches for the 5000*i* series and 9000*i* series are located on the wing panel (Item 3, Figure 80) of the instrument panel to the right of the driver.

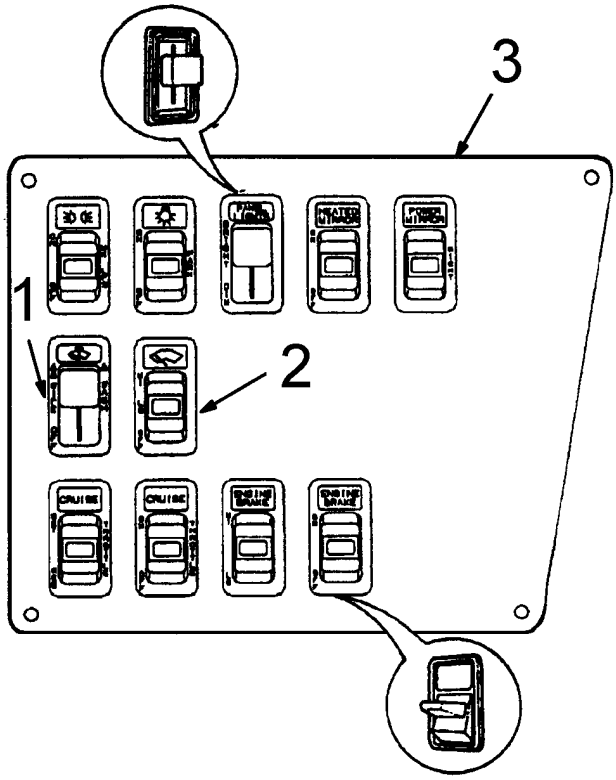

Figure 80 Electric Wiper/Washer Switches for 5000*i* and 9000*i* Series

1. INTERMITTENT/WASHER SWITCH
2. WIPER HI/LO SWITCH
3. WING PANEL

Remove Wiper/Washer Control Switches and Indicator Lights

To remove the electrical switches (Items 1 and 2, Figure 80) (See Figure 80, page 92) on the wing panel (Item 3, Figure 80) (See Figure 80, page 92), refer to **GROUP 08 – ELECTRICAL** in the **Master Service Manual**.

4.30. REMOVE WINDSHIELD WIPER ARM AND BLADE ASSEMBLY

Refer to Figure 81 for Items in parentheses.

1. Unlatch fiberglass tilt hood on both sides and raise hood to full open position. On 5000*i* series with a Butterfly Hood, unlatch both latches on right and/or left side hood and raise hood as required.

2. Remove windshield washer hoses (Items 1 and 2) from driver and/or passenger side windshield wiper arm and blade assemblies (Item 3).

3. Remove driver side and/or passenger side windshield wiper arm and blade assemblies (Item 3) by pulling windshield wiper arm slide lever (Item 4) out at the spline and pull windshield wiper arm and blade assembly off the spline.

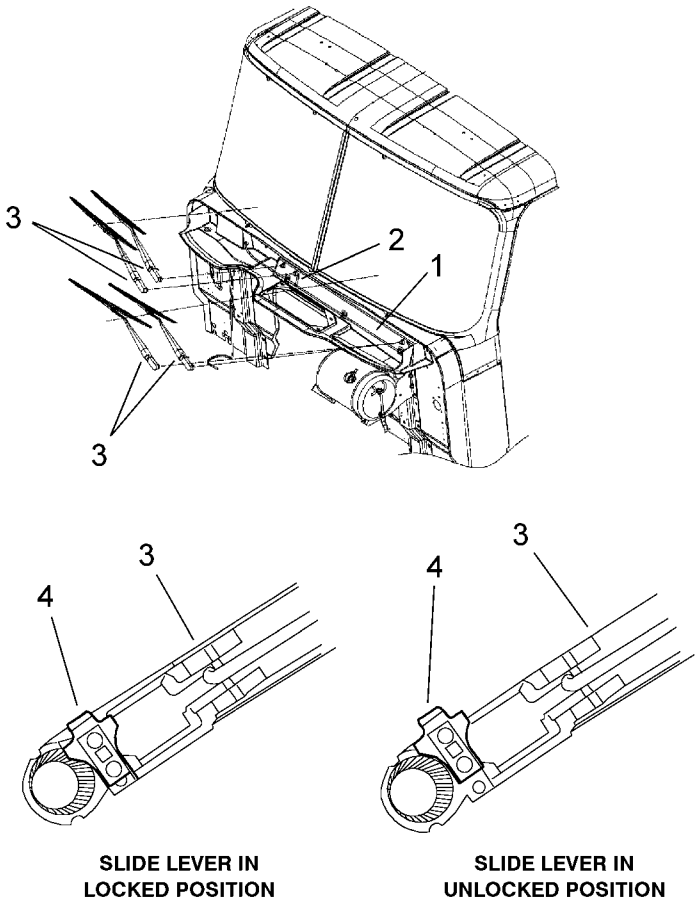

Figure 81 Windshield Wiper Arm/Blade

1. WINDSHIELD WASHER HOSE (DRIVER WIPER ARM)
2. WINDSHIELD WASHER HOSE (PASSENGER WIPER ARM)
3. WINDSHIELD WIPER ARM AND BLADE ASSEMBLY (DRIVER AND PASSENGER)
4. WINDSHIELD WIPER ARM SLIDE LEVER

4.31. REMOVE COWL TRAY

1. Remove windshield wiper arm and blade assemblies. Refer to **WINDSHIELD WIPER ARM AND BLADE ASSEMBLY** (See Remove WINDSHIELD WIPER ARM AND BLADE ASSEMBLY, page 92)**, Remove Windshield Wiper Arm and Blade Assembly**.

Refer to Figure 82 (See Figure 82, page 95) for Items in parentheses.

2. On standard 5000*i* series and 9000*i* series, remove cowl tray (Item 4) as follows:
   a. Remove windshield washer hoses (Items 1 and 2) from three retaining clips (Item 3) on cowl tray (Item 4).
   b. Remove windshield washer hose (Item 2) coming from windshield washer bottle from tee fitting (Item 5) of windshield washer hose assembly. Leave windshield washer hoses (Items 1 and 2) lay in the cowl tray (Item 4).
   c. Remove four hex flanged bolts (Item 6) securing cowl tray (Item 4) to engine side of dash panel.
   d. Remove four hex flanged bolts (Item 7) securing air intake screen (Item 8) and cowl tray (Item 4) to air duct inlet (Item 9). The air intake screen may be stuck on the cowl tray; if so, leave it.
   e. To remove cowl tray from vehicle refer to **Step 5** below.
3. On 5000*i* series and 9000*i* series with external air cleaners, remove cowl tray (Item 10) as follows:
   a. Remove windshield washer hoses (Items 1 and 2) from three retaining clips (Item 3) on cowl tray (Item 10).
   b. Remove windshield washer hose (Item 2) coming from windshield washer bottle from tee fitting (Item 5) of windshield washer hose assembly. Leave windshield washer hoses (Items 1 and 2) lay in the cowl tray (Item 10).
   c. Remove four hex flanged bolts (Item 6) securing cowl tray (Item 4) to engine side of dash panel.
   d. To remove cowl tray from vehicle refer to **Step 5** below.
4. On 5000*i* series with a butterfly hood, remove cowl tray (Item 11) as follows:
   a. Remove butterfly hood before removing the cowl tray. Refer to **GROUP 09 – HOOD, GRILLE, AND FENDERS** in the **Master Service Manual**.
   b. Remove windshield washer hoses (Items 1 and 2) from three retaining clips (Item 3) on cowl tray (Item 11).
   c. Remove windshield washer hose (Item 2) coming from windshield washer bottle from tee fitting (Item 5) of windshield washer hose assembly. Leave windshield washer hoses (Items 1 and 2) lay in the cowl tray (Item 11).
   d. Remove four hex flanged bolts (Item 6) securing cowl tray (Item 11) to engine side of dash panel.
   e. Remove four hex flanged bolts (Item 7) securing air intake screen (Item 8) and cowl tray (Item 11) to air duct inlet (Item 9). The air intake screen may be stuck on the cowl tray; if so, leave it.
   f. Remove three hex lock nuts and flat washers (Item 12) securing rear hood hinge retainer bracket (Item 13) to cowl tray (Item 11). Remove rear hood hinge retainer bracket from the three threaded studs (Item 14) and lay it out of the way.
   g. To remove cowl tray from vehicle refer to **Step 5** below.

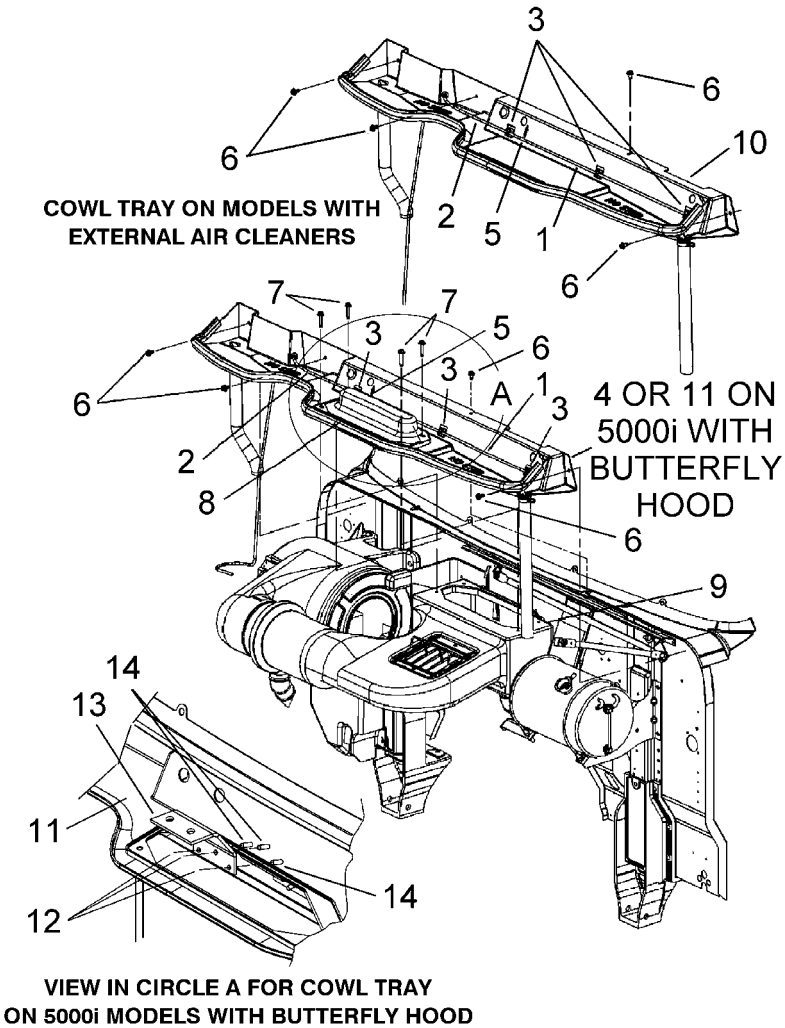

Figure 82 Cowl Tray

1. WINDSHIELD WASHER HOSE (DRIVER WIPER ARM)
2. WINDSHIELD WASHER HOSE (FROM WASHER BOTTLE)
3. RETAINER CLIPS
4. COWL TRAY
5. TEE FITTING
6. HEX FLANGED BOLT, 5/16–18 X 3/4
7. HEX FLANGED BOLT, 5/16–18 X 1–7/8
8. AIR INTAKE SCREEN
9. AIR DUCT INLET
10. COWL TRAY (MODELS WITH EXTERNAL AIR CLEANERS)
11. COWL TRAY (MODELS WITH BUTTERFLY HOOD)
12. HEX LOCK NUT, 5/16–18 UNC AND FLAT WASHER, 5/16
13. REAR HOOD HINGE RETAINER BRACKET
14. THREADED STUDS

Refer to Figure 83 for Items in parentheses.

5. With all mounting hardware removed, pull cowl tray (Item 1) away from engine side of dash panel on passenger side. Push grommet (Item 2) through hole in cowl tray and pull windshield washer hose (Item 3) with grommet from windshield washer bottle out of hole in cowl tray. Lay washer hose and grommet out of the way.

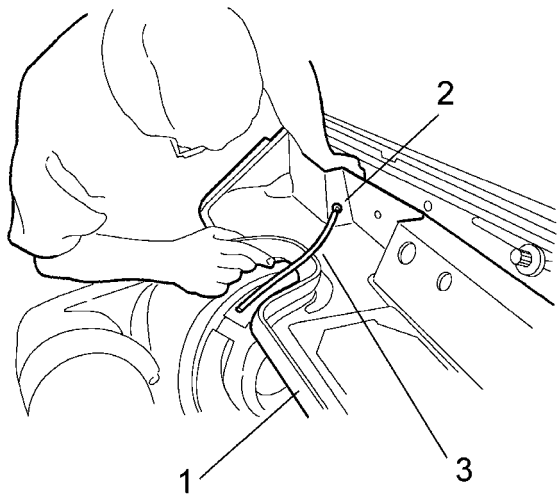

Figure 83 Washer Hose and Cowl Tray

1. COWL TRAY
2. GROMMET
3. WINDSHIELD WASHER HOSE

Refer to Figure 84 for Items in parentheses.

6. Before removing cowl tray (Item 1) from cowl, note if the cowl tray drain tube (Item 2) is positioned behind air cleaner (Item 3). If it is, note how it is routed, this will help when reinstalling cowl tray if cowl tray drain tube is pulled out with cowl tray. You may remove cowl tray drain tube from cowl tray by squeezing drain tube clamp (Item 4). Separate cowl tray drain tube from cowl tray, leaving cowl tray drain tube in place. Remove cowl tray and lay it out of the way.

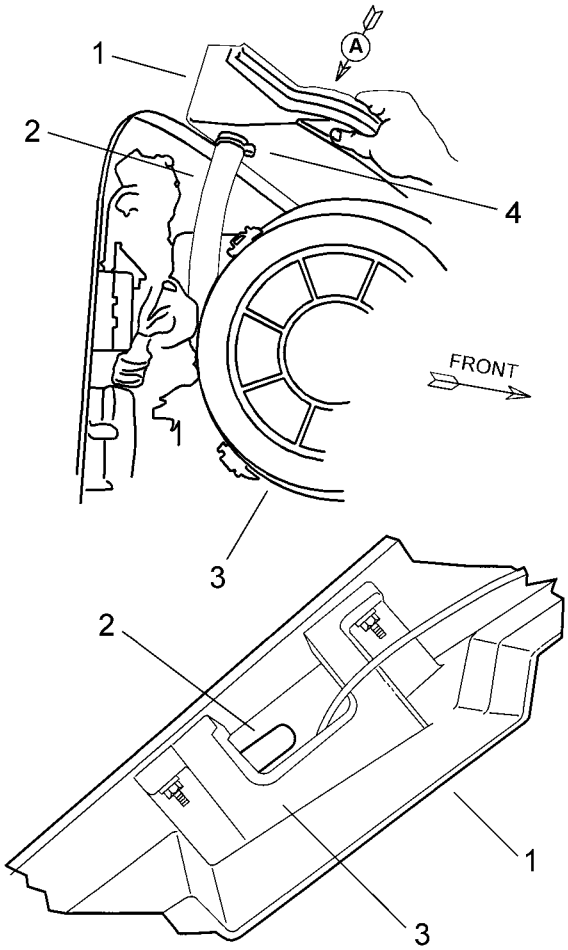

VIEW IN DIRECTION OF ARROW A

Figure 84 Cowl Tray Drain Tube and Cowl Tray

1. COWL TRAY
2. COWL TRAY DRAIN TUBE
3. AIR CLEANER
4. DRAIN TUBE CLAMP

4.32. REMOVE AIR DUCT INLET

NOTE – If the vehicle being serviced has external air cleaners the following procedure will not be required.

1. Remove windshield wiper arm and blade assemblies. Refer to **WINDSHIELD WIPER ARM AND BLADE ASSEMBLY** (See Remove WINDSHIELD WIPER ARM AND BLADE ASSEMBLY, page 92)**, Remove Windshield Wiper Arm and Blade Assembly**.

2. Remove cowl tray. Refer to **COWL TRAY** (See Remove COWL TRAY, page 94)**, Remove Cowl Tray**.

Refer to Figure 85 for Items in parentheses.

3. Reach under air duct inlet (Item 1) and remove two hex lock nuts and washers (Item 2) from air duct inlet mounting studs (Item 3) securing air duct inlet to air duct inlet mounting bracket (Item 4).

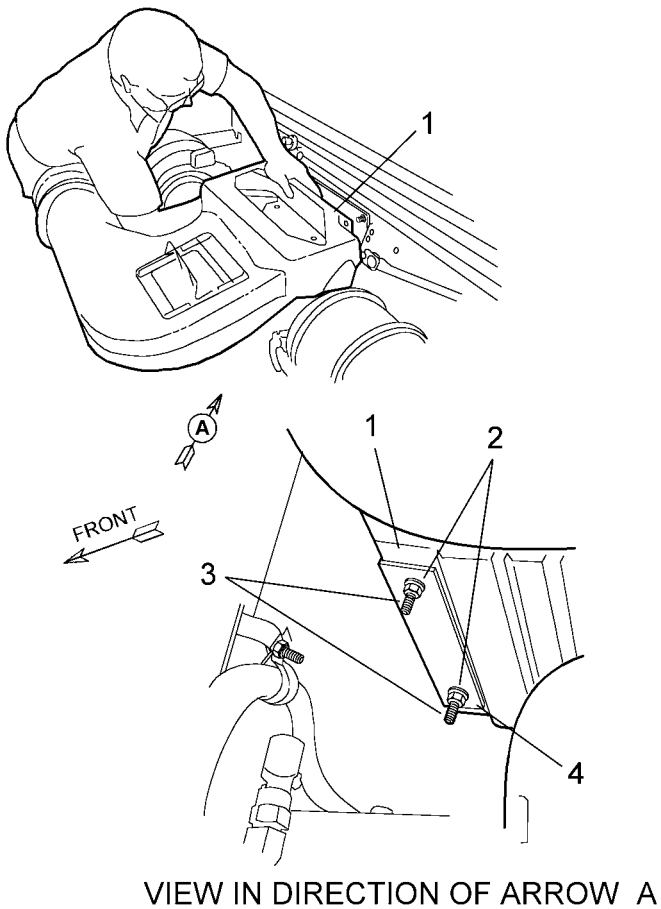

Figure 85 Air Duct Inlet

1. AIR DUCT INLET
2. HEX LOCK NUTS, 5/16–18 UNC AND WASHERS, 5/16
3. AIR DUCT INLET MOUNTING STUDS, 5/16–18 UNC
4. AIR DUCT INLET MOUNTING BRACKET

4. Grab air duct inlet (Item 1, Figure 86) and rotate it up toward the radiator and out of the way. This will allow access to remove windshield wiper motor, bracket and linkage assembly (Item 2, Figure 87) (See Figure 87, page 101) or (Item 2, Figure 88) (See Figure 88, page 103) or (Item 2, Figure 89) (See Figure 89, page 105).

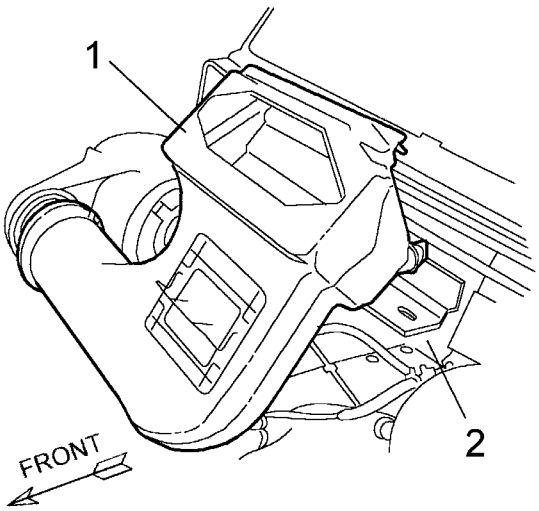

Figure 86 Air Duct Inlet Rotated

1. AIR DUCT INLET
2. AIR DUCT INLET MOUNTING BRACKET

4.33. WINDSHIELD WIPER MOTOR, BRACKET AND LINKAGE ASSEMBLY

Remove Windshield Wiper Motor, Bracket and Linkage Assembly on Vehicles before 2002 Engines before May 2001

1. Remove windshield wiper arm and blade assemblies. Refer to **WINDSHIELD WIPER ARM AND BLADE ASSEMBLY** (See Remove WINDSHIELD WIPER ARM AND BLADE ASSEMBLY, page 92)**, Remove Windshield Wiper Arm and Blade Assembly**.

2. Remove cowl tray. Refer to **COWL TRAY** (See Remove COWL TRAY, page 94)**, Remove Cowl Tray**.

3. Remove air duct inlet. Refer to **AIR DUCT INLET** (See Remove AIR DUCT INLET, page 98)**, Remove Air Duct Inlet**.

Refer to Figure 87 for Items in parentheses.

NOTE – Figure 87 shows the Windshield Wiper Motor, Bracket and Linkage Assembly used on vehicles with one piece windshields and the Windshield Wiper Motor, Bracket and Linkage Assembly used on vehicles with two piece windshields.

4. Remove hex lock nuts and flat washers (Item 1) at both ends of windshield wiper motor, bracket and linkage assembly (Item 2).

5. Reach under surge tank (Item 3) and disconnect windshield wiper motor electrical connector (Item 4) from the wiring harness electrical connector (Item 5).

6. Remove two hex head mach. screw sems assemblies (Item 6) holding windshield wiper motor, bracket and linkage assembly (Item 2) to surge tank mounting bracket (Item 7) and remove windshield wiper motor, bracket and linkage assembly from the vehicle. Place it on clean, dry work surface.

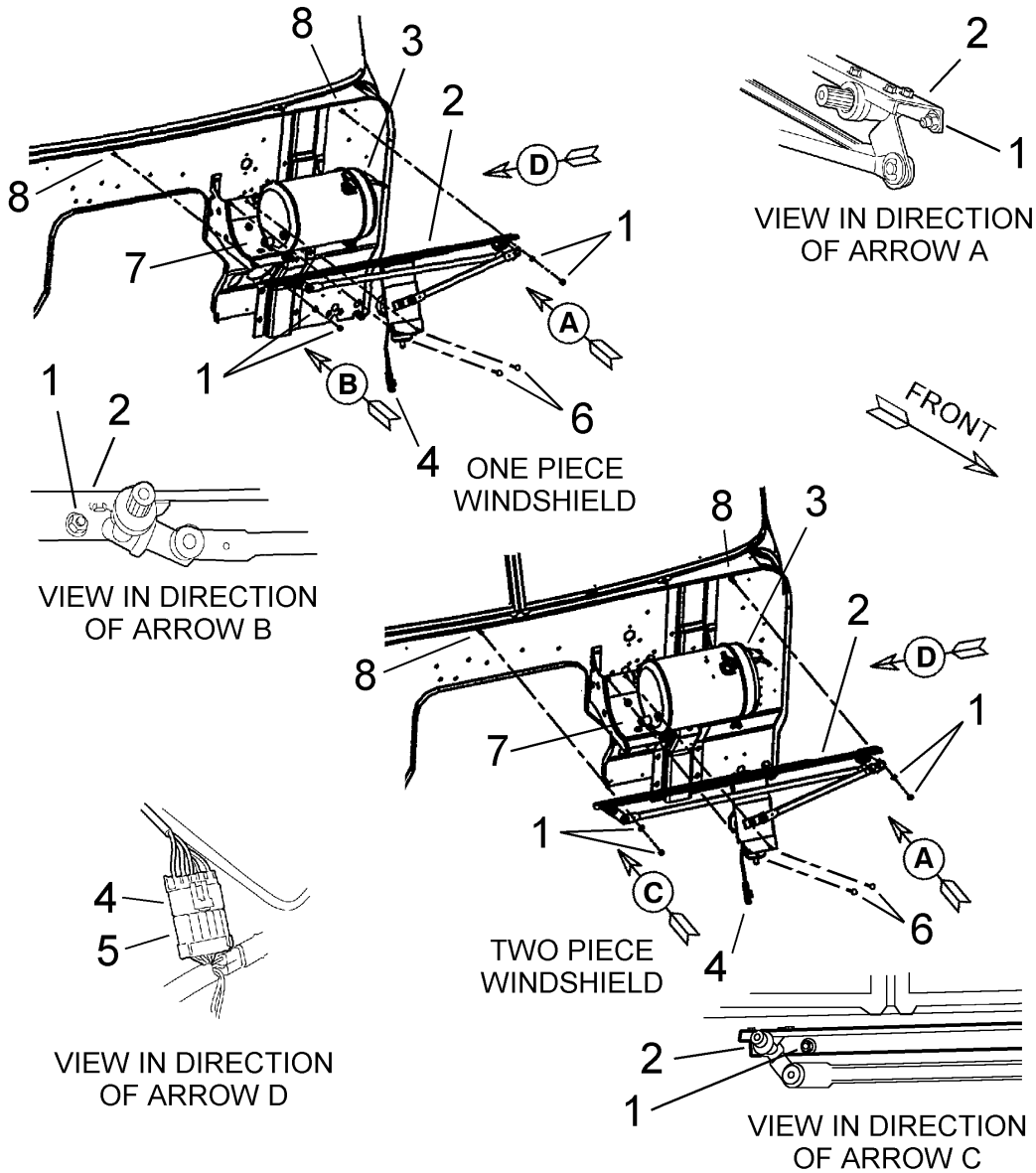

Figure 87 Windshield Wiper Motor, Bracket and Linkage Assembly on Vehicles before 2002 Engines before May 2001

1. HEX NUTS (5/16–18 UNC GRADE 8) AND WASHERS (5/16)
2. WINDSHIELD WIPER MOTOR, BRACKET AND LINKAGE ASSEMBLY
3. SURGE TANK
4. WINDSHIELD WIPER MOTOR ELECTRICAL CONNECTOR
5. WIRING HARNESS ELECTRICAL CONNECTOR
6. HEX HEAD MACH. SCREW SEMS ASSEMBLY (1/4–20 UNC)
7. SURGE TANK MOUNTING BRACKET
8. THREADED MOUNTING STUD

Remove Windshield Wiper Motor, Bracket and Linkage Assembly on Vehicles with 2002 Engines after May 2001

1. Remove windshield wiper arm and blade assemblies. Refer to **WINDSHIELD WIPER ARM AND BLADE ASSEMBLY** (See Remove WINDSHIELD WIPER ARM AND BLADE ASSEMBLY, page 92)**, Remove Windshield Wiper Arm and Blade Assembly**.

2. Remove cowl tray. Refer to **COWL TRAY** (See Remove COWL TRAY, page 94)**, Remove Cowl Tray**.

3. Remove air duct inlet. Refer to **AIR DUCT INLET** (See Remove AIR DUCT INLET, page 98)**, Remove Air Duct Inlet**.

Refer to Figure 88 for Items in parentheses.

NOTE – Figure 88 shows the Windshield Wiper Motor, Bracket and Linkage Assembly used on vehicles with one piece windshields and the Windshield Wiper Motor, Bracket and Linkage Assembly used on vehicles with two piece windshields.

4. Remove hex lock nuts and flat washers (Item 1) at both ends of windshield wiper motor, bracket and linkage assembly (Item 2).

5. Reach under windshield wiper mounting bracket (Item 3) and disconnect windshield wiper motor electrical connector (Item 4) from the wiring harness electrical connector (Item 5).

6. Remove two hex head mach. screw sems assemblies (Item 6) holding windshield wiper motor, bracket and linkage assembly (Item 2) to windshield wiper mounting bracket (Item 3) and remove windshield wiper motor, bracket and linkage assembly from the vehicle. Place it on clean, dry work surface.

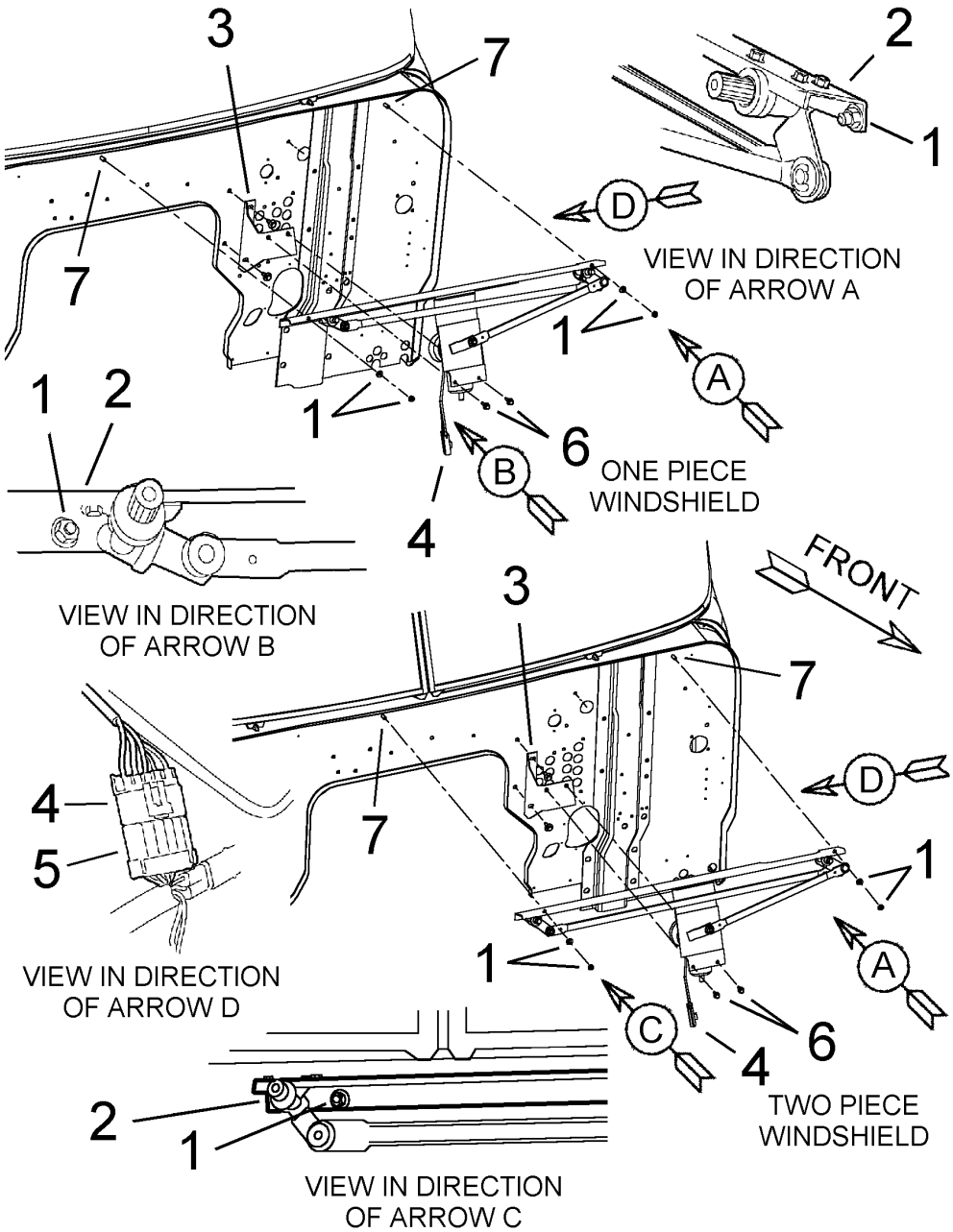

Figure 88 Windshield Wiper Motor, Bracket and Linkage Assembly on Vehicles with 2002 Engines after May 2001

1. HEX LOCK NUT (5/16–18 UNC GRADE 8) AND FLAT WASHER (5/16)
2. WINDSHIELD WIPER MOTOR, BRACKET AND LINKAGE ASSEMBLY
3. WINDSHIELD WIPER MOUNTING BRACKET
4. WINDSHIELD WIPER MOTOR ELECTRICAL CONNECTOR
5. WIRING HARNESS ELECTRICAL CONNECTOR
6. HEX HEAD MACH. SCREW SEMS ASSEMBLY (1/4–20 UNC)
7. THREADED MOUNTING STUD

Remove Windshield Wiper Motor, Bracket and Linkage Assembly on Vehicles with 2002 Engines after January 2005

1. Remove windshield wiper arm and blade assemblies. Refer to **WINDSHIELD WIPER ARM AND BLADE ASSEMBLY** (See Remove WINDSHIELD WIPER ARM AND BLADE ASSEMBLY, page 92)**, Remove Windshield Wiper Arm and Blade Assembly**.

2. Remove cowl tray. Refer to **COWL TRAY** (See Remove COWL TRAY, page 94)**, Remove Cowl Tray**.

3. Remove air duct inlet. Refer to **AIR DUCT INLET** (See Remove AIR DUCT INLET, page 98)**, Remove Air Duct Inlet**.

Refer to Figure 89 for Items in parentheses.

NOTE – Figure 89 shows the Windshield Wiper Motor, Bracket and Linkage Assembly used on vehicles with one piece windshields and the Windshield Wiper Motor, Bracket and Linkage Assembly used on vehicles with two piece windshields.

4. Remove hex lock nuts and flat washers (Item 1) at both ends of windshield wiper motor, bracket and linkage assembly (Item 2).

5. Disconnect wiring harness electrical connector (Item 4) from windshield wiper motor electrical connector (Item 5).

6. Remove hex head mach. screw sems assembly (Item 3) holding windshield wiper motor, bracket and linkage assembly (Item 2) to engine side of cowl and remove windshield wiper motor, bracket and linkage assembly from the vehicle. Place it on clean, dry work surface.

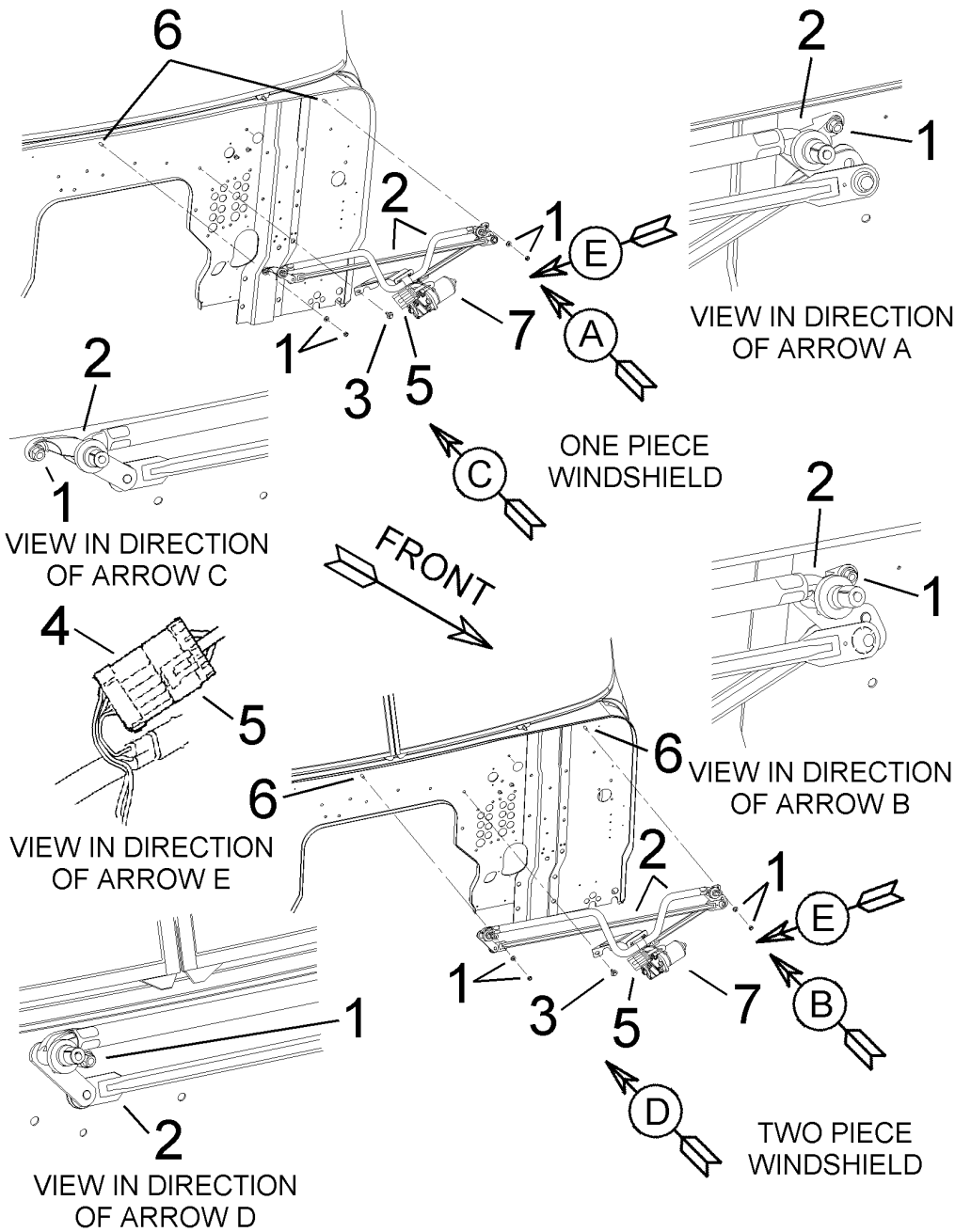

Figure 89 Windshield Wiper Motor, Bracket and Linkage Assembly on Vehicles with 2002 Engines after January 2005

1. HEX LOCK NUT (5/16–18 UNC GRADE 8) AND FLAT WASHER (5/16)
2. WINDSHIELD WIPER MOTOR, BRACKET AND LINKAGE ASSEMBLY
3. HEX HEAD MACH. SCREW SEMS ASSEMBLY (5/16–18 UNC X 1)
4. WIRING HARNESS ELECTRICAL CONNECTOR
5. WINDSHIELD WIPER MOTOR ELECTRICAL CONNECTOR
6. THREADED MOUNTING STUD
7. WINDSHIELD WIPER MOTOR

4.34. WIPER MOTOR

NOTE – The electric wiper motor is not serviceable and is replaced as a unit.

The wiper motor is part of the windshield wiper motor, bracket and linkage assembly (Item 2, Figure 87) (See Figure 87, page 101) or (Item 2, Figure 88) (See Figure 88, page 103) or (Item 2, Figure 89) (See Figure 89, page 105) mounted on the engine side of the cowl under the cowl tray and engine air intake box assembly.

Remove Wiper Motor on Vehicles before 2002 Engines and after 2002 Engines before January 2005

1. Remove windshield wiper arm and blade assemblies. Refer to **WINDSHIELD WIPER ARM AND BLADE ASSEMBLY** (See Remove WINDSHIELD WIPER ARM AND BLADE ASSEMBLY, page 92)**, Remove Windshield Wiper Arm and Blade Assembly**.

2. Remove cowl tray. Refer to **COWL TRAY** (See Remove COWL TRAY, page 94)**, Remove Cowl Tray**.

3. Remove air duct inlet. Refer to **AIR DUCT INLET** (See Remove AIR DUCT INLET, page 98)**, Remove Air Duct Inlet**.

4. Remove windshield wiper motor, bracket and linkage assembly from engine side of cowl. Refer to **WINDSHIELD WIPER MOTOR, BRACKET AND LINKAGE ASSEMBLY** (See WINDSHIELD WIPER MOTOR, BRACKET AND LINKAGE ASSEMBLY, page 99)**, Remove Windshield Wiper Motor, Bracket and Linkage Assembly**.

Refer to Figure 90 for Items in parentheses.

5. With windshield wiper motor, bracket and linkage assembly (Item 1) on a clean, dry work surface, remove E-Clip retainer (Item 2) securing wiper linkage (Item 3) to wiper motor pivot arm (Item 4), then remove flat washer (Item 5), wiper linkage (Item 3) and flat washer (Item 5) from wiper motor pivot arm.

6. Remove hex lock nut (Item 6) securing wiper motor pivot arm (Item 4) to motor shaft and remove wiper motor pivot arm from motor shaft.

7. Remove three hex bolts (Item 7) securing windshield wiper motor (Item 8) to windshield wiper motor, bracket and linkage assembly (Item 1) and remove windshield wiper motor.

NOTE – The third hex bolt (Item 7) is not visible in Figure 90 below, it is accessible after the wiper motor pivot arm (Item 4) was removed.

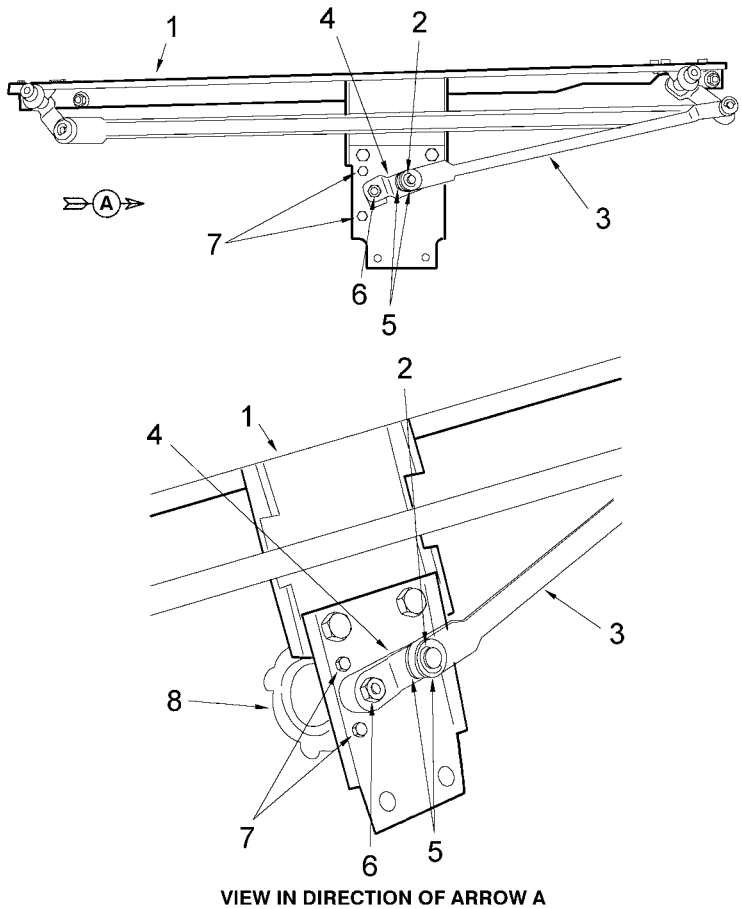

Figure 90 Windshield Wiper Motor on Vehicles before 2002 Engines and after 2002 Engines before January 2005

1. WINDSHIELD WIPER MOTOR, BRACKET AND LINKAGE ASSEMBLY
2. E-CLIP RETAINER
3. WIPER LINKAGE
4. WIPER MOTOR PIVOT ARM
5. FLAT WASHER
6. HEX LOCK NUT
7. HEX BOLT
8. WINDSHIELD WIPER MOTOR

Remove Wiper Motor with Electrical Connector part of Pig-Tail Wiring Harness on Vehicles with 2002 Engines after January 2005

1. Remove windshield wiper arm and blade assemblies. Refer to **WINDSHIELD WIPER ARM AND BLADE ASSEMBLY** (See Remove WINDSHIELD WIPER ARM AND BLADE ASSEMBLY, page 92)**, Remove Windshield Wiper Arm and Blade Assembly**.

2. Remove cowl tray. Refer to **COWL TRAY** (See Remove COWL TRAY, page 94)**, Remove Cowl Tray**.

3. Remove air duct inlet. Refer to **AIR DUCT INLET** (See Remove AIR DUCT INLET, page 98)**, Remove Air Duct Inlet**.

4. Remove windshield wiper motor, bracket and linkage assembly from engine side of cowl. Refer to **WINDSHIELD WIPER MOTOR, BRACKET AND LINKAGE ASSEMBLY** (See WINDSHIELD WIPER MOTOR, BRACKET AND LINKAGE ASSEMBLY, page 99)**, Remove Windshield Wiper Motor, Bracket and Linkage Assembly**.

Refer to Figure 91 for Items in parentheses.

5. With windshield wiper motor, bracket and linkage assembly (Item 1) on a clean, dry work surface, remove hex flanged lock nut (Item 2) securing wiper motor pivot arm (Item 3) and wiper linkage (Item 4) to motor shaft, then remove wiper motor pivot arm and wiper linkage (Items 3 and 4) from wiper motor shaft.

6. Remove three hex flanged head bolts (Item 5) securing windshield wiper motor (Item 7) to windshield wiper motor mounting bracket (Item 8) and remove windshield wiper motor.

7. If the windshield wiper motor mounting bracket (Item 8) is damaged, remove two hex flanged head bolts (Item 6) securing windshield wiper motor mounting bracket to windshield wiper motor, bracket and linkage assembly mounting bracket (Item 9) of windshield wiper motor, bracket and linkage assembly (Item 1) and remove windshield wiper motor mounting bracket (Item 8).

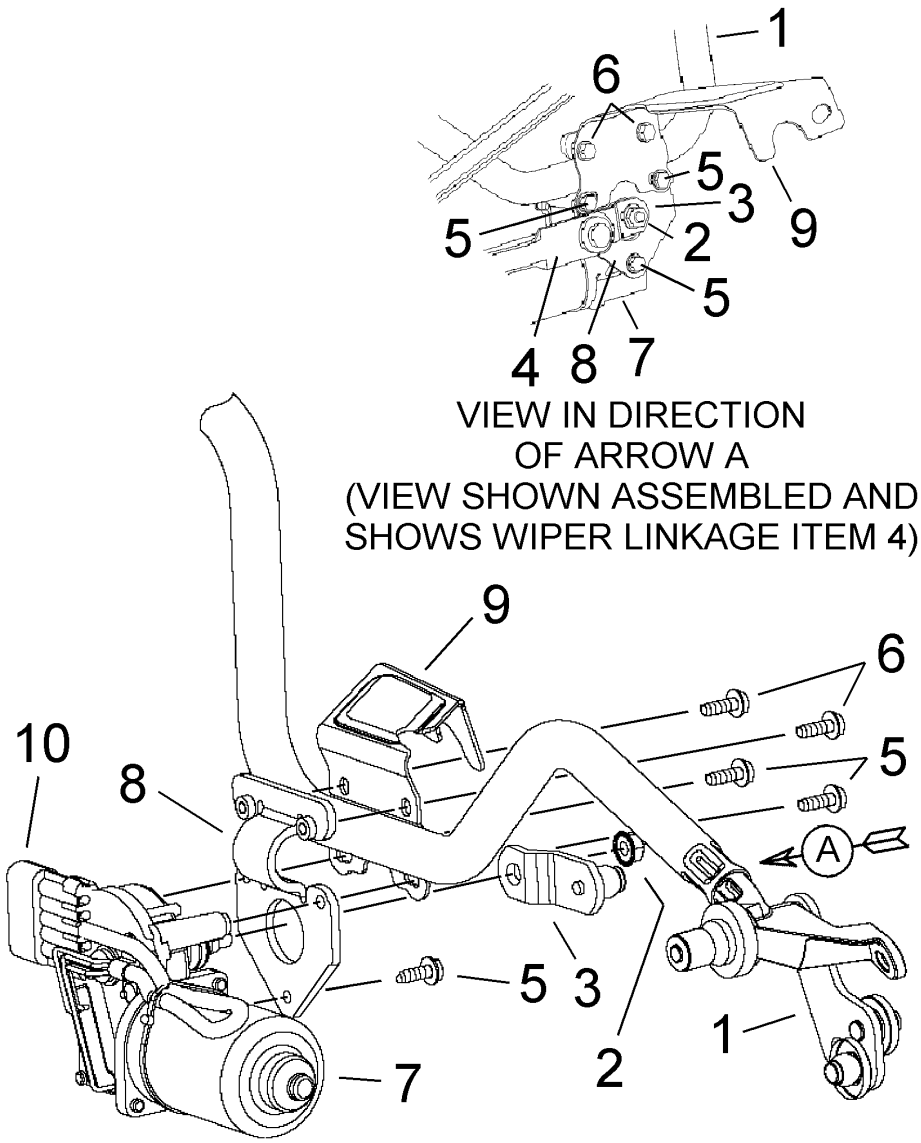

Figure 91 Windshield Wiper Motor with Electrical Connector part of Pig-Tail Wiring Harness on Vehicles with 2002 Engines after January 2005

1. WINDSHIELD WIPER MOTOR, BRACKET AND LINKAGE ASSEMBLY
2. HEX FLANGED LOCK NUT
3. WIPER MOTOR PIVOT ARM
4. WIPER LINKAGE
5. HEX FLANGED HEAD BOLT
6. HEX FLANGED HEAD BOLT
7. WINDSHIELD WIPER MOTOR
8. WINDSHIELD WIPER MOTOR MOUNTING BRACKET
9. WINDSHIELD WIPER MOTOR, BRACKET AND LINKAGE ASSEMBLY MOUNTING BRACKET
10. WINDSHIELD WIPER MOTOR ELECTRICAL CONNECTOR

Remove Wiper Motor with Electrical Connector as part of Wiper Motor on Vehicles with 2002 Engines after January 2005

1. Remove windshield wiper arm and blade assemblies. Refer to **WINDSHIELD WIPER ARM AND BLADE ASSEMBLY** (See Remove WINDSHIELD WIPER ARM AND BLADE ASSEMBLY, page 92)**, Remove Windshield Wiper Arm and Blade Assembly**.

2. Remove cowl tray. Refer to **COWL TRAY** (See Remove COWL TRAY, page 94)**, Remove Cowl Tray**.

3. Remove air duct inlet. Refer to **AIR DUCT INLET** (See Remove AIR DUCT INLET, page 98)**, Remove Air Duct Inlet**.

4. Remove windshield wiper motor, bracket and linkage assembly from engine side of cowl. Refer to **WINDSHIELD WIPER MOTOR, BRACKET AND LINKAGE ASSEMBLY** (See WINDSHIELD WIPER MOTOR, BRACKET AND LINKAGE ASSEMBLY, page 99)**, Remove Windshield Wiper Motor, Bracket and Linkage Assembly**.

Refer to Figure 92 for Items in parentheses.

5. With windshield wiper motor, bracket and linkage assembly (Item 1) on a clean, dry work surface, using one or two screwdrivers, carefully pry the wiper linkage (Item 3) off the wiper motor pivot arm (Item 2).

NOTE – The wiper motor pivot arm (Item 2) is part of the windshield wiper motor (Item 5) and is replaced with the windshield wiper motor.

6. Remove four hex flanged head bolts (Item 4) securing windshield wiper motor (Item 5) to windshield wiper motor, bracket and linkage assembly mounting bracket (Item 6) and remove windshield wiper motor.

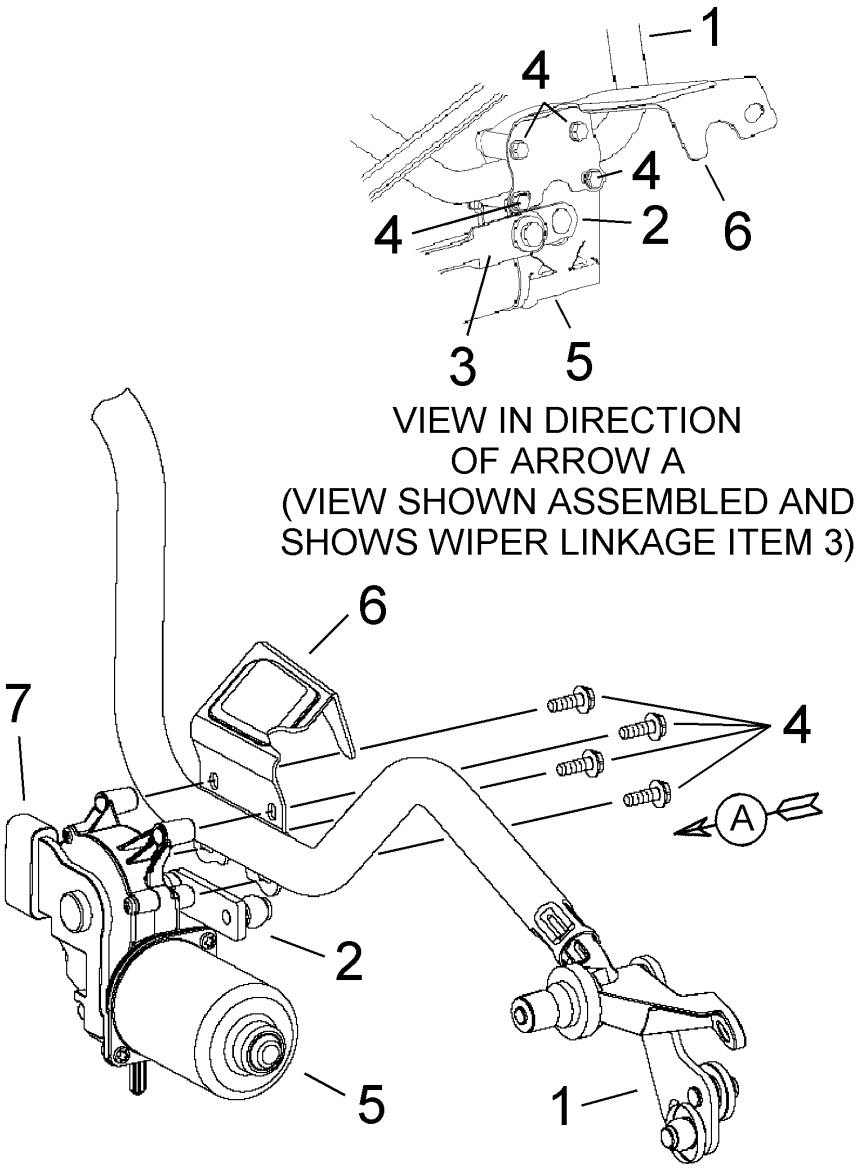

Figure 92 Windshield Wiper Motor with Electrical Connector as part of Wiper Motor on Vehicles with 2002 Engines after January 2005

1. WINDSHIELD WIPER MOTOR, BRACKET AND LINKAGE ASSEMBLY
2. WIPER MOTOR PIVOT ARM
3. WIPER LINKAGE
4. HEX FLANGED HEAD BOLT
5. WINDSHIELD WIPER MOTOR
6. WINDSHIELD WIPER MOTOR, BRACKET AND LINKAGE ASSEMBLY MOUNTING BRACKET
7. WINDSHIELD WIPER MOTOR ELECTRICAL CONNECTOR

4.35. REMOVE WASHER RESERVOIR/PUMP MOTOR ASSEMBLY

1. Disconnect battery ground strap.

Refer to Figure 93 for Items in parentheses.

2. Disconnect washer hose (Item 1) and electrical connector (Item 2) from washer pump motor (Item 3).

NOTE – There will be washer fluid in washer hose. Hold washer hose so that fluid does not spill and drain washer hose into a cup.

3. Remove three hex flanged mounting bolts (Item 4) and one hex flanged mounting bolt (Item 5), and remove washer reservoir assembly (Item 6) from vehicle.

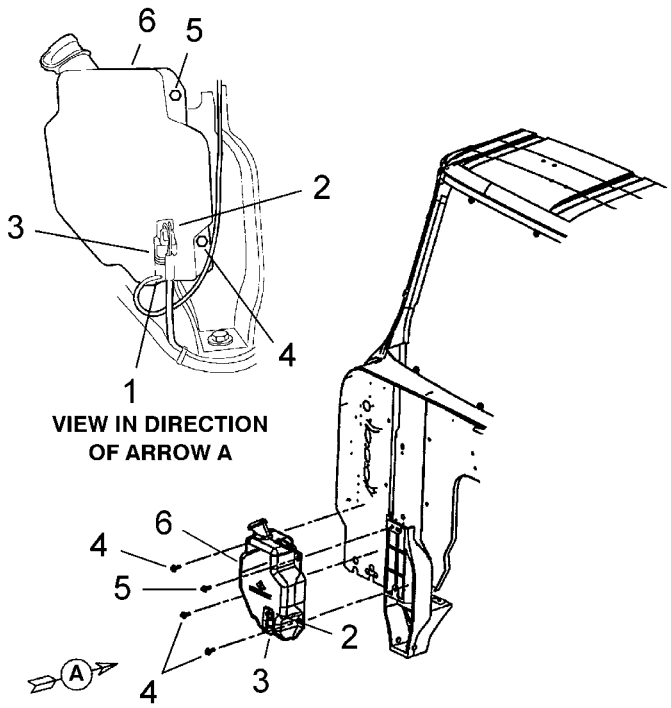

Figure 93 Washer Reservoir and Pump Assembly

1. WASHER HOSE
2. ELECTRICAL CONNECTOR
3. WASHER PUMP MOTOR
4. HEX FLANGED MOUNTING BOLTS, 5/16–18 UNC-2A X 1–1/4
5. HEX FLANGED MOUNTING BOLT, 5/16–18 UNC-2A X 3/4
6. WASHER RESERVOIR ASSEMBLY

4.36. REMOVE WASHER RESERVOIR PUMP MOTOR — ELECTRIC

If washer pump motor needs to be removed from washer reservoir you do not have to remove washer reservoir assembly from vehicle.

Refer to Figure 93 (See Figure 93, page 112) for Items in parentheses.

1. Disconnect the battery ground strap.

2. Disconnect washer hose (Item 1) and electrical connector (Item 2) from washer pump motor (Item 3).

3. To remove washer pump motor (Item 3) from washer reservoir assembly (Item 6), pull washer pump motor forward then up gently out of washer reservoir assembly.

4.37. CAB

General Guidelines For Removal

The following steps provide a guideline sequence for cab removal. The details of the removal procedure vary for different vehicle models, and for special equipment and accessories.

1. Block vehicle wheels and release parking brake.

2. Drain air from air system.

3. On SBA 5000*i* series (with fiberglass tilt hood), SFA 5000*i* series and 9000*i* series, tilt hood forward and remove air cleaner ducts, if required.

4. On SBA 5000*i* series (with butterfly hood, optional after August 1994), remove hood, stay rods and air cleaner ducts. Refer to **GROUP 09 – HOOD, GRILLE, AND FENDERS** in the **Master Service Manual**.

5. Discharge air conditioning system and disconnect system lines, if so equipped. Refer to **GROUP 16 – CAB** in the **Master Service Manual** for the proper procedures.

WARNING – To avoid personal injury or death, DO NOT remove components while pressure is in the air conditioning system. Refrigerant must be recovered from the air conditioning system before any components of the system are removed or replaced.

WARNING – To help protect the environment, always use approved refrigerant recycling equipment when working with R-134a. Federal and state laws require that refrigerant be recovered and recycled.

WARNING – Effective November 1995, recovery and recycling of R-134a will be required by law. Do not vent refrigerant into the atmosphere. Because of the absence of chlorine in the molecular structure of R-134a, the use of R-134a refrigerant will not have any harmful effects on the ozone layer of the atmosphere. Because there is not enough evidence to determine the "greenhouse" effect of R-134a, recycling of R-134a is recommended.

6. Disconnect battery ground cable and frame-to-cab ground cable.

7. Remove steering gear universal joint at steering gear.

8. Disconnect accelerator linkage and cruise-control, if so equipped.

9. Disconnect wiring harness connectors from cab dash and floor panels.

10. Disconnect heater hoses, clutch linkage, engine shut off control cable, brake air lines and hoses, and auxiliary oil filter hose.

WARNING – To avoid personal injury, whenever any component is serviced or removed from the air system, be sure the air system is drained and be sure to set the parking brake and/or block the vehicle wheels to prevent the vehicle from moving while the service is being performed.

11. Remove transmission gearshift lever. Refer to **GROUP – 13 TRANSMISSION** in the **Master Service Manual**.

12. Detach any other connections between cab and frame, if required.

Remove SBA and SFA Cab for 5000*i* Series with Rear Hard Mount before November 1999

Refer to Figure 94 (See Figure 94, page 115) for Items in parentheses.

1. To remove SBA and SFA cab for 5000*i* series with rear hard mount before November 1999, use the following procedure.
   a. Remove hex flanged head bolt and hex flanged lock nut (Items 1 and 2, View Circle A) securing front cab mounting bracket (Item 3, View Circle A), located on engine side of cab cowl, to chassis front cab mounting bracket (Item 4, View Circle A), both sides.
   b. From underneath the rear cab mounting crossmember (Item 16), remove hex lock nut (Item 10), flat washer (Item 6), cab mounting insulator (Item 8) and insulator retainer (Item 9) from each hex head bolt (Item 5).
   c. To access the head of the two hex head bolts (Item 5), lift the floor mat behind the seats, unless being replaced, each hex head bolt (Item 5), flat washer (Item 6), spring (Item 7), flat washer (Item 6), cab mounting insulator (Item 8) and insulator retainer (Item 9) used to secure upper rear cab mounting bracket (Item 11) to lower rear cab mounting bracket (Item 12) can remain in place when the cab is lifted from the chassis.

NOTE – Use an overhead crane and cab lifting fixture when removing cab from chassis. Pad lifting fixture to prevent damage to cab assembly.

2. Carefully lift cab off chassis. Once the front cab mounting bracket (Item 3, View Circle A) has cleared the chassis front cab mounting bracket (Item 4, View Circle A), remove two mounting bracket bushings and spacer (Items 13 and 14, View Circle A). Also remove two insulators (Item 15) from lower rear cab mounting bracket (Item 12). Save for reinstallation.

3. Place cab assembly on a padded surface to prevent damage to cab assembly and paint.

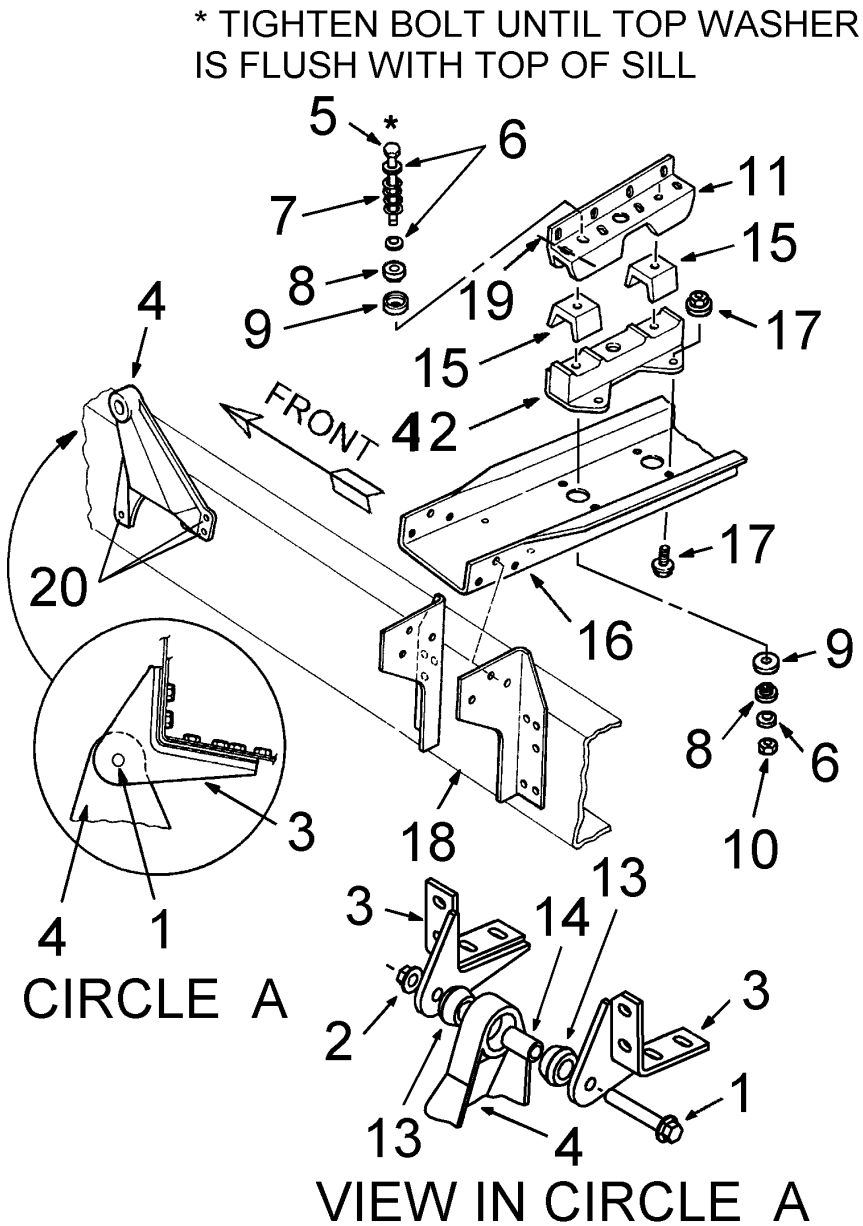

Figure 94 SBA and SFA Cab for 5000*i* Series with Rear Hard Mount before November 1999

1. HEX FLANGED HEAD BOLT
2. HEX FLANGED LOCK NUT
3. FRONT CAB MOUNTING BRACKET
4. CHASSIS FRONT CAB MOUNTING BRACKET
5. HEX HEAD BOLT
6. FLAT WASHER
7. SPRING
8. CAB MOUNTING INSULATOR
9. INSULATOR RETAINER
10. HEX LOCK NUT
11. UPPER REAR CAB MOUNTING BRACKET
12. LOWER REAR CAB MOUNTING BRACKET
13. MOUNTING BRACKET BUSHING
14. SPACER
15. INSULATOR
16. REAR CAB MOUNTING CROSSMEMBER
17. HEX FLANGED HEAD BOLT, FLANGED HEX LOCK NUT. TIGHTEN TO 100 TO 120 Lbf-ft (136 TO 163 N•m)
18. FRAME RAIL
19. HEX HEAD BOLT, LOCK WASHER, FLAT WASHER
20. HEX FLANGED HEAD BOLT AND HEX FLANGED LOCK NUT

Remove SBA and SFA Cab for 5000*i* Series with Rear Hard Mount after November 1999

Refer to Figure 95 (See Figure 95, page 117) for Items in parentheses.

1. To remove SBA and SFA cab for 5000*i* series with rear hard mount after November 1999, use the following procedure.
   a. Remove hex head bolt (Item 1), flat washer (Item 2), front cab mounting safety stop (Item 3) and hex lock nut (Item 4) securing front cab mounting bracket (Item 5), located on engine side of cab cowl, to front cab mounting insulator (Item 16) and chassis front cab mounting bracket (Item 6) mounted to frame rail (Item 22), both sides.
   b. From underneath the rear cab mounting crossmember (Item 19), remove hex lock nut (Item 12), flat washer (Item 8) and rear cab mounting insulator (Item 10) from each hex head bolt (Item 7).
   c. To access the head of the two hex head bolts (Item 7), lift the floor mat behind the seats, unless being replaced, each hex head bolt (Item 7), flat washer (Item 8), spring (Item 9), flat washer (Item 8), cab mounting insulator (Item 10) and insulator retainer (Item 11) used to secure upper rear cab mounting bracket (Item 13) to lower rear cab mounting bracket (Item 14) can remain in place when the cab is lifted from the chassis.

NOTE – Use an overhead crane and cab lifting fixture when removing cab from chassis. Pad lifting fixture to prevent damage to cab assembly.

2. Carefully lift cab off chassis. Once the upper rear cab mounting bracket (Item 13) has cleared the lower rear cab mounting bracket (Item 14), remove two insulators (Item 15). Save for reinstallation.

3. Place cab assembly on a padded surface to prevent damage to cab assembly and paint.

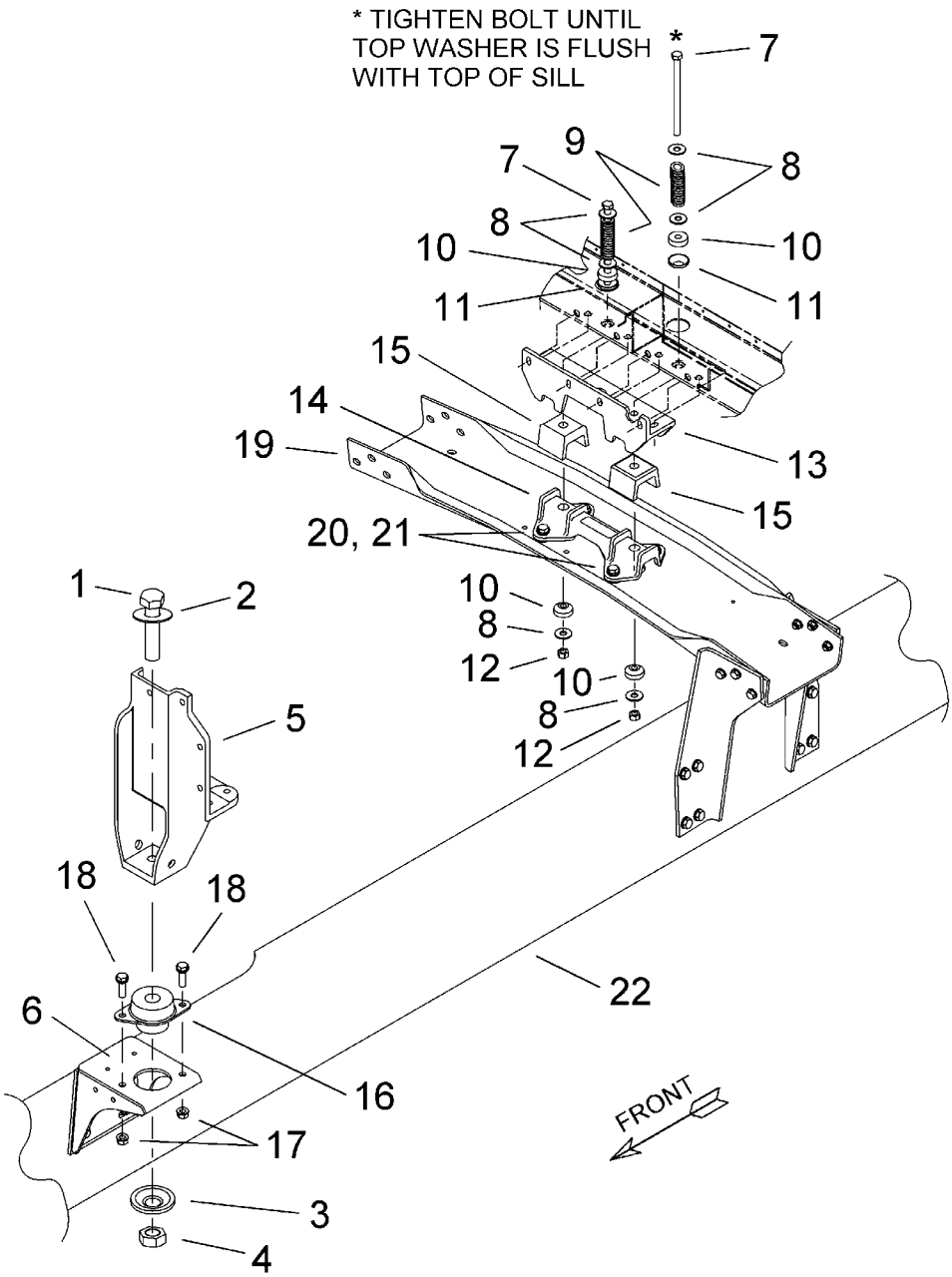

Figure 95 SBA and SFA Cab for 5000*i* Series with Rear Hard Mount after November 1999

1. HEX HEAD BOLT, 3/4–10 UNC X 5 1/2. TIGHTEN TO 185 TO 200 Lbf-ft (251 TO 271 N•m)
2. FLAT WASHER, 3/4
3. FRONT CAB MOUNTING SAFETY STOP
4. HEX LOCK NUT, 3/4–10 UNC. TIGHTEN TO 185 TO 200 Lbf-ft (251 TO 271 N•m)
5. FRONT CAB MOUNTING BRACKET
6. CHASSIS FRONT CAB MOUNTING BRACKET
7. HEX HEAD BOLT, 1/2–13 UNC X 7 1/2
8. FLAT WASHER, 1/2
9. SPRING
10. REAR CAB MOUNTING INSULATOR
11. REAR CAB MOUNTING INSULATOR RETAINER
12. HEX LOCK NUT, 1/2–13 UNC
13. UPPER REAR CAB MOUNTING BRACKET
14. LOWER REAR CAB MOUNTING BRACKET
15. REAR CAB MOUNTING INSULATOR
16. FRONT CAB MOUNTING INSULATOR
17. HEX FLANGED LOCK NUT, 1/2–20 UNF
18. HEX FLANGED HEAD BOLT, 1/2–20 UNF X 1 1/2
19. REAR CAB MOUNTING CROSSMEMBER
20. HEX FLANGED HEAD BOLT, 1/2–20 UNF X 1 1/2. TIGHTEN TO 100 TO 120 Lbf-ft (136 TO 163 N•m)
21. HEX FLANGED LOCK NUT, 1/2–20 UNF. TIGHTEN TO 100 TO 120 Lbf-ft (136 TO 163 N•m)
22. FRAME RAIL

Remove Front Cab Mounting Insulator for SBA and SFA 5000*i* Series with Rear Hard Mount after November 1999

Refer to Figure 95 (See Figure 95, page 117) for Items in parentheses.

1. Once the cab is lifted from the chassis, if it is necessary to replace the front cab mounting insulator (Item 16), driver side shown. Remove as follows.

2. Remove two hex flanged lock nuts (Item 17) from two hex flanged head bolts (Item 18) and remove both hex flanged head bolts. Remove front cab mounting insulator (Item 16 from cab chassis mounting bracket (Item 6), driver side shown. Save front cab mounting insulator, hex flanged lock nuts and hex flanged head bolts for installation unless damaged and being replaced.

3. Repeat procedure to remove passenger side front cab mounting insulator.

Remove SBA Cab for 5000*i* Series with Rear Cab Air Suspension System after August 1994 and SFA Cab for 5000*i* Series with Rear Cab Air Suspension System after August 1996

Refer to Figure 96 (See Figure 96, page 120) for Items in parentheses.

1. To remove SBA Cab for 5000*i* Series with Rear Cab Air Suspension System after August 1994 and SFA Cab for 5000*i* Series with Rear Cab Air Suspension System after August 1996, use the following procedure.

   a. Remove hex head bolt (Item 1), flat washer (Item 2), front cab mounting safety stop (Item 3) and hex lock nut (Item 4) securing front cab mounting bracket (Item 5), located on engine side of cab cowl, to front cab mounting insulator (Item 14) and chassis front cab mounting bracket (Item 6) mounted to frame rail (Item 17), both sides.

   b. Lift the floor mat behind the seats to access the four hex flanged head bolts, unthread each hex flanged head bolt (Item 7) with spacer (Item 8) and flat washer (Item 9) from weld nuts on right side

cab mounting bracket (Item 11) and left side cab mounting bracket (Item 12) of rear cab crossmember support/cab air suspension (Item 13).

c. Unless being replaced, each hex flanged head bolt (Item 7) with spacer (Item 8) and flat washer (Item 9) used to secure the cab to the rear cab crossmember support/cab air suspension (Item 13) can remain in place when the cab is lifted from the chassis.

NOTE – Use an overhead crane and cab lifting fixture when removing cab from chassis. Pad lifting fixture to prevent damage to cab assembly.

2. Carefully lift cab off front cab mounting insulator (Item 14) on chassis front cab mounting bracket (Item 6) and right side cab mounting bracket (Item 11) and left side cab mounting bracket (Item 12) of rear cab crossmember support/cab air suspension (Item 13).

3. Place cab assembly on a padded surface to prevent damage to cab assembly and paint.

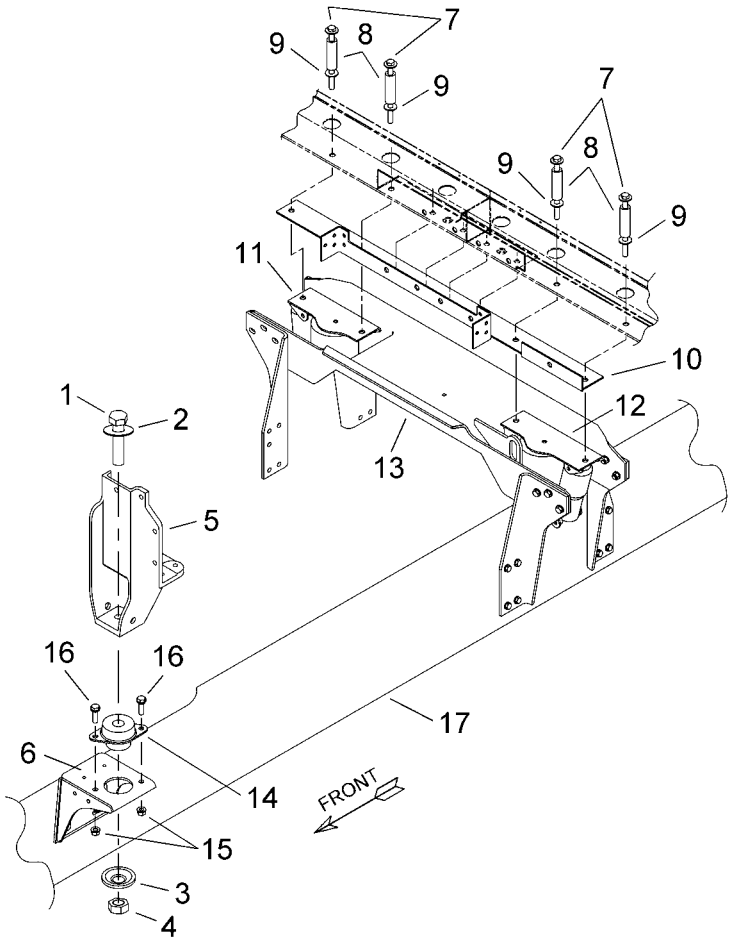

Figure 96 SBA Cab for 5000*i* Series with Rear Cab Air Suspension System after August 1994 and SFA Cab for 5000*i* Series with Rear Cab Air Suspension System after August 1996

1. HEX HEAD BOLT, 3/4–10 UNC X 5 1/2. TIGHTEN TO 185 TO 200 Lbf-ft (251 TO 271 N•m)
2. FLAT WASHER, 3/4
3. FRONT CAB MOUNTING SAFETY STOP
4. HEX LOCK NUT, 3/4–10 UNC. TIGHTEN TO 185 TO 200 Lbf-ft (251 TO 271 N•m)
5. FRONT CAB MOUNTING BRACKET
6. CHASSIS FRONT CAB MOUNTING BRACKET
7. HEX FLANGED HEAD BOLT, 1/2–13 UNC X 71/2
8. SPACER
9. FLAT WASHER
10. CAB AIR SUSPENSION BRACKET MOUNTING PLATE
11. RIGHT SIDE CAB MOUNTING BRACKET
12. LEFT SIDE CAB MOUNTING BRACKET
13. REAR CAB CROSSMEMBER SUPPORT/CAB AIR SUSPENSION
14. FRONT CAB MOUNTING INSULATOR
15. HEX FLANGED LOCK NUT, 1/2–20 UNF
16. HEX FLANGED HEAD BOLT, 1/2–20 UNF X 1 1/2
17. FRAME RAIL

Remove Front Cab Mounting Insulator for SBA Cab for 5000*i* Series with Rear Cab Air Suspension System after August 1994 and SFA Cab for 5000*i* Series with Rear Cab Air Suspension System after August 1996

Refer to Figure 96 (See Figure 96, page 120) for Items in parentheses.

1. Once the cab is lifted from the chassis, if it is necessary to replace the front cab mounting insulator (Item 14), driver side shown. Remove as follows.

2. Remove two hex flanged lock nuts (Item 15) from two hex flanged head bolts (Item 16) and remove both hex flanged head bolts. Remove front cab mounting insulator (Item 14) from cab chassis mounting bracket (Item 6), driver side shown. Save front cab mounting insulator, hex flanged lock nuts and hex flanged head bolts for installation unless damaged and being replaced.

3. Repeat procedure to remove passenger side front cab mounting insulator.

Remove Day Cab for 9100*i*, 9200*i*, 9400*i* and 9900*i* Models with Rear Hard Mount

Refer to Figure 97(See Figure 97, page 122) for Items in parentheses.

1. To remove day cab for 9100*i*, 9200*i*, 9400*i* and 9900*i* models with rear hard mount, use the following procedure.
   a. Remove hex head bolt (Item 1), flat washer (Item 2), front cab mounting safety stop (Item 3), flat washer (Item 4) and hex lock nut (Item 5) securing front cab mounting bracket (Item 6), located on engine side of cab cowl, to front cab mounting insulator (Item 18) and chassis front cab mounting bracket (Item 7) mounted to frame rail (Item 27), both sides.
   b. From underneath lower rear cab mounting bracket (Item 16), remove hex flanged lock nut (Item 14), rear rebound insulator (Item 11) and rebound insulator retainer (Item 13) from each hex head bolt (Item 8).
   c. To access the head of the two hex head bolts (Item 8), lift the floor mat behind the seats, unless being replaced, each hex head bolt (Item 8), flat washer (Item 9), spring (Item 10), rear rebound insulator (Item 11) and rebound insulator retainer (Item 12) used to secure upper rear cab mounting bracket (Item 15) to lower rear cab mounting bracket (Item 16) can remain in place when the cab is lifted from the chassis.

NOTE – Use an overhead crane and cab lifting fixture when removing cab from chassis. Pad lifting fixture to prevent damage to cab assembly.

2. Carefully lift cab off chassis. Once the upper rear cab mounting bracket (Item 15) has cleared the lower rear cab mounting bracket (Item 16), remove two rear cab mounting insulators (Item 17). Save for reinstallation.

3. Place cab assembly on a padded surface to prevent damage to cab assembly and paint.

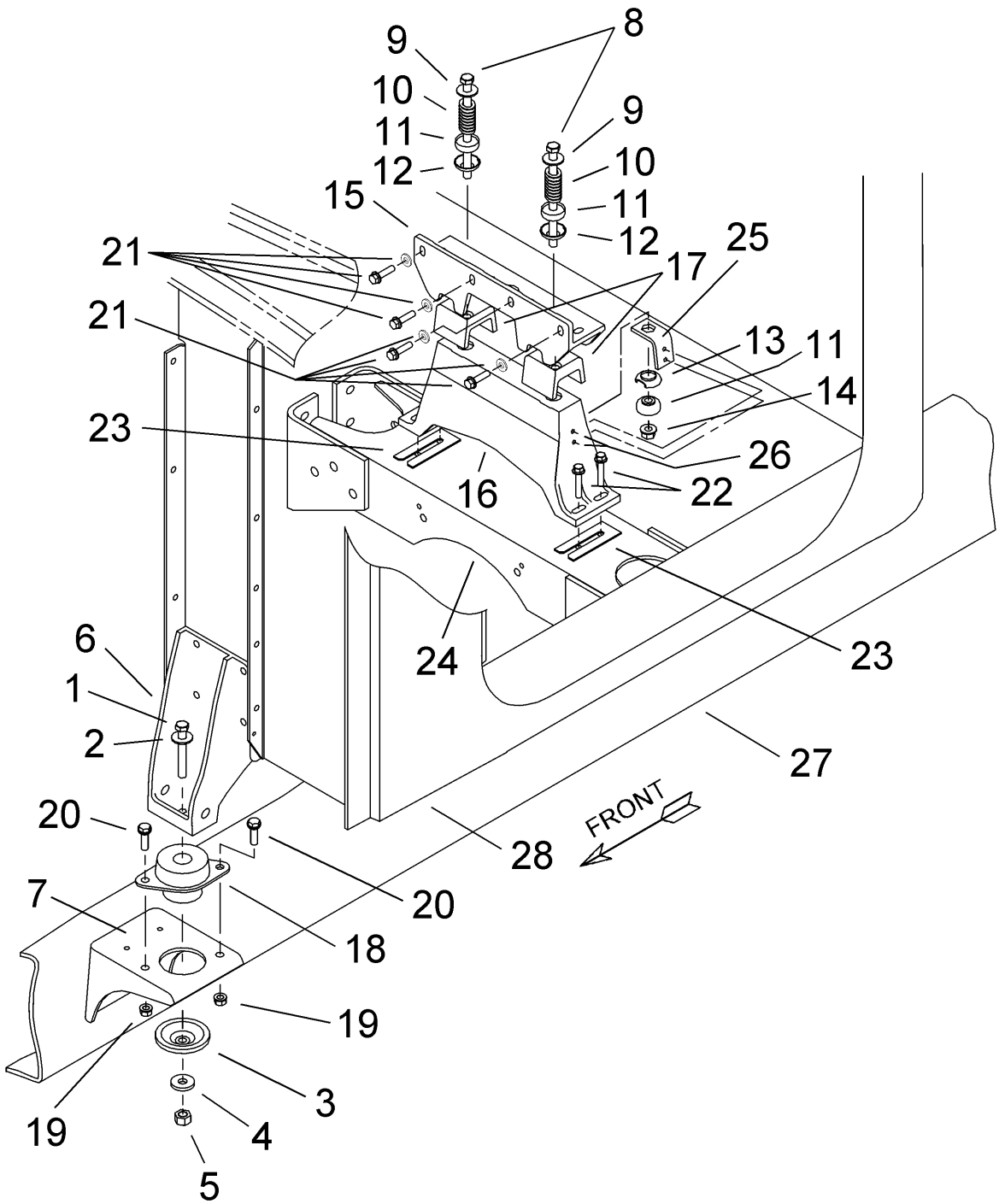

Figure 97 Day Cab for 9100*i*, 9200*i*, 9400*i* and 9900*i* Models with Rear Hard Mount

1. HEX HEAD BOLT, 3/4–10 UNC X 5 1/2
2. FLAT WASHER, 3/4
3. FRONT CAB MOUNTING SAFETY STOP
4. FLAT WASHER, 3/4
5. HEX LOCK NUT, 3/4–10 UNC
6. FRONT CAB MOUNTING BRACKET
7. CHASSIS FRONT CAB MOUNTING BRACKET
8. HEX HEAD BOLT, 1/2–13 UNC X 7 1/2 (TIGHTEN BOLT UNTIL TOP WASHER IS FLUSH WITH TOP OF SILL)
9. FLAT WASHER, 1/2
10. SPRING
11. REAR REBOUND INSULATOR
12. REBOUND INSULATOR RETAINER
13. REBOUND INSULATOR RETAINER
14. HEX FLANGED LOCK NUT, 1/2–13 UNC
15. UPPER REAR CAB MOUNTING BRACKET
16. LOWER REAR CAB MOUNTING BRACKET
17. REAR CAB MOUNTING INSULATOR
18. FRONT CAB MOUNTING INSULATOR
19. HEX FLANGED LOCK NUT, 1/2–20 UNF
20. HEX FLANGED HEAD BOLT, 1/2–20 UNF X 1 1/2
21. HEX FLANGED HEAD BOLT, 3/8–16 UNC X 1 1/2 AND LOCK WASHER
22. HEX FLANGED HEAD BOLT, 3/8–16 UNC X 2, FLAT WASHER, LOCK WASHER AND HEX LOCK NUT, 3/8–16 UNC
23. REAR CAB MOUNTING SPACER
24. CHASSIS CROSSMEMBER
25. CAB INSULATOR MOUNTING BRACKET
26. HEX HEAD BOLT, 1/4–20 UNC X 1 AND HEX LOCK NUT, 1/4–20 UNC
27. FRAME RAIL
28. CAB

Remove Front Cab Mounting Insulator on Day Cab for 9100*i*, 9200*i*, 9400*i* and 9900*i* Models with Rear Hard Mount

Refer to Figure 97 (See Figure 97, page 122) for Items in parentheses.

1. Once the cab is lifted from the chassis, if it is necessary to replace the front cab mounting insulator (Item 18), driver side shown. Remove as follows.

2. Remove two hex flanged lock nuts (Item 19) from two hex flanged head bolts (Item 20) and remove both hex flanged head bolts. Remove front cab mounting insulator (Item 18) from cab chassis mounting bracket (Item 7), driver side shown. Save front cab mounting insulator, hex flanged lock nuts and hex flanged head bolts for installation unless damaged and being replaced.

3. Repeat procedure to remove passenger side front cab mounting insulator.

Remove Day Cab for 9200*i* Models with Detroit Diesel Engines and with Rear Cab Air Suspension System before January 1997

Refer to Figure 98(See Figure 98, page 125) for Items in parentheses.

1. To remove day cab for 9200*i* models with Detroit diesel engines and with rear cab air suspension system before January 1997, use the following procedure.

a. Remove hex head bolt (Item 1), flat washer (Item 2), front cab mounting safety stop (Item 3), flat washer (Item 4) and hex lock nut (Item 5) securing front cab mounting bracket (Item 6), located on engine side of cab cowl, to front cab mounting insulator (Item 13) and chassis front cab mounting bracket (Item 7) mounted to frame rail (Item 16), both sides.

b. To access the head of the two hex head bolts (Item 8), lift the floor mat behind the seats, unless being replaced, each hex head bolt (Item 8), spacer (Item 9), flat washer (Item 10) and flat washer (Item 10) used to secure cab floor and rear cab sill bracket (Item 11) to cab air suspension system (Item 12) can remain in place when the cab is lifted from the chassis.

NOTE – Use an overhead crane and cab lifting fixture when removing cab from chassis. Pad lifting fixture to prevent damage to cab assembly.

2. Place cab assembly on a padded surface to prevent damage to cab assembly and paint.

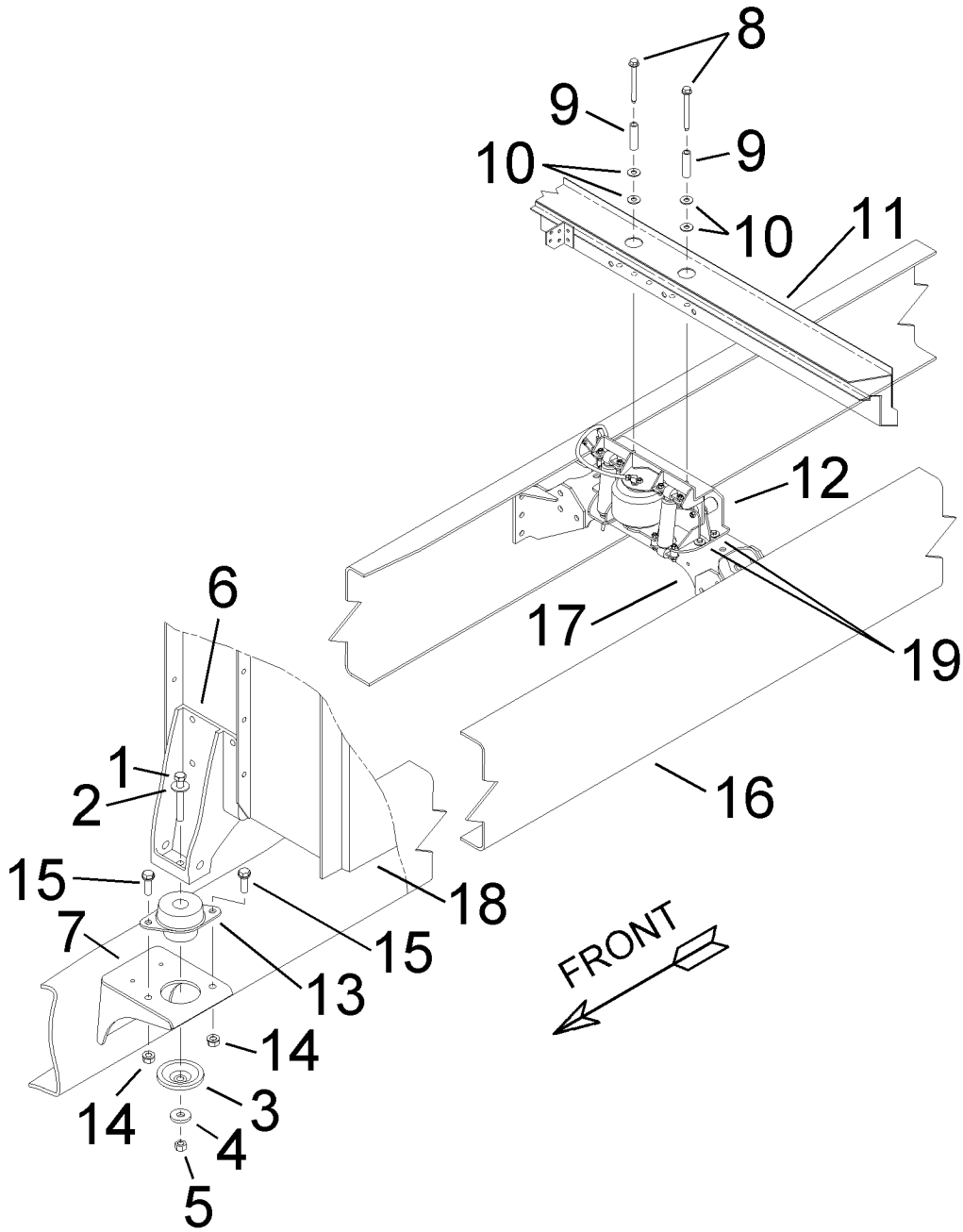

Figure 98 Day Cab for 9200*i* Models with Detroit Diesel Engines and with Rear Cab Air Suspension System before January 1997 and Day Cab for 9100*i* and 9200*i* Models with Rear Cab Air Suspension System after January 1997

1. HEX HEAD BOLT, 3/4–10 UNC X 5 1/2
2. FLAT WASHER, 3/4
3. FRONT CAB MOUNTING SAFETY STOP
4. FLAT WASHER, 3/4
5. HEX LOCK NUT, 3/4–10 UNC
6. FRONT CAB MOUNTING BRACKET
7. CHASSIS FRONT CAB MOUNTING BRACKET
8. HEX FLANGED HEAD BOLT, 1/2–13 UNC X 7 1/2
9. SPACER
10. FLAT WASHER
11. REAR CAB SILL BRACKET
12. CAB AIR SUSPENSION SYSTEM
13. FRONT CAB MOUNTING INSULATOR
14. HEX FLANGED LOCK NUT, 1/2–20 UNF
15. HEX FLANGED HEAD BOLT, 1/2–20 UNF X 1 1/2
16. FRAME RAIL
17. HIGH RISE CHASSIS CROSSMEMBER
18. CAB
19. HEX HEAD BOLT, 3/8–16 UNC X 1 (FOUR), FLAT WASHER, 3/8 (EIGHT), LOCK WASHER, 3/8 (FOUR) AND HEX LOCK NUT, 3/8–16 UNC (FOUR)

Remove Front Cab Mounting Insulator on Day Cab for 9200*i* Models with Detroit Diesel Engines and with Rear Cab Air Suspension System before January 1997

Refer to Figure 98 (See Figure 98, page 125) for Items in parentheses.

1. Once the cab is lifted from the chassis, if it is necessary to replace the front cab mounting insulator (Item 13), driver side shown. Remove as follows.

2. Remove two hex flanged lock nuts (Item 14) from two hex flanged head bolts (Item 15) and remove both hex flanged head bolts. Remove front cab mounting insulator (Item 13) from cab chassis mounting bracket (Item 7), driver side shown. Save front cab mounting insulator, hex flanged lock nuts and hex flanged head bolts for installation unless damaged and being replaced.

3. Repeat procedure to remove passenger side front cab mounting insulator.

Remove Day Cab for 9100*i* and 9200*i* Models without Detroit Diesel Engines and with Rear Cab Air Suspension System after January 1997

Refer to Figure 98(See Figure 98, page 125) for Items in parentheses.

1. To remove day cab for 9100*i* and 9200*i* models without Detroit diesel engines and with rear cab air suspension system after January 1997, use the following procedure.

   a. Remove hex head bolt (Item 1), flat washer (Item 2), front cab mounting safety stop (Item 3), flat washer (Item 4) and hex lock nut (Item 5) securing front cab mounting bracket (Item 6), located on engine side of cab cowl, to front cab mounting insulator (Item 13) and chassis front cab mounting bracket (Item 7) mounted to frame rail (Item 16), both sides.

   b. To access the head of the two hex head bolts (Item 8), lift the floor mat behind the seats, unless being replaced, each hex head bolt (Item 8), spacer (Item 9), flat washer (Item 10) and flat washer (Item 10) used to secure cab floor and rear cab sill bracket (Item 11) to cab air suspension system (Item 12) can remain in place when the cab is lifted from the chassis.

NOTE – Use an overhead crane and cab lifting fixture when removing cab from chassis. Pad lifting fixture to prevent damage to cab assembly.

2. Place cab assembly on a padded surface to prevent damage to cab assembly and paint.

Remove Front Cab Mounting Insulator on Day Cab for 9100*i* and 9200*i* Models without Detroit Diesel Engines and with Rear Cab Air Suspension System after January 1997

Refer to Figure 98 (See Figure 98, page 125) for Items in parentheses.

1. Once the cab is lifted from the chassis, if it is necessary to replace the front cab mounting insulator (Item 13), driver side shown. Remove as follows.

2. Remove two hex flanged lock nuts (Item 14) from two hex flanged head bolts (Item 15) and remove both hex flanged head bolts. Remove front cab mounting insulator (Item 13) from cab chassis mounting bracket (Item 7), driver side shown. Save front cab mounting insulator, hex flanged lock nuts and hex flanged head bolts for installation unless damaged and being replaced.

3. Repeat procedure to remove passenger side front cab mounting insulator.

Remove Day Cab for 9200*i*Models with Detroit Diesel Engines and with Rear Cab Air Suspension System before March 1997

Refer to Figure 99(See Figure 99, page 128) for Items in parentheses.

1. To remove day cab for 9200*i* models with Detroit diesel engines and with rear cab air suspension system before March 1997, use the following procedure.
   a. Remove hex head bolt (Item 1), flat washer (Item 2), front cab mounting safety stop (Item 3), flat washer (Item 4) and hex lock nut (Item 5) securing front cab mounting bracket (Item 6), located on engine side of cab cowl, to front cab mounting insulator (Item 13) and chassis front cab mounting bracket (Item 7) mounted to frame rail (Item 16), both sides.
   b. To access the head of the two hex flanged head bolts (Item 8), lift the floor mat behind the seats, unless being replaced, each hex flanged head bolt (Item 8), spacer (Item 9), flat washer (Item 10) and flat washer (Item 10) used to secure cab floor and rear cab sill bracket (Item 11) to cab air suspension system (Item 12) can remain in place when the cab is lifted from the chassis.

NOTE – Use an overhead crane and cab lifting fixture when removing cab from chassis. Pad lifting fixture to prevent damage to cab assembly.

2. Place cab assembly on a padded surface to prevent damage to cab assembly and paint.

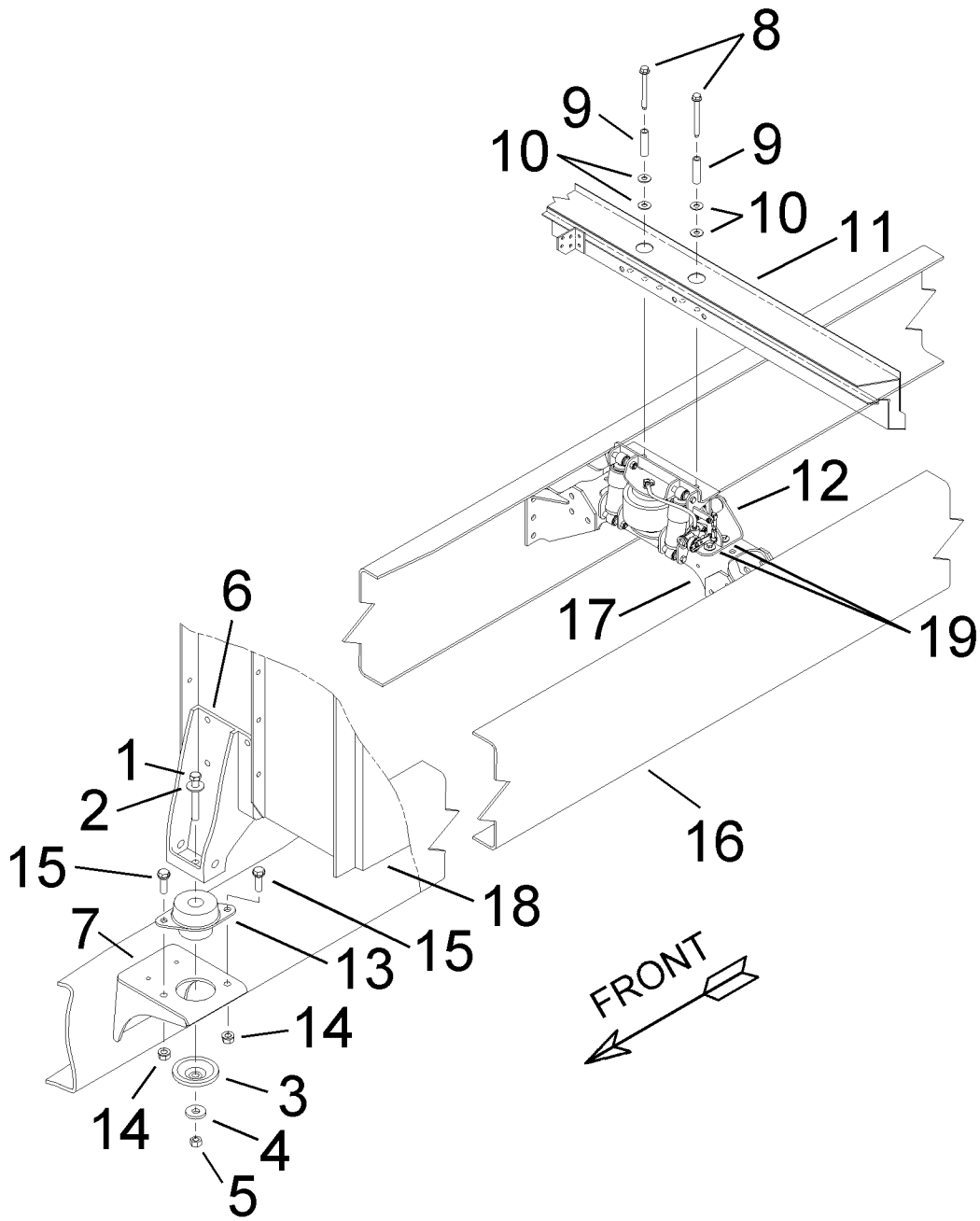

Figure 99 Day Cab for 9200*i* Models with Detroit Diesel Engines and with Rear Cab Air Suspension System before March 1997 and Day Cab for 9100*i* and 9200*i* Models with Rear Cab Air Suspension System after March 1997

1. HEX HEAD BOLT, 3/4–10 UNC X 5 1/2
2. FLAT WASHER, 3/4
3. FRONT CAB MOUNTING SAFETY STOP
4. FLAT WASHER, 3/4
5. HEX LOCK NUT, 3/4–10 UNC
6. FRONT CAB MOUNTING BRACKET
7. CHASSIS FRONT CAB MOUNTING BRACKET
8. HEX FLANGED HEAD BOLT, 1/2–13 UNC X 7 1/2
9. SPACER
10. FLAT WASHER
11. REAR CAB SILL BRACKET
12. CAB AIR SUSPENSION SYSTEM
13. FRONT CAB MOUNTING INSULATOR
14. HEX FLANGED LOCK NUT, 1/2–20 UNF
15. HEX FLANGED HEAD BOLT, 1/2–20 UNF X 1 1/2
16. FRAME RAIL
17. HIGH RISE CHASSIS CROSSMEMBER
18. CAB
19. HEX HEAD BOLT, 3/8–16 UNC X 1 (FOUR), FLAT WASHER, 3/8 (EIGHT), LOCK WASHER, 3/8 (FOUR) AND HEX LOCK NUT, 3/8–16 UNC (FOUR)

Remove Front Cab Mounting Insulator on Day Cab for 9200*i* Models with Detroit Diesel Engines and with Rear Cab Air Suspension System before March 1997

Refer to Figure 99 (See Figure 99, page 128) for Items in parentheses.

1. Once the cab is lifted from the chassis, if it is necessary to replace the front cab mounting insulator (Item 13), driver side shown. Remove as follows.

2. Remove two hex flanged lock nuts (Item 14) from two hex flanged head bolts (Item 15) and remove both hex flanged head bolts. Remove front cab mounting insulator (Item 13) from cab chassis mounting bracket (Item 7), driver side shown. Save front cab mounting insulator, hex flanged lock nuts and hex flanged head bolts for installation unless damaged and being replaced.

3. Repeat procedure to remove passenger side front cab mounting insulator.

Remove Day Cab for 9100*i* and 9200*i* Models without Detroit Diesel Engines and with Rear Cab Air Suspension System after March 1997

Refer to Figure 99(See Figure 99, page 128) for Items in parentheses.

1. To remove day cab for 9100*i* and 9200*i* models without Detroit diesel engines and with rear cab air suspension system after March 1997, use the following procedure.

   a. Remove hex head bolt (Item 1), flat washer (Item 2), front cab mounting safety stop (Item 3), flat washer (Item 4) and hex lock nut (Item 5) securing front cab mounting bracket (Item 6), located on engine side of cab cowl, to front cab mounting insulator (Item 13) and chassis front cab mounting bracket (Item 7) mounted to frame rail (Item 16), both sides.

   b. To access the head of the two hex flanged head bolts (Item 8), lift the floor mat behind the seats, unless being replaced, each hex flanged head bolt (Item 8), spacer (Item 9), flat washer (Item 10) and flat washer (Item 10) used to secure cab floor and rear cab sill bracket (Item 11) to cab air suspension system (Item 12) can remain in place when the cab is lifted from the chassis.

NOTE – Use an overhead crane and cab lifting fixture when removing cab from chassis. Pad lifting fixture to prevent damage to cab assembly.

2. Place cab assembly on a padded surface to prevent damage to cab assembly and paint.

Remove Front Cab Mounting Insulator on Day Cab for 9100*i* and 9200*i* Models without Detroit Diesel Engines and with Rear Cab Air Suspension System after March 1997

Refer to Figure 99 (See Figure 99, page 128) for Items in parentheses.

1. Once the cab is lifted from the chassis, if it is necessary to replace the front cab mounting insulator (Item 13), driver side shown. Remove as follows.

2. Remove two hex flanged lock nuts (Item 14) from two hex flanged head bolts (Item 15) and remove both hex flanged head bolts. Remove front cab mounting insulator (Item 13) from cab chassis mounting bracket (Item 7), driver side shown. Save front cab mounting insulator, hex flanged lock nuts and hex flanged head bolts for installation unless damaged and being replaced.

3. Repeat procedure to remove passenger side front cab mounting insulator.

Remove Day Cab with High Rise Crossmember for 9100*i*, 9200*i*, 9400*i* and 9900*i* Models with Rear Cab Air Suspension System after December 2001

Refer to Figure 100(See Figure 100, page 131) for Items in parentheses.

1. To remove day cab with high rise crossmember for 9100*i*, 9200*i*, 9400*i* and 9900*i* models with rear cab air suspension system after December 2001, use the following procedure.
   a. Remove hex head bolt (Item 1), flat washer (Item 2), front cab mounting safety stop (Item 3), flat washer (Item 4) and hex lock nut (Item 5) securing front cab mounting bracket (Item 6), located on engine side of cab cowl, to front cab mounting insulator (Item 13) and chassis front cab mounting bracket (Item 7) mounted to frame rail (Item 16), both sides.
   b. To access the head of the two hex flanged head bolts (Item 8), lift the floor mat behind the seats, unless being replaced, each hex flanged head bolt (Item 8), spacer (Item 9), flat washer (Item 10) and flat washer (Item 10) used to secure cab floor and rear cab sill bracket (Item 11) to cab air suspension system (Item 12) can remain in place when the cab is lifted from the chassis.

NOTE – Use an overhead crane and cab lifting fixture when removing cab from chassis. Pad lifting fixture to prevent damage to cab assembly.

2. Place cab assembly on a padded surface to prevent damage to cab assembly and paint.

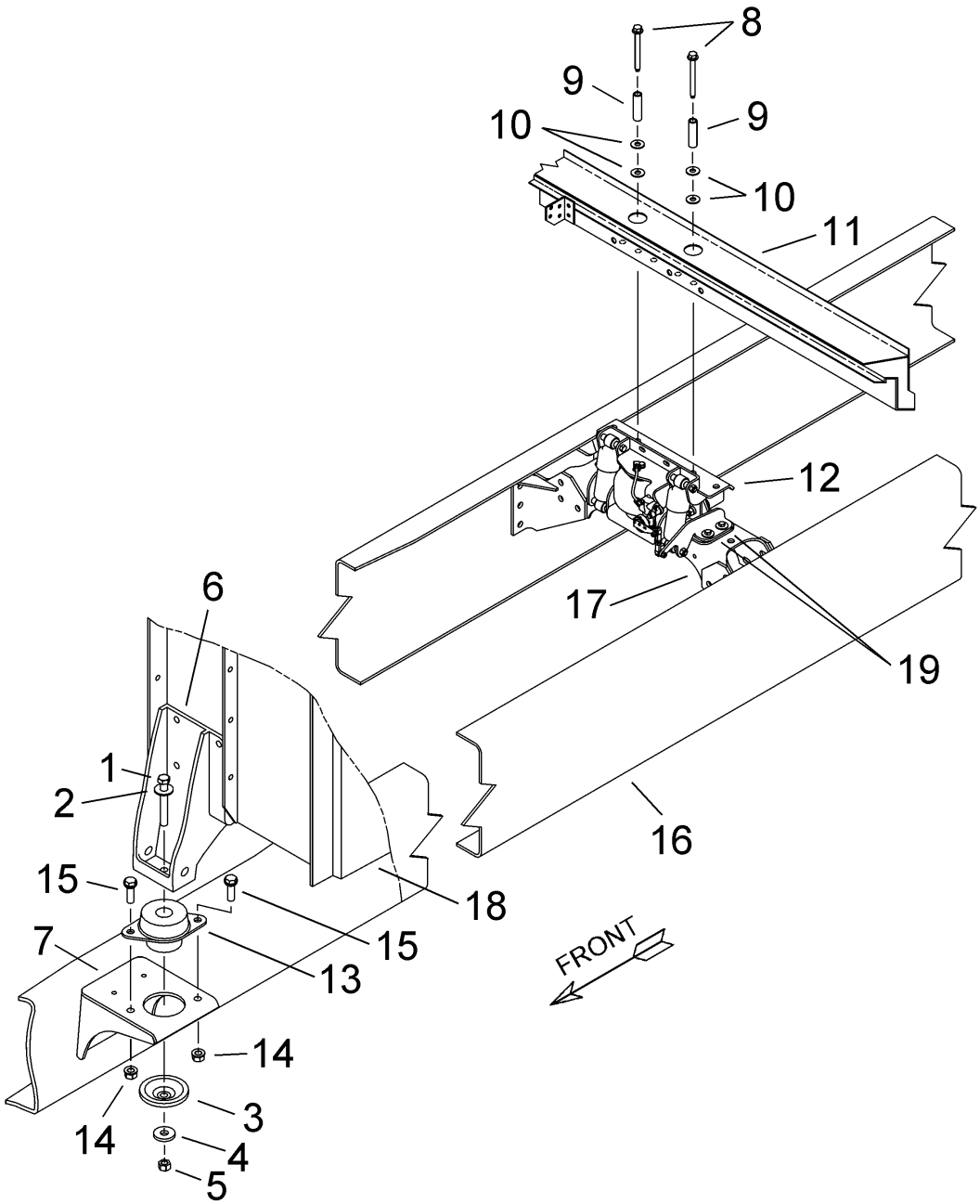

Figure 100 Day Cab with High Rise Crossmember for 9100*i*, 9200*i*, 9400*i* and 9900*i* Models with Rear Cab Air Suspension System after December 2001

1. HEX HEAD BOLT, 3/4–10 UNC X 5 1/2
2. FLAT WASHER, 3/4
3. FRONT CAB MOUNTING SAFETY STOP
4. FLAT WASHER, 3/4
5. HEX LOCK NUT, 3/4–10 UNC
6. FRONT CAB MOUNTING BRACKET
7. CHASSIS FRONT CAB MOUNTING BRACKET
8. HEX FLANGED HEAD BOLT, 1/2–13 UNC X 7 1/2
9. SPACER
10. FLAT WASHER
11. REAR CAB SILL BRACKET
12. CAB AIR SUSPENSION SYSTEM
13. FRONT CAB MOUNTING INSULATOR
14. HEX FLANGED LOCK NUT, 1/2–20 UNF
15. HEX FLANGED HEAD BOLT, 1/2–20 UNF X 1 1/2
16. FRAME RAIL
17. HIGH RISE CHASSIS CROSSMEMBER
18. CAB
19. HEX HEAD BOLT, 3/8–16 UNC X 1 (FOUR), FLAT WASHER, 3/8 (EIGHT), LOCK WASHER, 3/8 (FOUR) AND HEX LOCK NUT, 3/8–16 UNC (FOUR)

Remove Front Cab Mounting Insulator on Day Cab with High Rise Crossmember for 9100*i*, 9200*i*, 9400*i* and 9900*i* Models with Rear Cab Air Suspension System after December 2001

Refer to Figure 100 (See Figure 100, page 131) for Items in parentheses.

1. Once the cab is lifted from the chassis, if it is necessary to replace the front cab mounting insulator (Item 13), driver side shown. Remove as follows.

2. Remove two hex flanged lock nuts (Item 14) from two hex flanged head bolts (Item 15) and remove both hex flanged head bolts. Remove front cab mounting insulator (Item 13) from cab chassis mounting bracket (Item 7), driver side shown. Save front cab mounting insulator, hex flanged lock nuts and hex flanged head bolts for installation unless damaged and being replaced.

3. Repeat procedure to remove passenger side front cab mounting insulator.

Remove Day Cab with Standard 7 Piece Crossmember for 9400*i* and 9900*i* Models with Rear Cab Air Suspension System after December 2001

Refer to Figure 101(See Figure 101, page 134) for Items in parentheses.

1. To remove day cab with standard 7 piece crossmember for 9400*i* and 9900*i* models with rear cab air suspension system, use the following procedure.

   a. Remove hex head bolt (Item 1), flat washer (Item 2), front cab mounting safety stop (Item 3), flat washer (Item 4) and hex lock nut (Item 5) securing front cab mounting bracket (Item 6), located on engine side of cab cowl, to front cab mounting insulator (Item 13) and chassis front cab mounting bracket (Item 7) mounted to frame rail (Item 16), both sides.

   b. To access the head of the two hex flanged head bolts (Item 8), lift the floor mat behind the seats, unless being replaced, each hex flanged head bolt (Item 8), spacer (Item 9) and flat washer (Item 10) used to secure cab floor and rear cab sill bracket (Item 11) to cab air suspension system (Item 12) can remain in place when the cab is lifted from the chassis.

NOTE – Use an overhead crane and cab lifting fixture when removing cab from chassis. Pad lifting fixture to prevent damage to cab assembly.

2. Place cab assembly on a padded surface to prevent damage to cab assembly and paint.

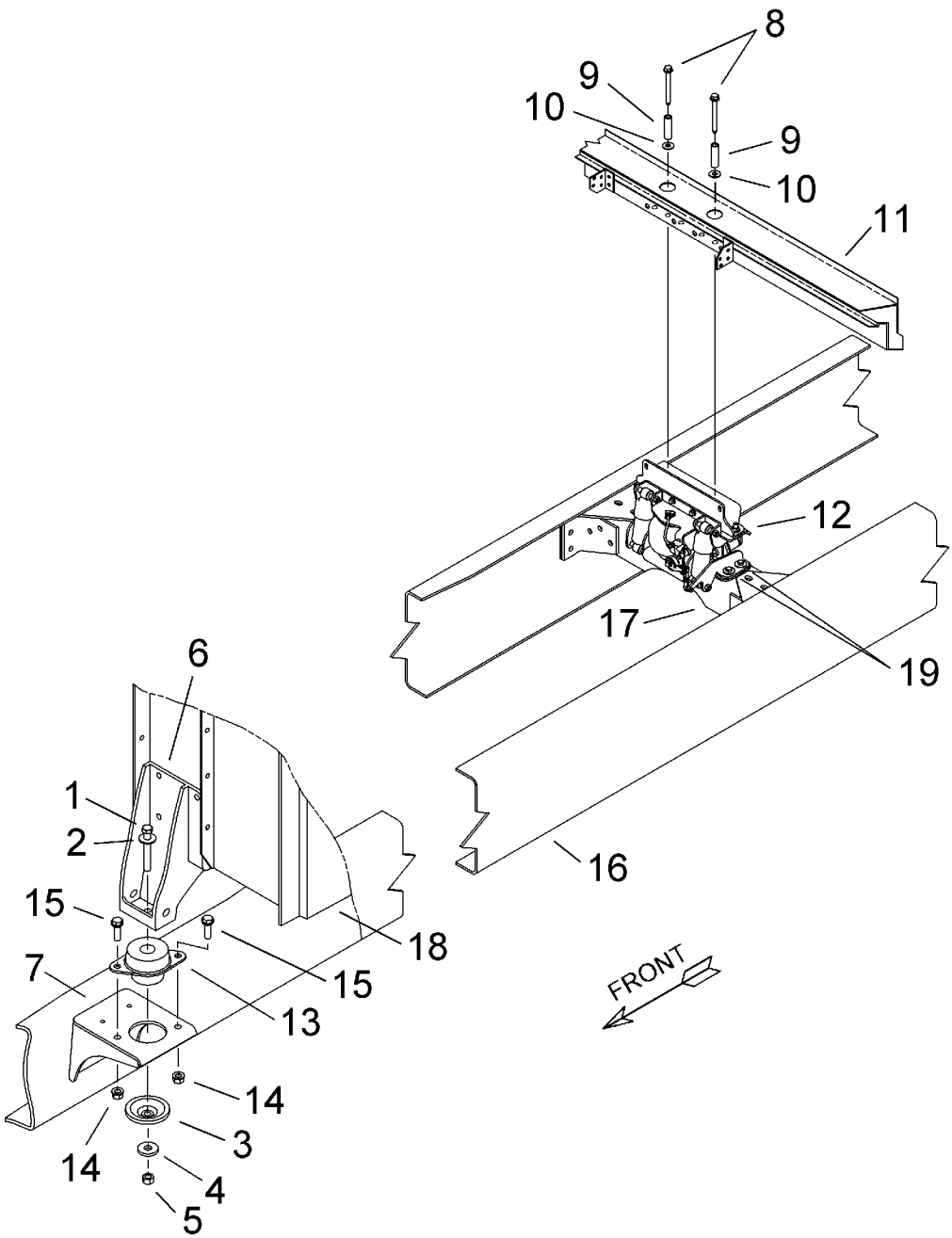

Figure 101 Day Cab with Standard 7 Piece Crossmember for 9400*i* and 9900*i* Models with Rear Cab Air Suspension System after December 2001

1. HEX HEAD BOLT, 3/4–10 UNC X 5 1/2
2. FLAT WASHER, 3/4
3. FRONT CAB MOUNTING SAFETY STOP
4. FLAT WASHER, 3/4
5. HEX LOCK NUT, 3/4–10 UNC
6. FRONT CAB MOUNTING BRACKET
7. CHASSIS FRONT CAB MOUNTING BRACKET
8. HEX FLANGED HEAD BOLT
9. SPACER
10. FLAT WASHER
11. REAR CAB SILL BRACKET
12. CAB AIR SUSPENSION SYSTEM
13. FRONT CAB MOUNTING INSULATOR
14. HEX FLANGED LOCK NUT, 1/2–20 UNF
15. HEX FLANGED HEAD BOLT, 1/2–20 UNF X 1 1/2
16. FRAME RAIL
17. STANDARD 7 PIECE CHASSIS CROSSMEMBER
18. CAB
19. HEX HEAD BOLT, 3/8–16 UNC X 1 (FOUR), FLAT WASHER, 3/8 (EIGHT), LOCK WASHER, 3/8 (FOUR) AND HEX LOCK NUT, 3/8–16 UNC (FOUR)

Remove Front Cab Mounting Insulator on Day Cab with Standard 7 Piece Crossmember for 9400*i* and 9900*i* Models with Rear Cab Air Suspension System after December 2001

Refer to Figure 101 (See Figure 101, page 134) for Items in parentheses.

1. Once the cab is lifted from the chassis, if it is necessary to replace the front cab mounting insulator (Item 13), driver side shown. Remove as follows.

2. Remove two hex flanged lock nuts (Item 14) from two hex flanged head bolts (Item 15) and remove both hex flanged head bolts. Remove front cab mounting insulator (Item 13) from chassis front cab mounting bracket (Item 7), driver side shown. Save front cab mounting insulator, hex flanged lock nuts and hex flanged head bolts for installation unless damaged and being replaced.

3. Repeat procedure to remove passenger side front cab mounting insulator.

Remove 51 Inch or 72 Inch Pro-Sleeper® Cab for 9200*i* and 9400*i* Models with Rear Cab Air Suspension System

Refer to Figure 102 (See Figure 102, page 137) for Items in parentheses.

1. To remove 51 Inch or 72 Inch pro-sleeper® cab for 9200*i* and 9400*i* models with rear cab air suspension system, use the following procedure.

   a. Remove hex head bolt (Item 1), flat washer (Item 2), front cab mounting safety stop (Item 3), flat washer (Item 4) and hex lock nut (Item 5) securing front cab mounting bracket (Item 6), located on engine side of cab cowl, to front cab mounting insulator (Item 12) and chassis front cab mounting bracket (Item 7) mounted to frame rail (Item 15), both sides.

   b. To access the head of the six hex head bolts (Item 8), lift the floor mat inside the bunk, unless being replaced, each hex head bolt (Item 8) and flat washer (Item 9) used to secure cab floor and rear cab sill bracket (Item 10) to cab air suspension system (Item 11) can remain in place when the cab is lifted from the chassis.

NOTE – Use an overhead crane and cab lifting fixture when removing cab from chassis. Pad lifting fixture to prevent damage to cab assembly.

2. Place cab assembly on a padded surface to prevent damage to cab assembly and paint.

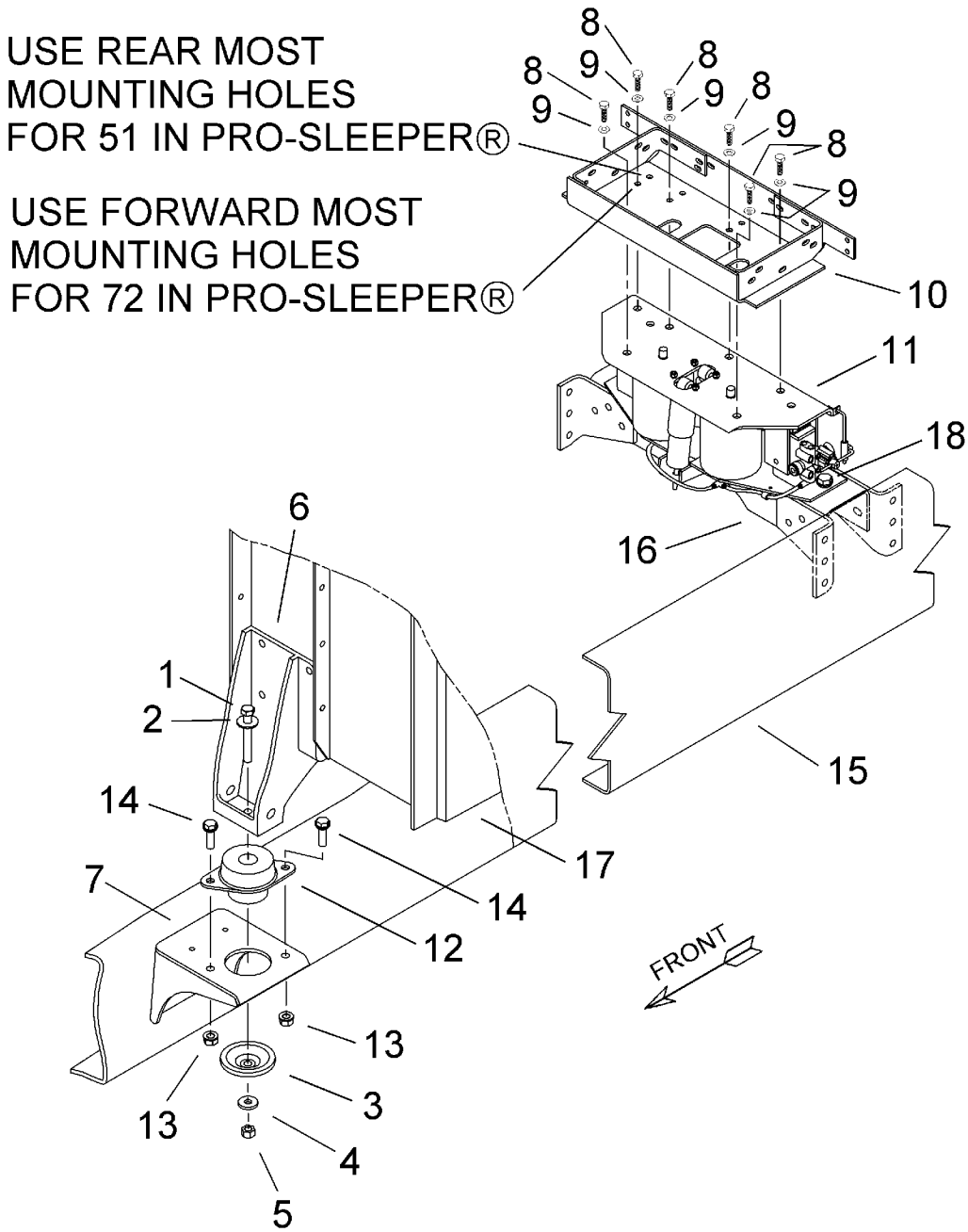

Figure 102 51 Inch or 72 Inch Pro-Sleeper® Cab for 9200*i* and 9400*i* Models with Rear Cab Air Suspension System

1. HEX HEAD BOLT, 5/8–11 UNC X 5
2. FLAT WASHER, 5/8
3. FRONT CAB MOUNTING SAFETY STOP
4. FLAT WASHER, 5/8
5. HEX LOCK NUT, 5/8–11 UNC
6. FRONT CAB MOUNTING BRACKET
7. CHASSIS FRONT CAB MOUNTING BRACKET
8. HEX HEAD BOLT, 1/2–13 UNF X 1 1/4
9. FLAT WASHER, 1/2
10. REAR CAB SILL BRACKET
11. CAB AIR SUSPENSION SYSTEM
12. FRONT CAB MOUNTING INSULATOR
13. HEX FLANGED LOCK NUT, 1/2–20 UNF
14. HEX FLANGED HEAD BOLT, 1/2–20 UNF X 1 1/2
15. FRAME RAIL
16. CHASSIS CROSSMEMBER
17. CAB
18. HEX FLANGED HEAD BOLT, 5/8–18 UNF X 2

Remove Front Cab Mounting Insulator on 51 Inch or 72 Inch Pro-Sleeper® Cab for 9200*i* and 9400*i* Models with Rear Cab Air Suspension System

Refer to Figure 102 (See Figure 102, page 137) for Items in parentheses.

1. Once the cab is lifted from the chassis, if it is necessary to replace the front cab mounting insulator (Item 12), driver side shown. Remove as follows.

2. Remove two hex flanged lock nuts (Item 13) from two hex flanged head bolts (Item 14) and remove both hex flanged head bolts. Remove front cab mounting insulator (Item 12) from chassis front cab mounting bracket (Item 7), driver side shown. Save front cab mounting insulator, hex flanged lock nuts and hex flanged head bolts for installation unless damaged and being replaced.

3. Repeat procedure to remove passenger side front cab mounting insulator.

Remove 51 Inch Pro-Sleeper® Cab for 9200*i*, 9400*i* and 9900*i* Models with Rear Cab Air Suspension System on Vehicles after April 2000

Refer to Figure 103(See Figure 103, page 140) for Items in parentheses.

1. To remove 51 inch pro-sleeper® cab for 9200*i*, 9400*i* and 9900*i* models with rear cab air suspension system on vehicles after April 2000, use the following procedure.

   NOTE – On 9900 vehicles manufactured at Escobedo there will be two flat washers (Item 2) found on each side under hex head bolt (Item 1).

   a. Remove hex head bolt (Item 1), flat washer (Item 2), front cab mounting safety stop (Item 3), flat washer (Item 4) and hex lock nut (Item 5) securing front cab mounting bracket (Item 6), located on engine side of cab cowl, to front cab mounting insulator (Item 11) and chassis front cab mounting bracket (Item 7) mounted to frame rail (Item 14), both sides.

   b. To access the head of the six hex head screw sems assemblies (Item 8), lift the floor mat inside the bunk.

   c. Remove six hex head screw sems assemblies (Item 8) securing cab floor and rear cab sill bracket (Item 9) to rear cab air suspension assembly (Item 10).

NOTE – Use an overhead crane and cab lifting fixture when removing cab from chassis. Pad lifting fixture to prevent damage to cab assembly.

2. Place cab assembly on a padded surface to prevent damage to cab assembly and paint.

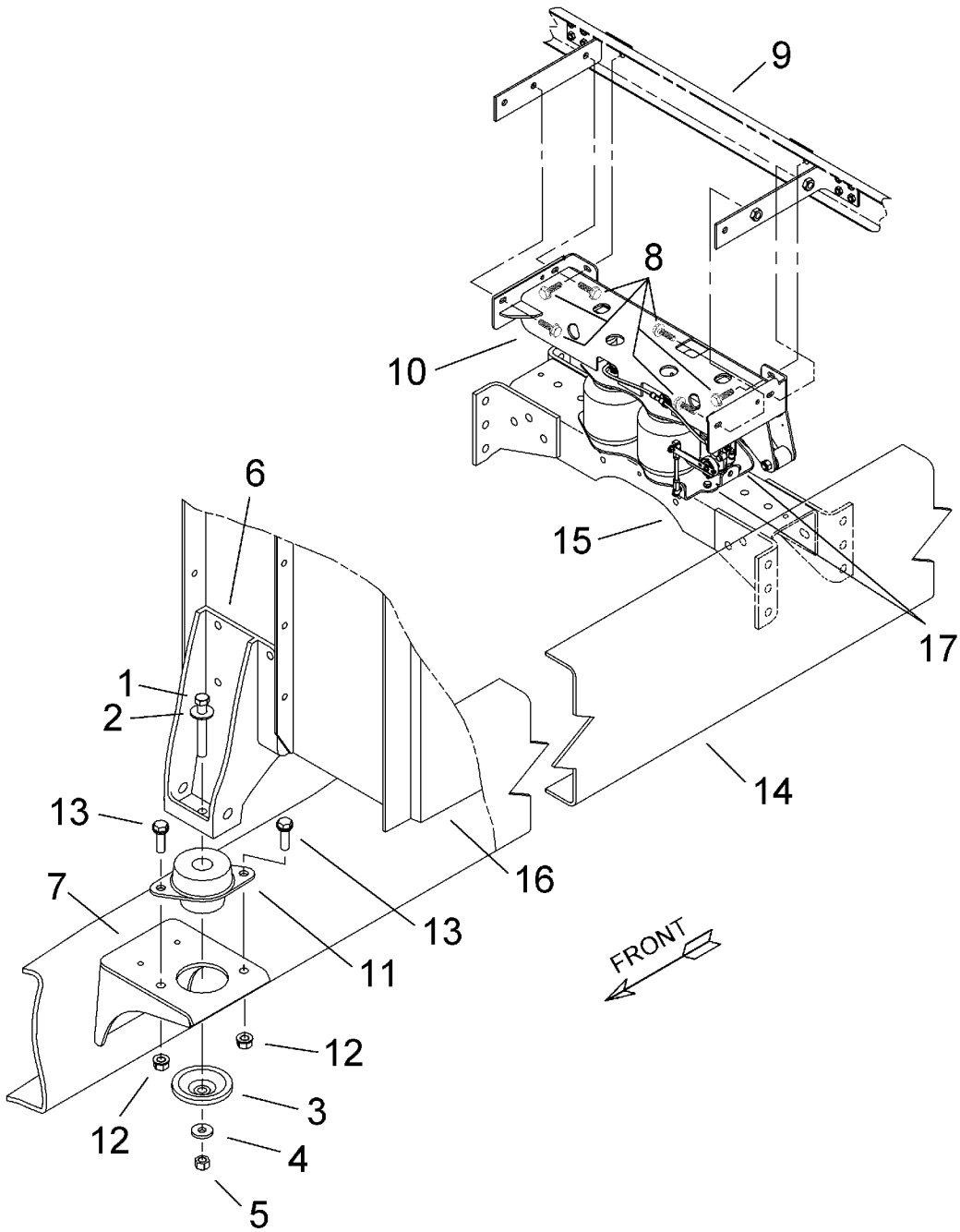

Figure 103 51 Inch Pro-Sleeper® Cab for 9200*i*, 9400*i* and 9900*i* Models with Rear Cab Air Suspension System on Vehicles after April 2000

1. HEX HEAD BOLT, 3/4–10 UNC X 5 1/2
2. FLAT WASHER, 3/4
3. FRONT CAB MOUNTING SAFETY STOP
4. FLAT WASHER, 3/4
5. HEX LOCK NUT, 3/4–10 UNC
6. FRONT CAB MOUNTING BRACKET
7. CHASSIS FRONT CAB MOUNTING BRACKET
8. HEX HEAD SCREW SEMS ASSEMBLY, 3/8–16 X 1 1/4
9. REAR CAB SILL BRACKET
10. CAB AIR SUSPENSION SYSTEM
11. FRONT CAB MOUNT INSULATOR
12. HEX FLANGED LOCK NUT, 1/2–20 UNF
13. HEX FLANGED HEAD BOLT, 1/2–20 UNF X 1 1/2
14. FRAME RAIL
15. CHASSIS CROSSMEMBER
16. CAB
17. HEX HEAD SCREW SEMS ASSEMBLY, 3/8–16 X 1 1/4

Remove Front Cab Mounting Insulator on 51 Inch Pro-Sleeper® Cab for 9200*i*, 9400*i* and 9900*i* Models with Rear Cab Air Suspension System on Vehicles after April 2000

Refer to Figure 103 (See Figure 103, page 140) for Items in parentheses.

1. Once the cab is lifted from the chassis, if it is necessary to replace the front cab mounting insulator (Item 11), driver side shown. Remove as follows.

2. Remove two hex flanged lock nuts (Item 12) from two hex flanged head bolts (Item 13) and remove both hex flanged head bolts. Remove front cab mounting insulator (Item 11) from chassis front cab mounting bracket (Item 7), driver side shown. Save front cab mounting insulator, hex flanged lock nuts and hex flanged head bolts for installation unless damaged and being replaced.

3. Repeat procedure to remove passenger side front cab mounting insulator.

Remove 72 Inch Pro-Sleeper® Cab for 9200*i*, 9400*i* and 9900*i* Models with Rear Cab Air Suspension System on Vehicles after April 2000

Refer to Figure 104(See Figure 104, page 143) for Items in parentheses unless otherwise noted.

1. To remove 72 inch pro-sleeper® cab for 9200*i*, 9400*i* and 9900*i* models with rear cab air suspension system on vehicles after April 2000, use the following procedure.

   NOTE – On 9900 vehicles manufactured at Escobedo there will be two flat washers (Item 2) found on each side under hex head bolt (Item 1).

   a. Remove hex head bolt (Item 1), flat washer (Item 2), front cab mounting safety stop (Item 3), flat washer (Item 4) and hex lock nut (Item 5) securing front cab mounting bracket (Item 6), located on engine side of cab cowl, to front cab mounting insulator (Item 11) and chassis front cab mounting bracket (Item 7) mounted to frame rail (Item 14), both sides.

   b. To access the head of the six hex head screw sems assemblies (Item 8), lift the floor mat inside the bunk.

   c. Remove six hex head screw sems assemblies (Item 8) securing cab floor and rear cab sill bracket (Figure 103, Item 9)(See Figure 103, page 140) to rear cab air suspension assembly (Item 10).

NOTE – Use an overhead crane and cab lifting fixture when removing cab from chassis. Pad lifting fixture to prevent damage to cab assembly.

2. Place cab assembly on a padded surface to prevent damage to cab assembly and paint.

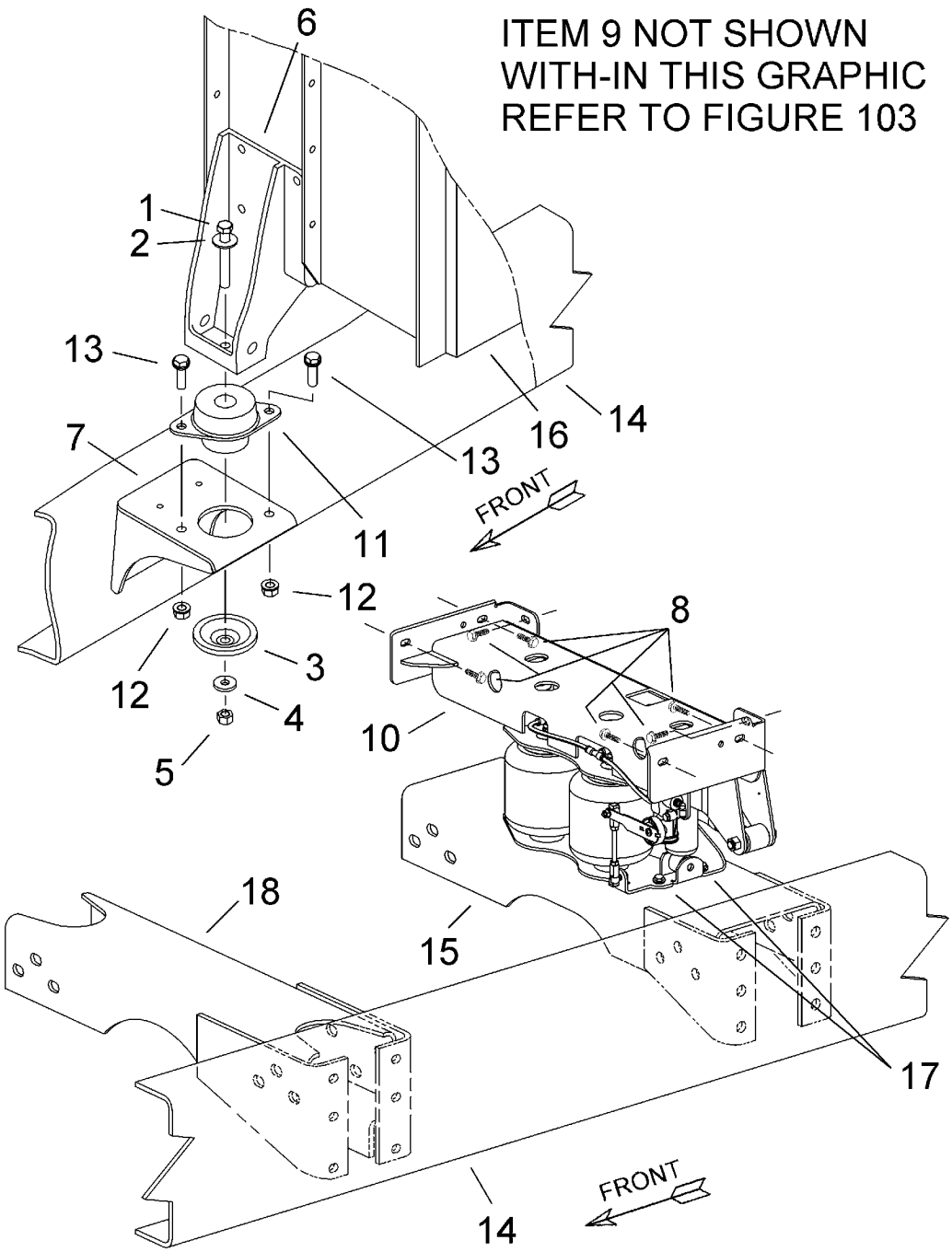

Figure 104 72 Inch Pro-Sleeper® Cab for 9200*i*, 9400*i* and 9900*i* Models with Rear Cab Air Suspension System on Vehicles after April 2000

1. HEX HEAD BOLT, 3/4–10 UNC X 5 1/2
2. FLAT WASHER, 3/4
3. FRONT CAB MOUNTING SAFETY STOP
4. FLAT WASHER, 3/4
5. HEX LOCK NUT, 3/4–10 UNC
6. FRONT CAB MOUNTING BRACKET
7. CHASSIS FRONT CAB MOUNTING BRACKET
8. HEX HEAD SCREW SEMS ASSEMBLY, 3/8–16 X 1 1/4
9. NOT SHOWN WITH-IN THIS GRAPHIC REFER TO FIGURE 103
10. CAB AIR SUSPENSION SYSTEM
11. FRONT CAB MOUNT INSULATOR
12. HEX FLANGED LOCK NUT, 1/2–20 UNF
13. HEX FLANGED HEAD BOLT, 1/2–20 UNF X 1 1/2
14. FRAME RAIL
15. REARWARD CHASSIS CROSSMEMBER
16. CAB
17. HEX HEAD SCREW SEMS ASSEMBLY, 3/8–16 X 1 1/4
18. FORWARD CHASSIS CROSSMEMBER

Remove Front Cab Mounting Insulator on 72 Inch Pro-Sleeper® Cab for 9200*i*, 9400*i* and 9900*i* Models with Rear Cab Air Suspension System on Vehicles after April 2000

Refer to Figure 104 (See Figure 104, page 143) for Items in parentheses.

1. Once the cab is lifted from the chassis, if it is necessary to replace the front cab mounting insulator (Item 11), driver side shown. Remove as follows.

2. Remove two hex flanged lock nuts (Item 12) from two hex flanged head bolts (Item 13) and remove both hex flanged head bolts. Remove front cab mounting insulator (Item 11) from chassis front cab mounting bracket (Item 7), driver side shown. Save front cab mounting insulator, hex flanged lock nuts and hex flanged head bolts for installation unless damaged and being replaced.

3. Repeat procedure to remove passenger side front cab mounting insulator.

4.38. CAB AIR RIDE SYSTEM FOR 9200*I*/9400*I*/9900*I* DAY CAB MODELS WITHOUT DETROIT DIESEL ENGINES BEFORE DECEMBER 2001

Refer to Figure 105 for Items in parentheses.

The cab air ride system for 9200*i*, 9400*i* and 9900*i* day cab models without Detroit Diesel engines before December 2001 contains two air springs (bags) (Item 1), two shock absorbers (Items 2 and 3), and is controlled by the cab air ride valve assembly (Item 4). The air ride components are not interchangeable with different cab models.

The following components - nylon air lines (to air spring) (Item 5), elbow fittings (Item 6 and 7), tee fitting (Item 8), air springs (bags) (Item 1), cab air ride valve assembly (Item 4), shock absorbers (Items 2 and 3) and track bar rod (Item 9) - should be checked at the time the truck is being serviced. Immediate corrective action should be taken if a malfunction occurs.

NOTE – The height control valve (Item 4), air springs (bags) (Item 1) and shock absorbers (Items 2 and 3) are serviceable and can be replaced individually.

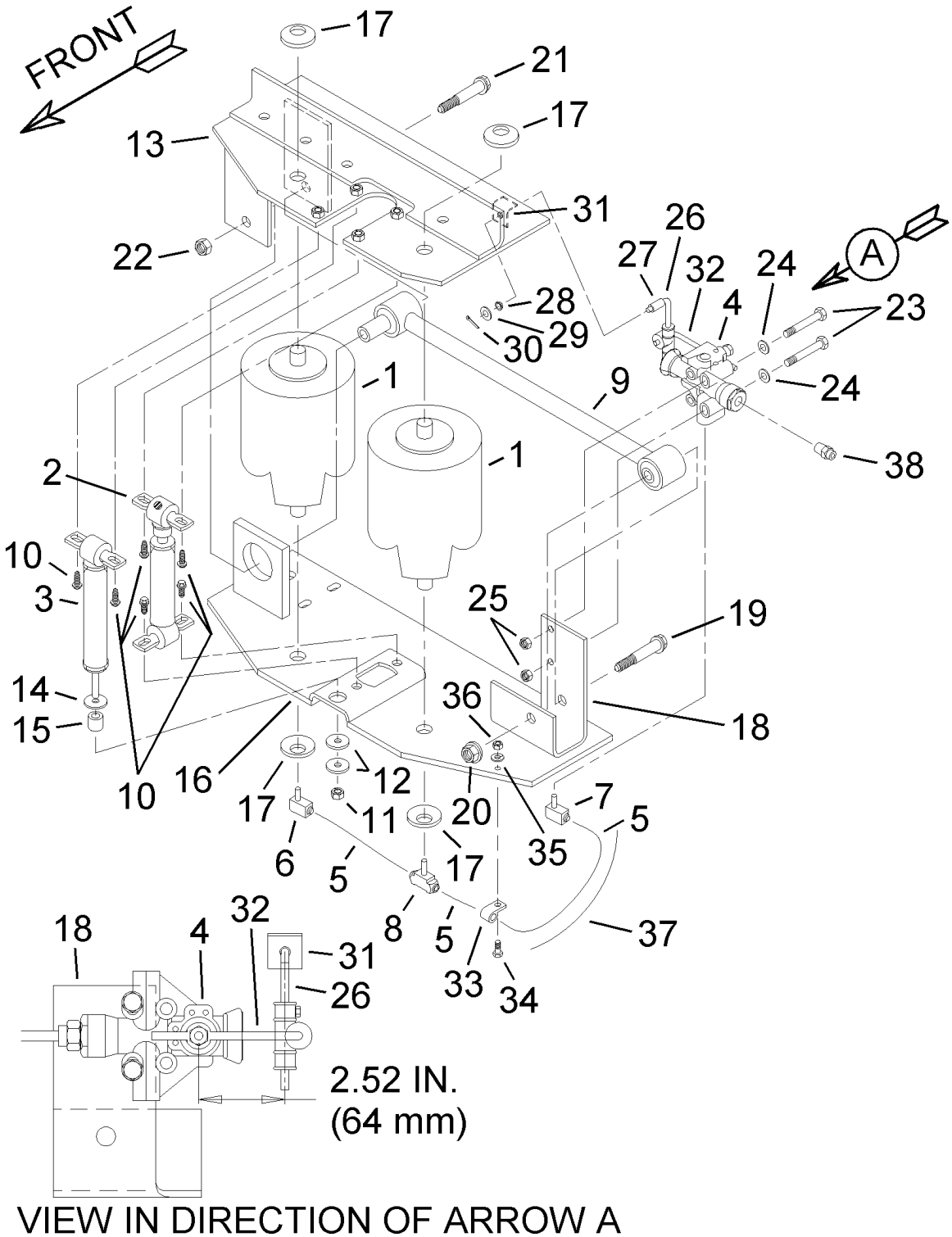

VIEW IN DIRECTION OF ARROW A

Figure 105 Cab Air Ride System for 9200*i*, 9400*i* and 9900*i* Day Cab Models without Detroit Diesel Engines before December 2001

1. AIR SPRING (BAG)
2. SHOCK ABSORBER
3. SHOCK ABSORBER
4. CAB AIR RIDE VALVE ASSEMBLY
5. NYLON AIR LINES (TO AIR SPRING)
6. PUSH TO CONNECT ELBOW FITTING
7. PUSH TO CONNECT ELBOW FITTING
8. PUSH TO CONNECT TEE FITTING
9. TRACK BAR ROD
10. HEX HEAD SCREW SEMS ASSEMBLY, 5/16–18 UNC–2A X 1
11. HEX FLANGED LOCK NUT
12. FLAT WASHER
13. AIR SUSPENSION UPPER MOUNTING PLATE
14. FLAT WASHER
15. SPACER
16. AIR SUSPENSION LOWER MOUNTING PLATE
17. PUSH-ON RING, 3/4 INCH
18. TRACK BAR MOUNT BRACKET
19. HEX FLANGED HEAD BOLT, 1/2–20 UNRF–2A X 3
20. HEX FLANGED LOCK NUT, 1/2–20 UNRF–2A
21. HEX FLANGED HEAD BOLT, 1/2–13 UNC X 5
22. HEX LOCK NUT, 1/2–13 UNC
23. HEX HEAD BOLT, 5/16–18 UNC X 2 1/2
24. FLAT WASHER
25. HEX LOCK NUT, 5/16–18 UNC
26. VERTICAL ADJUSTER ROD
27. NYLON TUBE
28. NYLINER BUSHING
29. FLAT WASHER
30. COTTER PIN
31. BRACKET
32. HORIZONTAL ADJUSTER ROD
33. RUBBER CUSHIONED LOOP CLAMP
34. HEX HEAD BOLT, 1/4–20 UNC X 3/4
35. LOCK WASHER
36. HEX NUT, 1/4–20 UNC
37. CONVOL CONDUIT
38. CONNECTOR (PUSH-TO-CONNECT) (AIR SUPPLY)

Periodically check tightness of all fasteners and air line fitting connections. Refer to the **TORQUE CHART** for (Figure 105) (See Figure 105, page 145) for proper tightening of all fasteners and air line fitting connections.

Remove Cab Air Ride Shock Absorber

Refer to Figure 105 (See Figure 105, page 145) for Items in parentheses.

1. Remove shock absorber (Item 3) as follows.
   a. Remove two hex head screw sems assemblies (Item 10) at the top of shock absorber (Item 3).
   b. Remove hex flanged lock nut (Item 11) and two flat washers (Item 12) at the bottom of the shock absorber (Item 3).

c. Pull top of shock absorber (Item 3) out from under air suspension upper mounting plate (Item 13) and lift bottom shaft of shock absorber with flat washer (Item 14) and spacer (Item 15) out of shock absorber mounting hole in air suspension lower mounting plate (Item 16).

2. Remove shock absorber (Item 2) as follows.
   a. Remove two hex head screw sems assemblies (Item 10) at the top of shock absorber (Item 2).
   b. Remove two hex head screw sems assemblies (Item 10) at the bottom of shock absorber (Item 2).
   c. Pull shock absorber (Item 2) from between air suspension upper mounting plate (Item 13) and air suspension lower mounting plate (Item 16).

Remove Cab Air Ride Air Springs (Bags)

1. Drain air from air system.

> **WARNING – To avoid personal injury, whenever any component is serviced or removed from the air system, be sure air system is drained and be sure to set parking brake and/or block vehicle wheels to prevent it from moving while service is being performed.**

2. Unlatch hood on both sides and open hood to full tilt position.

> **CAUTION – If the cab has to be jacked up (lifted) for service of air ride components, it is recommended that the hood assembly be tilted to the fully open position and is supported on an appropriate floor stand. This will eliminate any possible damage to the hood.**

Refer to Figure 105 (See Figure 105, page 145) for Items in parentheses unless otherwise noted.

3. Press and hold release button against fitting body and pull push to connect elbow fitting (Item 6) and nylon air line (to air spring) (Item 5) from the bottom of passenger side air spring (bag) (Item 1).

4. Press and hold release button against fitting body and pull push to connect tee fitting (Item 8) and nylon air lines (to air spring) (Item 5) from the bottom of driver side air spring (bag) (Item 1).

5. Remove push-on ring (Item 17) at the top stud of both air springs (bags) (Item 1).

6. Carefully raise cab for enough clearance to remove air springs (bags) (Item 1) as follows.

7. Use a suitable jack placed on frame rail flange and back of cab floor frame (Figure 106).

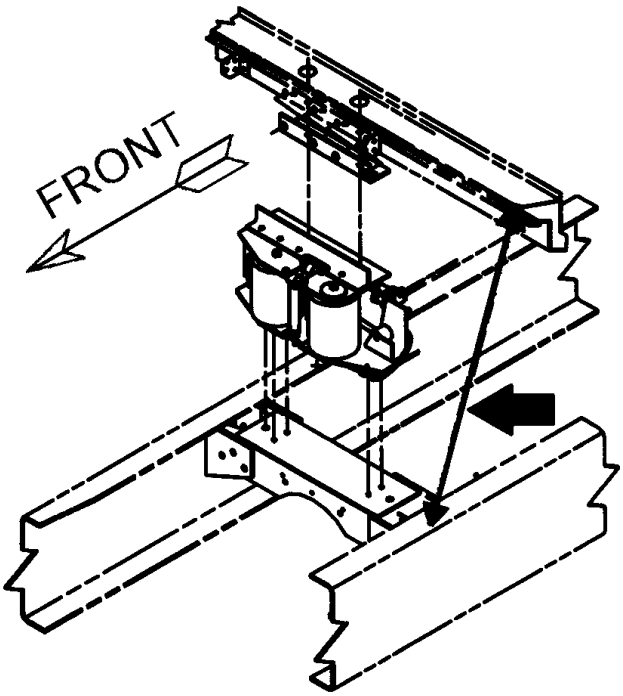

Figure 106 Place Jack on Frame Rail Flange and Back of Cab Floor Frame

8. Once the jack is positioned properly, carefully raise cab for enough clearance to remove top stud of air springs (bags) (Item 1) from air suspension upper mounting plate (Item 13).

> **CAUTION – Over-raising of cab may cause component damage.**

9. Once the cab has been raised, remove push-on ring (Item 17) at the bottom stud of both air springs (bags) (Item 1).

10. Remove air springs (bags) (Item 1) from between air suspension upper mounting plate (Item 13) and air suspension lower mounting plate (Item 16).

Remove Track Bar Rod

Refer to Figure 105 (See Figure 105, page 145) for Items in parentheses.

1. Remove track bar rod (Item 9) as follows.
   a. Remove hex flanged head bolt (Item 19) and hex flanged lock nut (Item 20) from track bar mount bracket (Item 18) and track bar rod (Item 9).
   b. Remove hex flanged head bolt (Item 21) and hex lock nut (Item 22) from track bar mount of air suspension upper mounting plate (Item 13) and track bar rod (Item 9) and remove track bar rod.

Remove Cab Air Ride Valve

1. Drain air from air system.

WARNING – To avoid personal injury, whenever any component is serviced or removed from air system, be sure to set parking brake and/or block vehicle wheels to prevent it from moving while service is being performed.

Refer to Figure 107 for Items in parentheses.

2. Press and hold release button against fitting body and pull air line (supply) (Item 1) from push to connect elbow fitting (Item 8) of cab air ride valve (Item 2).

3. Press and hold release button against fitting body and pull push to connect elbow fitting (Item 8) from bottom of cab air ride valve (Item 2).

4. Remove cotter pin (Item 3) and flat washer (Item 4) from vertical adjuster rod (Item 5) and remove vertical adjuster rod from nyliner bushing (Item 6) and bracket (Item 7).

5. Remove two hex head bolts, flat washers and hex lock nuts (Items 10, 11 and 12) and remove cab air ride valve (Item 2) from track bar mount bracket (Item 9). Save cab air ride valve, unless being replaced, and hex head bolts, flat washers and hex lock nuts for installation.

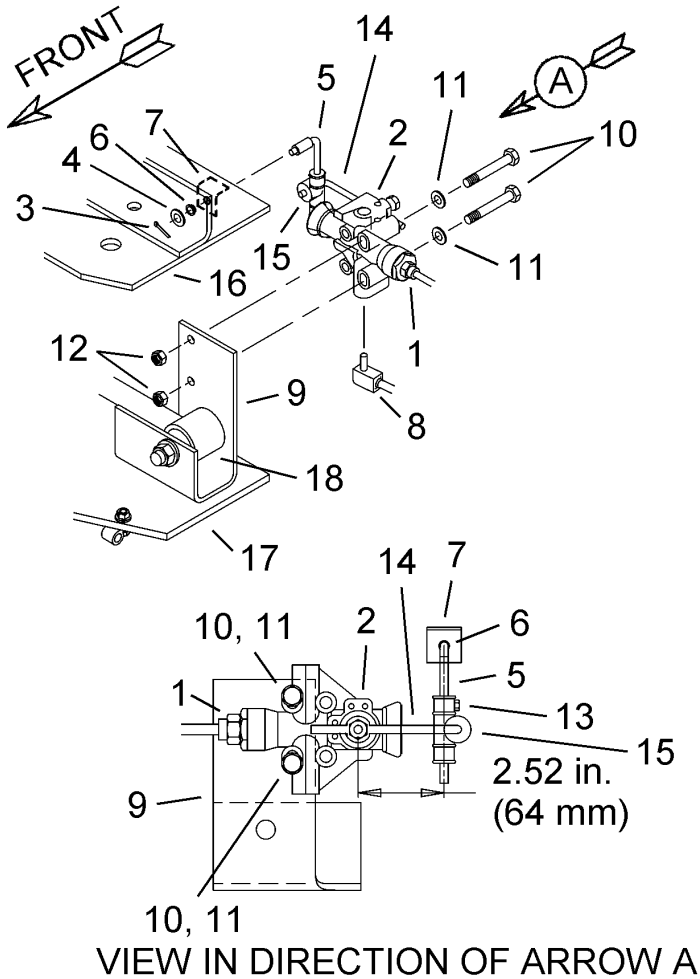

Figure 107 Cab Air Ride Valve on Cab Air Ride System for 9200*i*, 9400*i* and 9900*i* Day Cab Models without Detroit Diesel Engines before December 2001

1. AIR LINE (SUPPLY)
2. CAB AIR RIDE VALVE
3. COTTER PIN
4. FLAT WASHER
5. VERTICAL ADJUSTER ROD
6. NYLINER BUSHING
7. BRACKET
8. PUSH TO CONNECT ELBOW FITTING
9. TRACK BAR MOUNT BRACKET
10. HEX HEAD BOLT, 5/16–18 UNC X 2 1/2
11. FLAT WASHER
12. HEX LOCK NUT, 5/16–18 UNC
13. VERTICAL ADJUSTER ROD LOCK BOLT
14. HORIZONTAL ADJUSTER ROD
15. HORIZONTAL ADJUSTER ROD LOCK
16. AIR SUSPENSION UPPER MOUNTING PLATE
17. AIR SUSPENSION LOWER MOUNTING PLATE
18. TRACK BAR ROD

4.39. CAB AIR SUSPENSION SYSTEM FOR 9200*i*/9400*i*/9900*i* DAY CAB MODELS WITHOUT DETROIT DIESEL ENGINES AFTER DECEMBER 2001

WARNING – For safety purposes cab air suspension must be supplied from a pressure protected air supply.

Refer to Figure 108 (See Figure 108, page 152) for Items in parentheses.

The cab air suspension system for the 9200*i*, 9400*i* and 9900*i* day cab models without Detroit Diesel engines after December 2001 contains one air spring (bag) (Item 5), two shock absorbers (Items 6 and 7), and is controlled by the height control valve (Item 8). The air suspension assembly (Figure 108) (See Figure 108, page 152) needs no lubrication and very little maintenance.

The following components - air line (to air spring) (Item 14), hex nipple fitting (Item 12) and elbow fittings (Items 13 and 26), air spring (bag) (Item 5), height control valve (Item 8), shock absorbers (Items 6 and 7) and lateral control rod (Item 4) - should be checked at the time the truck is being serviced. Immediate corrective action should be taken if a malfunction occurs.

NOTE – The height control valve (Item 8), air spring (bag) (Item 5) and shock absorbers (Items 6 and 7) are serviceable and can be replaced individually.

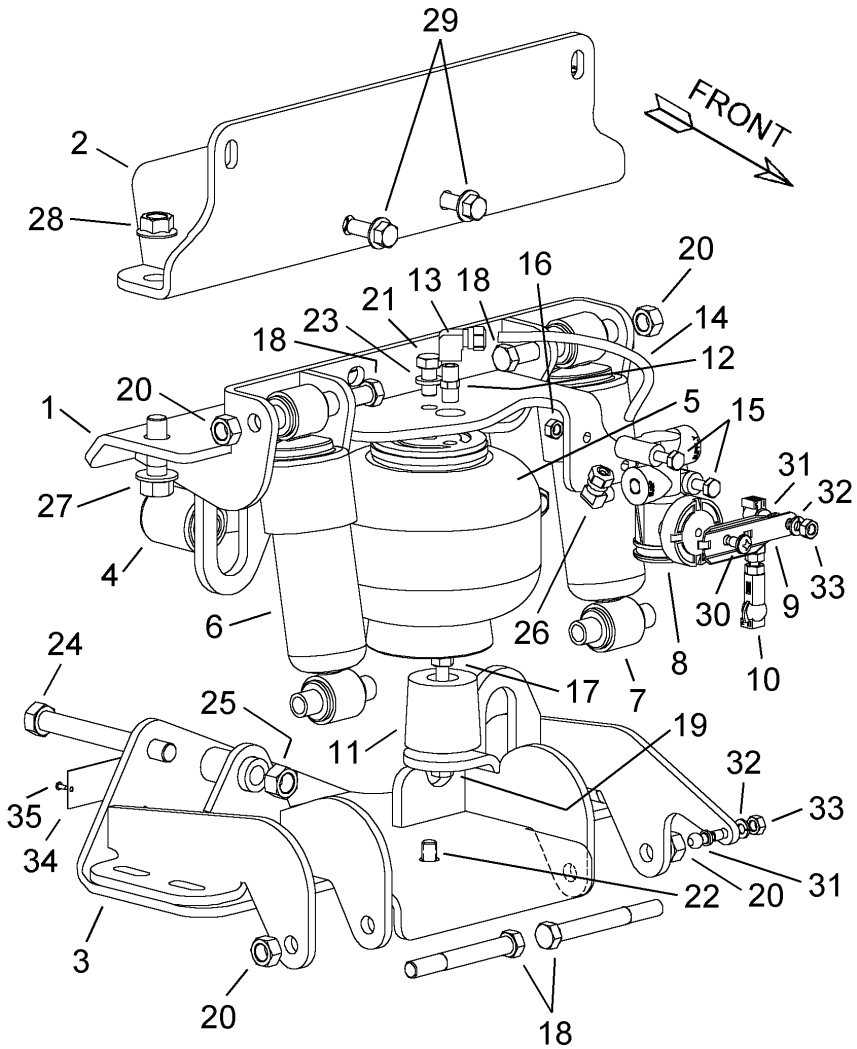

Figure 108 Cab Air Suspension System for 9200*i*/9400*i*/9900*i* Day Cab Models without Detroit Diesel Engines after December 2001

1. CAB MOUNTING PLATE
2. CAB SPACER BRACKET (USED ON DAY CABS WITH STANDARD 7 PIECE CROSSMEMBER)
3. CROSSMEMBER MOUNTING PLATE
4. LATERAL CONTROL ROD
5. AIR SPRING (BAG)
6. SHOCK ABSORBER
7. SHOCK ABSORBER
8. HEIGHT CONTROL VALVE
9. HEIGHT CONTROL VALVE ARM
10. HEIGHT CONTROL VALVE LINKAGE
11. RUBBER BUMPER
12. HEX NIPPLE FITTING, 1/4 TB
13. ELBOW FITTING, 1/4 TB 1/8 F-NPT
14. AIR LINE (TO AIR SPRING)
15. HEX HEAD BOLT, 1/4 UNC X 1 3/4
16. HEX LOCK NUT, 1/4 UNC
17. HEX HEAD BOLT, 5/16 UNC X 1 1/2
18. HEX HEAD BOLT, 7/16 UNF X 3 1/2
19. HEX LOCK NUT, 5/16 UNC
20. HEX LOCK NUT, 7/16 UNF
21. HEX HEAD BOLT, 3/8 UNC X 3/4
22. SOCKET COUNTERSUNK FLAT HEAD SCREW, 3/8 UNC X 7/8
23. LOCK WASHER, 3/8
24. HEX HEAD BOLT, 1/2 UNF X 4 1/2
25. HEX LOCK NUT, 1/2 UNF
26. ELBOW FITTING, 1/4 TB 1/8 M-NPT
27. HEX FLANGED HEAD BOLT, 1/2 UNC X 11/2
28. HEX FLANGED LOCK NUT, 1/2 UNC
29. HEX FLANGED HEAD BOLT, 3/8 UNC X 1
30. PAN HEAD BEARING SCREW, 1/4–15 X 1/2
31. THREADED BALL PIVOT
32. LOCK WASHER, 1/4
33. HEX NUT, 1/4 UNC
34. IDENTIFICATION PLATE
35. PAN HEAD SCREW, NO. 4 X 1/4

Periodically check tightness of all fasteners and air line fitting connections. Refer to the **TORQUE CHART** for (Figure 108) (See Figure 108, page 152) for proper tightening of all fasteners and air line fitting connections.

Remove Height Control Valve

NOTE – If there is an attempt to disassemble or adjust fittings on the height control valve (Item 8, Figure 108) (See Figure 108, page 152), it will void the warranty. Contact the air suspension manufacturer for assistance.

1. Drain air from air system.

WARNING – To avoid personal injury, whenever any component is serviced or removed from air system, be sure to set parking brake and/or block vehicle wheels to prevent it from moving while service is being performed.

Refer to Figure 109 for Items in parentheses.

2. Loosen compression nut (Item 1) and pull air line (supply) (Item 2) from elbow fitting (Item 13) in “SUPPLY” port of height control valve (Item 5).

3. Loosen compression nut (Item 3) and pull air line (to air spring) (Item 4) from elbow fitting (Item 14) in “SUSP” port of height control valve (Item 5).

4. Remove height control valve linkage (Item 6) from threaded ball pivot (Item 31, Figure 108) (See Figure 108, page 152) by unlatching linkage clip and carefully pry the height control valve linkage socket from threaded ball pivot on height control valve arm (Item 7).

5. Remove two hex head bolts (Item 8) and hex lock nuts (Item 16, Figure 108) (See Figure 108, page 152) and remove height control valve (Item 5) from mounting bracket of cab mounting plate (Item 9).

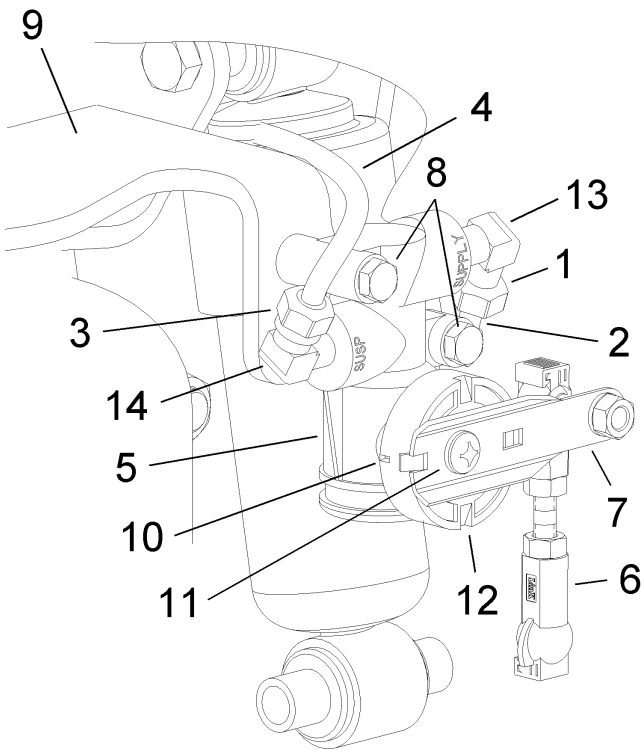

Figure 109 Cab Air Suspension Height Control Valve

1. COMPRESSION NUT (TIGHTEN HAND TIGHT + ONE TURN)
2. AIR LINE (SUPPLY)
3. COMPRESSION NUT (TIGHTEN HAND TIGHT + ONE TURN)
4. AIR LINE (TO AIR SPRING)
5. HEIGHT CONTROL VALVE
6. HEIGHT CONTROL VALVE LINKAGE
7. HEIGHT CONTROL VALVE ARM
8. HEX HEAD BOLT, 1/4 UNC X 1 3/4 AND HEX LOCK NUT, 1/4 UNC
9. CAB MOUNTING PLATE
10. DRIVE BEARING NOTCH FOR VALVE ORIENTATION
11. PAN HEAD BEARING SCREW
12. DRIVE BEARING
13. ELBOW FITTING, 1/4 TB 1/8 M-NPT
14. ELBOW FITTING, 1/4 TB 1/8 M-NPT

Remove Cab Air Suspension Shock Absorber

Refer to Figure 108 (See Figure 108, page 152) for Items in parentheses.

1. Remove shock absorber (Item 6) as follows.
   a. Remove hex head bolts and hex lock nuts (Items 18 and 20) at the top and bottom of shock absorber (Item 6).
   b. Remove shock absorber (Item 6) from between cab mounting plate (Item 1) and crossmember mounting plate (Item 3).

2. Remove shock absorber (Item 7) as follows.
   a. Remove hex head bolts and hex lock nuts (Items 18 and 20) at the top and bottom of shock absorber (Item 7).
   b. Remove shock absorber (Item 7) from between cab mounting plate (Item 1) and crossmember mounting plate (Item 3).

Remove Cab Air Suspension Air Spring (Bag)

1. Drain air from air system.

> **WARNING – To avoid personal injury, whenever any component is serviced or removed from air system, be sure air system is drained and be sure to set parking brake and/or block vehicle wheels to prevent it from moving while service is being performed.**

Refer to Figure 108 (See Figure 108, page 152) for Items in parentheses.

2. Loosen compression nut of elbow fitting (Item 13) and pull air line (to air spring) (Item 14) from elbow fitting at the top of air spring (bag) (Item 5).
3. Remove elbow fitting (Item 13) from hex nipple fitting (Item 12) at top of air spring (bag) (Item 5).
4. Remove hex nipple fitting (Item 12) from top of air spring (bag) (Item 5).
5. Remove hex head bolt (Item 21) and lock washer (Item 23) at the top of air spring (bag) (Item 5) at cab mounting plate (Item 1).
6. Remove socket countersunk flat head screw (Item 22) at the bottom of air spring (bag) under crossmember mounting plate (Item 3).
7. Slide air spring (bag) (Item 5) from between cab mounting plate (Item 1) and crossmember mounting plate (Item 3).

Remove Lateral Control Rod

Refer to Figure 108 (See Figure 108, page 152) for Items in parentheses.

1. Remove lateral control rod (Item 4) as follows.
   a. Remove hex head bolt (Item 24) and hex lock nut (Item 25) from mounting bracket of crossmember mounting plate (Item 3) and lateral control rod (Item 4).
   b. Remove hex head bolt (Item 24) and hex lock nut (Item 25), not visible in (Figure 108) (See Figure 108, page 152) from cab mounting plate (Item 1) and lateral control rod (Item 4) and remove lateral control rod.

4.40. CAB AIR SUSPENSION SYSTEM FOR 9200*i* DAY CAB MODELS WITH DETROIT DIESEL ENGINES BEFORE JANUARY 1997

WARNING – For safety purposes cab air suspension must be supplied from a pressure protected air supply.

Refer to Figure 110 (See Figure 110, page 158) for Items in parentheses.

The cab air suspension system for the 9200*i* day cab models with Detroit Diesel engines before January 1997 contains one air spring (bag) (Item 7), two shock absorbers (Items 8 and 9), and is controlled by the height control valve (Item 10). The air suspension assembly (Figure 110) (See Figure 110, page 158) needs no lubrication and very little maintenance

The following components - air line (to air spring) (Item 16), hex nipple fitting (Item 14), elbow fitting (Item 15), air spring (bag) (Item 7), height control valve (Item 10), shock absorbers (Items 8 and 9) and lateral control rod (Item 6) - should be checked at the time the truck is being serviced. Immediate corrective action should be taken if a malfunction occurs.

NOTE – The height control valve (Item 10), air spring (bag) (Item 7) and shock absorbers (Items 8 and 9) are serviceable and can be replaced individually.

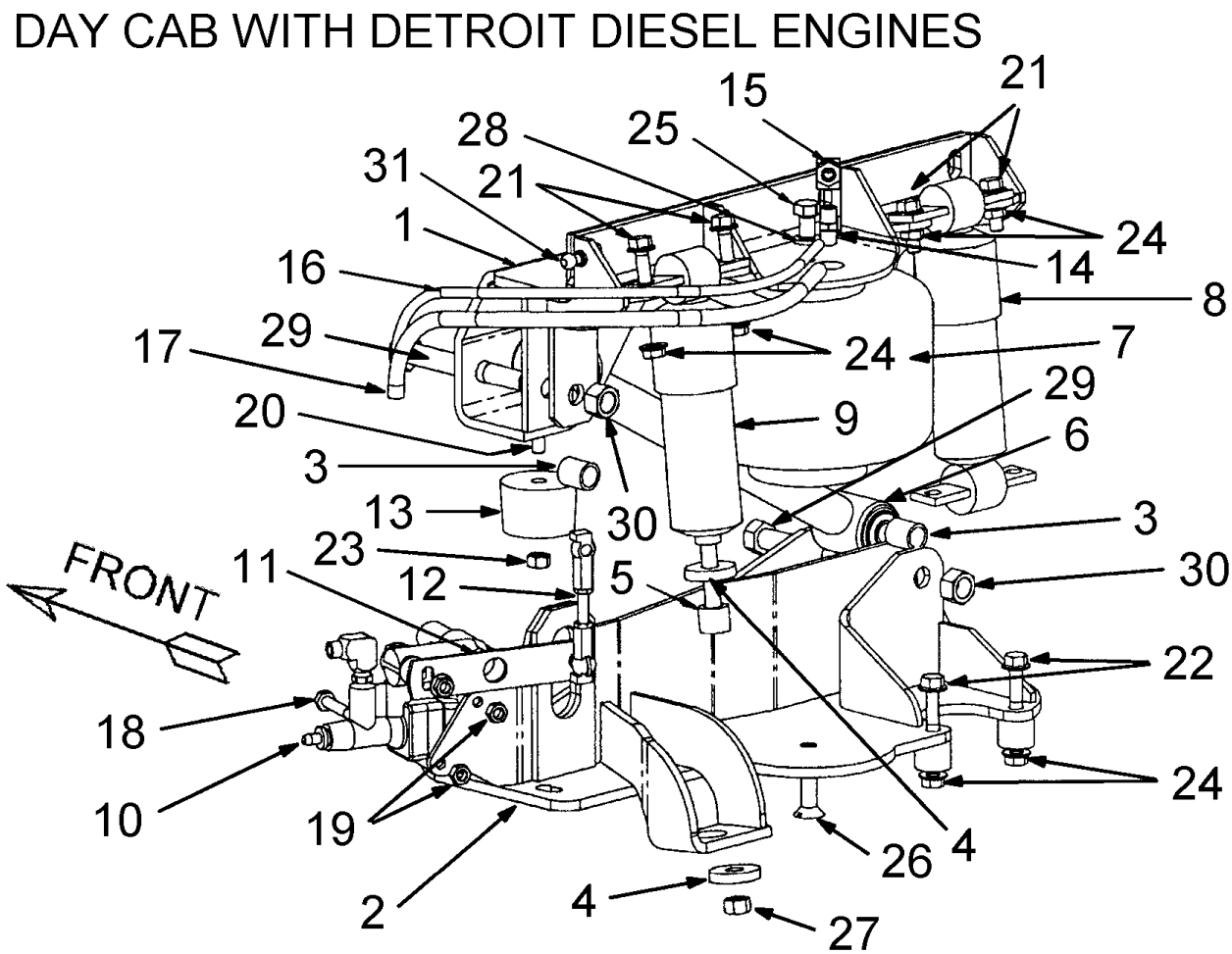

Figure 110 Cab Air Suspension System for 9200*i* Day Cab Models with Detroit Diesel Engines before January 1997 and Cab Air Suspension System for 9100*i* and 9200*i* Day Cab Models after January 1997

1. CAB MOUNTING PLATE
2. CROSSMEMBER MOUNTING PLATE
3. SPACER LIMITER
4. SHOCK WASHER
5. SHOCK SPACER LIMITER
6. LATERAL CONTROL ROD
7. AIR SPRING (BAG)
8. SHOCK ABSORBER
9. SHOCK ABSORBER
10. HEIGHT CONTROL VALVE
11. HEIGHT CONTROL VALVE ARM
12. HEIGHT CONTROL VALVE LINKAGE
13. RUBBER BUMPER
14. HEX NIPPLE FITTING, 1/4 TB
15. ELBOW FITTING, 1/8–NPT
16. AIR LINE (TO AIR SPRING), 1.3 FT.
17. CORRUGATED LOOM, 1.3 FT.
18. HEX HEAD BOLT, 1/4 UNC X 2
19. HEX LOCK NUT, 1/4 UNC
20. HEX HEAD BOLT, 5/16–18 UNC X 1
21. HEX FLANGED HEAD BOLT, 5/16–18 UNC X 1
22. HEX FLANGED HEAD BOLT, 5/16–18 UNC X 1–3/4
23. HEX LOCK NUT, 5/16 UNC
24. HEX FLANGED LOCK NUT, 5/16 UNC
25. HEX HEAD BOLT, 3/8 UNC X 5/8
26. MACH. SCREW (CS), 3/8 UNC
27. HEX LOCK NUT, 3/8 UNF
28. LOCK WASHER, 3/8
29. HEX HEAD BOLT, 1/2 UNF X 4
30. HEX LOCK NUT, 1/2 UNF
31. THREADED BALL PIVOT AND HEX NUT

Periodically check tightness of all fasteners and air line fitting connections. Refer to the **TORQUE CHART** for (Figure 110) (See Figure 110, page 158) for proper tightening of all fasteners and air line fitting connections.

Remove Height Control Valve

NOTE – If there is an attempt to disassemble or adjust fittings on the height control valve (Item 10, Figure 110) (See Figure 110, page 158), it will void the warranty. Contact the air suspension manufacturer for assistance.

1. Drain air from air system.

WARNING – To avoid personal injury, whenever any component is serviced or removed from air system, be sure to set parking brake and/or block vehicle wheels to prevent it from moving while service is being performed.

Refer to Figure 111 for Items in parentheses.

2. Press and hold release button against fitting body and pull push to connect connector (Item 7) and air line (supply) (Item 1) from elbow fitting in “SUPPLY” port of height control valve (Item 3).

3. Loosen compression nut (Item 8) and pull air line (to air spring) (Item 2) from elbow fitting in “SUSP” port of height control valve (Item 3).

4. Remove height control valve linkage (Item 4) from threaded ball pivot by unlatching linkage clip and carefully pry the height control valve linkage socket from threaded ball pivot on height control valve arm (Item 5).

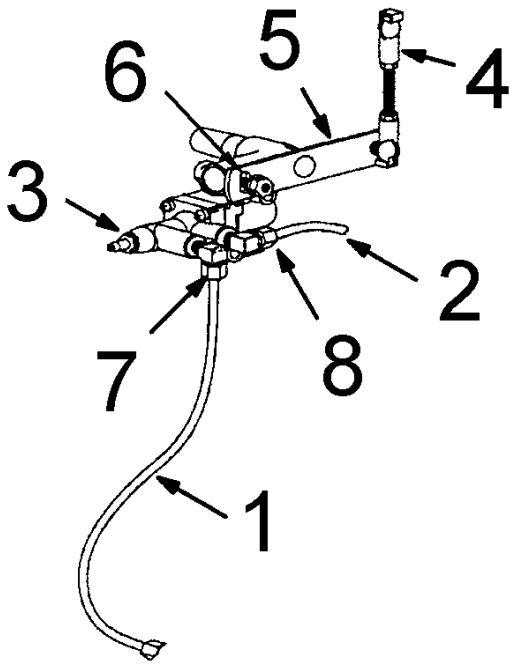

Figure 111 Cab Air Suspension Height Control Valve

1. AIR LINE (SUPPLY)
2. AIR LINE (TO AIR SPRING)
3. HEIGHT CONTROL VALVE
4. HEIGHT CONTROL VALVE LINKAGE
5. HEIGHT CONTROL VALVE ARM
6. SLOT FOR COARSE ADJUSTMENT
7. PUSH TO CONNECT CONNECTOR
8. COMPRESSION NUT (TIGHTEN HAND TIGHT + ONE TURN)

Refer to Figure 110 (See Figure 110, page 158) for Items in parentheses.

5. Remove two hex head bolts and hex lock nuts (Items 18 and 19) and remove height control valve (Item 10) from mounting bracket of crossmember mounting plate (Item 2).

Remove Cab Air Suspension Shock Absorber

Refer to Figure 110 (See Figure 110, page 158) for Items in parentheses.

1. Remove shock absorber (Item 8) as follows.

a. Remove two hex flanged head bolts and hex flanged lock nuts (Items 21 and 24) at the top of shock absorber (Item 8).

b. Remove two hex flanged head bolts and hex flanged lock nuts (Items 22 and 24) at the bottom of shock absorber (Item 8).

c. Remove shock absorber (Item 8) from between cab mounting plate (Item 1) and crossmember mounting plate (Item 2).

2. Remove shock absorber (Item 9) as follows.

a. Remove two hex flanged head bolts and hex flanged lock nuts (Items 21 and 24) at the top of shock absorber (Item 9).

b. Remove hex lock nut (Item 27) and shock washer (Item 4) at the bottom of shock absorber (Item 9).

c. Remove shock absorber (Item 9) with shock washers (Item 4) and shock spacer limiter (Item 5) from shock mounting bracket of crossmember mounting plate (Item 2).

Remove Cab Air Suspension Air Spring (Bag)

1. Drain air from air system.

> **WARNING – To avoid personal injury, whenever any component is serviced or removed from air system, be sure air system is drained and be sure to set parking brake and/or block vehicle wheels to prevent it from moving while service is being performed.**

Refer to Figure 110 (See Figure 110, page 158) for Items in parentheses.

2. Loosen compression nut of elbow fitting (Item 15) and pull air line (to air spring) (Item 16) from elbow fitting at top of air spring (bag) (Item 7).

3. Remove elbow fitting (Item 15) from hex nipple fitting (Item 14) at top of air spring (bag) (Item 7).

4. Remove hex nipple fitting (Item 14) from top of air spring (bag) (Item 7).

5. Remove hex head bolt (Item 25) from the top of air spring (bag) (Item 7) at cab mounting plate (Item 1).

6. Remove machine screw (Item 26) from the bottom of air spring (bag) (Item 7) under crossmember mounting plate (Item 2).

7. Slide air spring (bag) (Item 7) from between cab mounting plate (Item 1) and crossmember mounting plate (Item 2).

Remove Lateral Control Rod

Refer to Figure 110 (See Figure 110, page 158) for Items in parentheses.

1. Remove lateral control rod (Item 6) as follows.

a. Remove hex head bolt (Item 29) and hex lock nut (Item 30) from mounting bracket of crossmember mounting plate (Item 2) and lateral control rod (Item 6).

b. Remove hex head bolt (Item 29) and hex lock nut (Item 30) from cab mounting plate (Item 1) and lateral control rod (Item 6) and remove lateral control rod.

4.41. CAB AIR SUSPENSION SYSTEM FOR 9100*I* AND 9200*I* DAY CAB MODELS AFTER JANUARY 1997

WARNING – For safety purposes cab air suspension must be supplied from a pressure protected air supply.

Refer to Figure 110 (See Figure 110, page 158) for Items in parentheses.

The cab air suspension system for the 9100*i* and 9200*i* day cab models after January 1997 contains one air spring (bag) (Item 7), two shock absorbers (Items 8 and 9), and is controlled by the height control valve (Item 10). The air suspension assembly (Figure 110) (See Figure 110, page 158) needs no lubrication and very little maintenance

The following components - air line (to air spring) (Item 16), hex nipple fitting (Item 14), elbow fitting (Item 15), air spring (bag) (Item 7), height control valve (Item 10), shock absorbers (Items 8 and 9) and lateral control rod (Item 6) - should be checked at the time the truck is being serviced. Immediate corrective action should be taken if a malfunction occurs.

NOTE – The height control valve (Item 10), air spring (bag) (Item 7) and shock absorbers (Items 8 and 9) are serviceable and can be replaced individually.

Periodically check tightness of all fasteners and air line fitting connections. Refer to the **TORQUE CHART** for (Figure 110) (See Figure 110, page 158) for proper tightening of all fasteners and air line fitting connections.

Remove Height Control Valve

NOTE – If there is an attempt to disassemble or adjust fittings on the height control valve (Item 10, Figure 110) (See Figure 110, page 158), it will void the warranty. Contact the air suspension manufacturer for assistance.

1. Drain air from air system.

WARNING – To avoid personal injury, whenever any component is serviced or removed from air system, be sure to set parking brake and/or block vehicle wheels to prevent it from moving while service is being performed.

Refer to Figure 111(See Figure 111, page 160) for Items in parentheses.

2. Press and hold release button against fitting body and pull push to connect connector (Item 7) and air line (supply) (Item 1) from elbow fitting in “SUPPLY” port of height control valve (Item 3).

3. Loosen compression nut (Item 8) and pull air line (to air spring) (Item 2) from elbow fitting in “SUSP” port of height control valve (Item 3).

4. Remove height control valve linkage (Item 4) from threaded ball pivot by unlatching linkage clip and carefully pry the height control valve linkage socket from threaded ball pivot on height control valve arm (Item 5).

Refer to Figure 110 (See Figure 110, page 158) for Items in parentheses.

5. Remove two hex head bolts and hex lock nuts (Items 18 and 19) and remove height control valve (Item 10) from mounting bracket of crossmember mounting plate (Item 2).

Remove Cab Air Suspension Shock Absorber

Refer to Figure 110 (See Figure 110, page 158) for Items in parentheses.

1. Remove shock absorber (Item 8) as follows.
   a. Remove two hex flanged head bolts and hex flanged lock nuts (Items 21 and 24) at the top of shock absorber (Item 8).
   b. Remove two hex flanged head bolts and hex flanged lock nuts (Items 22 and 24) at the bottom of shock absorber (Item 8).
   c. Remove shock absorber (Item 8) from between cab mounting plate (Item 1) and crossmember mounting plate (Item 2).
2. Remove shock absorber (Item 9) as follows.
   a. Remove two hex flanged head bolts and hex flanged lock nuts (Items 21 and 24) at the top of shock absorber (Item 9).
   b. Remove hex lock nut (Item 27) and shock washer (Item 4) at the bottom of shock absorber (Item 9).
   c. Remove shock absorber (Item 9) with shock washers (Item 4) and shock spacer limiter (Item 5) from shock mounting bracket of crossmember mounting plate (Item 2).

Remove Cab Air Suspension Air Spring (Bag)

1. Drain air from air system.

> **WARNING – To avoid personal injury, whenever any component is serviced or removed from air system, be sure air system is drained and be sure to set parking brake and/or block vehicle wheels to prevent it from moving while service is being performed.**

Refer to Figure 110 (See Figure 110, page 158) for Items in parentheses.

2. Loosen compression nut of elbow fitting (Item 15) and pull air line (to air spring) (Item 16) from elbow fitting at top of air spring (bag) (Item 7).
3. Remove elbow fitting (Item 15) from hex nipple fitting (Item 14) at top of air spring (bag) (Item 7).
4. Remove hex nipple fitting (Item 14) from top of air spring (bag) (Item 7).
5. Remove hex head bolt (Item 25) from the top of air spring (bag) (Item 7) at cab mounting plate (Item 1).

6. Remove machine screw (Item 26) from the bottom of air spring (bag) (Item 7) under crossmember mounting plate (Item 2).

7. Slide air spring (bag) (Item 7) from between cab mounting plate (Item 1) and crossmember mounting plate (Item 2).

Remove Lateral Control Rod

Refer to Figure 110 (See Figure 110, page 158) for Items in parentheses.

1. Remove lateral control rod (Item 6) as follows.
   a. Remove hex head bolt (Item 29) and hex lock nut (Item 30) from mounting bracket of crossmember mounting plate (Item 2) and lateral control rod (Item 6).
   b. Remove hex head bolt (Item 29) and hex lock nut (Item 30) from cab mounting plate (Item 1) and lateral control rod (Item 6) and remove lateral control rod.

4.42. CAB AIR SUSPENSION SYSTEM FOR 9200*I* DAY CAB MODELS WITH DETROIT DIESEL ENGINES BEFORE MARCH 1997

WARNING – For safety purposes cab air suspension must be supplied from a pressure protected air supply.

Refer to Figure 112 (See Figure 112, page 165) for Items in parentheses.

The cab air suspension system for the 9200*i* day cab models with Detroit Diesel engines before March 1997 contains one air spring (bag) (Item 4), two shock absorbers (Items 5 and 6), and is controlled by the height control valve (Item 7). The air suspension assembly (Figure 112) (See Figure 112, page 165) needs no lubrication and very little maintenance

The following components - air line (to air spring) (Item 13), hex nipple fitting (Item 11), elbow fitting (Item 12), air spring (bag) (Item 4), height control valve (Item 7), shock absorbers (Items 5 and 6) and lateral control rod (Item 3) - should be checked at the time the truck is being serviced. Immediate corrective action should be taken if a malfunction occurs.

NOTE – The height control valve (Item 7), air spring (bag) (Item 4) and shock absorbers (Items 5 and 6) are serviceable and can be replaced individually.

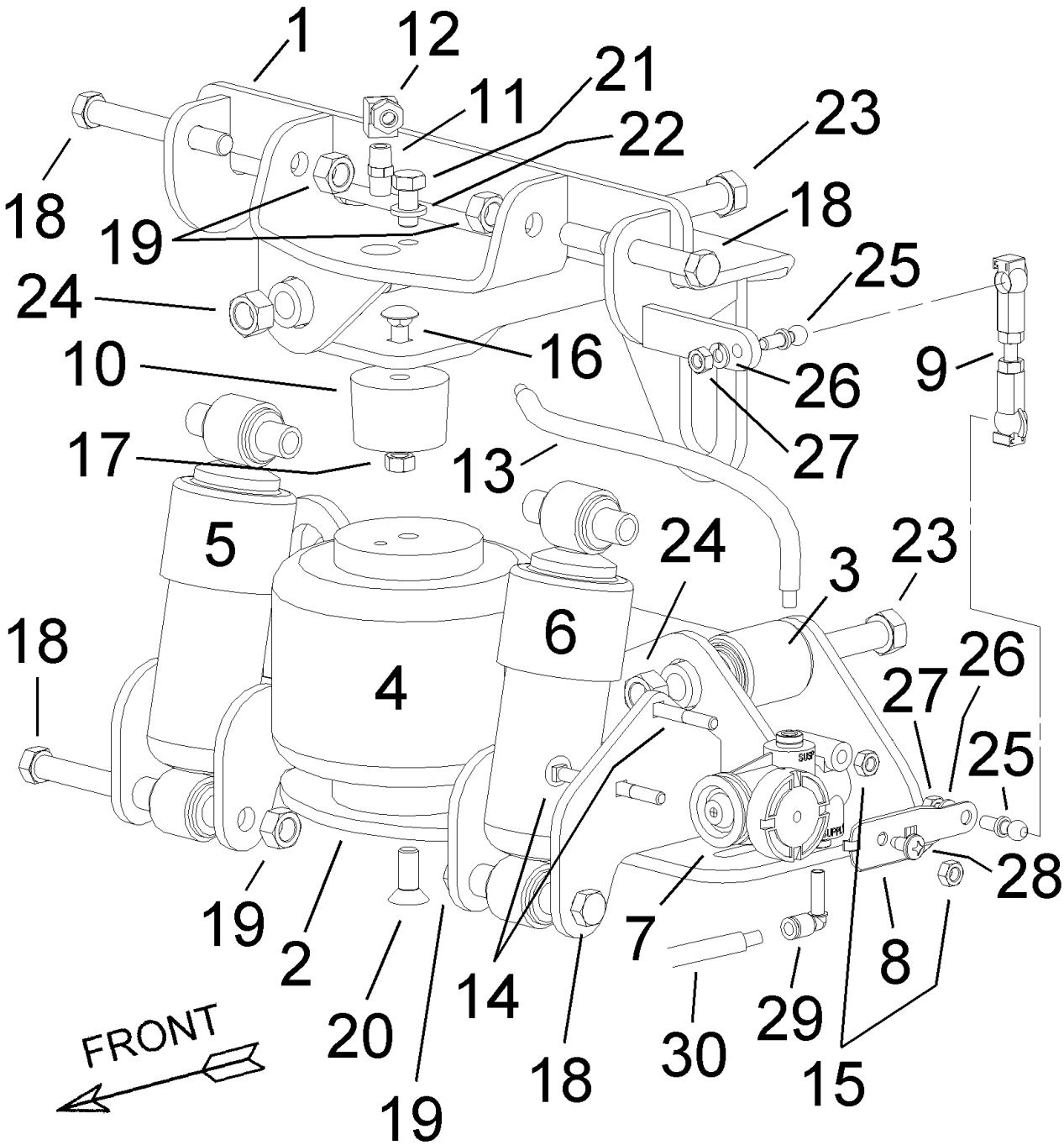

Figure 112 Cab Air Suspension System for 9200*i* Models with Detroit Diesel Engines and with Rear Cab Air Suspension System before March 1997 and Day Cab for 9100*i* and 9200*i* Models with Rear Cab Air Suspension System after March 1997

1. CAB MOUNTING PLATE
2. CROSSMEMBER MOUNTING PLATE
3. LATERAL CONTROL ROD
4. AIR SPRING (BAG)
5. SHOCK ABSORBER
6. SHOCK ABSORBER
7. HEIGHT CONTROL VALVE
8. HEIGHT CONTROL VALVE ARM
9. HEIGHT CONTROL VALVE LINKAGE
10. RUBBER BUMPER
11. HEX NIPPLE FITTING, 1/4 TB 1/8 M–NPT
12. ELBOW FITTING, 1/4 TB 1/8 F–NPT, DOT
13. AIR LINE (TO AIR SPRING), 9.63 IN. AND CORRUGATED LOOM, 8.63 IN.
14. CARRIAGE BOLT, 1/4 UNC X 1 3/4
15. HEX LOCK NUT, 1/4 UNC
16. CARRIAGE BOLT, 5/16–18 UNC X 1
17. HEX LOCK NUT, 5/16 UNC
18. HEX HEAD BOLT, 7/16–18 UNC X 3 1/2
19. HEX LOCK NUT, 7/16 UNC
20. MACH. SCREW (CS), 3/8 UNC X 1
21. HEX HEAD BOLT, 3/8 UNC X 3/4
22. LOCK WASHER, 3/8
23. HEX HEAD BOLT, 1/2 UNF X 4
24. HEX LOCK NUT, 1/2 UNF
25. THREADED BALL PIVOT
26. LOCK WASHER, 1/4
27. HEX NUT, 1/4 UNC
28. PAN HEAD BEARING SCREW, 1/4–15 X 1/2
29. PUSH TO CONNECT ELBOW FITTING, 1/4 TB 1/4 PTC DOT
30. AIR LINE (SUPPLY)

Periodically check tightness of all fasteners and air line fitting connections. Refer to the **TORQUE CHART** for (Figure 112) (See Figure 112, page 165) for proper tightening of all fasteners and air line fitting connections.

Remove Height Control Valve

NOTE – If there is an attempt to disassemble or adjust fittings on the height control valve (Item 7, Figure 112) (See Figure 112, page 165), it will void the warranty. Contact the air suspension manufacturer for assistance.

1. Drain air from air system.

WARNING – To avoid personal injury, whenever any component is serviced or removed from air system, be sure to set parking brake and/or block vehicle wheels to prevent it from moving while service is being performed.

Refer to Figure 113 for Items in parentheses.

2. Press and hold release button against fitting body and pull air line (supply) (Item 2) from push to connect elbow fitting (Item 1) in “SUPPLY” port of height control valve (Item 3).

3. Press and hold release button against fitting body and pull push to connect elbow fitting (Item 1) from “SUPPLY” port of height control valve (Item 3).

4. Press and hold release button against fitting body and pull air line (to air spring) (Item 4) from “SUSP” port of height control valve (Item 3).

5. Remove height control valve linkage (Item 5) from threaded ball pivot (Item 6) by unlatching linkage clip and carefully pry the height control valve linkage socket from threaded ball pivot on height control valve arm (Item 7).

6. Remove two carriage bolts and hex lock nuts (Items 8 and 9) and remove height control valve (Item 3) from mounting bracket of crossmember mounting plate (Item 10).

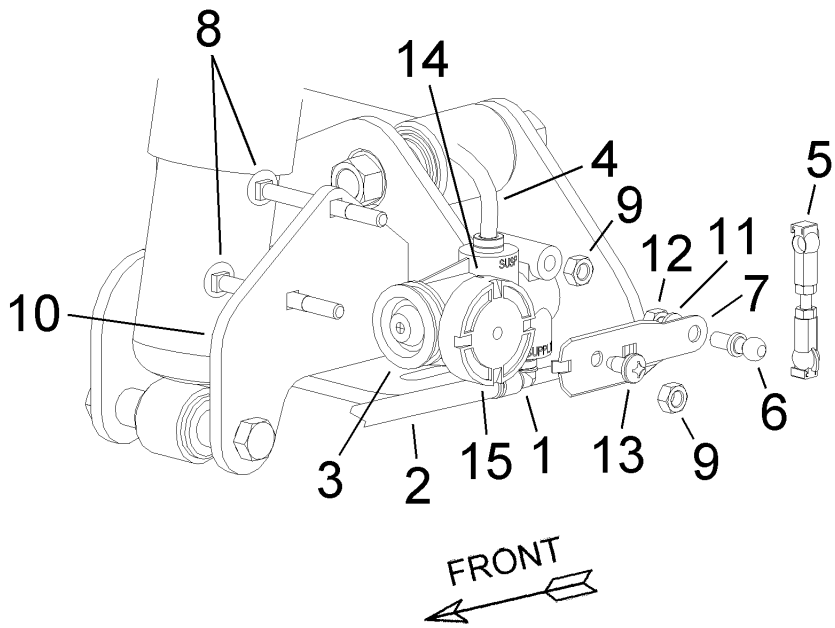

Figure 113 Cab Air Suspension Height Control Valve

1. PUSH TO CONNECT ELBOW FITTING
2. AIR LINE (SUPPLY)
3. HEIGHT CONTROL VALVE
4. AIR LINE (TO AIR SPRING)
5. HEIGHT CONTROL VALVE LINKAGE
6. THREADED BALL PIVOT
7. HEIGHT CONTROL VALVE ARM
8. CARRIAGE BOLT, 1/4 UNC X 1 3/4
9. HEX LOCK NUT, 1/4 UNC
10. CROSSMEMBER MOUNTING PLATE
11. LOCK WASHER, 1/4
12. HEX NUT, 1/4 UNC
13. PAN HEAD BEARING SCREW, 1/4–15 X 1/2
14. DRIVE BEARING NOTCH FOR VALVE ORIENTATION
15. DRIVE BEARING

Remove Cab Air Suspension Shock Absorber

Refer to Figure 112 (See Figure 112, page 165) for Items in parentheses.

1. Remove shock absorber (Item 5) as follows.
   a. Remove hex head bolt and hex lock nut (Items 18 and 19) at the top of shock absorber (Item 5).
   b. Remove hex head bolt and hex lock nut (Items 18 and 19) at the bottom of shock absorber (Item 5).
   c. Remove shock absorber (Item 5) from between cab mounting plate (Item 1) and crossmember mounting plate (Item 2).
2. Remove shock absorber (Item 6) as follows.
   a. Remove hex head bolt and hex lock nut (Items 18 and 19) at the top of shock absorber (Item 6).
   b. Remove hex head bolt and hex lock nut (Items 18 and 19) at the bottom of shock absorber (Item 6).
   c. Remove shock absorber (Item 6) from between cab mounting plate (Item 1) and crossmember mounting plate (Item 2).

Remove Cab Air Suspension Air Spring (Bag)

1. Drain air from air system.

> **WARNING – To avoid personal injury, whenever any component is serviced or removed from air system, be sure air system is drained and be sure to set parking brake and/or block vehicle wheels to prevent it from moving while service is being performed.**

Refer to Figure 112 (See Figure 112, page 165) for Items in parentheses.

2. Loosen compression nut of elbow fitting (Item 12) at the top of air spring (bag) (Item 4) and remove air line (to air spring) (Item 13) from elbow fitting.
3. Remove elbow fitting (Item 12) from hex nipple fitting (Item 11) at top of air spring (bag) (Item 4).
4. Remove hex nipple fitting (Item 11) from top of air spring (bag) (Item 4).
5. Remove hex head bolt and lock washer (Items 21 and 22) from the top of air spring (bag) (Item 4) at cab mounting plate (Item 1).
6. Remove machine screw (Item 20) from the bottom of air spring (bag) (Item 4) under crossmember mounting plate (Item 2).
7. Slide air spring (bag) (Item 4) from between cab mounting plate (Item 1) and crossmember mounting plate (Item 2).

Remove Lateral Control Rod

Refer to Figure 112 (See Figure 112, page 165) for Items in parentheses.

1. Remove lateral control rod (Item 3) as follows.

a. Remove hex head bolt (Item 23) and hex lock nut (Item 24) from mounting bracket of crossmember mounting plate (Item 2) and lateral control rod (Item 3).

b. Remove hex head bolt (Item 23) and hex lock nut (Item 24) from cab mounting plate (Item 1) and lateral control rod (Item 3) and remove lateral control rod.

4.43. CAB AIR SUSPENSION SYSTEM FOR 9100*I* AND 9200*I*DAY CAB MODELS AFTER MARCH 1997

WARNING – For safety purposes cab air suspension must be supplied from a pressure protected air supply.

Refer to Figure 112 (See Figure 112, page 165) for Items in parentheses.

The cab air suspension system for the 9100*i* and 9200*i* day cab models after March 1997 contains one air spring (bag) (Item 4), two shock absorbers (Items 5 and 6), and is controlled by the height control valve (Item 7). The air suspension assembly (Figure 112) (See Figure 112, page 165) needs no lubrication and very little maintenance

The following components - air line (to air spring) (Item 13), hex nipple fitting (Item 11), elbow fitting (Item 12), air spring (bag) (Item 4), height control valve (Item 7), shock absorbers (Items 5 and 6) and lateral control rod (Item 3) - should be checked at the time the truck is being serviced. Immediate corrective action should be taken if a malfunction occurs.

NOTE – The height control valve (Item 7), air spring (bag) (Item 4) and shock absorbers (Items 5 and 6) are serviceable and can be replaced individually.

Periodically check tightness of all fasteners and air line fitting connections. Refer to the **TORQUE CHART** for (Figure 112) (See Figure 112, page 165) for proper tightening of all fasteners and air line fitting connections.

Remove Height Control Valve

NOTE – If there is an attempt to disassemble or adjust fittings on the height control valve (Item 7, Figure 112) (See Figure 112, page 165), it will void the warranty. Contact the air suspension manufacturer for assistance.

1. Drain air from air system.

WARNING – To avoid personal injury, whenever any component is serviced or removed from air system, be sure to set parking brake and/or block vehicle wheels to prevent it from moving while service is being performed.

Refer to Figure 113 (See Figure 113, page 167) for Items in parentheses.

2. Press and hold release button against fitting body and pull air line (supply) (Item 2) from push to connect elbow fitting (Item 1) in “SUPPLY” port of height control valve (Item 3).

3. Press and hold release button against fitting body and pull push to connect elbow fitting (Item 1) from “SUPPLY” port of height control valve (Item 3).

4. Press and hold release button against fitting body and pull air line (to air spring) (Item 4) from “SUSP” port of height control valve (Item 3).

5. Remove height control valve linkage (Item 5) from threaded ball pivot (Item 6) by unlatching linkage clip and carefully pry the height control valve linkage socket from threaded ball pivot on height control valve arm (Item 7).

6. Remove two carriage bolts and hex lock nuts (Items 8 and 9) and remove height control valve (Item 3) from mounting bracket of crossmember mounting plate (Item 10).

Remove Cab Air Suspension Shock Absorber

Refer to Figure 112 (See Figure 112, page 165) for Items in parentheses.

1. Remove shock absorber (Item 5) as follows.
   a. Remove hex head bolt and hex lock nut (Items 18 and 19) at the top of shock absorber (Item 5).
   b. Remove hex head bolt and hex lock nut (Items 18 and 19) at the bottom of shock absorber (Item 5).
   c. Remove shock absorber (Item 5) from between cab mounting plate (Item 1) and crossmember mounting plate (Item 2).

2. Remove shock absorber (Item 6) as follows.
   a. Remove hex head bolt and hex lock nut (Items 18 and 19) at the top of shock absorber (Item 6).
   b. Remove hex head bolt and hex lock nut (Items 18 and 19) at the bottom of shock absorber (Item 6).
   c. Remove shock absorber (Item 6) from between cab mounting plate (Item 1) and crossmember mounting plate (Item 2).

Remove Cab Air Suspension Air Spring (Bag)

1. Drain air from air system.

> **WARNING – To avoid personal injury, whenever any component is serviced or removed from air system, be sure air system is drained and be sure to set parking brake and/or block vehicle wheels to prevent it from moving while service is being performed.**

Refer to Figure 112 (See Figure 112, page 165) for Items in parentheses.

2. Loosen compression nut of elbow fitting (Item 12) at the top of air spring (bag) (Item 4) and remove air line (to air spring) (Item 13) from elbow fitting.

3. Remove elbow fitting (Item 12) from hex nipple fitting (Item 11) at top of air spring (bag) (Item 4).

4. Remove hex nipple fitting (Item 11) from top of air spring (bag) (Item 4).

5. Remove hex head bolt and lock washer (Items 21 and 22) from the top of air spring (bag) (Item 4) at cab mounting plate (Item 1).

6. Remove machine screw (Item 20) from the bottom of air spring (bag) (Item 4) under crossmember mounting plate (Item 2).

7. Slide air spring (bag) (Item 4) from between cab mounting plate (Item 1) and crossmember mounting plate (Item 2).

Remove Lateral Control Rod

Refer to Figure 112 (See Figure 112, page 165) for Items in parentheses.

1. Remove lateral control rod (Item 3) as follows.
   a. Remove hex head bolt (Item 23) and hex lock nut (Item 24) from mounting bracket of crossmember mounting plate (Item 2) and lateral control rod (Item 3).
   b. Remove hex head bolt (Item 23) and hex lock nut (Item 24) from cab mounting plate (Item 1) and lateral control rod (Item 3) and remove lateral control rod.

4.44. CAB AIR SUSPENSION SYSTEM FOR 9200//9400//9900/ MODELS WITH PRO-SLEEPER® BEFORE APRIL 2000

WARNING – For safety purposes cab air suspension must be supplied from a pressure protected air supply.

Refer to Figure 114 (See Figure 114, page 172) for Items in parentheses.

The cab air suspension system for the 9200*i*, 9400*i* and 9900*i* models with Pro-Sleeper® before April 2000 contains two air springs (bags) (Item 14), two shock absorbers (Item 8), and is controlled by the height control valve (Item 1). The air suspension assembly (Figure 114) (See Figure 114, page 172) needs no lubrication and very little maintenance.

The following components - air lines (to air spring) (Items 21 and 23), elbow fittings (Item 25), air springs (bags) (Item 14), height control valve (Item 1), shock absorbers (Item 8) and lateral control arm (Item 26) - should be checked at the time the truck is being serviced. Immediate corrective action should be taken if a malfunction occurs.

NOTE – The height control valve (Item 1), air springs (bags) (Item 14) and shock absorbers (Item 8) are serviceable and can be replaced individually.

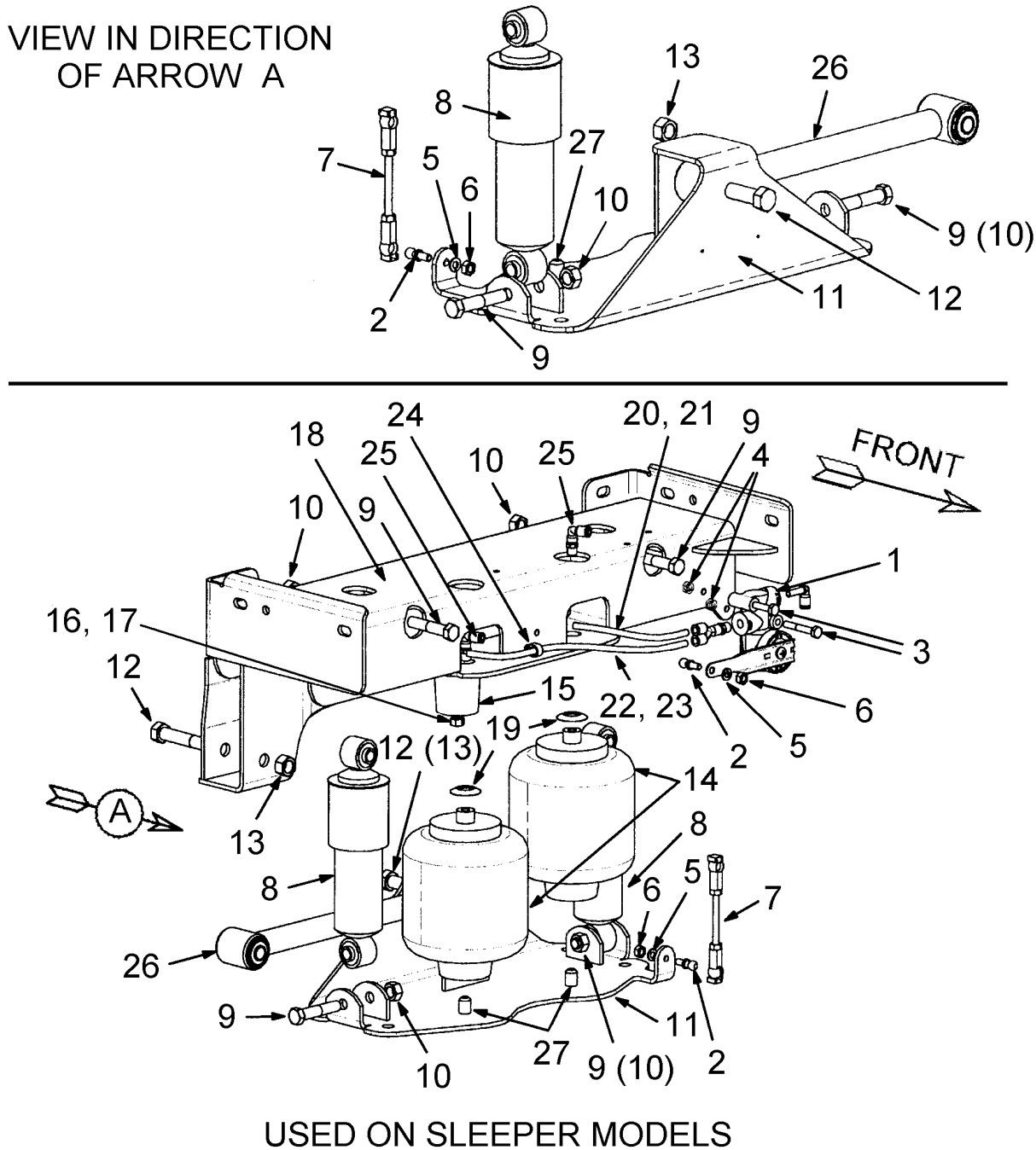

Figure 114 Cab Air Suspension System for 9200*i*/9400*i*/9900*i* Models with Pro-Sleeper® before April 2000

1. HEIGHT CONTROL VALVE
2. THREADED BALL PIVOT
3. HEX HEAD BOLT, 1/4 UNC X 3/4
4. HEX LOCK NUT, 1/4 UNC
5. LOCK WASHER, 1/4
6. HEX NUT, 1/4 UNC
7. FIXED HEIGHT CONTROL VALVE LINKAGE
8. SHOCK ABSORBER
9. HEX HEAD BOLT, 7/16 UNF X 2–1/4
10. HEX LOCK NUT, 7/16 UNF
11. CROSSMEMBER MOUNTING PLATE
12. HEX HEAD BOLT, 1/12 UNF X 3
13. HEX LOCK NUT, 1/2 UNF
14. AIR SPRING (BAG)
15. RUBBER BUMPER
16. CARRIAGE BOLT, 5/16–18 UNC X 1–1/2
17. HEX LOCK NUT, 5/16 UNC
18. CAB MOUNTING PLATE
19. RETAINING RING, 3/4
20. CORRUGATED LOOM, 1/4 X 6
21. AIR LINE (TO AIR SPRING), 1/4 X 14–1/2
22. CORRUGATED LOOM, 1/4 X 7
23. AIR LINE (TO AIR SPRING), 1/4 X 22–1/2
24. LATCH CLIP
25. PUSH TO CONNECT ELBOW FITTING, 1/4 TB 1/8 N-NPT
26. LATERAL CONTROL ROD
27. THREADED STUD

Periodically check tightness of all fasteners and air line fitting connections. Refer to the **TORQUE CHART** for (Figure 114) (See Figure 114, page 172) for proper tightening of all fasteners and air line fitting connections.

Remove Height Control Valve

NOTE – If there is an attempt to disassemble or adjust fittings on the height control valve (Item 1, Figure 114) (See Figure 114, page 172), it will void the warranty. Contact the air suspension manufacturer for assistance.

1. Drain air from air system.

> ⚠ **WARNING – To avoid personal injury, whenever any component is serviced or removed from air system, be sure to set parking brake and/or block vehicle wheels to prevent it from moving while service is being performed.**

Refer to Figure 115 for Items in parentheses.

2. Press and hold release button against fitting body and pull one of the air lines (to air springs) (Item 1) from “Y" push-in connector (Item 2) in “SUSP" port of height control valve (Item 3).

3. Repeat step 2. above to pull the other air line (to air springs) (Item 1) from “Y" push-in connector (Item 2) in “SUSP" port of height control valve (Item 3).

4. Press and hold release button against fitting body and pull “Y” push-in connector (Item 2) from “SUSP" port of height control valve (Item 3).

5. Press and hold release button against fitting body and pull air line (supply) (Item 4) from push to connect elbow fitting (Item 5) in “SUPPLY” port of the height control valve (Item 3).

6. Press and hold release button against fitting body and pull push to connect elbow fitting (Item 5) from “SUPPLY” port of the height control valve (Item 3).

7. Remove height control valve linkage (Item 6) from threaded ball pivot by unlatching linkage clip and carefully pry the height control valve linkage socket from threaded ball pivot on height control valve lever (Item 9).

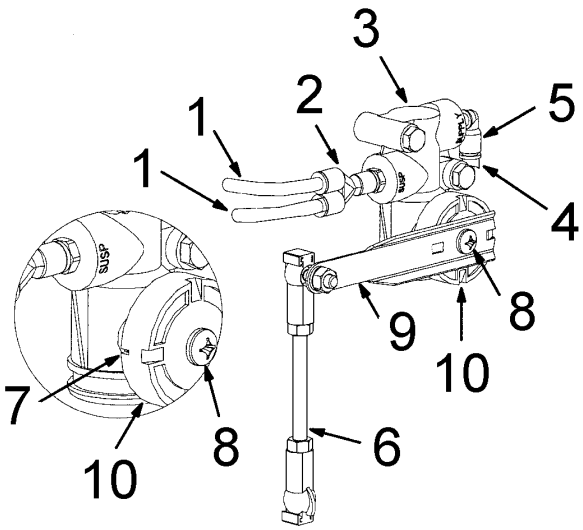

Figure 115 Cab Air Suspension Height Control Valve

1. AIR LINE (TO AIR SPRING)
2. “Y” PUSH-IN CONNECTOR
3. HEIGHT CONTROL VALVE
4. AIR LINE (SUPPLY)
5. PUSH TO CONNECT ELBOW FITTING
6. HEIGHT CONTROL VALVE LINKAGE
7. DRIVE BEARING NOTCH FOR VALVE ORIENTATION
8. PAN HEAD BEARING SCREW
9. HEIGHT CONTROL VALVE LEVER
10. DRIVE BEARING

Refer to Figure 114 (See Figure 114, page 172) for Items in parentheses.

8. Remove two hex head bolts and hex lock nuts (Items 3 and 4) and remove height control valve (Item 1) from cab mounting plate (Item 18).

Remove Cab Air Suspension Shock Absorber

Refer to Figure 114 (See Figure 114, page 172) for Items in parentheses.

1. Remove hex head bolts and hex lock nuts (Items 9 and 10) at the top and bottom of both shock absorbers (Item 8).

2. Remove shock absorbers (Item 8) from between cab mounting plate (Item 18) and crossmember mounting plate (Item 11).

Remove Cab Air Suspension Air Spring (Bag)

1. Drain air from air system.

> **WARNING – To Avoid personal injury, whenever any component is serviced or removed from air system, be sure air system is drained and be sure to set parking brake and/or block vehicle wheels to prevent it from moving while service is being performed.**

Refer to Figure 114 (See Figure 114, page 172) for Items in parentheses unless otherwise noted.

2. Press and hold release button against fitting body and pull air line (to air spring) (Item 21) from push to connect elbow fitting (Item 25) at top of driver side air spring (bag) (Item 14).

3. Press and hold release button against fitting body and pull push to connect elbow fitting (Item 25) from driver side air spring (bag) (Item 14).

4. Press and hold release button against fitting body and pull air line (to air spring) (Item 23) from push to connect elbow fitting (Item 25) at top of passenger side air spring (bag) (Item 14).

5. Press and hold release button against fitting body and pull push to connect elbow fitting (Item 25) from passenger side air spring (bag) (Item 14).

6. Remove retaining rings (Item 19) from stud at top of both air springs (bags) (Item 14).

7. Carefully raise cab for enough clearance to remove air springs (bags) (Item 14) as follows.

8. Use a suitable jack placed on frame rail flange and back of cab floor frame (Figure 106) (See Figure 106, page 148).

9. Once the jack is positioned properly, carefully raise cab for enough clearance to remove top stud of air springs (bags) (Item 14) from cab mounting plate (Item 18).

> **CAUTION – Over-raising of cab may cause component damage.**

10. Once the cab has been raised enough to allow top stud of both air springs (bags) (Item 14) to clear the cab mounting plate (Item 18), screw air springs (bags) off threaded studs (Item 27) of crossmember mounting plate (Item 11) and remove air springs (bags).

Remove Lateral Control Rod

Refer to Figure 114 (See Figure 114, page 172) for Items in parentheses.

1. Remove lateral control rod (Item 26) as follows.
   a. Remove hex head bolt (Item 12) and hex lock nut (Item 13) from mounting bracket of crossmember mounting plate (Item 11) and lateral control rod (Item 26).
   b. Remove hex head bolt (Item 12) and hex lock nut (Item 13) from cab mounting plate (Item 18) and lateral control rod (Item 26) and remove lateral control rod.

4.45. CAB AIR SUSPENSION SYSTEM FOR 9200*i*/9400*i*/9900*i* MODELS WITH PRO-SLEEPER® AFTER APRIL 2000

WARNING – For safety purposes cab air suspension must be supplied from a pressure protected air supply.

Refer to Figure 116 (See Figure 116, page 177) for Items in parentheses.

The cab air suspension system for the 9200*i*, 9400*i* and 9900*i* models with Pro-Sleeper® after April 2000 contains two air springs (bags) (Item 14), two shock absorbers (Item 8), and is controlled by the height control valve (Item 1). The air suspension assembly (Figure 116) (See Figure 116, page 177) needs no lubrication and very little maintenance.

The following components - air lines (to air spring) (Item 20), two elbow fittings (Item 21), tee fitting (Item 22), air springs (Item 14), height control valve (Item 1), shock absorbers (Item 8) and lateral control arm (Item 26) - should be checked at the time the truck is being serviced. Immediate corrective action should be taken if a malfunction occurs.

NOTE – The height control valve (Item 1), air springs (bags) (Item 14) and shock absorbers (Item 8) are serviceable and can be replaced individually.

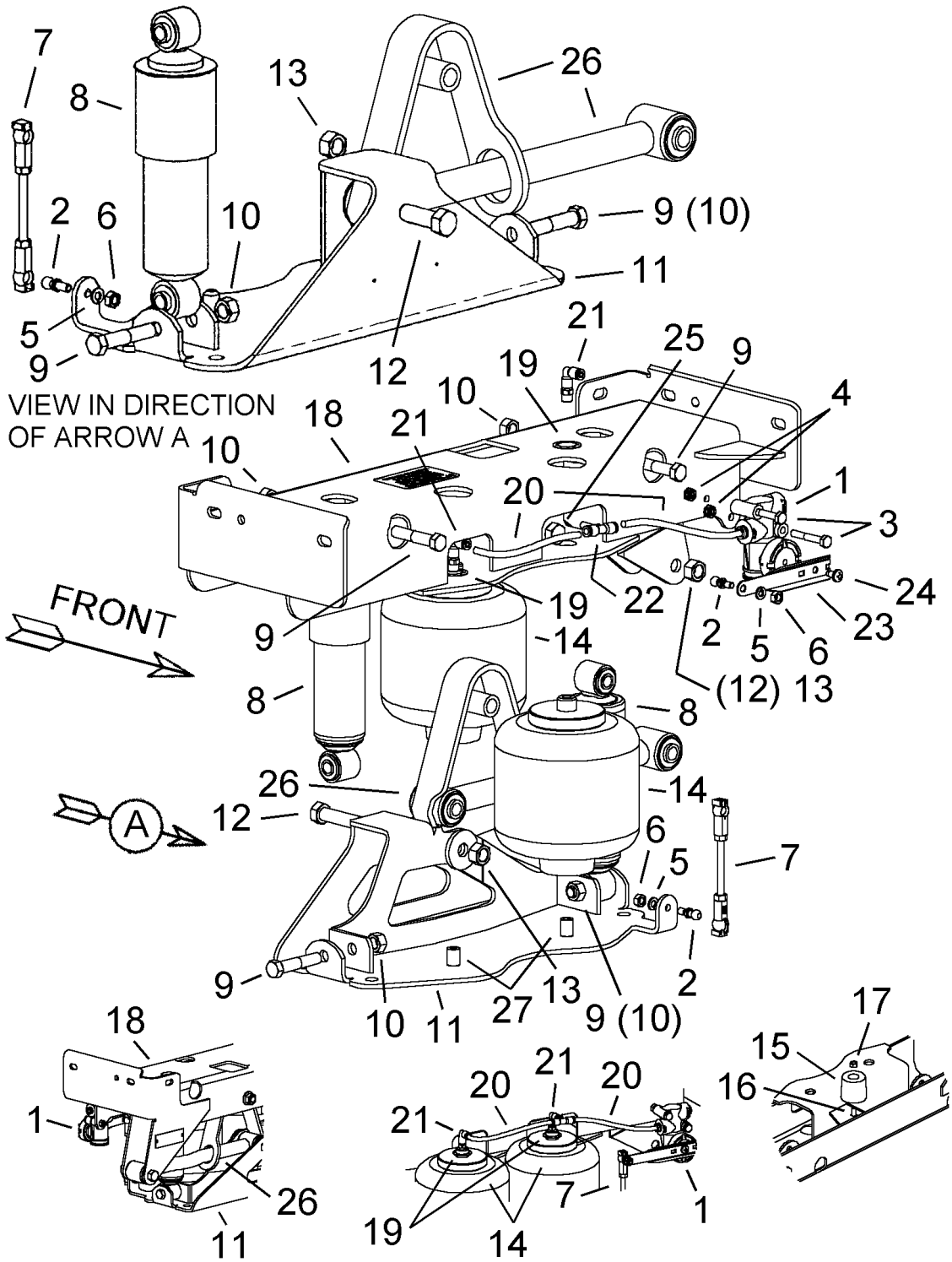

Figure 116 Cab Air Suspension System for 9200*i*/9400*i*/9900*i* Models with Pro-Sleeper® after April 2000

1. HEIGHT CONTROL VALVE
2. THREADED BALL PIVOT
3. HEX HEAD BOLT, 1/4 UNC X 3/4
4. HEX LOCK NUT, 1/4 UNC
5. LOCK WASHER, 1/4
6. HEX NUT, 1/4 UNC
7. FIXED HEIGHT CONTROL VALVE LINKAGE
8. SHOCK ABSORBER
9. HEX HEAD BOLT, 7/16 UNF X 2–1/4
10. HEX LOCK NUT, 7/16 UNF
11. CROSSMEMBER MOUNTING PLATE
12. HEX HEAD BOLT, 1/12 UNF X 3
13. HEX LOCK NUT, 1/2 UNF
14. AIR SPRING (BAG)
15. RUBBER BUMPER
16. CARRIAGE BOLT, 5/16–18 UNC X 1–1/2
17. HEX LOCK NUT, 5/16 UNC
18. CAB MOUNTING PLATE
19. RETAINING RING, 3/4
20. AIR LINE (TO AIR SPRING), 1/4 X 7
21. PUSH TO CONNECT ELBOW FITTING, 1/4 TB 1/8 M-NPT
22. PUSH TO CONNECT TEE BRANCH FITTING, 1/4 TB 1/4 PTC
23. HEIGHT CONTROL VALVE LEVER
24. PAN HEAD BEARING SCREW, 1/4–15 X 1/2
25. HEX HEAD BOLT, 1/12 UNC X 3 1/2
26. LATERAL CONTROL ROD
27. THREADED STUD

Periodically check tightness of all fasteners and air line fitting connections. Refer to the **TORQUE CHART** for (Figure 116) (See Figure 116, page 177) for proper tightening of all fasteners and air line fitting connections.

Remove Height Control Valve

NOTE – If there is an attempt to disassemble or adjust fittings on the height control valve (Item 1, Figure 116) (See Figure 116, page 177), it will void the warranty. Contact the air suspension manufacturer for assistance.

1. Drain air from air system.

> ⚠ **WARNING – To avoid personal injury, whenever any component is serviced or removed from air system, be sure to set parking brake and/or block vehicle wheels to prevent it from moving while service is being performed.**

Refer to Figure 117 for Items in parentheses.

2. Press and hold release button against fitting body and pull air line (to air springs) (Item 1) from in “SUSP" port of height control valve (Item 2).

3. Press and hold release button against fitting body and pull air line (supply) (Item 3) from “SUPPLY” port of the height control valve (Item 2).

4. Remove height control valve linkage (Item 4) from threaded ball pivot (Item 2, Figure 116) (See Figure 116, page 177) by unlatching linkage clip and carefully pry the height control valve linkage socket from threaded ball pivot on height control valve lever (Item 5).

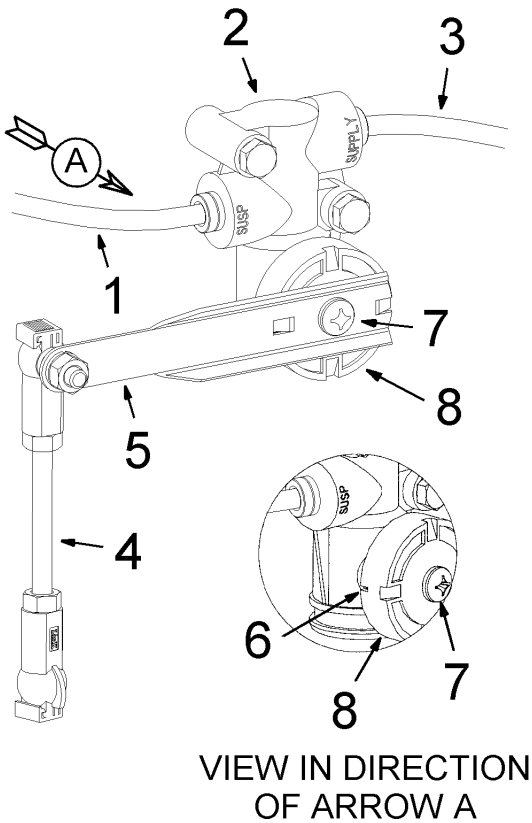

Figure 117 Cab Air Suspension Height Control Valve

1. AIR LINE (TO AIR SPRINGS)
2. HEIGHT CONTROL VALVE
3. AIR LINE (SUPPLY)
4. HEIGHT CONTROL VALVE LINKAGE
5. HEIGHT CONTROL VALVE LEVER
6. DRIVE BEARING NOTCH FOR VALVE ORIENTATION
7. PAN HEAD BEARING SCREW
8. DRIVE BEARING

Refer to Figure 116 (See Figure 116, page 177) for Items in parentheses.

5. Remove two hex head bolts and hex lock nuts (Items 3 and 4) and remove height control valve (Item 1) from cab mounting plate (Item 18).

Remove Cab Air Suspension Shock Absorber

Refer to Figure 116 (See Figure 116, page 177) for Items in parentheses.

1. Remove hex head bolts and hex lock nuts (Items 9 and 10) at the top and bottom of the shock absorbers (Item 8).

2. Remove shock absorbers (Item 8) from between cab mounting plate (Item 18) and crossmember mounting plate (Item 11).

Remove Cab Air Suspension Air Spring (Bag)

1. Drain air from air system.

> **WARNING – To Avoid personal injury, whenever any component is serviced or removed from air system, be sure air system is drained and be sure to set parking brake and/or block vehicle wheels to prevent it from moving while service is being performed.**

Refer to Figure 116 (See Figure 116, page 177) for Items in parentheses unless otherwise noted.

2. Press and hold release button against fitting body and pull air line (to air spring) (Item 20) from push to connect tee fitting (Item 22) in push to connect elbow fitting (Item 21) at top of driver side air spring (bag) (Item 14).

3. Press and hold release button against fitting body and pull air line (to air spring) (Item 20) from other side of push to connect tee fitting (Item 22) in push to connect elbow fitting (Item 21) at top of driver side air spring (bag) (Item 14).

4. Press and hold release button against fitting body and pull push to connect tee fitting (Item 22) from push to connect elbow fitting (Item 21) at top of driver side air spring (bag) (Item 14).

5. Press and hold release button against fitting body and pull push to connect elbow fitting (Item 21) from top of driver side air spring (bag) (Item 14).

6. Press and hold release button against fitting body and pull air line (to air spring) (Item 20) from push to connect elbow fitting (Item 21) at top of passenger side air spring (bag) (Item 14).

7. Press and hold release button against fitting body and pull push to connect elbow fitting (Item 21) from top of passenger side air spring (bag) (Item 14).

8. Remove retaining ring (Item 19) from stud at top of both air springs (bags) (Item 14).

9. Carefully raise cab for enough clearance to remove air springs (bags) (Item 14) as follows.

10. Use a suitable jack placed on frame rail flange and back of cab floor frame (Figure 106) (See Figure 106, page 148).

11. Once the jack is positioned properly, carefully raise cab for enough clearance to remove top stud of air springs (bags) (Item 14) from cab mounting plate (Item 18).

> **CAUTION – Over-raising of cab may cause component damage.**

12. Once the cab has been raised enough to allow top stud of both air springs (bags) (Item 14) to clear the cab mounting plate (Item 18), screw air springs (bags) off threaded studs (Item 27) of crossmember mounting plate (Item 11) and remove air springs (bags).

13. Once the cab has been raised, screw air springs (bags) (Item 14) off threaded studs (Item 27) on crossmember mounting plate (Item 11), then slide air springs (bags) from between cab mounting plate (Item 18) and crossmember mounting plate.

Remove Lateral Control Rod

Refer to Figure 116 (See Figure 116, page 177) for Items in parentheses.

1. Remove lateral control rod (Item 26) as follows.
   a. Remove hex head bolt (Item 12) and hex lock nut (Item 13) from mounting bracket of crossmember mounting plate (Item 11) and lateral control rod (Item 26).
   b. Remove hex head bolt (Item 12) and hex lock nut (Item 13) from cab mounting plate (Item 18) and lateral control rod (Item 26) and remove lateral control rod.

4.46. CAB AIR SUSPENSION SYSTEM FOR 5000*i* SERIES BEFORE SEPTEMBER 1997

WARNING – For safety purposes cab air suspension must be supplied from a pressure protected air supply.

Refer to Figure 118 (See Figure 118, page 182) for Items in parentheses.

The cab air suspension system for the 5000*i* Series before September 1997 contains two air springs (bags) (Item 1), two shock absorbers (Item 2), and is controlled by the height control valve (Item 3). The air suspension assembly (Figure 118) (See Figure 118, page 182) needs no lubrication and very little maintenance.

The following components - air lines (to air spring) (Item 5), elbow fittings (Item 4), air springs (bags) (Item 1), height control valve (Item 3), shock absorbers (Item 2) and lateral control arm (Item 23) - should be checked at the time the vehicle is being serviced. Immediate corrective action should be taken if a malfunction occurs.

NOTE – The height control valve (Item 3), air springs (bags) (Item 1) and shock absorbers (Item 2) are serviceable and can be replaced individually.

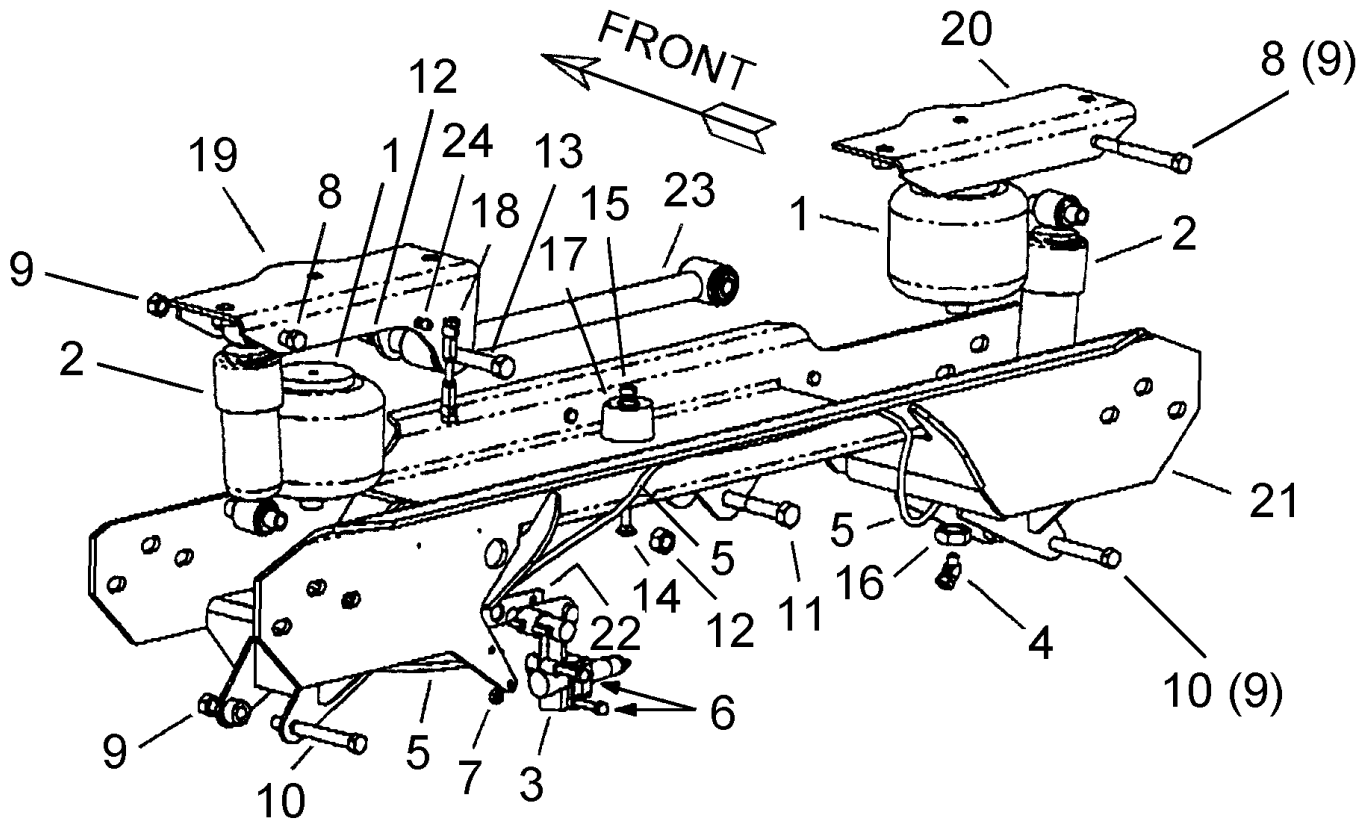

Figure 118 Cab Air Suspension System for 5000*i* Series before September 1997

1. AIR SPRING (BAG)
2. SHOCK ABSORBER
3. HEIGHT CONTROL VALVE
4. ELBOW FITTING, 45°, 1/4 TB, 1/8 M–NPT
5. AIR LINE (TO AIR SPRING), 1/4
6. HEX HEAD BOLT, 1/4–20 UNC X 2 1/4
7. HEX LOCK NUT, 1/4 UNC
8. HEX HEAD BOLT, 7/16 UNF X 4
9. HEX LOCK NUT, 7/16 UNF
10. HEX HEAD BOLT, 7/16 UNF X 3 1/2
11. HEX HEAD BOLT, 1/12 UNF X 3
12. HEX LOCK NUT, 1/2 UNF
13. HEX HEAD BOLT, 1/12 UNF X 4
14. CARRIAGE BOLT, 5/16–18 UNC X 1
15. HEX LOCK NUT, 5/16 UNC
16. JAM NUT
17. RUBBER BUMPER
18. HEIGHT CONTROL VALVE LINKAGE
19. CAB MOUNT PLATE (LEFT)
20. CAB MOUNT PLATE (RIGHT)
21. SUSPENSION CROSSMEMBER BRACKET
22. VALVE ARM ASSEMBLY
23. LATERAL CONTROL ARM
24. THREADED BALL PIVOT

Periodically check tightness of all fasteners and air line fitting connections. Refer to the **TORQUE CHART** for (Figure 118) (See Figure 118, page 182) for proper tightening of all fasteners and air line fitting connections.

Remove Height Control Valve

NOTE – If there is an attempt to disassemble or adjust fittings on the height control valve (Item 3, Figure 118) (See Figure 118, page 182), it will void the warranty. Contact the air suspension manufacturer for assistance.

1. Drain air from air system.

> ⚠ **WARNING – To avoid personal injury, whenever any component is serviced or removed from air system, be sure to set parking brake and/or block vehicle wheels to prevent it from moving while service is being performed.**

Refer to Figure 119 for Items in parentheses.

2. Press and hold release button against fitting body and pull push to connect connector (Item 4) and air line (supply) (Item 1) from elbow fitting in “SUPPLY” port of height control valve (Item 3).

3. Loosen compression nut (Item 8) and pull air line (to air spring) (Item 2) from elbow fitting in “SUSP” port of height control valve (Item 3).

4. Remove height control valve linkage (Item 5) from threaded ball pivot (Item 24, Figure 118) (See Figure 118, page 182) by unlatching linkage clip and carefully pry the height control valve linkage socket from threaded ball pivot on height control valve arm (Item 6).

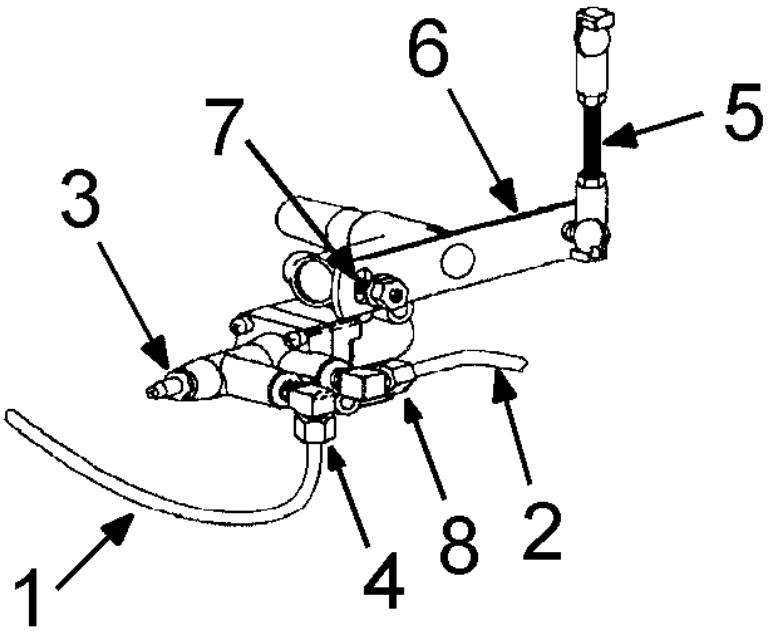

Figure 119 Cab Air Suspension Height Control Valve

1. AIR LINE (SUPPLY)
2. AIR LINE (TO AIR SPRING)
3. HEIGHT CONTROL VALVE
4. PUSH TO CONNECT CONNECTOR
5. HEIGHT CONTROL VALVE LINKAGE
6. HEIGHT CONTROL VALVE ARM
7. SLOT FOR COARSE ADJUSTMENT
8. COMPRESSION NUT (TIGHTEN HAND TIGHT + ONE TURN)

Refer to Figure 118 (See Figure 118, page 182) for Items in parentheses.

5. Remove hex head bolts and hex lock nuts (Items 6 and 7) and remove height control valve (Item 3) from suspension crossmember bracket (Item 21).

Remove Cab Air Suspension Shock Absorber

Refer to Figure 118 (See Figure 118, page 182) for Items in parentheses.

1. Remove hex head bolt and hex lock nut (Items 8 and 9) at the left cab mount plate (Item 19) at the top of shock absorber (Item 2).

2. Remove hex head bolt and hex lock nut (Items 10 and 9) at the mounting bracket of suspension crossmember bracket (Item 21) at the bottom of shock absorber (Item 2).

3. Remove shock absorber (Item 2) from between left cab mount plate (Item 19) and suspension crossmember bracket (Item 21).

4. Remove hex head bolt and hex lock nut (Items 8 and 9) at the right cab mount plate (Item 20) at the top of shock absorber (Item 2).

5. Remove hex head bolt and hex lock nut (Items 10 and 9) at the mounting bracket of suspension crossmember bracket (Item 21) at the bottom of shock absorber (Item 2).

6. Remove shock absorber (Item 2) from between right cab mount plate (Item 20) and suspension crossmember bracket (Item 21).

Remove Cab Air Suspension Air Spring (Bag)

1. Drain air from air system.

> **WARNING – To avoid personal injury, whenever any component is serviced or removed from air system, be sure air system is drained and be sure to set parking brake and/or block vehicle wheels to prevent it from moving while service is being performed.**

Refer to Figure 118 (See Figure 118, page 182) for Items in parentheses unless otherwise noted.

2. Loosen compression nut of elbow fitting (Item 4) and pull air line (to air spring) (Item 5) from elbow fitting at the bottom of each air spring (bag) (Item 1).

3. Remove elbow fittings (Item 4) from both air springs (bags) (Item 1).

4. Remove jam nuts (Item 16) from the threaded stud at the bottom of both air springs (bags) (Item 1).

5. Carefully raise cab for enough clearance to remove air springs (bags) (Item 1) as follows.

6. Use a suitable jack placed on frame rail flange and back of cab floor frame (Figure 106) (See Figure 106, page 148).

7. Once the jack is positioned properly, carefully raise cab for enough clearance to lift bottom threaded stud of both air springs (bags) (Item 1) from suspension crossmember bracket (Item 21).

> **CAUTION – Over-raising of cab may cause component damage.**

8. Once the cab has been raised, screw air spring (bag) (Item 1) off threaded stud on left cab mount plate (Item 19), then slide air spring (bag) from between left cab mount plate and suspension crossmember bracket (Item 21).

9. Once the cab has been raised, screw air spring (bag) (Item 1) off threaded stud on right cab mount plate (Item 20), then slide air spring (bag) from between right cab mount plate and suspension crossmember bracket (Item 21).

Remove Lateral Control Rod

Refer to Figure 118 (See Figure 118, page 182) for Items in parentheses.

1. Remove lateral control rod (Item 23) as follows.
   a. Remove hex head bolt (Item 11) and hex lock nut (Item 12) from mounting bracket of suspension crossmember bracket (Item 21) and lateral control rod (Item 23).

b. Remove hex head bolt (Item 13) and hex lock nut (Item 12) from cab mount plate (Item 19) and lateral control rod (Item 23) and remove lateral control rod.

4.47. CAB AIR SUSPENSION SYSTEM FOR 5000*I* SERIES AFTER SEPTEMBER 1997

WARNING – For safety purposes cab air suspension must be supplied from a pressure protected air supply.

Refer to Figure 120 (See Figure 120, page 187) for Items in parentheses.

The cab air suspension system for the 5000*i* Series after September 1997 contains two air springs (bags) (Item 1), two shock absorbers (Item 2), and is controlled by the height control valve (Item 3). The air suspension assembly (Figure 120) (See Figure 120, page 187) needs no lubrication and very little maintenance.

The following components - air lines (to air spring) (Item 4), elbow fittings (Item 6), tee fitting (Item 7), air springs (bags) (Item 1), height control valve (Item 3), shock absorbers (Item 2) and lateral control arm (Item 24) - should be checked at the time the vehicle is being serviced. Immediate corrective action should be taken if a malfunction occurs.

NOTE – The height control valve (Item 3), air springs (bags) (Item 1) and shock absorbers (Item 2) are serviceable and can be replaced individually.

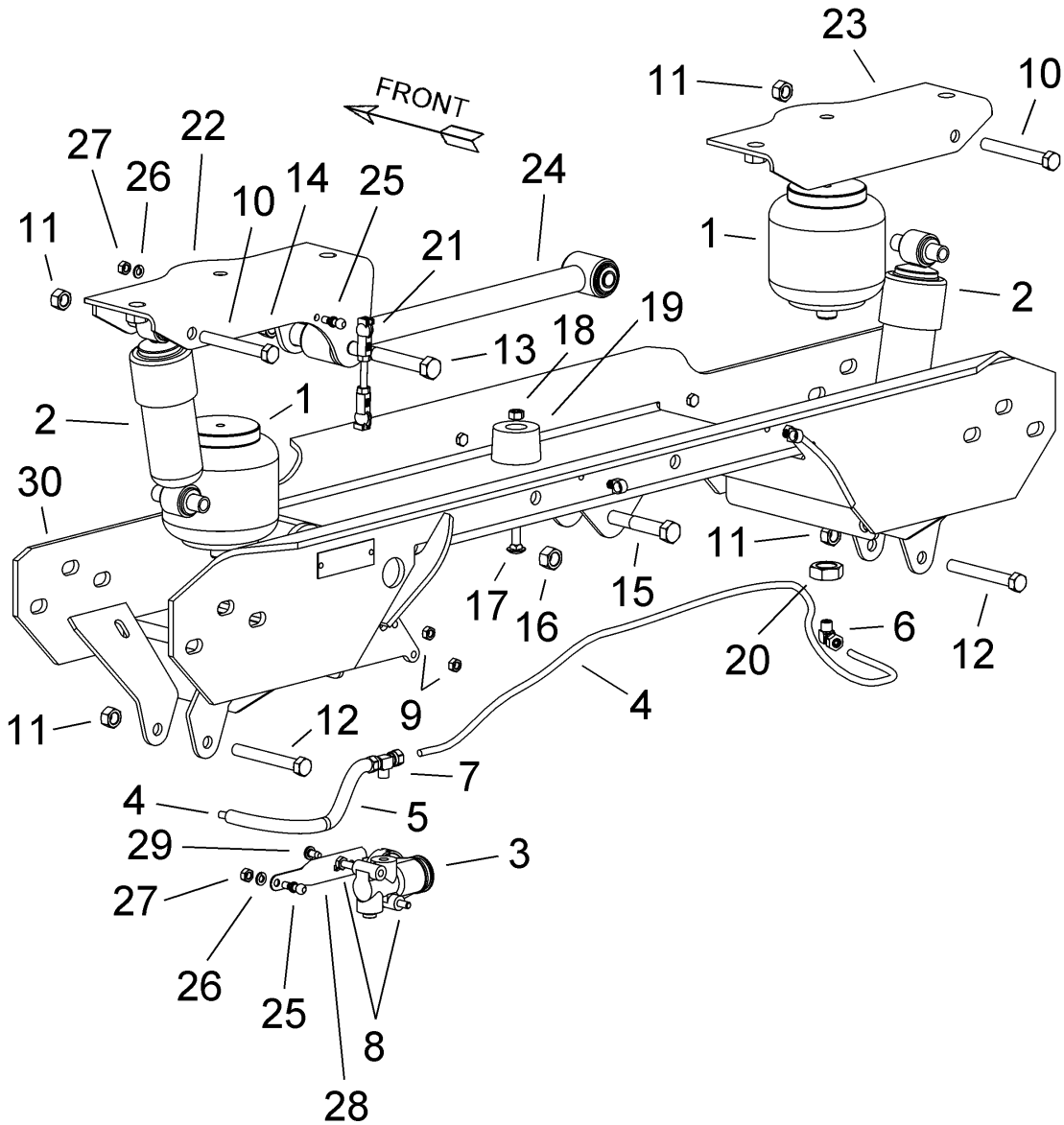

Figure 120 Cab Air Suspension System for 5000*i* Series after September 1997

1. AIR SPRING (BAG)
2. SHOCK ABSORBER
3. HEIGHT CONTROL VALVE
4. AIR LINE (TO AIR SPRING), 1/4
5. CORRUGATED LOOM, 1/4 X 6.88
6. PUSH TO CONNECT ELBOW FITTING, 45°, 1/4 TB, 1/8 M–NPT
7. PUSH TO CONNECT TEE FITTING, 1/4 TB, 1/8 M–NPT
8. HEX HEAD BOLT, 1/4–20 UNC X 1 3/4
9. HEX LOCK NUT, 1/4 UNC
10. HEX HEAD BOLT, 7/16 UNF X 4
11. HEX LOCK NUT, 7/16 UNF
12. HEX HEAD BOLT, 7/16 UNF X 3 1/2
13. HEX HEAD BOLT, 1/12 UNF X 4
14. HEX LOCK NUT, 1/2 UNF
15. HEX HEAD BOLT, 1/12 UNF X 3
16. HEX LOCK NUT, 1/2 UNF
17. CARRIAGE BOLT, 5/16–18 UNC X 1
18. HEX LOCK NUT, 5/16 UNC
19. RUBBER BUMPER
20. JAM NUT, 3/4 UNF
21. HEIGHT CONTROL VALVE LINKAGE
22. CAB MOUNT PLATE (LEFT)
23. CAB MOUNT PLATE (RIGHT)
24. LATERAL CONTROL ARM
25. THREADED BALL PIVOT
26. LOCK WASHER, 1/4
27. HEX NUT, 1/4 UNC
28. HEIGHT CONTROL VALVE LEVER
29. PAN HEAD BEARING SCREW 1/4–15 X 1/2
30. SUSPENSION CROSSMEMBER BRACKET

Periodically check tightness of all fasteners and air line fitting connections. Refer to the **TORQUE CHART** for (Figure 120) (See Figure 120, page 187) for proper tightening of all fasteners and air line fitting connections.

Remove Height Control Valve

NOTE – If there is an attempt to disassemble or adjust fittings on the height control valve (Item 3, Figure 120) (See Figure 120, page 187), it will void the warranty. Contact the air suspension manufacturer for assistance.

1. Drain air from air system.

> ⚠ **WARNING – To avoid personal injury, whenever any component is serviced or removed from air system, be sure to set parking brake and/or block vehicle wheels to prevent it from moving while service is being performed.**

Refer to Figure 121 for Items in parentheses.

2. Press and hold release button against fitting body and pull air line (supply) (Item 1) from “SUPPLY” port of height control valve (Item 3).

3. Loosen compression nut (Item 4) of push to connect tee fitting (Item 12) in “SUSP” port of height control valve (Item 3) and pull air line (to air spring) (Item 2) from push to connect tee fitting.

4. Loosen other compression nut (Item 4) of push to connect tee fitting (Item 12) in “SUSP” port of height control valve (Item 3) and pull air line (to air spring) (Item 2) from push to connect tee fitting.

5. Remove height control valve linkage (Item 5) from threaded ball pivot (Item 25, Figure 120) (See Figure 120, page 187) by unlatching linkage clip and carefully pry the height control valve linkage socket from threaded ball pivot on height control valve lever (Item 6).

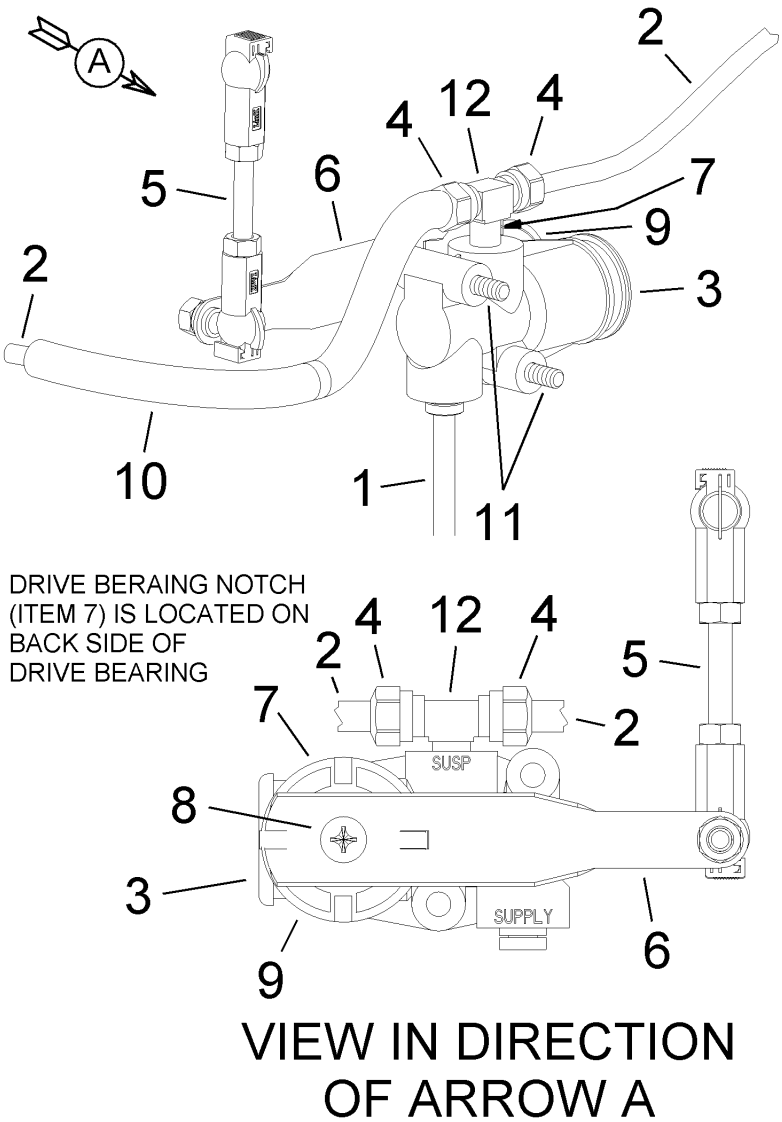

Figure 121 Removing Height Control Valve

1. AIR LINE (SUPPLY)
2. AIR LINE (TO AIR SPRING)
3. HEIGHT CONTROL VALVE
4. AIR LINE COMPRESSION NUT (TIGHTEN HAND TIGHT + 1 TURN)
5. HEIGHT CONTROL VALVE LINKAGE
6. HEIGHT CONTROL VALVE LEVER
7. DRIVE BEARING NOTCH FOR VALVE ORIENTATION
8. PAN HEAD BEARING SCREW
9. DRIVE BEARING
10. CORRUGATED LOOM, 1/4 X 6.88
11. HEX HEAD BOLT, 1/4–20 UNC X 1–3/4
12. PUSH TO CONNECT TEE FITTING, 1/4 TB, 1/8 M–NPT

Refer to Figure 120 (See Figure 120, page 187) for Items in parentheses.

6. Remove two hex head bolts and hex lock nuts (Items 8 and 9) and remove height control valve (Item 3) from suspension crossmember bracket (Item 30).

Remove Cab Air Suspension Shock Absorber

Refer to Figure 120 (See Figure 120, page 187) for Items in parentheses.

1. Remove hex head bolt and hex lock nut (Items 10 and 11) at the left cab mount plate (Item 22) at the top of shock absorber (Item 2).

2. Remove hex head bolt and hex lock nut (Items 12 and 11) at the mounting bracket of suspension crossmember bracket (Item 30) at the bottom of shock absorber (Item 2).

3. Remove shock absorber (Item 2) from between left cab mount plate (Item 22) and suspension crossmember bracket (Item 30).

4. Remove hex head bolt and hex lock nut (Items 10 and 11) at the right cab mount plate (Item 23) at the top of shock absorber (Item 2).

5. Remove hex head bolt and hex lock nut (Items 12 and 11) at the mounting bracket of suspension crossmember bracket (Item 30) at the bottom of shock absorber (Item 2).

6. Remove shock absorber (Item 2) from between right cab mount plate (Item 23) and suspension crossmember bracket (Item 30).

Remove Cab Air Suspension Air Spring (Bag)

1. Drain air from air system.

> **WARNING – To avoid personal injury, whenever any component is serviced or removed from air system, be sure air system is drained and be sure to set parking brake and/or block vehicle wheels to prevent it from moving while service is being performed.**

Refer to Figure 120 (See Figure 120, page 187) for Items in parentheses unless otherwise noted.

2. Loosen compression nut of push to connect elbow fitting (Item 6) and pull air line (to air spring) (Item 4) from push to connect elbow fitting at the bottom of driver side air spring (bag) (Item 1).

3. Loosen compression nut of push to connect elbow fitting (Item 6) and pull air line (to air spring) (Item 4) from push to connect elbow fitting at the bottom of passenger side air spring (bag) (Item 1).

4. Press and hold release button against fitting body and pull push to connect elbow fitting (Item 6) from both air springs (bags) (Item 1).

5. Remove jam nuts (Item 20) from the threaded stud at the bottom of both air springs (bags) (Item 1).

6. Carefully raise cab for enough clearance to remove air springs (bags) (Item 1) as follows.

7. Use a suitable jack placed on frame rail flange and back of cab floor frame (Figure 106) (See Figure 106, page 148).

8. Once the jack is positioned properly, carefully raise cab for enough clearance to lift bottom threaded stud of both air springs (bags) (Item 1) from suspension crossmember bracket (Item 30).

> **CAUTION – Over-raising of cab may cause component damage.**

9. Once the cab has been raised, screw air spring (bag) (Item 1) off threaded stud on left cab mount plate (Item 22), then slide air spring (bag) from between left cab mount plate and suspension crossmember bracket (Item 30).

10. Once the cab has been raised, screw air spring (bag) (Item 1) off threaded stud on right cab mount plate (Item 23), then slide air spring (bag) from between right cab mount plate and suspension crossmember bracket (Item 30).

Remove Lateral Control Rod

Refer to Figure 120 (See Figure 120, page 187) for Items in parentheses.

1. Remove lateral control rod (Item 24) as follows.
   a. Remove hex head bolt (Item 15) and hex lock nut (Item 16) from mounting bracket of suspension crossmember bracket (Item 30) and lateral control rod (Item 24).
   b. Remove hex head bolt (Item 13) and hex lock nut (Item 14) from cab mount plate (Item 22) and lateral control rod (Item 24) and remove lateral control rod.

4.48. CAB AIR SUSPENSION SYSTEM FOR 5000*i* SERIES AFTER FEBRUARY 2001

> **WARNING – For safety purposes cab air suspension must be supplied from a pressure protected air supply.**

Refer to Figure 122 (See Figure 122, page 193) for Items in parentheses.

The cab air suspension system for the 5000*i* Series after February 2001 contains two air springs (bags) (Item 1), two shock absorbers (Item 2), and is controlled by the height control valve (Item 3). The air suspension assembly (Figure 122) (See Figure 122, page 193) needs no lubrication and very little maintenance.

The following components - air lines (to air spring) (Item 4), elbow fittings (Item 6), tee fitting (Item 7), air springs (bags) (Item 1), height control valve (Item 3), shock absorbers (Item 2) and lateral control arm (Item 24) - should be checked at the time the vehicle is being serviced. Immediate corrective action should be taken if a malfunction occurs.

NOTE – The height control valve (Item 3), air springs (bags) (Item 1) and shock absorbers (Item 2) are serviceable and can be replaced individually.

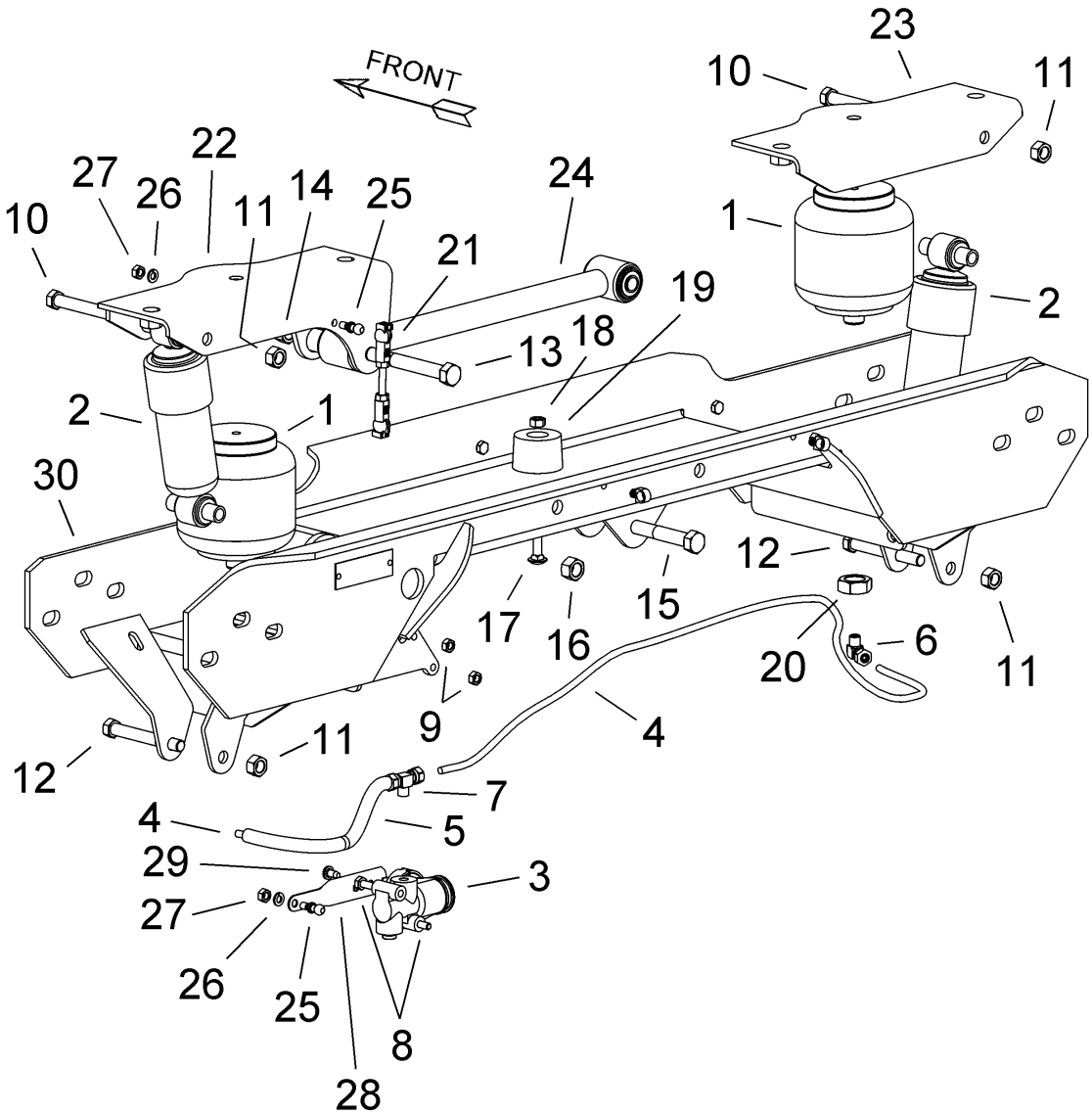

Figure 122 Cab Air Suspension System for 5000*i* Series after February 2001

1. AIR SPRING (BAG)
2. SHOCK ABSORBER
3. HEIGHT CONTROL VALVE
4. AIR LINE (TO AIR SPRING), 1/4
5. CORRUGATED LOOM, 1/4 X 6.88
6. PUSH TO CONNECT ELBOW FITTING, 45°, 1/4 TB, 1/8 M–NPT
7. PUSH TO CONNECT TEE FITTING, 1/4 TB, 1/8 M–NPT
8. HEX HEAD BOLT, 1/4–20 UNC X 1 3/4
9. HEX LOCK NUT, 1/4 UNC
10. HEX HEAD BOLT, 7/16 UNF X 4
11. HEX LOCK NUT, 7/16 UNF
12. HEX HEAD BOLT, 7/16 UNF X 3 1/2
13. HEX HEAD BOLT, 1/12 UNF X 4
14. HEX LOCK NUT, 1/2 UNF
15. HEX HEAD BOLT, 1/12 UNF X 3
16. HEX LOCK NUT, 1/2 UNF
17. CARRIAGE BOLT, 5/16–18 UNC X 1
18. HEX LOCK NUT, 5/16 UNC
19. RUBBER BUMPER
20. JAM NUT, 3/4 UNF
21. HEIGHT CONTROL VALVE LINKAGE
22. CAB MOUNT PLATE (LEFT)
23. CAB MOUNT PLATE (RIGHT)
24. LATERAL CONTROL ARM
25. THREADED BALL PIVOT
26. LOCK WASHER, 1/4
27. HEX NUT, 1/4 UNC
28. HEIGHT CONTROL VALVE LEVER
29. PAN HEAD BEARING SCREW 1/4–15 X 1/2
30. SUSPENSION CROSSMEMBER BRACKET

Periodically check tightness of all fasteners and air line fitting connections. Refer to the **TORQUE CHART** for (Figure 122) (See Figure 122, page 193) for proper tightening of all fasteners and air line fitting connections.

Remove Height Control Valve

NOTE – If there is an attempt to disassemble or adjust fittings on the height control valve (Item 3, Figure 122) (See Figure 122, page 193), it will void the warranty. Contact the air suspension manufacturer for assistance.

1. Drain air from air system.

WARNING – To avoid personal injury, whenever any component is serviced or removed from air system, be sure to set parking brake and/or block vehicle wheels to prevent it from moving while service is being performed.

Refer to Figure 121 (See Figure 121, page 190) for Items in parentheses.

2. Press and hold release button against fitting body and pull air line (supply) (Item 1) from “SUPPLY” port of height control valve (Item 3).

3. Loosen compression nut (Item 4) of push to connect tee fitting (Item 12) in “SUSP” port of height control valve (Item 3) and pull air line (to air spring) (Item 2) from push to connect tee fitting.

4. Loosen other compression nut (Item 4) of push to connect tee fitting (Item 12) in “SUSP” port of height control valve (Item 3) and pull air line (to air spring) (Item 2) from push to connect tee fitting.

5. Remove height control valve linkage (Item 5) from threaded ball pivot (Item 25, Figure 122) (See Figure 122, page 193) by unlatching linkage clip and carefully pry the height control valve linkage socket from threaded ball pivot on height control valve lever (Item 6).

Refer to Figure 122 (See Figure 122, page 193) for Items in parentheses.

6. Remove two hex head bolts and hex lock nuts (Items 8 and 9) and remove height control valve (Item 3) from suspension crossmember bracket (Item 30).

Remove Cab Air Suspension Shock Absorber

Refer to Figure 122 (See Figure 122, page 193) for Items in parentheses.

NOTE – Shock Absorber mounting bolts (Item 10 and 12) are reversed so that they are installed from the front instead of from the rear of the air suspension system on vehicles built after February 2001.

1. Remove hex head bolt and hex lock nut (Items 10 and 11) at the left cab mount plate (Item 22) at the top of shock absorber (Item 2).

2. Remove hex head bolt and hex lock nut (Items 12 and 11) at the mounting bracket of suspension crossmember bracket (Item 30) at the bottom of shock absorber (Item 2).

3. Remove shock absorber (Item 2) from between left cab mount plate (Item 22) and suspension crossmember bracket (Item 30).

4. Remove hex head bolt and hex lock nut (Items 10 and 11) at the right cab mount plate (Item 23) at the top of shock absorber (Item 2).

5. Remove hex head bolt and hex lock nut (Items 12 and 11) at the mounting bracket of suspension crossmember bracket (Item 30) at the bottom of shock absorber (Item 2).

6. Remove shock absorber (Item 2) from between right cab mount plate (Item 23) and suspension crossmember bracket (Item 30).

Remove Cab Air Suspension Air Spring (Bag)

1. Drain air from air system.

> **WARNING – To avoid personal injury, whenever any component is serviced or removed from air system, be sure air system is drained and be sure to set parking brake and/or block vehicle wheels to prevent it from moving while service is being performed.**

Refer to Figure 122 (See Figure 122, page 193) for Items in parentheses.

2. Loosen compression nut of push to connect elbow fitting (Item 6) and pull air line (to air spring) (Item 4) from push to connect elbow fitting at the bottom of driver side air spring (bag) (Item 1).

3. Loosen compression nut of push to connect elbow fitting (Item 6) and pull air line (to air spring) (Item 4) from push to connect elbow fitting at the bottom of passenger side air spring (bag) (Item 1).

4. Press and hold release button against fitting body and pull push to connect elbow fitting (Item 6) from both air springs (bags) (Item 1).

5. Remove jam nuts (Item 20) from the threaded stud at the bottom of both air springs (bags) (Item 1).

6. Carefully raise cab for enough clearance to remove air springs (bags) (Item 1) as follows.

7. Use a suitable jack placed on frame rail flange and back of cab floor frame (Figure 106) (See Figure 106, page 148).

8. Once the jack is positioned properly, carefully raise cab for enough clearance to lift bottom threaded stud of both air springs (bags) (Item 1) from suspension crossmember bracket (Item 30).

> **CAUTION – Over-raising of cab may cause component damage.**

9. Once the cab has been raised, screw air spring (bag) (Item 1) off threaded stud on left cab mount plate (Item 22), then slide air spring (bag) from between left cab mount plate and suspension crossmember bracket (Item 30).

10. Once the cab has been raised, screw air spring (bag) (Item 1) off threaded stud on right cab mount plate (Item 23), then slide air spring (bag) from between right cab mount plate and suspension crossmember bracket (Item 30).

Remove Lateral Control Rod

Refer to Figure 122 (See Figure 122, page 193) for Items in parentheses.

1. Remove lateral control rod (Item 24) as follows.
   a. Remove hex head bolt (Item 15) and hex lock nut (Item 16) from mounting bracket of suspension crossmember bracket (Item 30) and lateral control rod (Item 24).
   b. Remove hex head bolt (Item 13) and hex lock nut (Item 14) from cab mount plate (Item 22) and lateral control rod (Item 24) and remove lateral control rod.

5. INSTALL

5.1. ONE PIECE ENCAPSULATED WINDSHIELD

There are two types of urethane adhesive that may be used to install encapsulated windshields on the vehicles covered in this service manual.

It is recommended to use the two part U216 urethane adhesive that comes in the Essex® windshield installation kit (Figure 123) (See Figure 123, page 198). The use of this urethane adhesive allows for a 30 minute drive away time for the customer.

An optional one part U400HV urethane adhesive may be used when installing encapsulated windshields, but the cure time is based on time, temperature and humidity and the cure table for U400HV urethane adhesive. This requires a much longer drive away time for the customer.

Install One Piece Encapsulated Windshield using Two Part U216 Urethane Adhesive (adhesive A and curative B)

Refer to Figure 4 (See Figure 4, page 5) for Items in parentheses.

The 5000*i* Series and 9000*i* Series vehicles come standard with a one piece encapsulated windshield (Item 1). A two piece encapsulated windshield (Item 2) is available as an option.

IMPORTANT – To install a one piece encapsulated windshield you will need to have the INTERNATIONAL® Bonded Windshield Tool Kit ZTSE4470. This kit has a tool box that includes the tools required to remove and install bonded windshields. To order, call toll free in U. S. and Canada 1–800–520–2584 or Fax 1–800–578–7375. **NOTE** — The INTERNATIONAL® Bonded Windshield Tool Kit ZTSE4470 is no longer available through the INTERNATIONAL® tool supplier. For materials that are available contact INTERNATIONAL® service parts.

To install a one piece encapsulated windshield, you will also need the Essex® windshield installation kit (Figure 123) (See Figure 123, page 198). The kit includes:

- U413 windshield fence primer
- U401 windshield glass prep
- U402 windshield glass primer
- U216 adhesive (two tubes, adhesive A and curative B)
- Application mixing head
- Applicator nozzle

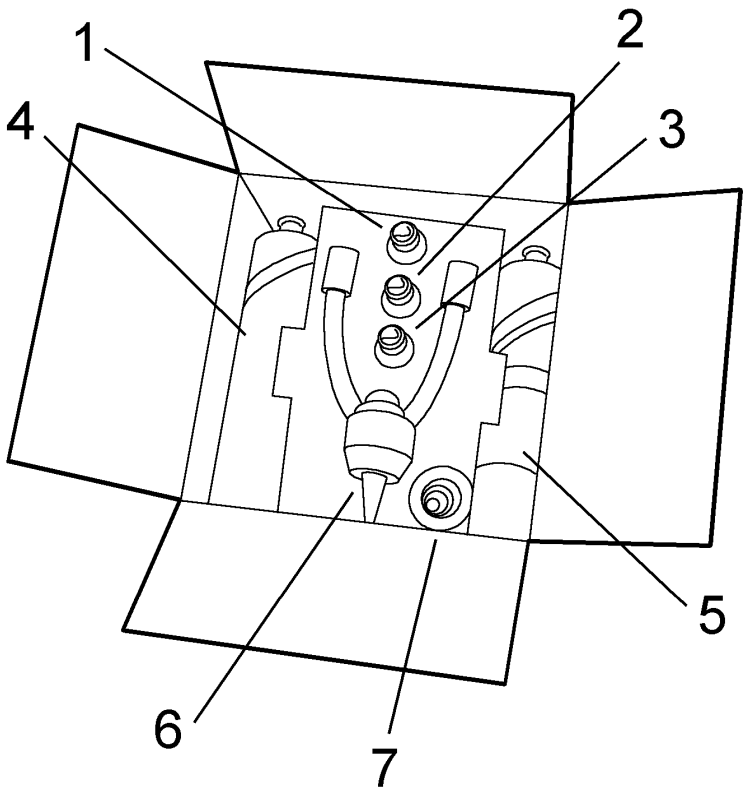

Figure 123 Essex® Windshield Installation Kit

1. U413 WINDSHIELD FENCE PRIMER
2. U401 WINDSHIELD GLASS PREP
3. U402 WINDSHIELD GLASS PRIMER
4. U216–ADHESIVE A TUBE
5. U216–CURATIVE B TUBE
6. APPLICATION MIXING HEAD
7. APPLICATOR NOZZLE

These materials must be used on or before expiration date marked on container. U413 windshield Fence Primer, U401 windshield Glass Prep and U402 windshield Glass Primer have a 6 month shelf life. U400HV Urethane adhesive tube has a 9 month shelf life.

In addition to the items supplied in the Essex® windshield installation kit above (Figure 123) (See Figure 123, page 198), you will need the following materials:

- Essex® GC800 glass cleaner
- White or brown paper towels
- Applicator nozzles supplied by Essex® to puncture U216 adhesive (two tubes, adhesive A and curative B)

NOTE – For the windshield, use only laminated safety glass (AS–1 per ANSI Z26.1–Latest revision) and International TMS–9522 (SAE J1203).

WARNING – To avoid personal injury, wear protective work gloves when handling the windshield. Also wear appropriate protective gloves when using any of the Betaseal system chemicals from the Essex® windshield installation kit.

NOTE – Before installing new windshield, wipe off any water remaining around windshield fence and surrounding cab area with a lint free cloth.

1. Dry fit new windshield on vehicle to make sure the windshield fits windshield opening properly before applying U216 adhesive. Once the windshield is positioned properly in the windshield opening place a piece of tape as a reference mark across the center upper portion of windshield and cab. Use a utility knife and cut the tape between the cab and windshield.

2. Remove new windshield from vehicle and place it on a suitable padded work stand to prepare it for installation.

Refer to Figure 124 for Items in parentheses.

3. Remove urethane adhesive (Item 1) from windshield fence (Item 2) around windshield opening with a gasket chisel (Item 3). A thin layer of old urethane adhesive of 2 to 3 mm thick (Item 4) may be left on windshield fence. Try to keep a consistent thickness of old urethane adhesive around the perimeter of the windshield fence.

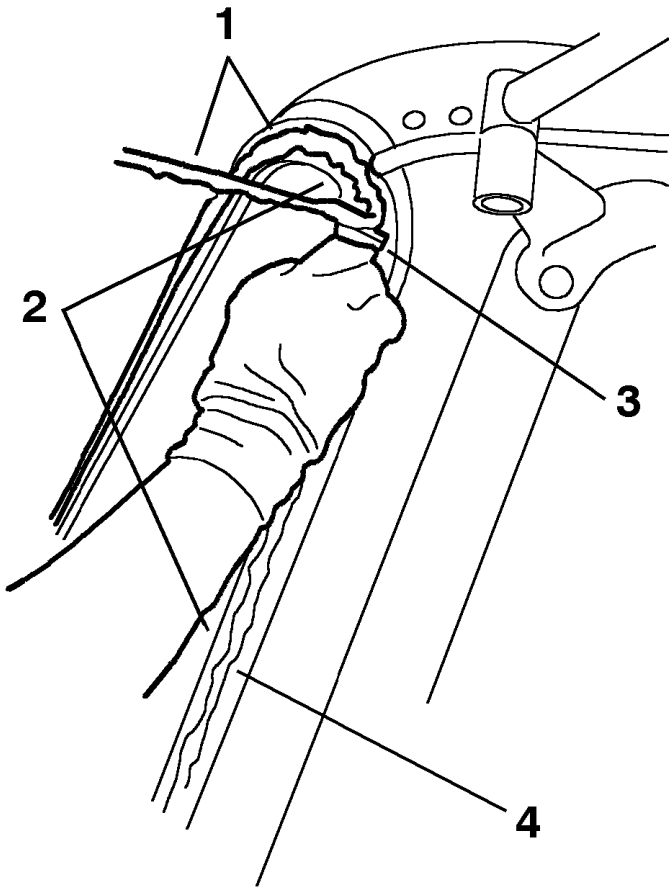

Figure 124 Removing Urethane Adhesive from Windshield Fence

1. URETHANE ADHESIVE
2. WINDSHIELD FENCE
3. GASKET CHISEL
4. OLD URETHANE ADHESIVE (2 TO 3 MM THICK ALLOWED)

Refer to Figure 125 for Items in parentheses.

4. Clean dirt and any water left from spraying around windshield during removal off windshield fence (Item 1) with a brush or clean, lint free cloth (Item 2) before installing new windshield.

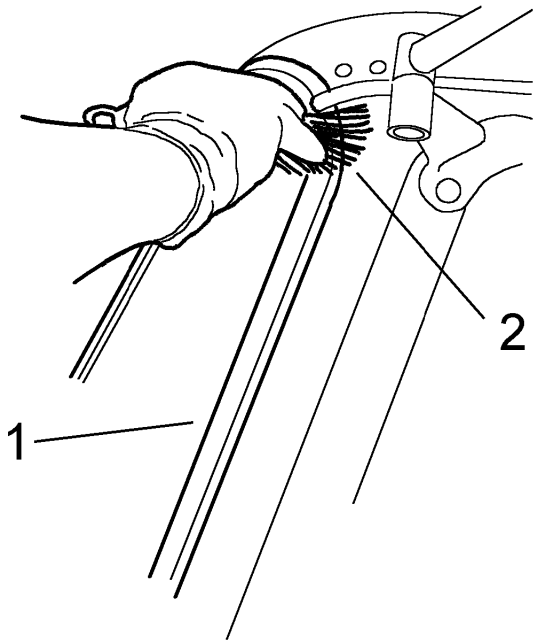

Figure 125 Cleaning Windshield Fence

1. WINDSHIELD FENCE
2. BRUSH

Refer to Figure 126 for Items in parentheses unless otherwise noted.

5. Take U413 windshield fence primer (Item 1, Figure 123) (See Figure 123, page 198) from Essex® windshield installation kit. Shake U413 windshield fence primer (Item 1) for at least one minute. Remove cover (Item 2) from container.

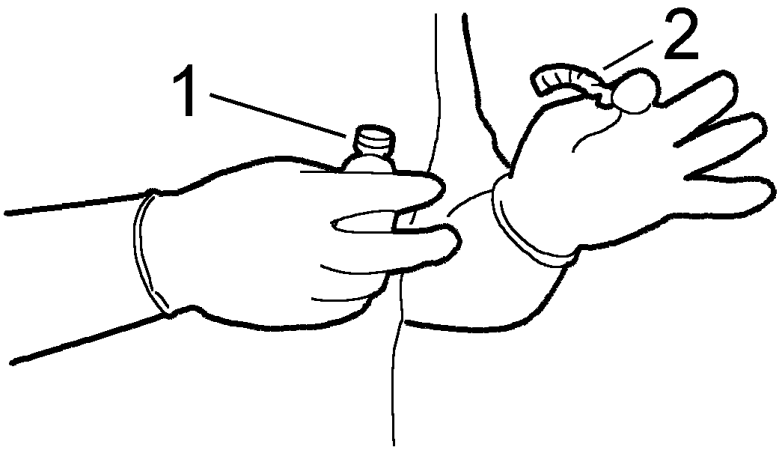

Figure 126 Preparation of U413 Windshield Fence Primer, Windshield Glass Prep or Windshield Glass Primer

1. U413 WINDSHIELD FENCE PRIMER, U401 WINDSHIELD GLASS PREP OR U402 WINDSHIELD GLASS PRIMER
2. COVER

Refer to Figure 127 for Items in parentheses.

6. Apply U413 windshield fence primer (Item 1) with a clean, dry applicator (Item 2) to cover scratches and bare metal on windshield fence (Item 3). DO NOT apply U413 windshield fence primer over old urethane adhesive left on windshield fence.

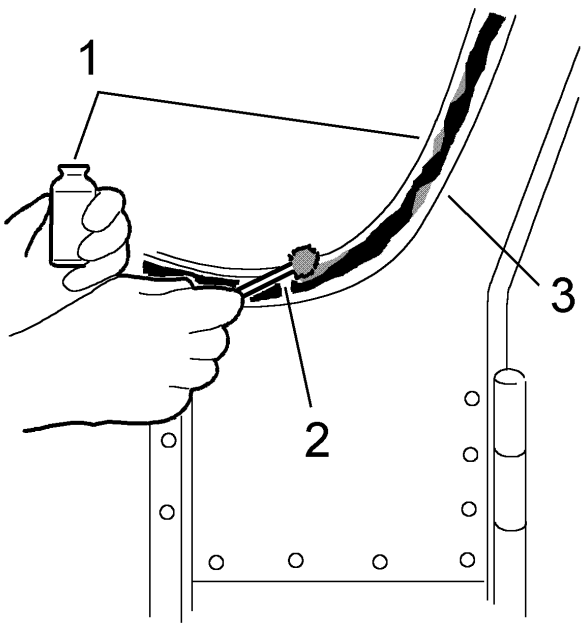

Figure 127 Applying U413 Windshield Fence Primer to Windshield Fence

1. U413 WINDSHIELD FENCE PRIMER
2. APPLICATOR
3. WINDSHIELD FENCE

7. Allow U413 windshield fence primer to dry for 6 to 10 minutes minimum after application.

8. With new windshield on a padded work stand, prepare windshield for installation as follows:

9. Using a razor blade if necessary and plastic scrubbing pad remove any windshield encapsulation flash from bonding surface of new windshield. Clean new windshield thoroughly with Essex® glass cleaner GC800 (Figure 128). Dry thoroughly with paper towels. Make sure windshield is completely clean and dry before proceeding.

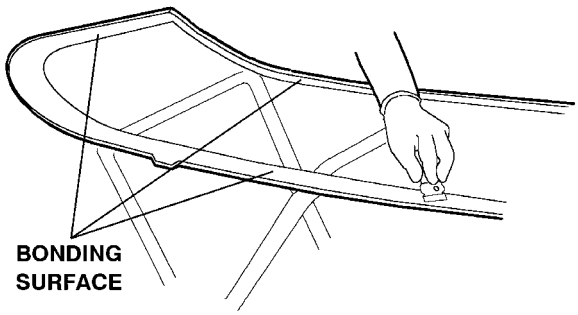

Figure 128 Cleaning Windshield for U401 Windshield Glass Prep, U402 Windshield Glass Primer and U216 Adhesive Application

Refer to Figure 126 (See Figure 126, page 202) for Items in parentheses unless otherwise noted.

10. Once new windshield has been cleaned, take U401 windshield glass prep (Item 2, Figure 123) (See Figure 123, page 198) from Essex® windshield installation kit. Shake U401 windshield glass prep (Item 1) for at least one minute. Remove cover (Item 2) from container.

NOTE – Read completely through Step 11 below to ensure the correct application and removal of the windshield glass prep U401.

Refer to Figure 129 for Items in parentheses.

11. Apply U401 windshield glass prep (Item 1) with a clean, dry applicator (Item 2) to bonding surface only on new windshield (Item 3). If applied to clear glass surface, glass will haze. Immediately wipe windshield glass prep off by following eight to ten inches behind the applicator with a white or brown paper towel. DO NOT use a cloth shop towel. After completing first application of windshield glass prep, repeat windshield glass prep application and removal process. This is a clear liquid.

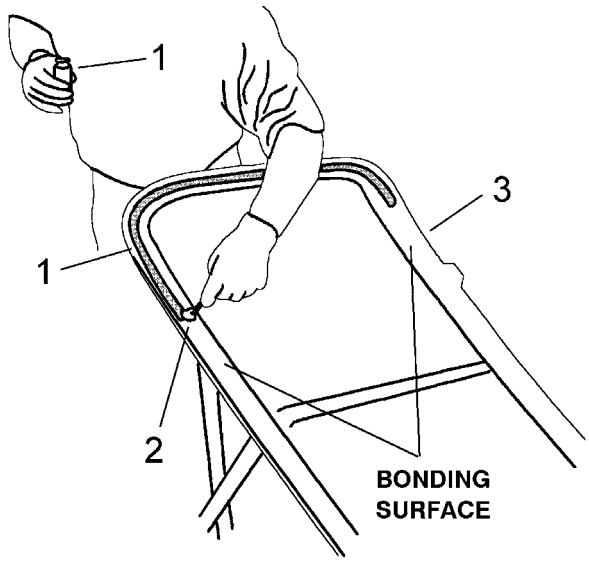

Figure 129 Application of U401 Windshield Glass Prep to Windshield

1. U401 WINDSHIELD GLASS PREP
2. APPLICATOR
3. NEW WINDSHIELD

Refer to Figure 126 (See Figure 126, page 202) for Items in parentheses unless otherwise noted.

12. Once U401 windshield glass prep has been applied and wiped off new windshield, take U402 windshield glass primer (Item 3, Figure 123) (See Figure 123, page 198) from Essex® windshield installation kit. Shake U402 windshield glass primer (Item 1) for at least one minute. Remove cover (Item 2) from container.

Refer to Figure 130 for Items in parentheses.

13. Apply U402 windshield glass primer (Item 1) with a clean, dry applicator (Item 2) to bonding surface on new windshield (Item 3).

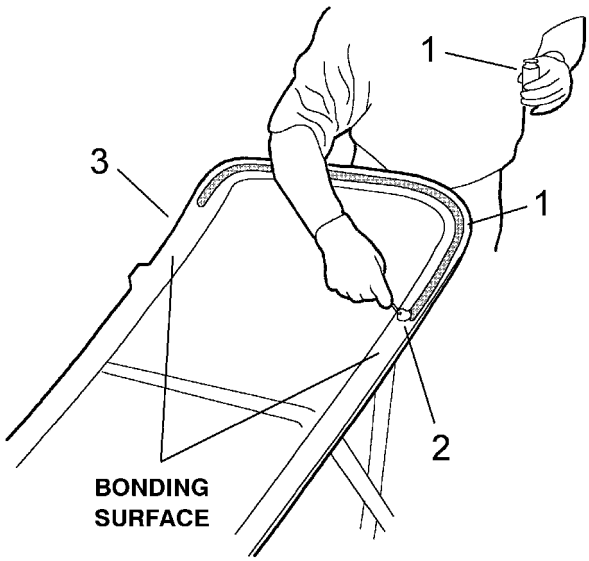

Figure 130 Application of U402 Windshield Glass Primer to Windshield

1. U402 WINDSHIELD GLASS PRIMER
2. APPLICATOR
3. NEW WINDSHIELD

14. Allow U402 windshield glass primer to dry to a tack free condition for 6 to 10 minutes minimum after application.

CAUTION – Once the windshield has been primed, ensure there is no contact with bonding surface as oil from skin will affect bonding performance. If the windshield is not bonded properly the cab strength and safety would be compromised. If contact with bonding surface has occurred repeat the cleaning process and reapply U402 windshield glass primer and allow it to dry for 6 to 10 minutes before applying U216 adhesive.

15. Remove Essex® U216 adhesive (two tubes, adhesive A and curative B) (Items 4 and 5, Figure 123) (See Figure 123, page 198) from Essex® windshield installation kit.

Refer to Figure 131 for Items in parentheses.

16. Using the pull tab or a screwdriver (Item 1) if pull tab not supplied, pry out bottom cover (Item 2) from both adhesive A and curative B adhesive tubes (Item 3).

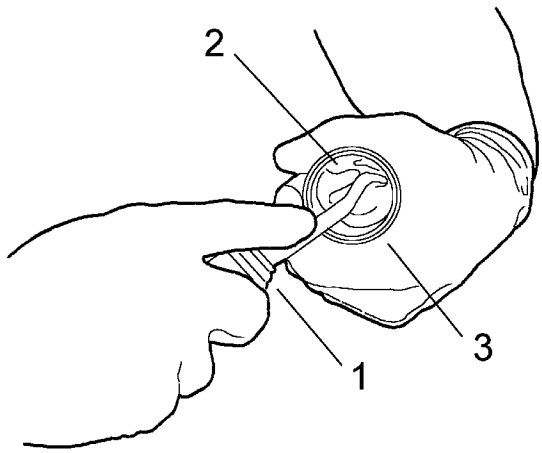

REMOVING BOTTOM COVER

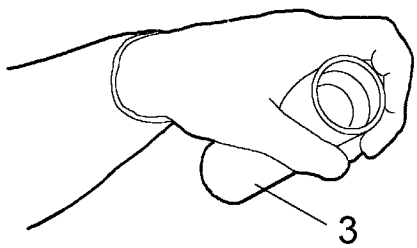

BOTTOM COVER REMOVED

Figure 131 Removing Bottom Cover from Adhesive Tubes

1. SCREWDRIVER
2. BOTTOM COVER
3. ADHESIVE TUBE

Refer to Figure 132 for Items in parentheses unless otherwise noted.

17. Use one applicator nozzle (Item 1) supplied separately by Essex® to puncture adhesive A tube (Item 2). Use the other applicator nozzle (Item 1) supplied separately by Essex® to puncture curative B tube (Item 2). DO NOT use the same applicator nozzle to puncture both tubes; this keeps from contaminating the other tube before installing application mixing head (Item 6, Figure 123) (See Figure 123, page 198). Be sure to push applicator nozzle all the way in to ensure adhesive tubes are fully opened.

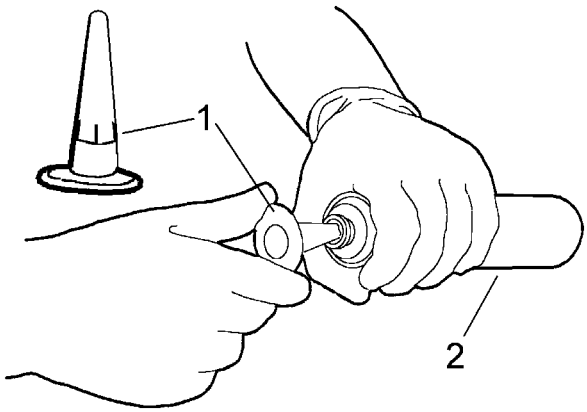

Figure 132 Puncturing Adhesive Tubes

1. APPLICATOR NOZZLE
2. ADHESIVE A TUBE OR CURATIVE B TUBE OR U400HV ADHESIVE TUBE

18. Once both adhesive A and curative B adhesive tubes (Item 2) have been prepared for use, remove application mixing head (Item 6, Figure 123) (See Figure 123, page 198) from Essex® windshield installation kit.

Refer to Figure 133 for Items in parentheses.

19. Install both adhesive A and curative B adhesive tubes (Item 1) on application mixing head (Item 2).

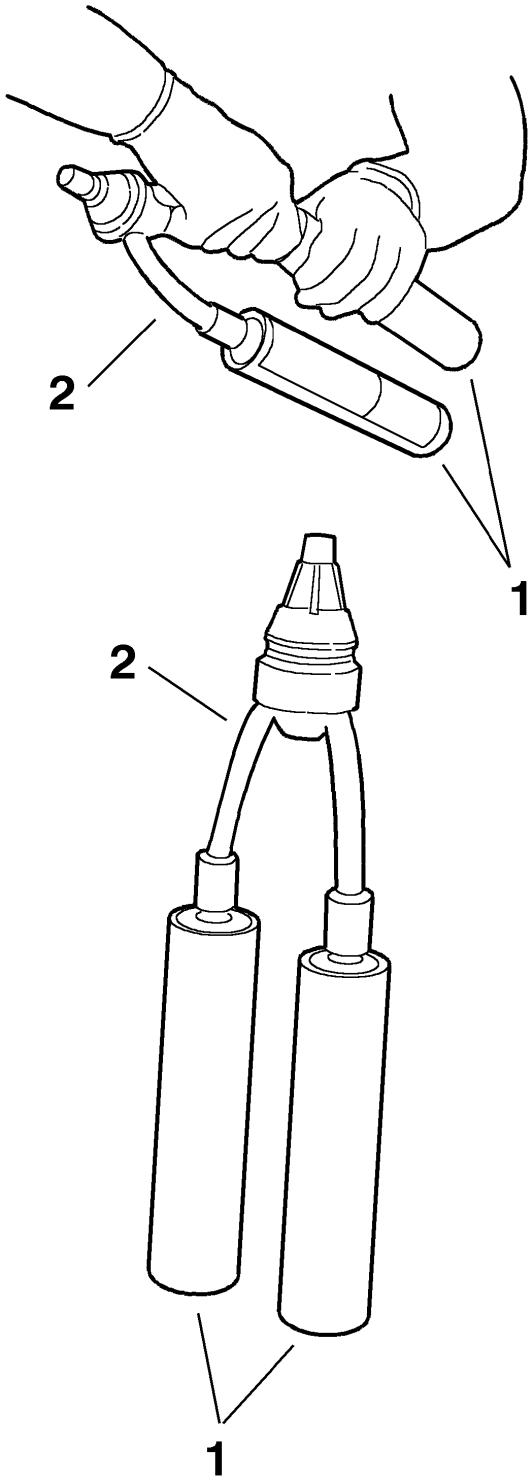

Figure 133 Installing both Adhesive Tubes to Mixing Head

1. ADHESIVE A AND CURATIVE B ADHESIVE TUBES
2. APPLICATION MIXING HEAD

Refer to Figure 134 for Items in parentheses unless otherwise noted.

20. Once both adhesive A and curative B adhesive tubes (Item 1) are installed on application mixing head (Item 2), remove applicator nozzle (Item 7, Figure 123) (See Figure 123, page 198) from Essex® windshield installation kit. Install applicator nozzle (Item 3) on application mixing head (Item 2). Cut tab (Item 4) off applicator nozzle. Measure and mark a 3/8 inch wide by 5/8 inch long with a 1/8 inch wide dimension at the base of the new notch (Item 5) to replace the current V-notch on the applicator nozzle. Use a utility knife and cut out new notch to allow for proper adhesive application.

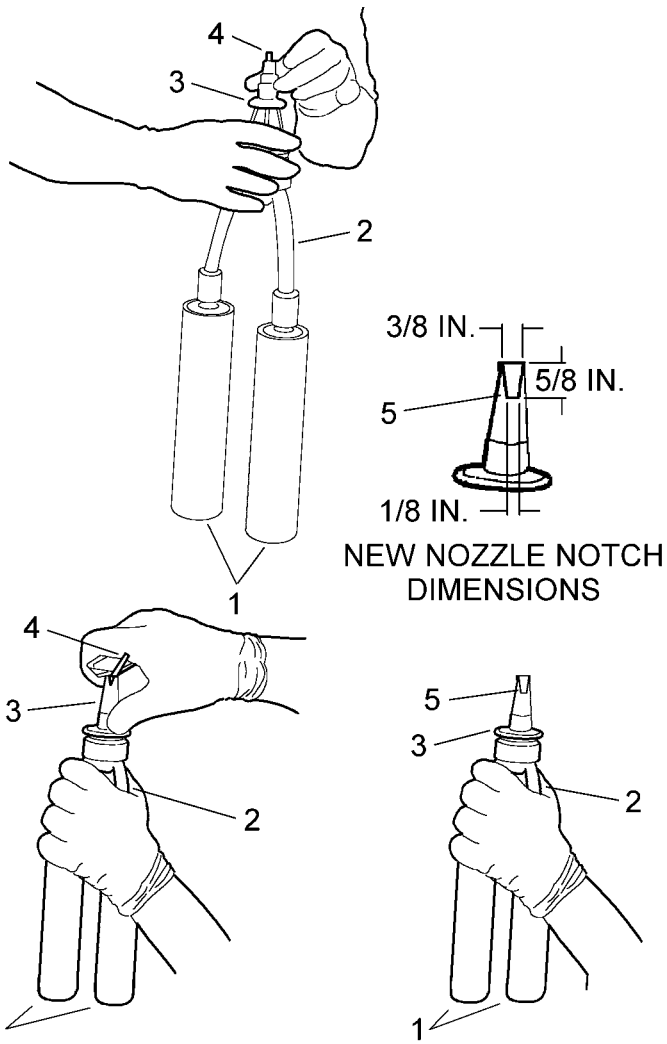

Figure 134 Installing Applicator Nozzle on Mixing Head and Cutting Tab Off

1. ADHESIVE A AND CURATIVE B ADHESIVE TUBES
2. APPLICATION MIXING HEAD
3. APPLICATOR NOZZLE
4. CUT TAB OFF APPLICATOR NOZZLE
5. CUT 3/8 INCH WIDE AND 5/8 INCH LONG NOTCH INTO APPLICATOR NOZZLE

Refer to Figure 135 for Items in parentheses.

21. Before loading adhesive tubes with application mixing head and applicator nozzle (Item 1) into betagun (Item 2), pull trigger and run plungers (Item 3) all the way back to allow for adhesive tubes to be loaded. Open front cover (Item 4) on betagun and install adhesive tubes with application mixing head and applicator nozzle into betagun.

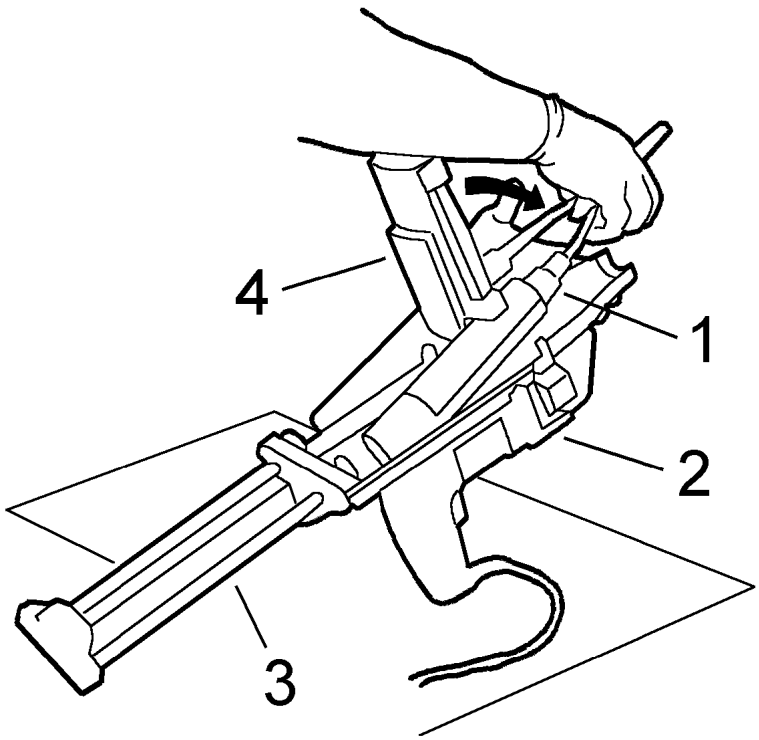

Figure 135 Loading Adhesive into Betagun

1. ADHESIVE TUBES WITH APPLICATION MIXING HEAD AND APPLICATOR NOZZLE
2. BETAGUN
3. PLUNGERS
4. FRONT COVER

Refer to Figure 136 for Items in parentheses.

22. Once adhesive tubes with application mixing head and applicator nozzle (Item 1) have been installed into betagun (Item 2), close front cover (Item 3). Run plungers (Item 4) forward on betagun until plungers are in position to apply adhesive. Stop when adhesive reaches applicator nozzle.

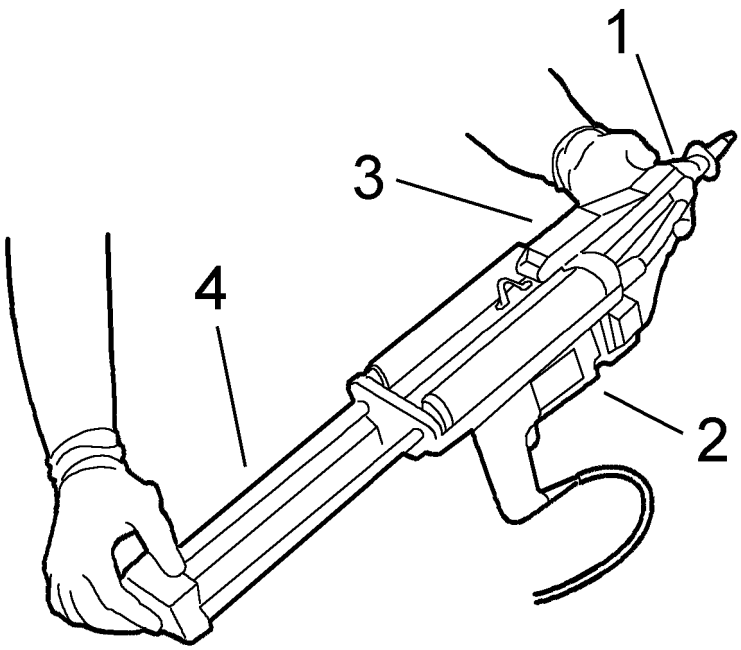

Figure 136 Running Plungers Forward on Betagun

1. ADHESIVE TUBES WITH APPLICATION MIXING HEAD AND APPLICATOR NOZZLE
2. BETAGUN
3. FRONT COVER
4. PLUNGERS

NOTE – Application of adhesive bead on new windshield shall be 0 to 2 mm from encapsulation edge and be at least 5/8 to 3/4 inch (15 to 20 mm) high and 3/8 to 1/2 inch (8 to 12 mm) wide maximum.

IMPORTANT – If U216 two part adhesive runs out before getting all the way around the windshield, it is acceptable to fill in the gap left (6 inches or less) with U400HV one part urethane adhesive using a standard cocking gun. It is recommended that because of the short time frame in which to install the windshield to have a tube of U400HV one part urethane adhesive loaded into a cocking gun and ready to use so the time will not run out to get the windshield installed onto the vehicle.

Refer to Figure 137 for Items in parentheses.

23. Hold betagun (Item 1) with applicator nozzle (Item 2) as close to a 90 degree angle as possible and start at the International logo on lower driver side corner. Pull trigger to apply a uniform bead of adhesive (Item 3) going across the bottom all the way around windshield. The harder you pull the trigger the faster the adhesive will extrude. Use this variable speed control to slow down as you apply adhesive around the corners. Overlap adhesive at the seam slightly, and use a plastic or wood tongue depressor (Item 4) to smooth or even out adhesive as required before installing windshield.

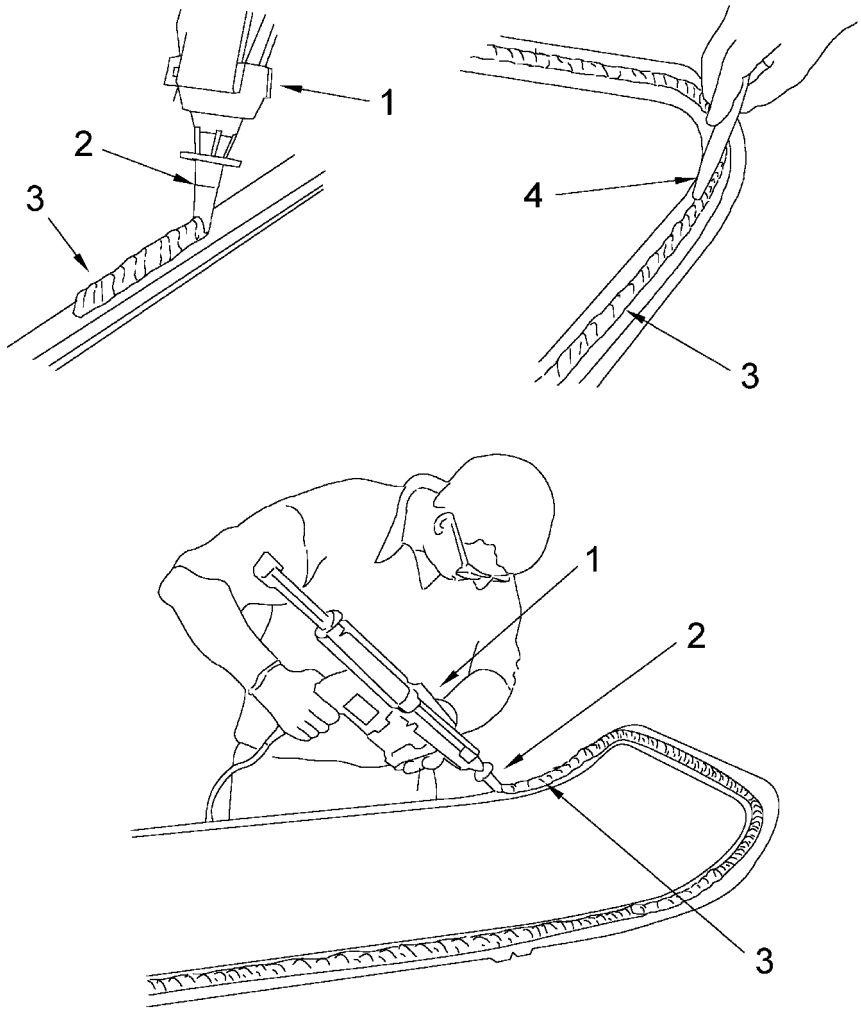

Figure 137 Using Betagun to Apply Adhesive

1. BETAGUN
2. APPLICATOR NOZZLE
3. ADHESIVE
4. PLASTIC OR WOOD TONGUE DEPRESSOR

24. Once adhesive has been applied on windshield it MUST be installed within 5 to 7 minutes maximum. Adhesive starts curing immediately and will not provide an adequate bond if not installed within the 5 to 7 minute time frame.

25. With the aid of an assistant install windshield (Figure 138) as follows:

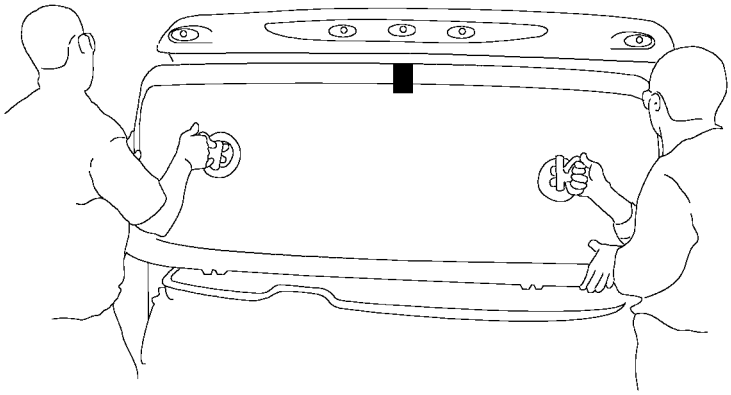

Figure 138 Installing Windshield

Refer to Figure 139 for Items in parentheses.

26. If the vehicle has a sun shade (Item 1), position new windshield (Item 2) under sun shade being careful not to touch windshield on cab. Align tape mark (Item 3) on windshield with tape mark on top of cab and align windshield locator tabs (Item 4) on new windshield with cab locator darts (Item 5) at the bottom of windshield opening on cab.

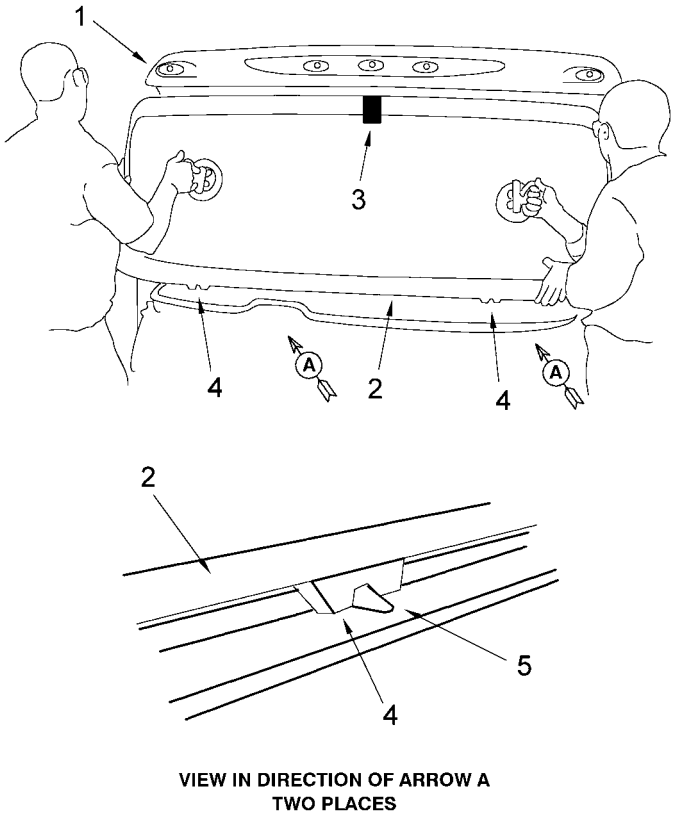

Figure 139 Positioning Windshield Locator Tabs on Cab Locator Darts

1. SUN SHADE
2. NEW WINDSHIELD
3. TAPE MARK
4. WINDSHIELD LOCATOR TAB
5. CAB LOCATOR DARTS

Refer to Figure 140 for Items in parentheses unless otherwise noted.

27. On vehicles without a sun shade, align the piece of tape (Item 1) at the top of the windshield with tape (Item 2) above windshield opening on the cab, then position windshield locator tabs (Item 3) on cab locator darts (Item 4). While holding windshield locator tabs in place on cab locator darts, push windshield (Item 5) back against windshield fence (Item 6). Check windshield encapsulation rubber trim (Item 7) to make sure it is positioned properly around windshield opening.

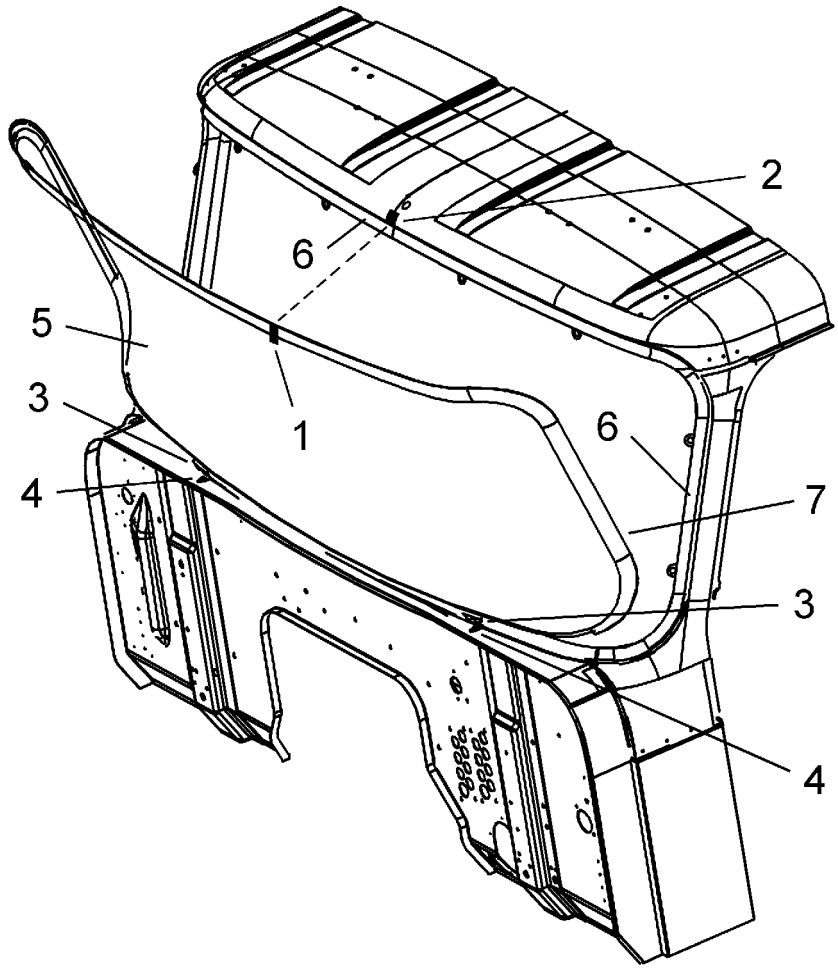

Figure 140 Pushing Windshield into Place

1. TAPE AT TOP OF WINDSHIELD
2. TAPE ABOVE WINDSHIELD OPENING ON CAB
3. WINDSHIELD LOCATOR TAB
4. CAB LOCATOR DARTS
5. WINDSHIELD
6. WINDSHIELD FENCE
7. WINDSHIELD ENCAPSULATION RUBBER TRIM

28. With the aid of an assistant, gently push on windshield all around outer edge to set it properly against windshield fence (Figure 141). There are tabs built into the windshield to keep it from being pushed in too far.

29. Remove both pieces of tape (Items 1 and 2) from windshield and cab.

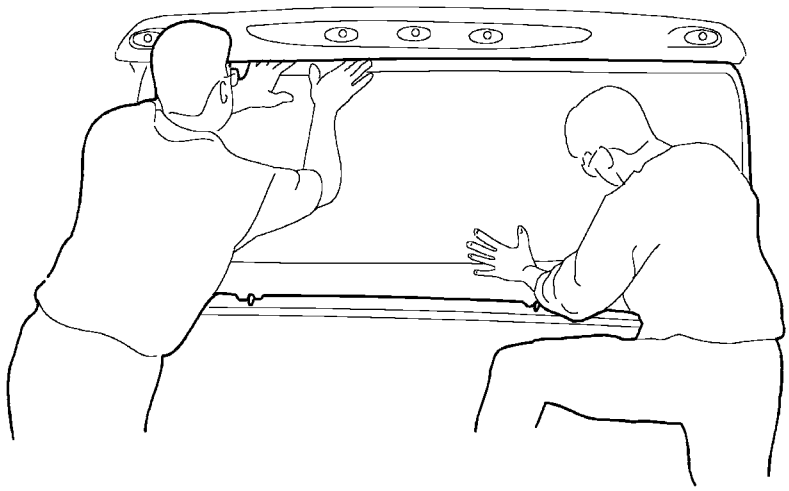

Figure 141 Pushing Windshield Back Against Windshield Fence

Refer to Figure 5 (See Figure 5, page 6) for Items in parentheses.

30. If the unit is equipped with an exterior sun shade (Item 1) remove piece of tape (Item 2) from bottom side of each sun shade mounting bracket (Item 3) used to protect sun shade mounting bracket paint while cutting out windshield. If sun shade was removed, reinstall sun shade. Refer to **SUN SHADE** (See Install SUN SHADE, page 247)**, Install Sun Shade for 5000*i* or 9000*i* Series** as required.

31. Position both defroster duct cover panels (Item 2, Figure 7) (See Figure 7, page 9) in place inside cab and install ten torx pan head screws (Item 1, Figure 7) (See Figure 7, page 9).

Refer to Figure 6 (See Figure 6, page 8) for all Items in parentheses unless otherwise noted.

32. Position driver side A pillar trim panel (Item 2) in place inside cab and install four torx self-drilling screws (Item 3). Reinstall four fastener covers (Item 1) on fasteners of A pillar trim panel.

33. Before installing passenger side A pillar (Item 5), install passenger side window demist duct with rubber tube (Item 8) in place and install two torx self-drilling screws (Item 7) to secure it.

34. Use a blunt tip screwdriver to pry the side cab trim panel out slightly to position the bottom of the passenger side A pillar trim panel (Item 5) in place behind it. Note that the bottom torx self-drilling screw (Item 6) goes through the inner side cab trim panel and passenger side A pillar trim panel. Position passenger side A pillar in place inside cab and install three torx self-drilling screws (Item 6) securing it to the cab. Reinstall fastener covers (Item 4) on two upper fasteners only on passenger side A pillar trim panel.

35. Once both defroster duct cover panels (Item 2, Figure 7) (See Figure 7, page 9), driver side A pillar trim panel (Item 2) and passenger side A pillar trim panel (Item 5) have been reinstalled inside the cab, turn the blower onto high speed to check that the defroster works properly and to blow out any debris that may have fallen into the ducts while removing the windshield. If any debris came out, wipe it away.

36. Reinstall windshield wiper arms and blades. Refer to **WINDSHIELD WIPER ARM AND BLADE ASSEMBLY** (See Install WINDSHIELD WIPER ARM AND BLADE ASSEMBLY, page 271)**, Install Windshield Wiper Arm and Blade Assembly**.

37. Test operation of windshield wipers and washer, then clean windshield and surrounding area.

38. Close hood and latch hood on both sides.

IMPORTANT – The quick curing time of U216 two part urethane adhesive allows the vehicle to be driven 30 minutes after completing windshield installation. If the vehicle is equipped with AIR BAGS, the U216 two part urethane adhesive should be allowed to cure for 60 minutes before driving. Even if U400HV one part urethane adhesive has to be used to fill in a gap of **6 inches or less** during the application of U216 two part urethane adhesive the cure time before the vehicle can be driven will be the same as above. **If more than 6 inches of U400HV one part urethane adhesive is used**, you will need to use the area on the Form Bonded Windshield Replacement Report (Figure 183) (See Figure 183, page 345) to record Time, Temperature and Humidity and follow the cure table for U400HV.

Install One Piece Encapsulated Windshield using One Part U400HV Urethane Adhesive

Although it is recommended to use the two part U216 urethane adhesive that comes in the Essex® windshield installation kit (Figure 123) (See Figure 123, page 198). The optional one part U400HV urethane adhesive may be used when installing a one piece encapsulated windshield.

Refer to Figure 4 (See Figure 4, page 5) for Items in parentheses.

The 5000*i* Series and 9000*i* Series vehicles come standard with a one piece encapsulated windshield (Item 1). A two piece encapsulated windshield (Item 2) is available as an option.

IMPORTANT – To install a one piece encapsulated windshield you will need to have the INTERNATIONAL® Bonded Windshield Tool Kit ZTSE4470. This kit has a tool box that includes the tools required to remove and install bonded windshields. To order, call toll free in U. S. and Canada 1–800–520–2584 or Fax 1–800–578–7375. **NOTE** — The INTERNATIONAL® Bonded Windshield Tool Kit ZTSE4470 is no longer available through the INTERNATIONAL® tool supplier. For materials that are available contact INTERNATIONAL® service parts.

To install a one piece encapsulated windshield, you will also need the following items.

- U413 window fence primer
- U401 window glass prep
- U402 window glass primer
- U400HV adhesive (one tube)
- Standard caulking gun

These materials must be used on or before expiration date marked on container. U413 windshield Fence Primer, U401 windshield Glass Prep and U402 windshield Glass Primer have a 6 month shelf life. U400HV Urethane adhesive tube has a 9 month shelf life.

IMPORTANT – When using U400HV one part urethane adhesive, you will need to use the area on the Form Bonded Windshield Replacement Report (Figure 181) (See Figure 181, page 341) to record Time, Temperature and Humidity and follow the cure table for U400HV. This is critical to when the vehicle can be driven after completing the windshield installation.

In addition to the items listed at the beginning of this section, you will need the following materials:

- Essex® GC800 glass cleaner
- White or brown paper towels

- Applicator nozzles supplied by Essex® to puncture UU400HV adhesive tube

NOTE – For the windshield, use only laminated safety glass (AS–1 per ANSI Z26.1–Latest revision) and International TMS–9522 (SAE J1203).

WARNING – To avoid personal injury, wear protective work gloves when handling the windshield. Also wear appropriate protective gloves when using any of the Betaseal system chemicals from Essex®.

NOTE – Before installing new windshield, wipe off any water remaining around windshield fence and surrounding cab area with a lint free cloth.

1. Dry fit new windshield on vehicle to make sure the windshield fits windshield opening properly before applying U400HV adhesive. Once the windshield is positioned properly in the windshield opening, place a piece of tape as a reference mark across the center upper portion of windshield and cab. Use a utility knife and cut the tape between the cab and windshield.

2. Remove new windshield from vehicle and place it on a suitable padded work stand to prepare it for installation.

Refer to Figure 124 (See Figure 124, page 200) for Items in parentheses.

3. Remove urethane adhesive (Item 1) from windshield fence (Item 2) around windshield opening with a gasket chisel (Item 3). A thin layer of old urethane adhesive of 2 to 3 mm thick (Item 4) may be left on windshield fence. Try to keep a consistent thickness of old urethane adhesive around the perimeter of the windshield fence.

Refer to Figure 125 (See Figure 125, page 201) for Items in parentheses.

4. Clean dirt and any water left from spraying around windshield during removal, off windshield fence (Item 1) with a brush or clean, lint free cloth (Item 2) before installing new windshield.

Refer to Figure 126 (See Figure 126, page 202) for Items in parentheses.

5. Take a bottle of U413 window fence primer from Essex®. Shake U413 Windshield fence primer (Item 1) for at least one minute. Remove cover (Item 2) from container.

Refer to Figure 127 (See Figure 127, page 202) for Items in parentheses.

6. Apply U413 windshield fence primer (Item 1) with a clean, dry applicator (Item 2) to cover scratches and bare metal on windshield fence (Item 3). DO NOT apply U413 Windshield fence primer over old urethane adhesive left on windshield fence.

7. Allow U413 windshield fence primer to dry for 6 to 10 minutes minimum after application.

8. With new windshield on a padded work stand, prepare windshield for installation as follows:

9. Using a razor blade if necessary, and plastic scrubbing pad, remove any windshield encapsulation flash from bonding surface of new windshield. Clean new windshield thoroughly with Essex® glass cleaner

GC800 (Figure 128) (See Figure 128, page 203). Dry thoroughly with paper towels. Make sure windshield is completely clean and dry before proceeding.

Refer to Figure 126 (See Figure 126, page 202) for Items in parentheses.

10. Once the new windshield has been cleaned, take U401 windshield glass prep from Essex®. Shake U401 windshield glass prep (Item 1) for at least one minute. Remove cover (Item 2) from container.

NOTE – Read completely through Step 11 below to ensure the correct application and removal of the windshield glass prep U401.

Refer to Figure 129 (See Figure 129, page 204) for Items in parentheses.

11. Apply U401 windshield glass prep (Item 1) with a clean, dry applicator (Item 2) to bonding surface only on new windshield (Item 3). If applied to clear glass surface, glass will haze. Immediately wipe windshield glass prep off by following eight to ten inches behind the applicator with a white or brown paper towel. DO NOT use a cloth shop towel. After completing first application of windshield glass prep, repeat windshield glass prep application and removal process. This is a clear liquid.

Refer to Figure 126 (See Figure 126, page 202) for Items in parentheses.

12. Once U401 windshield glass prep has been applied and wiped off new windshield, take U402 windshield glass primer from Essex®. Shake U402 windshield glass primer (Item 1) for at least one minute. Remove cover (Item 2) from container.

Refer to Figure 130 (See Figure 130, page 205) for Items in parentheses.

13. Apply U402 windshield glass primer (Item 1) with a clean, dry applicator (Item 2) to bonding surface on new windshield (Item 3).

14. Allow U402 windshield glass primer to dry to a tack free condition for 6 to 10 minutes minimum after application.

CAUTION – Once the windshield has been primed, ensure there is no contact with bonding surface as oil from skin will affect bonding performance. If the windshield is not bonded properly the cab strength and safety would be compromised. If contact with bonding surface has occurred, repeat the cleaning process and reapply U402 windshield glass primer and allow it to dry for 6 to 10 minutes before applying U400HV adhesive.

Refer to Figure 131 (See Figure 131, page 206) for Items in parentheses.

15. Using the pull tab or a screwdriver (Item 1), if pull tab not supplied, pry out bottom cover (Item 2) from U400HV urethane adhesive tube (Item 3).

Refer to Figure 132 (See Figure 132, page 207) for Items in parentheses.

16. Use applicator nozzle (Item 1) supplied by Essex® to puncture U400HV urethane adhesive tube (Item 2). Be sure to push applicator nozzle all the way in to ensure urethane adhesive tube is fully opened. Wipe off any adhesive from applicator nozzle before it can dry.

Refer to Figure 142 for Items in parentheses.

17. Once the U400HV urethane adhesive tube (Item 1) has been punctured. Install applicator nozzle (Item 2) on the U400HV urethane adhesive tube. Cut tab (Item 3) off applicator nozzle. Measure and mark a 3/8 inch wide by 5/8 inch long with a 1/8 inch wide dimension at the base of the new notch (Item 4) to replace the current V-notch on the applicator nozzle. Use a utility knife and cut out new notch to allow for proper adhesive application.

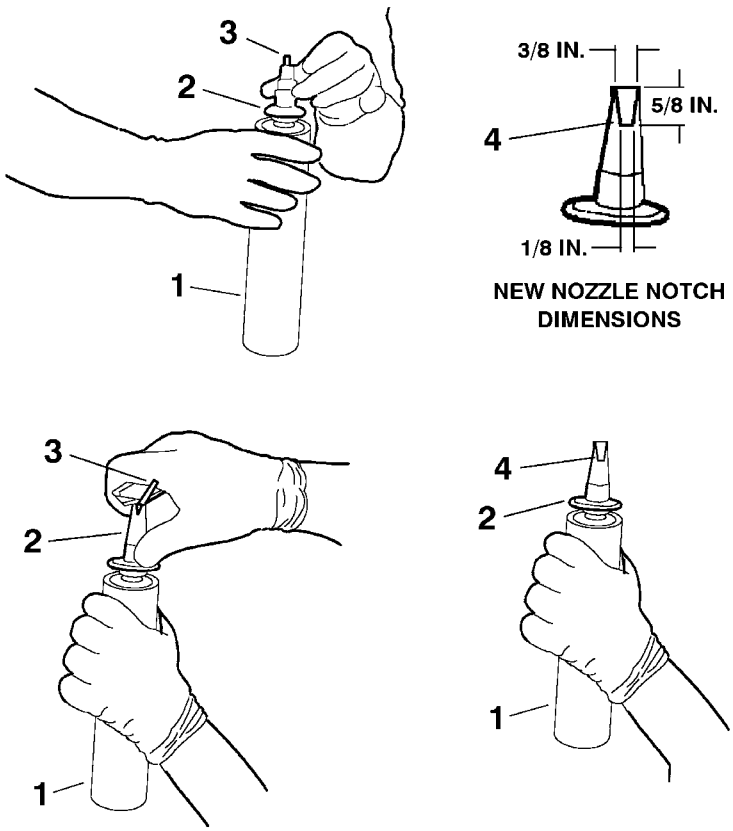

Figure 142 Installing Applicator Nozzle on U400HV Urethane Adhesive Tube and Cutting Tab off

1. U400HV URETHANE ADHESIVE TUBE
2. APPLICATOR NOZZLE
3. CUT TAB OFF APPLICATION NOZZLE
4. CUT 3/8 INCH WIDE AND 5/8 LONG NOTCH INTO APPLICATION NOZZLE

18. Load U400HV one part urethane adhesive into a standard caulking gun.

NOTE – A battery powered or electric powered betagun is available from Essex® for easier application of the U400HV urethane adhesive onto the windshield.

NOTE – Application of adhesive bead on new windshield shall be 0 to 2 mm from encapsulation edge and be at least 5/8 to 3/4 inch (15 to 20 mm) high and 3/8 to 1/2 inch (8 to 12 mm) wide maximum.

Refer to Figure 143 for Items in parentheses.

19. Hold caulking gun (Item 1) with applicator nozzle (Item 2) as close to a 90 degree angle as possible and start at the outer edge of locating tab on bottom edge of windshield at either driver or passenger side. Going toward the corner, apply a uniform bead of adhesive (Item 3) all the way around windshield. Overlap

adhesive at the seam slightly, and use a plastic or wood tongue depressor (Item 4) to smooth or even out adhesive as required before installing windshield.

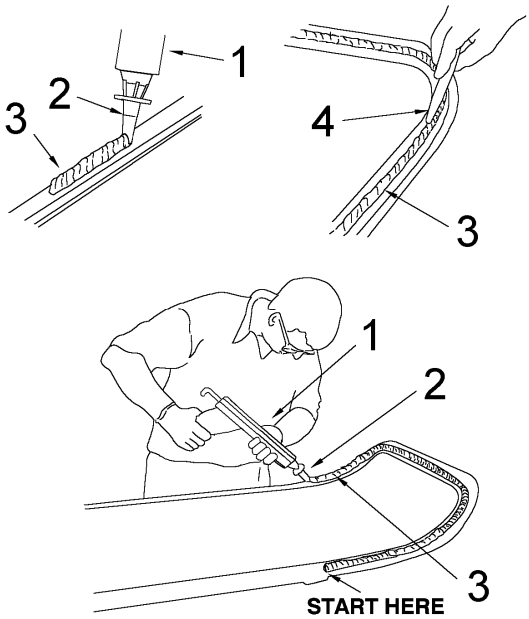

Figure 143 Using Caulking Gun to Apply Adhesive

1. CAULKING GUN
2. APPLICATOR NOZZLE
3. ADHESIVE
4. PLASTIC OR WOOD TONGUE DEPRESSOR

20. Once adhesive has been applied on windshield. With the aid of an assistant install windshield (Figure 138) (See Figure 138, page 213) as follows:

Refer to Figure 139 (See Figure 139, page 214) for Items in parentheses.

21. If the vehicle has a sun shade (Item 1), position new windshield (Item 2) under sun shade being careful not to touch windshield on cab. Align tape mark (Item 3) on windshield with tape mark on top of cab and align windshield locator tabs (Item 4) on new windshield with cab locator darts (Item 5) at the bottom of windshield opening on cab.

Refer to Figure 140 (See Figure 140, page 215) for Items in parentheses.

22. On vehicles without a sun shade, align the piece of tape (Item 1) at the top of the windshield with tape (Item 2) above windshield opening on the cab, then position windshield locator tabs (Item 3) on cab locator darts (Item 4). While holding windshield locator tabs in place on cab locator darts, push windshield (Item 5) back against windshield fence (Item 6). Check windshield encapsulation rubber trim (Item 7) to make sure it is positioned properly around windshield opening.

23. With the aid of an assistant, gently push on windshield all around outer edge to set it properly against windshield fence (Figure 141) (See Figure 141, page 216). There are tabs built into the windshield to keep it from being pushed in too far.

Refer to Figure 140 (See Figure 140, page 215) for Items in parentheses.

24. Remove both pieces of tape (Items 1 and 2) from windshield and cab.

Refer to Figure 5 (See Figure 5, page 6) for Items in parentheses.

25. If the unit is equipped with an exterior sun shade (Item 1) remove piece of tape (Item 2) from bottom side of each sun shade mounting bracket (Item 3) used to protect sun shade mounting bracket paint while cutting out windshield. If sun shade was removed, reinstall sun shade. Refer to **SUN SHADE** (See Install SUN SHADE, page 247)**, Install Sun Shade for 5000*i* or 9000*i* Series** as required.

26. Position both defroster duct cover panels (Item 2, Figure 7) (See Figure 7, page 9) in place inside cab and install ten torx pan head screws (Item 1, Figure 7) (See Figure 7, page 9).

Refer to Figure 6 (See Figure 6, page 8) for all Items in parentheses unless otherwise noted.

27. Position driver side A pillar trim panel (Item 2) in place inside cab and install four torx self-drilling screws (Item 3). Reinstall four fastener covers (Item 1) on fasteners of A pillar trim panel.

28. Before installing passenger side A pillar (Item 5), install passenger side window demist duct with rubber tube (Item 8) in place and install two torx self-drilling screws (Item 7) to secure it.

29. Use a blunt tip screwdriver to pry the side cab trim panel out slightly to position the bottom of the passenger side A pillar trim panel (Item 5) in place behind it. Note that the bottom torx self-drilling screw (Item 6) goes through the inner side cab trim panel and passenger side A pillar trim panel. Position passenger side A pillar in place inside cab and install three torx self-drilling screws (Item 6) securing it to the cab. Reinstall fastener covers (Item 4) on two upper fasteners only on passenger side A pillar trim panel.

30. Once both defroster duct cover panels (Item 2, Figure 7) (See Figure 7, page 9), driver side A pillar trim panel (Item 2) and passenger side A pillar trim panel (Item 5) have been reinstalled inside the cab, turn the blower onto high speed to check that the defroster works properly and to blow out any debris that may have fallen into the ducts while removing the windshield. If any debris came out, wipe it away.

31. Reinstall windshield wiper arms and blades. Refer to **WINDSHIELD WIPER ARM AND BLADE ASSEMBLY** (See Install WINDSHIELD WIPER ARM AND BLADE ASSEMBLY, page 271)**, Install Windshield Wiper Arm and Blade Assembly**.

32. Test operation of windshield wipers and washer, then clean windshield and surrounding area.

33. Close hood and latch hood on both sides.

IMPORTANT – To allow for the correct curing time of U400HV one part urethane adhesive, you will need to use the area on the Form Bonded Windshield Replacement Report (Figure 181) (See Figure 181, page 341) to record Time, Temperature and Humidity and follow the cure table for U400HV.

5.2. TWO PIECE ENCAPSULATED WINDSHIELD

There are two types of urethane adhesive that may be used to install encapsulated windshields on the vehicles covered in this service manual.

It is recommended to use the two part U216 urethane adhesive that comes in the Essex® windshield installation kit (Figure 123) (See Figure 123, page 198). The use of this urethane adhesive allows for a 30 minute drive away time for the customer.

An optional one part U400HV urethane adhesive may be used when installing encapsulated windshields, but the cure time is based on time, temperature and humidity and the cure table for U400HV urethane adhesive. This requires a much longer drive away time for the customer.

Install Two Piece Encapsulated Windshield using Two Part U216 Urethane Adhesive (adhesive A and curative B)

Refer to Figure 4 (See Figure 4, page 5) for Items in parentheses.

The 5000*i* Series and 9000*i* Series vehicles come standard with a one piece encapsulated windshield (Item 1). A two piece encapsulated windshield (Item 2) is available as an option.

IMPORTANT – To install a two piece encapsulated windshield you will need to have the INTERNATIONAL® Bonded Windshield Tool Kit ZTSE4470. This kit has a tool box that includes the tools required to remove and install bonded windshields. To order, call toll free in U. S. and Canada 1–800–520–2584 or Fax 1–800–578–7375. **NOTE** — The INTERNATIONAL® Bonded Windshield Tool Kit ZTSE4470 is no longer available through the INTERNATIONAL® tool supplier. For materials that are available contact INTERNATIONAL® service parts.

To install a two piece encapsulated windshield, you will also need the Essex® windshield installation kit (Figure 123) (See Figure 123, page 198). One Essex® windshield installation kit will be needed for each half of the windshield if both halves are being replaced at the same time. The kit includes:

- U413 windshield fence primer
- U401 windshield glass prep
- U402 windshield glass primer
- U216 adhesive (two tubes, adhesive A and curative B)
- Application mixing head
- Applicator nozzle

These materials must be used on or before expiration date marked on container. U413 windshield Fence Primer, U401 windshield Glass Prep and U402 windshield Glass Primer have a 6 month shelf life. U216 Urethane adhesive A and Curative B tubes have a 9 month shelf life.

In addition to the items supplied in the Essex® windshield installation kit (Figure 123) (See Figure 123, page 198), you will need the following materials:

In addition to the items supplied in the kit listed above, you will need the following materials:

- Essex® GC800 glass cleaner
- White or brown paper towels
- Applicator nozzles from Essex® to puncture U216 adhesive (two tubes, adhesive A and curative B)

NOTE – For the windshield, use only laminated safety glass (AS–1 per ANSI Z26.1–Latest revision) and International TMS–9522 (SAE J1203).

WARNING – To avoid personal injury, wear protective work gloves when handling the windshield. Also wear appropriate protective gloves when using any of the Betaseal system chemicals from the Essex® windshield installation kit.

CAUTION – Never try to use any remaining U216 urethane adhesive left over after installing first windshield half when installing both windshield halves at the same time. Due to the quick cure time of U216 urethane adhesive, the adhesive will have started curing by the time you are ready to apply it to the other windshield half. You must use a second Essex® windshield installation kit (Figure 123) (See Figure 123, page 198) when installing the second windshield half.

NOTE – Before installing new windshield, wipe off any water remaining around windshield fence and surrounding cab area with a lint free cloth.

1. Dry fit new windshield on vehicle to make sure the windshield fits windshield opening properly before applying U216 adhesive. Once the windshield is positioned properly in the windshield opening place a piece of tape as a reference mark across the center upper portion of windshield and cab. Use a utility knife and cut the tape between the cab and windshield.

2. Remove new windshield from vehicle and place it on a suitable padded work stand to prepare it for installation.

Refer to Figure 124 (See Figure 124, page 200) for Items in parentheses.

3. Remove urethane adhesive (Item 1) from windshield fence (Item 2) around windshield opening with a gasket chisel (Item 3). A thin layer of old urethane adhesive of 2 to 3 mm thick (Item 4) may be left on windshield fence. Try to keep a consistent thickness of old urethane adhesive around the perimeter of the windshield fence.

Refer to Figure 125 (See Figure 125, page 201) for Items in parentheses.

4. Clean dirt and any water left from spraying around windshield during removal off windshield fence (Item 1) with a brush or clean, lint free cloth (Item 2) before installing new windshield.

Refer to Figure 126 (See Figure 126, page 202) for Items in parentheses unless otherwise noted.

5. Take U413 windshield fence primer (Item 1, Figure 123) (See Figure 123, page 198) from Essex® windshield installation kit. Shake U413 windshield fence primer (Item 1) for at least one minute. Remove cover (Item 2) from container.

Refer to Figure 127 (See Figure 127, page 202) for Items in parentheses.

6. Apply U413 windshield fence primer (Item 1) with a clean dry applicator (Item 2) to cover scratches and bare metal on windshield fence (Item 3). DO NOT apply U413 windshield fence primer over old urethane adhesive left on windshield fence.

7. Allow U413 windshield fence primer to dry for 6 to 10 minutes minimum after application.

8. With new windshield on a padded stand and prepare windshield for installation as follows:

9. Using a razor blade if necessary and plastic scrubbing pad, remove any windshield encapsulation flash from bonding surface of new windshield. Clean new windshield thoroughly with Essex® glass cleaner GC800 (Figure 144). Dry thoroughly with paper towels. Make sure windshield is completely clean and dry before proceeding.

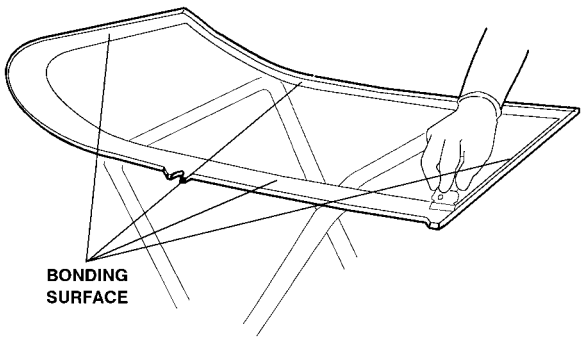

Figure 144 Cleaning Windshield for U401 Windshield Glass Prep, U402 Windshield Glass Primer and U216 Adhesive Application

Refer to Figure 126 (See Figure 126, page 202) for Items in parentheses unless otherwise noted.

10. Once new windshield has been cleaned, take U401 windshield glass prep (Item 2, Figure 123) (See Figure 123, page 198) from Essex® windshield installation kit. Shake U401 windshield glass prep (Item 1) for at least one minute. Remove cover (Item 2) from container.

NOTE – Read completely through step 11 below to ensure the correct application and removal of the windshield glass prep U401.

Refer to Figure 145 for Items in parentheses.

11. Apply U401 windshield glass prep (Item 1) with a clean, dry applicator (Item 2) to bonding surface only on new windshield (Item 3). If applied to clear glass surface, glass will haze. Immediately wipe windshield glass prep off by following eight to ten inches behind the applicator with a white or brown paper towel. DO NOT use a cloth shop towel. After completing first application of windshield glass prep, repeat windshield glass prep application and removal process. This is a clear liquid.

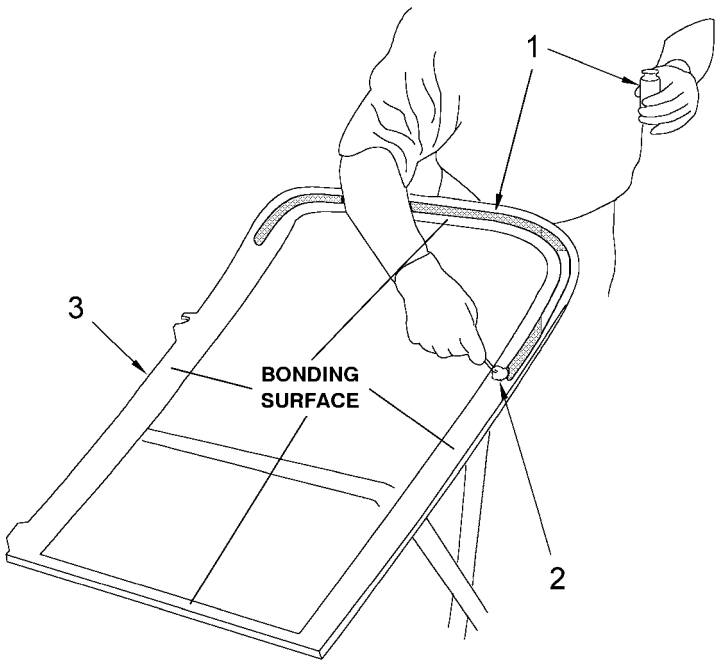

Figure 145 Application of U401 Windshield Glass Prep to Windshield

1. U401 WINDSHIELD GLASS PREP
2. APPLICATOR
3. NEW WINDSHIELD

Refer to Figure 126 (See Figure 126, page 202) for Items in parentheses unless otherwise noted.

12. Once U401 windshield glass prep has been applied and wiped off new windshield, take U402 windshield glass primer (Item 3, Figure 123) (See Figure 123, page 198) from Essex® windshield installation kit. Shake U402 windshield glass primer (Item 1) for at least one minute. Remove cover (Item 2) from container.

Refer to Figure 146 for Items in parentheses.

13. Apply U402 windshield glass primer (Item 1) with a clean, dry applicator (Item 2) to bonding surface on new windshield (Item 3).

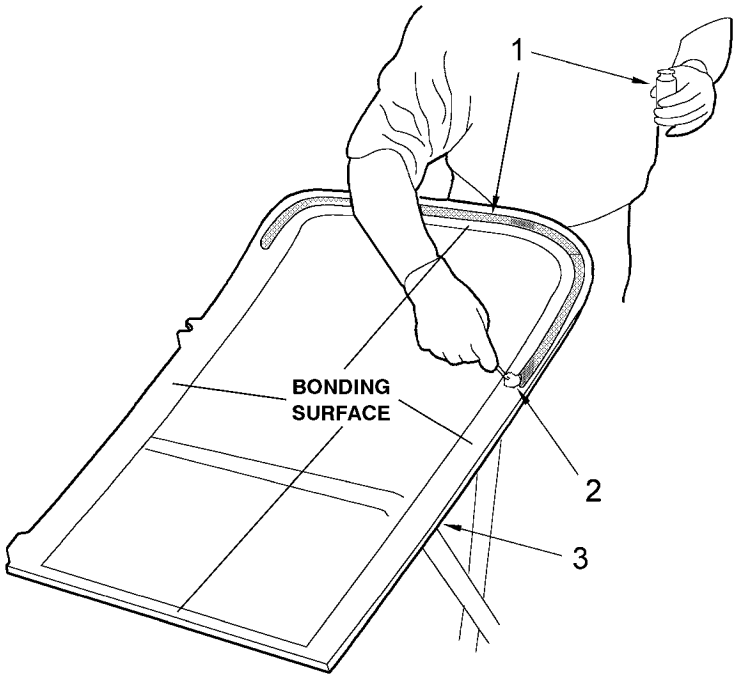

Figure 146 Application of U402 Windshield Glass Primer to Windshield

1. U402 WINDSHIELD GLASS PRIMER
2. APPLICATOR
3. NEW WINDSHIELD

14. Allow U402 windshield glass primer to dry to a tack free condition for 6 to 10 minutes minimum after application.

> **CAUTION – Once the windshield has been primed, ensure there is no contact with bonding surface as oil from skin will affect bonding performance. If the windshield is not bonded properly the cab strength and safety would be compromised. If contact with bonding surface has occurred, repeat the cleaning process and reapply U402 windshield glass primer and allow it to dry for 6 to 10 minutes before applying U216 adhesive.**

15. Remove Essex® U216 adhesive (two tubes, adhesive A and curative B), application mixing head and applicator nozzle (Items 4 thru 7, Figure 123) (See Figure 123, page 198) from Essex® windshield installation kit.

Refer to Figure 131 (See Figure 131, page 206) for Items in parentheses.

16. Using the pull tab or a screwdriver (Item 1) if pull tab not supplied, pry out bottom cover (Item 2) from both adhesive A and curative B adhesive tubes (Item 3).

Refer to Figure 132 (See Figure 132, page 207) for Items in parentheses unless otherwise noted.

17. Use one applicator nozzle (Item 1) supplied separately by Essex® to puncture adhesive A tube (Item 2). Use the other applicator nozzle (Item 1) supplied separately by Essex® to puncture curative B tube (Item 2). DO NOT use the same applicator nozzle to puncture both tubes; this keeps from contaminating the

other tube before installing application mixing head (Item 6, Figure 123) (See Figure 123, page 198). Be sure to push applicator nozzle all the way in to ensure adhesive tubes are fully opened.

18. Once both adhesive A and curative B adhesive tubes (Item 2) have been prepared for use, remove application mixing head (Item 6, Figure 123) (See Figure 123, page 198) from Essex® windshield installation kit.

Refer to Figure 133 (See Figure 133, page 208) for Items in parentheses.

19. Install both adhesive A and curative B adhesive tubes (Item 1) on application mixing head (Item 2).

Refer to Figure 134 (See Figure 134, page 209) for Items in parentheses unless otherwise noted.

20. Once both adhesive A and curative B adhesive tubes (Item 1) are installed on application mixing head (Item 2), remove applicator nozzle (Item 7, Figure 123) (See Figure 123, page 198) from Essex® windshield installation kit. Install applicator nozzle (Item 3) on application mixing head (Item 2). Cut tab (Item 4) off applicator nozzle. Measure and mark a 3/8 inch wide by 5/8 inch long with a 1/8 inch wide dimension at the base of the new notch (Item 5) to replace the current V-notch on the applicator nozzle. Use a utility knife and cut out new notch to allow for proper adhesive application.

Refer to Figure 135 (See Figure 135, page 210) for Items in parentheses.

21. Before loading adhesive tubes with application mixing head and applicator nozzle (Item 1) into betagun (Item 2), pull trigger and run plungers (Item 3) all the way back to allow for adhesive tubes to be loaded. Open front cover (Item 4) on betagun and install adhesive tubes with application mixing head and applicator nozzle into betagun.

Refer to Figure 136 (See Figure 136, page 211) for Items in parentheses.

22. Once adhesive tubes with application mixing head and applicator nozzle (Item 1) have been installed into betagun (Item 2), close front cover (Item 3). Run plungers (Item 4) forward on betagun until plungers are in position to apply adhesive. Stop when adhesive reaches applicator nozzle.

NOTE – When replacing both passenger and driver side windshields the passenger side windshield should be installed first, then install driver side windshield. If passenger side windshield only is being replaced, there is a tab which is part of the encapsulation rubber trim at the top of the driver side windshield that must be flipped out from behind the passenger side windshield after installation. This encapsulation rubber trim tab has a beveled edge that lays over and matches the beveled edge of the encapsulation rubber trim on the passenger side windshield.

NOTE – Application of adhesive bead shall be 0 to 2 mm from encapsulation edge and be at least 5/8 to 3/4 inch (15 to 20 mm) high and 3/8 to 1/2 inch (8 to 12 mm) wide maximum.

IMPORTANT – If U216 two part adhesive runs out before getting all the way around the windshield, it is acceptable to fill in the gap left (6 inches or less) with U400HV one part urethane adhesive using a standard cocking gun. It is recommended that because of the short time frame in which to install the windshield to have a tube of U400HV one part urethane adhesive loaded into a cocking gun and ready to use so the time will not run out to get the windshield installed onto the vehicle.

Refer to Figure 147 for Items in parentheses.

23. Holding betagun (Item 1) and applicator nozzle (Item 2) as close to a 90 degree angle as possible and starting at the International logo on lower driver side corner, pull trigger to apply a uniform bead of adhesive

(Item 3) going across the bottom all the way around windshield. The harder you pull the trigger the faster the adhesive will extrude. Use this variable speed control to slow down as you apply adhesive around the corners. Overlap adhesive at the seam slightly, and use a plastic or wood tongue depressor (Item 4) to smooth or even out adhesive as required before installing windshield.

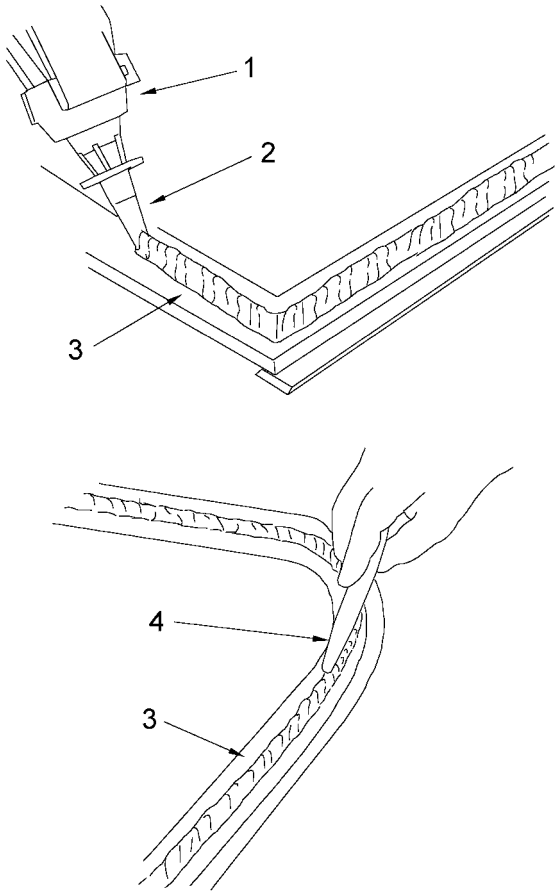

Figure 147 Using Betagun to Apply Adhesive

1. BETAGUN
2. APPLICATOR NOZZLE
3. ADHESIVE
4. PLASTIC OR WOOD TONGUE DEPRESSOR

24. Once adhesive has been applied on windshield it MUST be installed within 5 to 7 minutes maximum. Adhesive starts curing immediately and will not provide an adequate bond if not installed within the 5 to 7 minute time frame.

25. Carry windshield to vehicle and install as follows, driver side windshield shown (Figure 148).

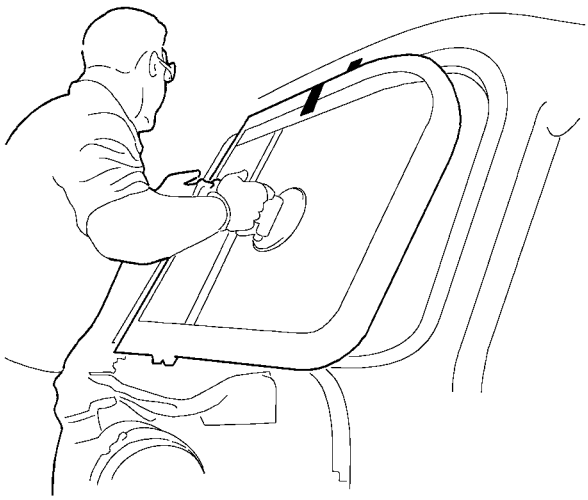

Figure 148 Installing Windshield

Refer to Figure 149 for Items in parentheses.

26. If the vehicle has a sun shade, position new windshield under sun shade being careful not to touch windshield on cab. Align tape mark (Item 1) on windshield with tape mark on top of cab (Item 2) and align windshield locator tabs (Item 3) on new windshield with cab locator darts (Item 4) at the bottom of windshield opening on cab, driver and passenger side windshield shown.

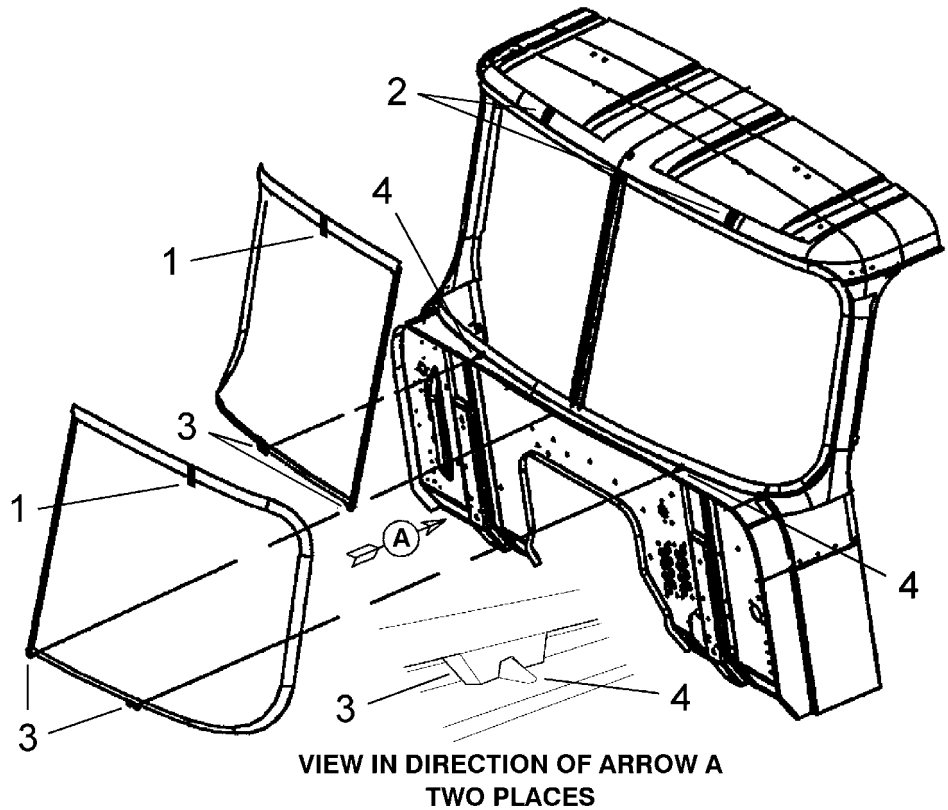

Figure 149 Positioning Windshield Locator Tabs on Cab Locator Darts

1. TAPE MARK ON WINDSHIELD
2. TAPE MARK ON TOP OF CAB
3. WINDSHIELD LOCATOR TAB
4. CAB LOCATOR DARTS

Refer to Figure 150 for Items in parentheses.

27. On vehicles without a sun shade, align the piece of tape (Item 1) at the top of the windshield with tape (Item 2) above windshield opening on the cab, then position windshield locator tabs (Item 3) on cab locator darts (Item 4). While holding windshield locator tabs in place on cab locator darts, push driver side windshield (Item 5) or passenger side windshield (Item 6) back against windshield fence (Item 7). Check windshield encapsulation rubber trim (Item 8) to make sure it is positioned properly around windshield opening.

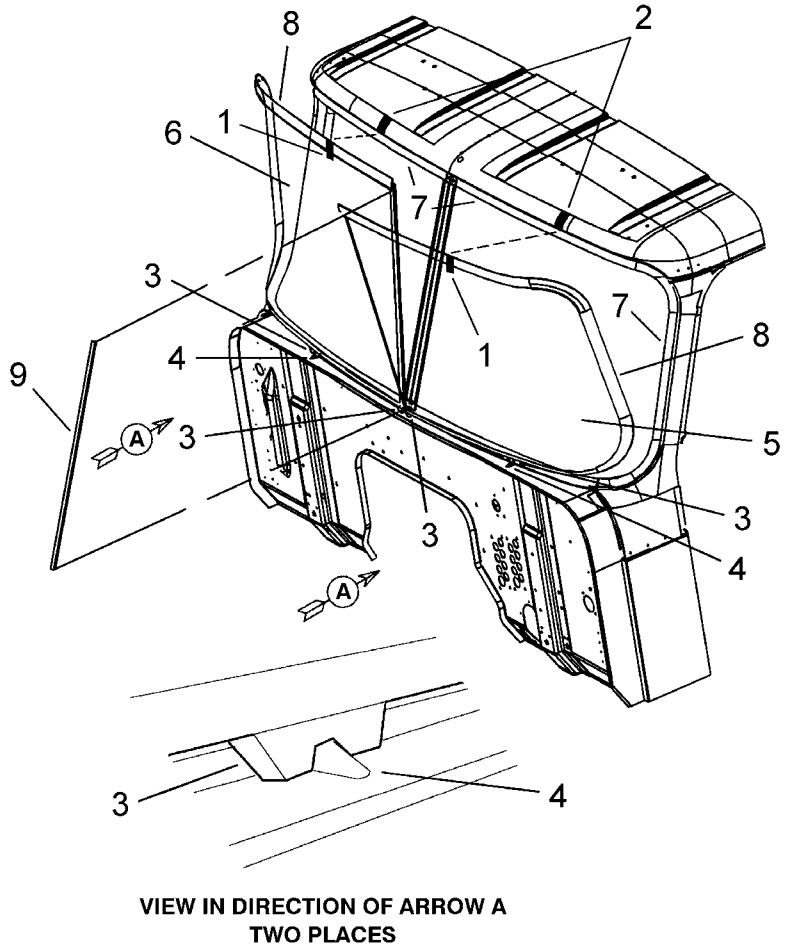

Figure 150 Pushing Windshield into Place

1. TAPE ON WINDSHIELD
2. TAPE ON CAB
3. WINDSHIELD LOCATOR TAB
4. CAB LOCATOR DARTS
5. DRIVER SIDE WINDSHIELD
6. PASSENGER SIDE WINDSHIELD
7. WINDSHIELD FENCE
8. WINDSHIELD ENCAPSULATION RUBBER TRIM
9. CENTER DIVIDER BAR TRIM STRIP

Refer to Figure 151 for Items in parentheses unless otherwise noted.

28. Make sure gap (Item 1) for center divider bar trim strip (Item 9, Figure 150) (See Figure 150, page 232) between driver side windshield (Item 2) and passenger side windshield (Item 3) is even and free of any obstruction.

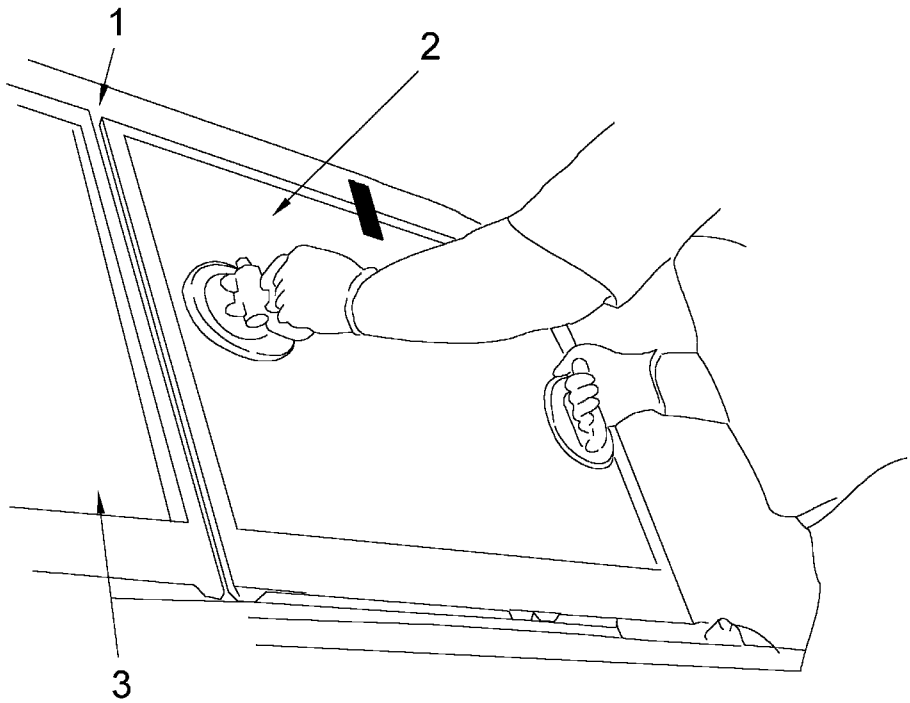

Figure 151 Center Divider Bar Gap between Driver and Passenger Side Windshields

1. GAP
2. DRIVER SIDE WINDSHIELD
3. PASSENGER SIDE WINDSHIELD

29. Once windshield is in correct position gently push on windshield all around outer edge to set it properly against windshield fence (Figure 152). There are tabs built into the windshield to keep it from being pushed in too far, driver side windshield shown.

Refer to Figure 152 for Items in parentheses.

30. Remove both pieces of tape (Items 1 and 2) from windshield and cab.

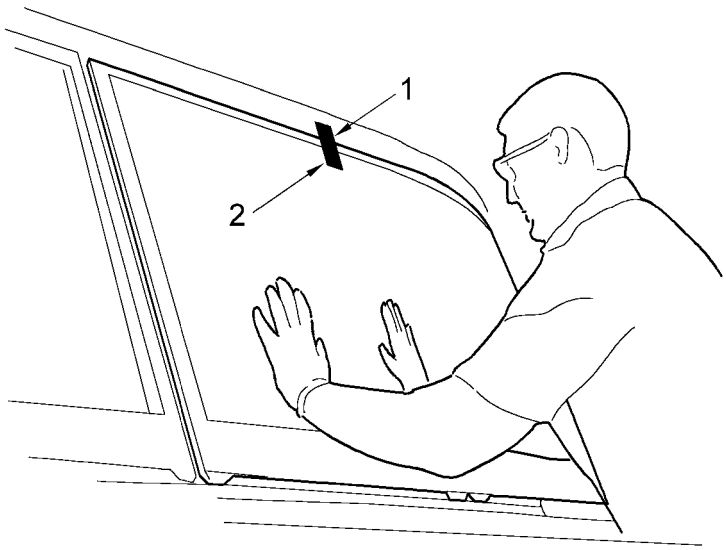

Figure 152 Pushing Windshield Back Against Windshield Fence

1. TAPE ON CAB
2. TAPE ON WINDSHIELD

Refer to Figure 153 for Items in parentheses unless otherwise noted.

31. Before installing center divider bar trim strip (Item 9, Figure 150) (See Figure 150, page 232) use betagun (Item 1) and apply a small bead of adhesive, about 1 inch in length (Item 2), at the top and bottom of center divider bar trim strip gap (Item 3) between driver side windshield (Item 4) and passenger side windshield (Item 5). Use a plastic or wood tongue depressor (Item 6) and smooth adhesive in gap. This will insure that center divider bar trim strip will not slide up or down after installation.

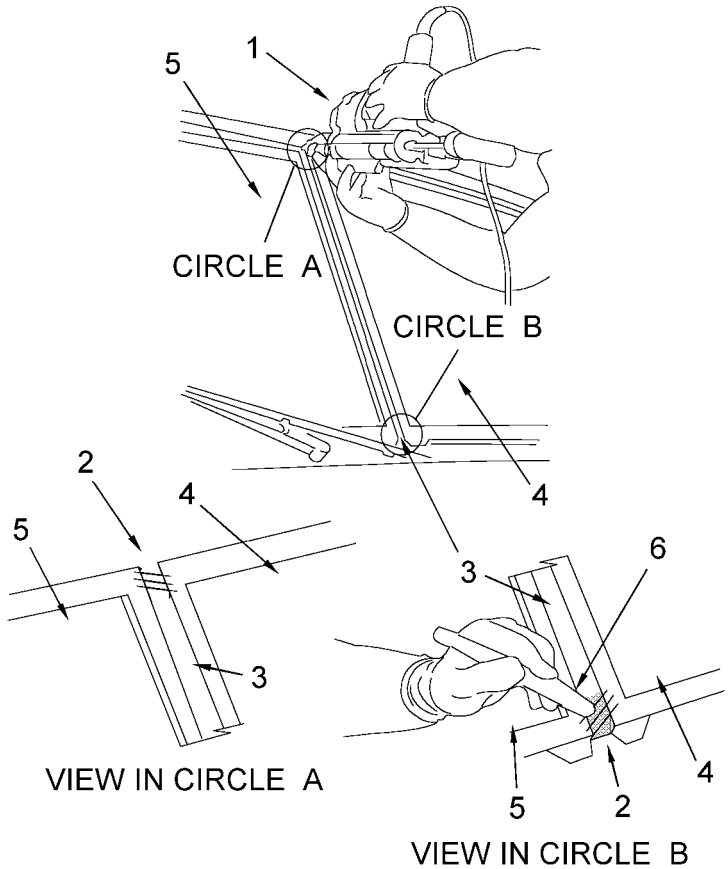

Figure 153 Center Divider Bar Gap between Driver and Passenger Side Windshields

1. BETAGUN (CAULKING GUN WHEN USING ONE PART U400HV URETHANE ADHESIVE)
2. BEAD OF ADHESIVE
3. CENTER DIVIDER BAR TRIM STRIP GAP
4. DRIVER SIDE WINDSHIELD
5. PASSENGER SIDE WINDSHIELD
6. PLASTIC OR WOOD TONGUE DEPRESSOR

Refer to Figure 154 for Items in parentheses.

32. Starting at the top, install center divider bar trim strip (Item 1). Using your fingers push center divider bar trim strip between driver side windshield (Item 2) and passenger side windshield (Item 3). Use a small plastic roller (Item 4) or soft rubber mallet to seat center divider bar trim strip into gap.

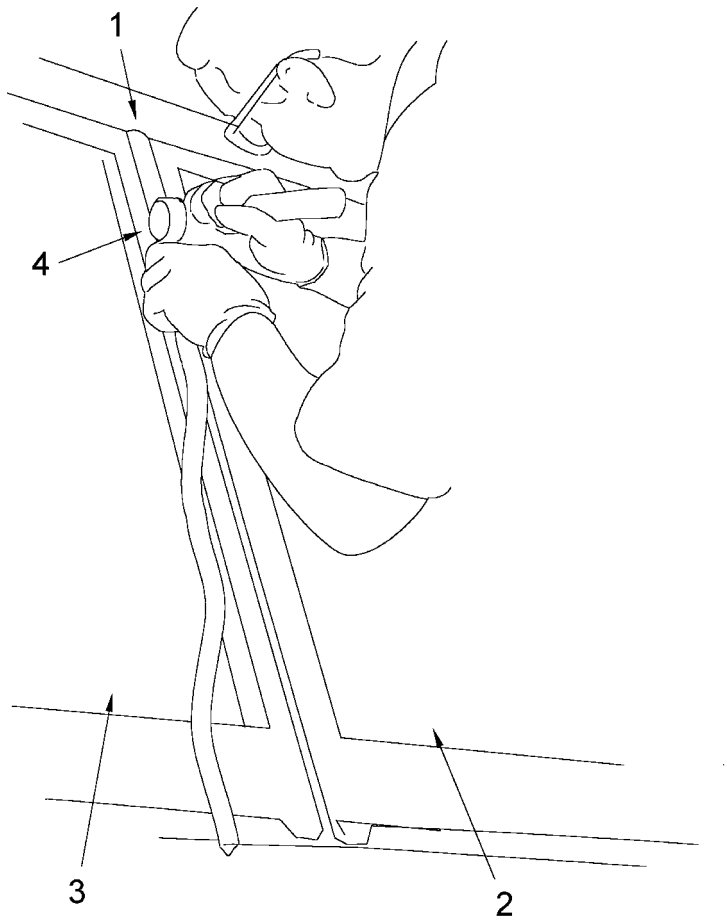

Figure 154 Center Divider Bar Gap between Driver and Passenger Side Windshields

1. CENTER DIVIDER BAR TRIM STRIP
2. DRIVER SIDE WINDSHIELD
3. PASSENGER SIDE WINDSHIELD
4. PLASTIC ROLLER

Refer to Figure 5 (See Figure 5, page 6) for Items in parentheses.

33. If the unit is equipped with an exterior sun shade (Item 1) remove piece of tape (Item 2) from bottom side of each sun shade mounting bracket (Item 3) used to protect sun shade mounting bracket paint while cutting out windshield. If sun shade was removed, reinstall sun shade. Refer to **SUN SHADE** (See Install SUN SHADE, page 247)**, Install Sun Shade for 5000*i* or 9000*i* Series** as required.

34. Position both defroster duct cover panels (Item 2, Figure 7) (See Figure 7, page 9) in place inside cab and install ten torx pan head screws (Item 1, Figure 7) (See Figure 7, page 9).

Refer to Figure 6 (See Figure 6, page 8) for Items in parentheses unless otherwise noted.

35. Position driver side A pillar trim panel (Item 2) in place inside cab and install four torx self-drilling screws (Item 3). Reinstall four fastener covers (Item 1) on fasteners of A pillar trim panel.

36. Before installing passenger side A pillar (Item 5), install passenger side window demist duct with rubber tube (Item 8) in place and install two torx self-drilling screws (Item 7) to secure it.

37. Use a blunt tip screwdriver to pry the side cab trim panel out slightly to position the bottom of the passenger side A pillar trim panel (Item 5) in place behind it. Note that the bottom torx self-drilling screw (Item 6) goes through the inner side cab trim panel and passenger side A pillar trim panel. Position passenger side A pillar in place inside cab and install three torx self-drilling screws (Item 6) securing it to the cab. Reinstall fastener covers (Item 4) on two upper fasteners only on passenger side A pillar trim panel.

38. Once both defroster duct cover panels (Item 2, Figure 7) (See Figure 7, page 9), driver side A pillar trim panel (Item 2) and passenger side A pillar trim panel (Item 5) have been reinstalled inside the cab, turn the blower onto high speed to check that the defroster works properly and to blow out any debris that may have fallen into the ducts while removing the windshield. If any debris came out, wipe it away.

39. Reinstall windshield wiper arms and blades. Refer to **WINDSHIELD WIPER ARM AND BLADE ASSEMBLY** (See Install WINDSHIELD WIPER ARM AND BLADE ASSEMBLY, page 271)**, Install Windshield Wiper Arm and Blade Assembly**.

40. Test operation of windshield wipers and washer, then clean windshield and surrounding area.

41. Close hood and latch hood on both sides.

IMPORTANT – The quick curing time of U216 two part urethane adhesive allows the vehicle to be driven 30 minutes after completing windshield installation. If the vehicle is equipped with AIR BAGS, the U216 two part urethane adhesive should be allowed to cure for 60 minutes before driving. Even if U400HV one part urethane adhesive has to be used to fill in a gap of **6 inches or less** during the application of U216 two part urethane adhesive the cure time before the vehicle can be driven will be the same as above. **If more than 6 inches of U400HV one part urethane adhesive is used**, you will need to use the area on the Form Bonded Windshield Replacement Report (Figure 183) (See Figure 183, page 345) to record Time, Temperature and Humidity and follow the cure table for U400HV.

Install Two Piece Encapsulated Windshield using One Part U400HV Urethane Adhesive

Although it is recommended to use the two part U216 urethane adhesive that comes in the Essex® windshield installation kit (Figure 123) (See Figure 123, page 198). The optional one part U400HV urethane adhesive may be used when installing a two piece encapsulated windshield.

Refer to Figure 4 (See Figure 4, page 5) for Items in parentheses.

The 5000*i* Series and 9000*i* Series vehicles come standard with a one piece encapsulated windshield (Item 1). A two piece encapsulated windshield (Item 2) is available as an option.

IMPORTANT – To install a two piece encapsulated windshield you will need to have the INTERNATIONAL® Bonded Windshield Tool Kit ZTSE4470. This kit has a tool box that includes the tools required to remove and install bonded windshields. To order, call toll free in U. S. and Canada 1–800–520–2584 or Fax 1–800–578–7375. **NOTE** — The INTERNATIONAL® Bonded Windshield Tool Kit ZTSE4470 is no longer available through the INTERNATIONAL® tool supplier. For materials that are available contact INTERNATIONAL® service parts.

To install a one piece encapsulated windshield, you will also need the following items.

- U413 window fence primer
- U401 window glass prep
- U402 window glass primer
- U400HV adhesive (one tube)
- Standard caulking gun

These materials must be used on or before expiration date marked on container. U413 windshield Fence Primer, U401 windshield Glass Prep and U402 windshield Glass Primer have a 6 month shelf life. U400HV Urethane adhesive tube has a 9 month shelf life.

IMPORTANT – When using U400HV one part urethane adhesive, you will need to use the area on the Form Bonded Windshield Replacement Report (Figure 181) (See Figure 181, page 341) to record Time, Temperature and Humidity and follow the cure table for U400HV. This is critical to when the vehicle can be driven after completing the windshield installation.

In addition to the items listed at the beginning of this section, you will need the following materials:

- Essex® GC800 glass cleaner
- White or brown paper towels
- Applicator nozzles supplied by Essex® to puncture UU400HV adhesive tube

NOTE – For the windshield, use only laminated safety glass (AS–1 per ANSI Z26.1–Latest revision) and International TMS–9522 (SAE J1203).

WARNING – To avoid personal injury, wear protective work gloves when handling the windshield. Also wear appropriate protective gloves when using any of the Betaseal system chemicals from Essex®.

NOTE – Before installing new windshield, wipe off any water remaining around windshield fence and surrounding cab area with a lint free cloth.

1. Dry fit new windshield on vehicle to make sure the windshield fits windshield opening properly before applying U400HV adhesive. Once the windshield is positioned properly in the windshield opening, place a piece of tape as a reference mark across the center upper portion of windshield and cab. Use a utility knife and cut the tape between the cab and windshield.

2. Remove new windshield from vehicle and place it on a suitable padded work stand to prepare it for installation.

Refer to Figure 124 (See Figure 124, page 200) for Items in parentheses.

3. Remove urethane adhesive (Item 1) from windshield fence (Item 2) around windshield opening with a gasket chisel (Item 3). A thin layer of old urethane adhesive of 2 to 3 mm thick (Item 4) may be left on windshield fence. Try to keep a consistent thickness of old urethane adhesive around the perimeter of the windshield fence.

Refer to Figure 125 (See Figure 125, page 201) for Items in parentheses.

4. Clean dirt and any water left from spraying around windshield during removal, off windshield fence (Item 1) with a brush or clean, lint free cloth (Item 2) before installing new windshield.

Refer to Figure 126 (See Figure 126, page 202) for Items in parentheses.

5. Take a bottle of U413 windshield fence primer from Essex®. Shake U413 windshield fence primer (Item 1) for at least one minute. Remove cover (Item 2) from container.

Refer to Figure 127 (See Figure 127, page 202) for Items in parentheses.

6. Apply U413 windshield fence primer (Item 1) with a clean, dry applicator (Item 2) to cover scratches and bare metal on windshield fence (Item 3). DO NOT apply U413 windshield fence primer over old urethane adhesive left on windshield fence.

7. Allow U413 windshield fence primer to dry for 6 to 10 minutes minimum after application.

8. With new windshield on a padded work stand, prepare windshield for installation as follows:

9. Using a razor blade if necessary, and plastic scrubbing pad, remove any windshield encapsulation flash from bonding surface of new windshield. Clean new windshield thoroughly with Essex® glass cleaner GC800 (Figure 144) (See Figure 144, page 225). Dry thoroughly with paper towels. Make sure windshield is completely clean and dry before proceeding.

Refer to Figure 126 (See Figure 126, page 202) for Items in parentheses.

10. Once the new windshield has been cleaned, take U401 windshield glass prep from Essex®. Shake U401 windshield glass prep (Item 1) for at least one minute. Remove cover (Item 2) from container.

NOTE – Read completely through Step 11 below to ensure the correct application and removal of the glass prep U401.

Refer to Figure 145 (See Figure 145, page 226) for Items in parentheses.

11. Apply U401 windshield glass prep (Item 1) with a clean, dry applicator (Item 2) to bonding surface only on new windshield (Item 3). If applied to clear glass surface, glass will haze. Immediately wipe windshield glass prep off by following eight to ten inches behind the applicator with a white or brown paper towel. DO NOT use a cloth shop towel. After completing first application of windshield glass prep, repeat windshield glass prep application and removal process. This is a clear liquid.

Refer to Figure 126 (See Figure 126, page 202) for Items in parentheses.

12. Once U401 windshield glass prep has been applied and wiped off new windshield, take U402 windshield glass primer from Essex®. Shake U402 windshield glass primer (Item 1) for at least one minute. Remove cover (Item 2) from container.

Refer to Figure 146 (See Figure 146, page 227) for Items in parentheses.

13. Apply U402 windshield glass primer (Item 1) with a clean, dry applicator (Item 2) to bonding surface on new windshield (Item 3).

14. Allow U402 windshield glass primer to dry to a tack free condition for 6 to 10 minutes minimum after application.

CAUTION – Once the windshield has been primed, ensure there is no contact with bonding surface as oil from skin will affect bonding performance. If the windshield is not bonded properly the cab strength and safety would be compromised. If contact with bonding surface has occurred, repeat the cleaning process and reapply U402 windshield glass primer and allow it to dry for 6 to 10 minutes before applying U400HV adhesive.

Refer to Figure 131 (See Figure 131, page 206) for Items in parentheses.

15. Using the pull tab or a screwdriver (Item 1), if pull tab not supplied, pry out bottom cover (Item 2) from U400HV urethane adhesive tube (Item 3).

Refer to Figure 132 (See Figure 132, page 207) for Items in parentheses.

16. Use applicator nozzle (Item 1) supplied by Essex® to puncture U400HV urethane adhesive tube (Item 2). Be sure to push applicator nozzle all the way in to ensure urethane adhesive tube is fully opened. Wipe off any adhesive from applicator nozzle before it can dry.

Refer to Figure 142 (See Figure 142, page 220) for Items in parentheses.

17. Once the U400HV urethane adhesive tube (Item 1) has been punctured. Install applicator nozzle (Item 2) on the U400HV urethane adhesive tube. Cut tab (Item 3) off applicator nozzle. Measure and mark a 3/8 inch wide by 5/8 inch long with a 1/8 inch wide dimension at the base of the new notch (Item 4) to replace the current V-notch on the applicator nozzle. Use a utility knife and cut out new notch to allow for proper adhesive application.

18. Load U400HV one part urethane adhesive into a standard caulking gun.

NOTE – A battery powered or electric powered betagun is available from Essex® for easier application of the U400HV urethane adhesive onto the windshield.

NOTE – When replacing both passenger and driver side windshields the passenger side windshield should be installed first, then install driver side windshield. If passenger side windshield only is being replaced, there is a tab which is part of the encapsulation rubber trim at the top of the driver side windshield that must be flipped out from behind the passenger side windshield after installation. This encapsulation rubber trim tab has a beveled edge that lays over and matches the beveled edge of the encapsulation rubber trim on the passenger side windshield.

NOTE – Application of adhesive bead on new windshield shall be 0 to 2 mm from encapsulation edge and be at least 5/8 to 3/4 inch (15 to 20 mm) high and 3/8 to 1/2 inch (8 to 12 mm) wide maximum.

Refer to Figure 143 (See Figure 143, page 221) for Items in parentheses.

19. Hold caulking gun (Item 1) with applicator nozzle (Item 2) as close to a 90 degree angle as possible and start at the outer edge of locating tab on bottom edge of windshield at either driver or passenger side. Going toward the corner, apply a uniform bead of adhesive (Item 3) all the way around windshield. Overlap adhesive at the seam slightly, and use a plastic or wood tongue depressor (Item 4) to smooth or even out adhesive as required before installing windshield.

20. Once adhesive has been applied on windshield. Carry windshield to vehicle and install as follows, driver side windshield shown(Figure 148) (See Figure 148, page 230) as follows:

Refer to Figure 149 (See Figure 149, page 231) for Items in parentheses unless otherwise noted.

21. If the vehicle has a sun shade (Item 1, Figure 139) (See Figure 139, page 214), position new windshield under sun shade being careful not to touch windshield on cab. Align tape mark (Item 1) on windshield with tape mark on top of cab (Item 2) and align windshield locator tabs (Item 3) on new windshield with cab locator darts (Item 4) at the bottom of windshield opening on cab, driver and passenger side windshield shown.

Refer to Figure 150 (See Figure 150, page 232) for Items in parentheses.

22. On vehicles without a sun shade, align the piece of tape (Item 1) at the top of the windshield with tape (Item 2) above windshield opening on the cab, then position windshield locator tabs (Item 3) on cab locator darts (Item 4). While holding windshield locator tabs in place on cab locator darts, push driver side windshield (Item 5) or passenger side windshield (Item 6) back against windshield fence (Item 7). Check windshield encapsulation rubber trim (Item 8) to make sure it is positioned properly around windshield opening.

Refer to Figure 151 (See Figure 151, page 233) for Items in parentheses unless otherwise noted.

23. Make sure gap (Item 1) for center divider bar trim strip (Item 9, Figure 150) (See Figure 150, page 232) between driver side windshield (Item 2) and passenger side windshield (Item 3) is even and free of any obstruction.

24. Once windshield is in correct position gently push on windshield all around outer edge to set it properly against windshield fence (Figure 152) (See Figure 152, page 234). There are tabs built into the windshield to keep it from being pushed in too far, driver side windshield shown.

Refer to Figure 152 (See Figure 152, page 234) for Items in parentheses.

25. Remove both pieces of tape (Items 1 and 2) from windshield and cab.

Refer to Figure 153 (See Figure 153, page 235) for Items in parentheses unless otherwise noted.

26. Before installing center divider bar trim strip (Item 9, Figure 150) (See Figure 150, page 232) use caulking gun (Item 1) and apply a small bead of adhesive, about 1 inch in length (Item 2), at the top and bottom of center divider bar trim strip gap (Item 3) between driver side windshield (Item 4) and passenger side windshield (Item 5). Use a plastic or wood tongue depressor (Item 6) and smooth adhesive in gap. This will insure that center divider bar trim strip will not slide up or down after installation.

Refer to Figure 154 (See Figure 154, page 236) for Items in parentheses.

27. Starting at the top, install center divider bar trim strip (Item 1). Using your fingers push center divider bar trim strip between driver side windshield (Item 2) and passenger side windshield (Item 3). Use a small plastic roller (Item 4) or soft rubber mallet to seat center divider bar trim strip into gap.

Refer to Figure 5 (See Figure 5, page 6) for Items in parentheses.

28. If the unit is equipped with an exterior sun shade (Item 1) remove piece of tape (Item 2) from bottom side of each sun shade mounting bracket (Item 3) used to protect sun shade mounting bracket paint while cutting out windshield. If sun shade was removed, reinstall sun shade. Refer to **SUN SHADE** (See Install SUN SHADE, page 247)**, Install Sun Shade for 5000*i* or 9000*i* Series** as required.

29. Position both defroster duct cover panels (Item 2, Figure 7) (See Figure 7, page 9) in place inside cab and install ten torx pan head screws (Item 1, Figure 7) (See Figure 7, page 9).

Refer to Figure 6 (See Figure 6, page 8) for Items in parentheses unless otherwise noted.

30. Position driver side A pillar trim panel (Item 2) in place inside cab and install four torx self-drilling screws (Item 3). Reinstall four fastener covers (Item 1) on fasteners of A pillar trim panel.

31. Before installing passenger side A pillar (Item 5), install passenger side window demist duct with rubber tube (Item 8) in place and install two torx self-drilling screws (Item 7) to secure it.

32. Use a blunt tip screwdriver to pry the side cab trim panel out slightly to position the bottom of the passenger side A pillar trim panel (Item 5) in place behind it. Note that the bottom torx self-drilling screw (Item 6) goes through the inner side cab trim panel and passenger side A pillar trim panel. Position passenger side A pillar in place inside cab and install three torx self-drilling screws (Item 6) securing it to the cab. Reinstall fastener covers (Item 4) on two upper fasteners only on passenger side A pillar trim panel.

33. Once both defroster duct cover panels (Item 2, Figure 7) (See Figure 7, page 9), driver side A pillar trim panel (Item 2) and passenger side A pillar trim panel (Item 5) have been reinstalled inside the cab, turn the blower onto high speed to check that the defroster works properly and to blow out any debris that may have fallen into the ducts while removing the windshield. If any debris came out, wipe it away.

34. Reinstall windshield wiper arms and blades. Refer to **WINDSHIELD WIPER ARM AND BLADE ASSEMBLY** (See Install WINDSHIELD WIPER ARM AND BLADE ASSEMBLY, page 271)**, Install Windshield Wiper Arm and Blade Assembly**.

35. Test operation of windshield wipers and washer, then clean windshield and surrounding area.

36. Close hood and latch hood on both sides.

IMPORTANT – To allow for the correct curing time of U400HV one part urethane adhesive, you will need to use the area on the Form Bonded Windshield Replacement Report (Figure 183) (See Figure 183, page 345) to record Time, Temperature and Humidity and follow the cure table for U400HV.

5.3. INSTALL REAR WINDOW GLASS AND WEATHER SEAL (EXCEPT SLEEPER MODELS)

Refer to Figure 155 (See Figure 155, page 243) for Items in parentheses.

A one-piece weather seal (Item 1) secures rear window glass (Item 2) to cab. Weather seal is molded to fit tightly over the window fence flange at edge of window opening so it secures glass in window opening.

NOTE – Because old weather seals are likely to be damaged, always install a new seal when replacing glass.

NOTE – Use only heat treated glass (AS–2 per ANSI Z26.1–Latest revision).

1. Clean remaining window seal from rear window fence. Apply soapy solution to window fence and channels of weather seal (Item 1) to ease installation. Locate vulcanized joint at top center of rear window opening, then install new weather seal around perimeter.

2. Install rear window glass (Item 2) from outside cab. Start glass into channels on driver's side (left) and push glass to the right (Item 3).

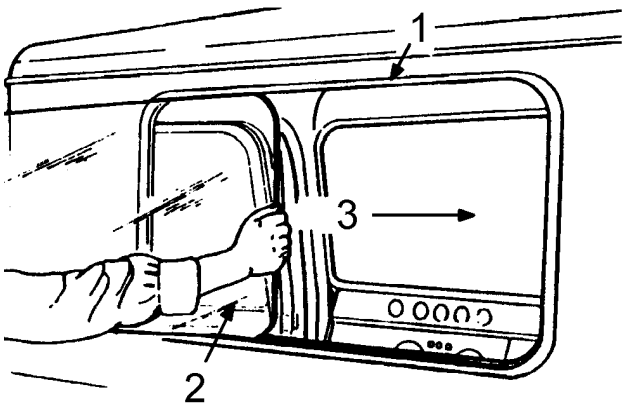

Figure 155 Install Rear Window Glass

1. WEATHER SEAL
2. REAR WINDOW GLASS
3. SLIDE WINDOW IN DIRECTION OF ARROW (FOR INSTALLATION)

Refer to Figure 156 for Items in parentheses.

3. Use a weather seal tool (Item 2) to seat edge of weather seal (Item 1) over the right side of glass. Then install left end of glass.

4. Insert weather seal tool (Item 2) into seal so it catches inner seal, then pull weather seal tool all the way around seal in direction of arrow (Item 3) to fully seat seal lip.

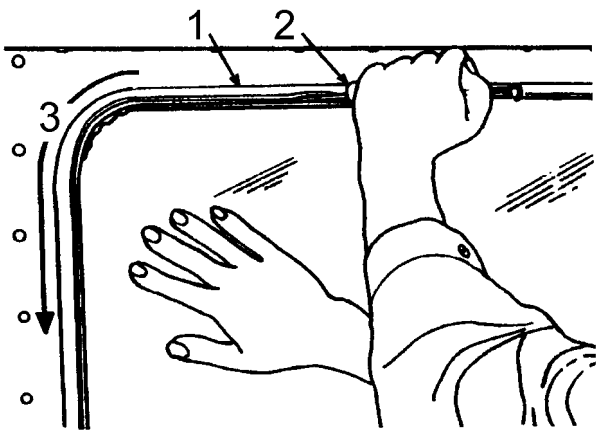

Figure 156 Seating Seal Lip

1. WEATHER SEAL
2. WEATHER SEAL TOOL
3. PULL TOOL IN DIRECTION OF ARROW

Refer to **SPECIAL SERVICE TOOLS** (See SPECIAL SERVICE TOOLS, page 364) for correct tool to install rear window glass.

NOTE – Do not over seal the lips (Figure 157) and (Figure 158) (See Figure 158, page 245). If the lips are over sealed, run the weather seal tool over area again.

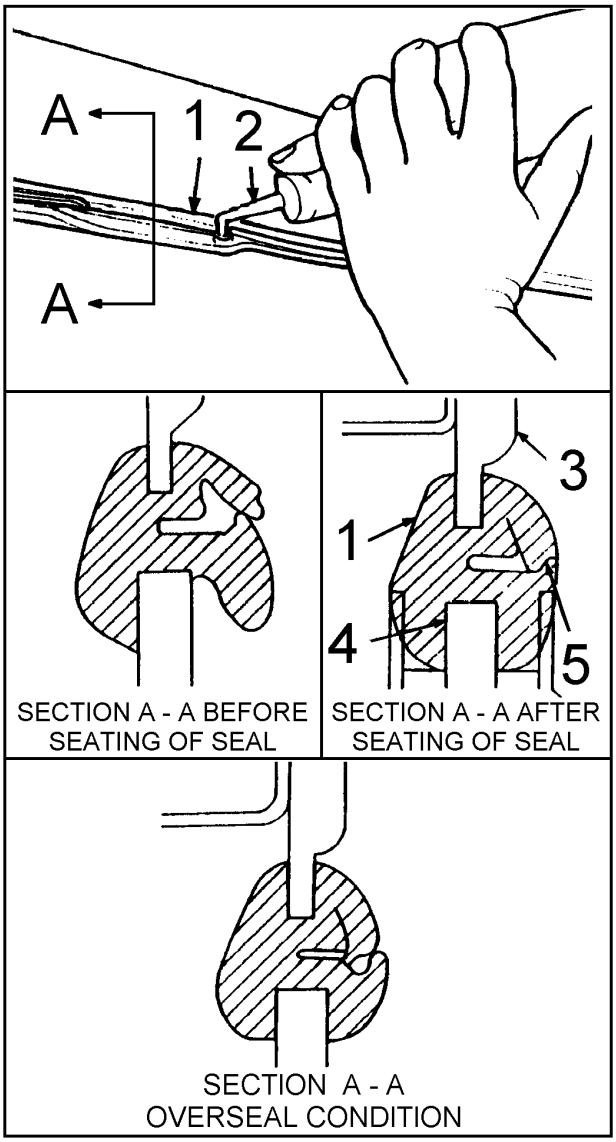

Figure 157 Fully Seat Seal Lip

1. WEATHER SEAL
2. WEATHER SEAL TOOL
3. WEATHER SEAL FENCE
4. REAR WINDOW GLASS
5. SEAL LIP INSTALLED

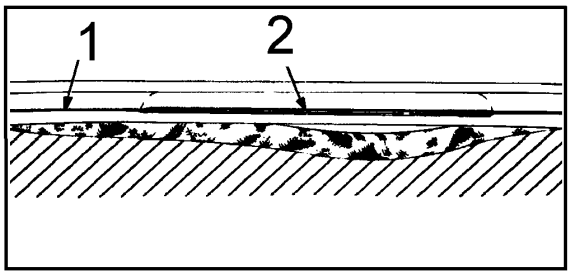

Figure 158 Seal Lip, Proper Seal or Overseal

1. PROPER SEAL
2. OVER SEAL

5.4. HOOD SEALS

Install Hood Seals for 5000*i* and 9000*i* Series

Refer to Figure 159 (See Figure 159, page 246) for Items in parentheses.

1. Check hood seal (Item 1) for cracks and tears. If damaged, replace it.

2. Position hood seal (Item 1) on cowl tray flange (Item 2) with hood seal mounting groove (Item 3) over cowl tray flange and push firmly down onto cowl tray flange.

3. Close hood and fasten latches on both sides of hood.

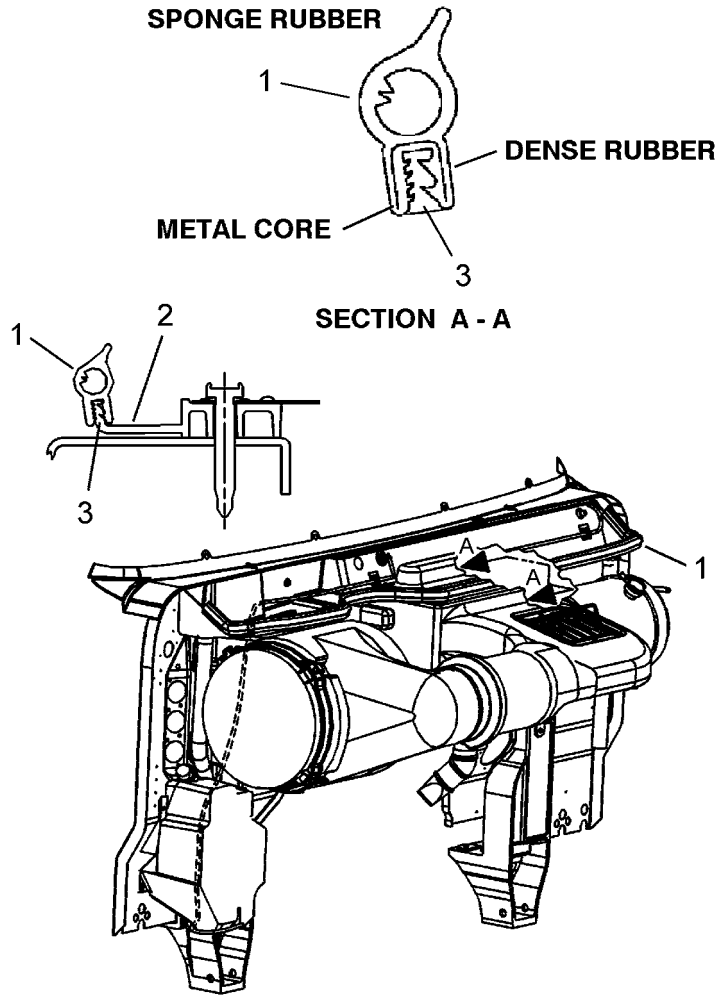

Figure 159 Installing Hood Seal

1. HOOD SEAL
2. COWL TRAY FLANGE
3. HOOD SEAL MOUNTING GROOVE

Install Hood Seals for 5000*i* SBA Series with Optional Butterfly Hood

Refer to Figure 16 (See Figure 16, page 19) for Items in parentheses unless otherwise noted.

1. Check cowl hood seal (Item 1) for cracks and tears. If damaged, replace it.

2. Position cowl hood seal (Item 1) on cowl tray flange (Item 3) with hood seal mounting groove positioned over cowl tray flange and push firmly down onto cowl tray flange. Also refer to (Items 1, 2 and 3, Figure 154) (See Figure 154, page 236) for cowl hood seal installation.

3. Check radiator shell hood seals (Item 4) and seal pads (Items 8 and 11) for cracks and tears. If damaged, replace them.

4. Position left or right side radiator shell hood seal (Item 4) on radiator shell flange (Item 5) and secure by aligning push-in fasteners starting with the first hole next to front hinge bracket (Item 12). Push the push-in fasteners through the radiator shell flange; use a small hammer and tap each fastener to ensure the seal stays secured. NOTE that the fourth and fifth holes (Item 14, circle A) and first and second holes (Item 15, circle B) from the top of radiator shell side seam will not be used. These holes are used while installing bracket with seal pad (Items 7 and 8, view in circle A) and (Items 10 and 11, view in circle B) . Repeat procedure to install the other radiator shell hood seal.

5. If seal pad (Item 8, view in circle A) or seal pad (Item 11, view in circle B) was removed from bracket (Item 7, view in circle A) or (Item 10, view in circle B), position new seal pad on bracket and install two push-in fasteners (Item 13, view in circle A and circle B) to secure it to the bracket.

6. Position bracket with seal pad (Items 7 and 8, view in circle A) under top of radiator shell flange (Item 5), and align holes in bracket (Item 7) with fourth and fifth holes (Item 14, circle A) from front hinge bracket (Item 12). Install two sheet metal screws with flat washers (Item 6) through the hood seal, radiator shell flange and bracket (Items 4, 5 and 7) and install speed nuts (Item 6) underneath bracket and tighten.

7. Position bracket with seal pad (Items 10 and 11, view in circle B) on the inside of the radiator shell flange (Item 5), and align holes in bracket (Item 10) with first and second holes (Item 15, circle B) from the top of radiator shell side seam. Install two sheet metal screws with flat washers (Item 9) through the radiator shell hood seal, radiator shell flange and bracket (Items 4, 5 and 10) and install speed nuts (Item 9) underneath bracket and tighten (driver side shown). Repeat for passenger side.

8. Close right and left side hoods and fasten both latches on each hood.

5.5. INSTALL SUN SHADE

Refer to Figure 17 (See Figure 17, page 20) for Items in parentheses.

1. Position sun shade (Item 3) at cab roof and connect wiring harness electrical connector (Item 8) to cab wiring harness connector coming from wiring harness hole (Item 7) in cab roof.

2. Position sun shade (Item 3) on cab roof and install three hex head flanged mounting screws (Item 4) through clearance light openings and attach sun shade to day cab roof (Item 5) or Pro-sleeper® roof (Item 6).

3. Position right and left side sun shade clearance lights (Item 1) and center sun shade clearance light (Item 2) onto sun shade (Item 3) and install mounting hardware attaching them to sun shade.

5.6. INSTALL SUN VISOR

Refer to Figure 18 (See Figure 18, page 21) for Items in parentheses.

1. Install sun visor assembly (Item 2) and secure with mounting screws (Item 4), securing visor support bracket (Item 5) to cab header.

2. Engage sun visor assembly (Item 2) into visor clip (Item 3, View A). Connect electrical connector and install “A" pillar cover (Item 1).

5.7. INSTALL IGNITION KEY SWITCH CYLINDER

The door lock and the ignition key switch are coded the same so that one key will operate both cylinders. The code number is stamped on the ignition key switch body just in back of the cap nut. The code number does not appear on the door lock assembly.

If the original key is desired when replacing the ignition key switch cylinder, code the new ignition key switch accordingly. Use the following steps:

Refer to Figure 160 for Items in parentheses.

1. Insert original key (Item 1) in new ignition key switch cylinder (Item 2). Before insertion into ignition key switch body, file off tumblers that protrude from cylinder. Make certain that no burrs are left on tumblers, and that all filings are blown out with compressed air.

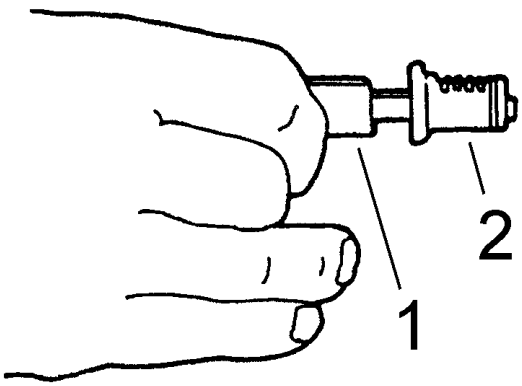

Figure 160 Original Key in New Ignition Key Switch Cylinder

1. ORIGINAL KEY
2. NEW IGNITION KEY SWITCH CYLINDER

Refer to Figure 24 (See Figure 24, page 26) for Items in parentheses.

2. To reinstall same ignition key switch cylinder, or to install a new ignition key switch cylinder (Item 1), apply a small quantity of powdered graphite to tumblers, then insert ignition key (Item 3) into ignition key switch cylinder. Rotate ignition key counterclockwise to accessory position and insert ignition key switch cylinder back into ignition key switch body (Item 2). Turn key to Off position and remove key.

Refer to Figure 21 (See Figure 21, page 24) for Items in parentheses.

3. Position ignition key switch (Item 2) at dash panel and connect electrical connector (Item 1) to back of ignition key switch.

Refer to Figure 20 (See Figure 20, page 23) for Items in parentheses.

4. Position ignition key switch (Item 2) up behind dash panel (Item 1) and insert it into dash panel opening.

Refer to Figure 19 (See Figure 19, page 22) for Items in parentheses.

5. With ignition key switch (Item 5) pushed through dash panel (Item 2) and positioned properly, install mounting cap nut (Item 4) securing it to dash panel. Tighten snugly.

6. Reinstall left side trim panel (Item 3) and install push-in fasteners and screws, then reinstall front trim panel (Item 1) underneath dash panel (Item 2) and install push-in fasteners and screws.

5.8. INSTRUMENT PANEL

Refer to Figure 25 (See Figure 25, page 27) for instrument panel locations of speedometer, tachometer, gauges and switches.

Install Electrically Operated Gauges, Mechanical Air Gauges and Speedometer/Tachometer

1. To install electrically operated gauges, mechanical air gauges, speedometer and tachometer, refer to **GROUP 08 – ELECTRICAL** in the **Master Service Manual**.

NOTE – To install radio bezel, place bezel in position and push (snap) onto radio. Then install face panel where the radio is located.

2. To access fuse panel or circuit breaker panel (optional) located behind glove box, open glove box, (Item 6, Figure 25) (See Figure 25, page 27), reach behind glove box from top and pull glove box stops inward to allow glove box to drop down out of the way. If more clearance is required, pull glove box stops inward, which will allow glove box to drop down past second stop.

5.9. INSTALL FLOOR MAT

Refer to Figure 26 (See Figure 26, page 28) for Items in parentheses.

1. Install floor mat (Item 4) and floor mat trim panels (Item 3).

2. Install driver and passenger seats (Item 2). Refer to **DRIVER AND PASSENGER SEATS**(See Install DRIVER AND PASSENGER SEATS, page 249)**, Install Driver and Passenger Seats**.

3. Install headlight dimmer switch on driver side and floor mat door scuff plates (Item 1) at both driver and passenger side.

5.10. INSTALL HEADLINER (DAY CAB MODELS ONLY)

Refer to Figure 27 (See Figure 27, page 29) for Items in parentheses.

1. Position headliner (Item 3) near cab roof and connect dome light electrical connector.

2. Install center dome light (Item 4) in headliner (Item 3) while supporting the headliner.

3. Insert push-in retainers (Item 2) to hold headliner to cab roof.

4. Position headliner trim moldings (Item 1) and install retaining screws.

5.11. INSTALL DRIVER AND PASSENGER SEATS

Individual air suspension driver and passenger seats, and mechanical passenger seats are available on this cab (Figure 29) (See Figure 29, page 30) and (Figure 30) (See Figure 30, page 31), with additional seat options available for driver. Both driver and passenger seats provide many seat and back rest adjustments to assure a comfortable ride.

Refer to seat manufacturer's information for additional seat specific details.

See base plate mounting details (Items 5 thru 9, Figure 29) (See Figure 29, page 30) for various driver seat types.

NOTE – Clean seat suspension and adjusters as required by wiping away any grease or dirt with shop towel. Apply a light coat of multipurpose lube to pivot points, sliding areas and rollers to assure a smooth operation on reinstallation. Wipe away excess lube.

1. Install driver seat assembly (Item 1, Figure 29) (See Figure 29, page 30) and secure seat pedestal to floor with 4 seat mounting bolts (Item 3, Figure 29) (See Figure 29, page 30). Tighten to 23 to 27 Lbf-ft (31 to 37 N•m).

2. Install passenger seat assembly (Item 1, Figure 30) (See Figure 30, page 31) and secure seat frame with 4 mounting bolts (Items 2 and 3, Figure 30) (See Figure 30, page 31). Tighten to 23 to 27 Lbf-ft (31 to 37 N•m).

3. Install seat belt brackets (Item 4, Figure 32) (See Figure 32, page 33) to each side of seat and install 2 mounting bolts each side. Tighten to 25 to 35 Lbf-ft (34 to 47 N•m).

4. Connect air lines, if so equipped. Make sure air lines do not rub suspension parts.

5. Check for air line leaks, if so equipped, and check seat operation.

5.12. INSTALL BACK PANEL

Refer to Figure 31 (See Figure 31, page 32) for Items in parentheses unless otherwise noted.

1. Position back panel (Item 2) behind seats.

2. Install retaining screws securing back panel (Item 2) to cab.

3. Position seat belt assembly D-ring (Item 3, Figure 32) (See Figure 32, page 33) at back panel and install seat belt shoulder bolt (Item 2, Figure 32) (See Figure 32, page 33) and tighten to 25 to 35 Lbf-ft (34 to 47 N•m).

4. Position rear window interior trim molding (Item 1) and install and tighten retaining screws.

5.13. INSTALL ENGINE COVER

Refer to Figure 33 (See Figure 33, page 34) and Figure 34 (See Figure 34, page 34) for Items in parentheses.

1. Position engine cover (Item 2) on cowl panel (Item 1).

2. Install retaining screws (Item 3) to secure engine cover (Item 2) in place.

5.14. CAB DOOR LOWER TRIM PANEL

Install Driver Side Cab Door Lower Trim Panel

Refer to Figure 35 (See Figure 35, page 35) for Items in parentheses.

1. Hold cab door lower trim panel (Item 3) near cab door and connect courtesy light cable connector (Item 5) to wiring harness courtesy light connector (Item 6). Position cab door lower trim panel on cab door and install seven pan head torx screws (Item 4) around outer edge of cab door lower trim panel.

2. If vehicle is equipped with manually operated door windows install window regulator handle and washer (Item 2) and install hex socket head mach. screw (Item 1).

Install Passenger Side Cab Door Lower Trim Panel

Refer to Figure 36 (See Figure 36, page 37) for Items in parentheses.

1. Hold cab door lower trim panel (Item 5) near cab door and connect courtesy light cable connector (Item 7) to wiring harness courtesy light connector (Item 8). Position cab door lower trim panel on cab door and install seven pan head torx screws (Item 6) around outer edge of cab door lower trim panel.

2. If vehicle is equipped with manually operated door windows install window regulator handle and washer (Item 2) and install hex socket head mach. screw (Item 1).

3. Position passenger door inner view glass assembly (Item 4) into cab door lower trim panel (Item 5) and install four mounting screws (Item 3) to secure it.

5.15. CAB DOOR COURTESY LIGHT ASSEMBLY

Install Driver Side Cab Door Courtesy Light Assembly

Refer to Figure 35 (See Figure 35, page 35) for Items in parentheses.

1. Position courtesy light assembly (Item 8) in place in cab door lower trim panel (Item 3) and install courtesy light mounting screws (Item 7) and tighten.

2. Hold cab door lower trim panel (Item 3) near cab door and connect courtesy light cable connector (Item 5) to wiring harness courtesy light connector (Item 6). Position cab door lower trim panel on cab door and install seven pan head torx screws (Item 4) around outer edge of cab door lower trim panel.

3. If vehicle is equipped with manually operated door windows install window regulator handle and washer (Item 2) and install hex socket head mach. screw (Item 1).

Install Passenger Side Cab Door Courtesy Light Assembly

Refer to Figure 36 (See Figure 36, page 37) for Items in parentheses.

1. Position courtesy light assembly (Item 10) in place in cab door lower trim panel (Item 5) and install courtesy light mounting screws (Item 9) and tighten.

2. Hold cab door lower trim panel (Item 5) near cab door and connect courtesy light cable connector (Item 7) to wiring harness courtesy light connector (Item 8). Position cab door lower trim panel on cab door and install seven pan head torx screws (Item 6) around outer edge of cab door lower trim panel.

3. If vehicle is equipped with manually operated door windows install window regulator handle and washer (Item 2) and install hex socket head mach. screw (Item 1).

4. Position passenger door inner view glass assembly (Item 4) into cab door lower trim panel (Item 5) and install four mounting screws (Item 3) to secure it.

5.16. UPPER DOOR TRIM/INNER DOOR PANEL AND WINDOW REGULATOR ASSEMBLY

Install Driver Side Upper Door Trim/Inner Door Panel and Window Regulator Assembly

NOTE – If door has electrically controlled windows, door locks, mirrors, heated mirrors or CB antenna and door wiring harness was replaced, connect wiring harness connectors to install upper door trim/inner door panel and window regulator assembly as described below.

Refer to Figure 44 (See Figure 44, page 46) for Items in parentheses unless otherwise noted.

1. Hold upper door trim/inner door panel and window regulator assembly (Item 3) at cab door and carefully feed each connector of cab door electrical cable (Item 1) through cab door hinge grommet and cab door hinge. Each connector will have to be fed through separately; pull electrical cable through completely.

2. Once cab door electrical cable (Item 1) has been pulled completely through cab door hinge grommet and cab door hinge, carefully feed each connector of cab door electrical cable through cab hinge pillar and plastic grommet into cab side panel. Each connector will have to be fed through separately.

3. Now carefully feed mirror electrical cable (Item 2) through opening in mirror mounting bracket and cab door (Item 4, Figure 42) (See Figure 42, page 44). Each connector will have to be fed through separately. Pull electrical cable completely through cab door and mirror mounting bracket.

Refer to Figure 43 (See Figure 43, page 45) for Items in parentheses.

4. Hold upper door trim/inner door panel and window regulator assembly (Item 1) away from cab door and install inner door handle control rod (Item 6) into door latch inner door handle control rod (Item 7) from door latch assembly (Item 4) and slide retaining clip (Item 5) onto inner door handle control rod to secure them together.

5. While holding upper door trim/inner door panel and window regulator assembly (Item 1) away from cab door, connect cab door courtesy light switch connector (Item 8) to cab door courtesy light switch.

Refer to Figure 41 (See Figure 41, page 43) for Items in parentheses.

6. Place upper door trim/inner door panel and window regulator assembly (Item 3) over door lock control rod (Item 2) and slide down into position on cab door.

7. Hold upper door trim/inner door panel and window regulator assembly (Item 3) onto cab door and install six pan head torx screws (Item 11) securing it to cab door.

Refer to Figure 42 (See Figure 42, page 44) for Items in parentheses.

8. Connect electrical cable connectors (Item 2) as required, such as CB cable connector, and if so equipped, electric mirror and/or heated mirror connectors. Coil up excess cable and using a tywrap (Item 5) bundle them together so as to contain them inside lower mirror mounting bracket. Install lower mirror mounting bracket plastic cover (Item 1).

Refer to Figure 41 (See Figure 41, page 43) for Items in parentheses unless otherwise noted.

9. Through access opening in inner door panel (Item 6) install electric door lock control rod of electric door lock actuator (Item 9) into electric door lock control rod (Item 10) and slide retaining clip (Item 8) onto lock control rod of electric door lock actuator.

10. Install door lock knob (Item 1) onto door lock control rod (Item 2) sticking through opening in upper door trim/inner door panel and window regulator assembly (Item 3).

11. Install two hex head mach. screws (Item 5) through oval opening in center of inner door panel (Item 6) securing window regulator assembly to window regulator bracket on window.

12. If vehicle window is manually operated, use window regulator handle (Item 2, Figure 35) (See Figure 35, page 35) and raise window and remove wood block (Item 7), 12.5 inches long, through opening in inner door panel (Item 6).

Refer to Figure 40 (See Figure 40, page 42) for Items in parentheses.

13. Position cab door check strap (Item 2) on cab door frame (Item 3) and install two pan head mach. screws (Item 1).

Refer to Figure 39 (See Figure 39, page 41) for Items in parentheses.

14. Carefully pull electrical cable and connectors (Item 1) through side of cab (Item 2) as far as it will go.

Refer to Figure 38 (See Figure 38, page 40) for Items in parentheses.

15. Reach under dash panel and connect courtesy light connector (Item 1) and CB cable connector (Item 2), if so equipped, connect electric window connector (Item 3) and electric door lock connector (Item 4). If vehicle is equipped with heated mirrors and/or electric mirrors, connect connectors for them also.

Refer to Figure 37 (See Figure 37, page 39) for Items in parentheses.

16. Position cab side insulator panel (Item 6) on driver side in place and install one black plastic trim fastener (Item 7) in top flange, then install two self tapping pan head screws and washers (Item 8).

17. Position dimmer switch (Item 5) in place and install two pan head screws (Item 4) to secure it.

18. Position cab front insulator panel (Item 1) under instrument panel and install two black plastic trim fasteners (Item 2) in top flange, then install one self tapping pan head screw and washer (Item 3).

Refer to Figure 41 (See Figure 41, page 43) for Items in parentheses.

19. If vehicle has electric windows use electric window switch to raise window and remove wood block (Item 7), 12.5 inches long, through opening in inner door panel (Item 6).

20. Install cab door lower trim panel onto cab door. Refer to **CAB DOOR LOWER TRIM PANEL** (See CAB DOOR LOWER TRIM PANEL, page 250)**, Install Driver Side Cab Door Lower Trim Panel**.

Install Passenger Side Upper Door Trim/Inner Door Panel and Window Regulator Assembly

NOTE – If door has electrically controlled windows, door locks, mirrors, heated mirrors or CB antenna and door wiring harness was replaced, connect wiring harness connectors to install upper door trim/inner door panel and window regulator assembly as described below.

Refer to Figure 52 (See Figure 52, page 54) for Items in parentheses unless otherwise noted.

1. Hold upper door trim/inner door panel and window regulator assembly (Item 3) at cab door and carefully feed each connector of cab door electrical cable (Item 1) through cab door hinge grommet and cab door hinge. Each connector will have to be fed through separately; pull electrical cable through completely.

2. Once cab door electrical cable (Item 1) has been pulled completely through cab door hinge grommet and cab door hinge, carefully feed each connector of cab door electrical cable through cab hinge pillar and plastic grommet into cab side panel. Each connector will have to be fed through separately.

3. Now carefully feed mirror electrical cable (Item 2) through opening in mirror mounting bracket and cab door (Item 4, Figure 50) (See Figure 50, page 52). Each connector will have to be fed through separately; pull electrical cable completely through cab door and mirror mounting bracket.

Refer to Figure 51 (See Figure 51, page 53) for Items in parentheses.

4. Hold upper door trim/inner door panel and window regulator assembly (Item 1) away from cab door and install inner door handle control rod (Item 6) into door latch inner door handle control rod (Item 7) from door latch assembly (Item 4) and slide retaining clip (Item 5) onto inner door handle control rod to secure them together.

5. While holding upper door trim/inner door panel and window regulator assembly (Item 1) away from cab door, connect cab door courtesy light switch connector (Item 8) to cab door courtesy light switch.

Refer to Figure 49 (See Figure 49, page 51) for Items in parentheses.

6. Place upper door trim/inner door panel and window regulator assembly (Item 3) over door lock control rod (Item 2) and slide down into position on cab door.

7. Hold upper door trim/inner door panel and window regulator assembly (Item 3) onto cab door and install six pan head torx screws (Item 11) securing it to cab door.

Refer to Figure 50 (See Figure 50, page 52) for Items in parentheses.

8. Connect electrical cable connectors (Item 2) as required, such as CB cable connector, and if so equipped, electric mirror and/or heated mirror connectors. Coil up excess cable and using a tywrap (Item 5) bundle them together so as to contain them inside lower mirror mounting bracket. Install lower mirror mounting bracket plastic cover (Item 1).

Refer to Figure 49 (See Figure 49, page 51) for Items in parentheses unless otherwise noted.

9. Through access opening in inner door panel (Item 6) install electric door lock control rod of electric door lock actuator (Item 9) into electric door lock control rod (Item 10) and slide retaining clip (Item 8) onto lock control rod of electric door lock actuator.

10. Install door lock knob (Item 1) onto door lock control rod (Item 2) sticking through opening in upper door trim/inner door panel and window regulator assembly (Item 3).

11. Install two hex head mach. screws (Item 5) through oval opening in center of inner door panel (Item 6) securing window regulator assembly to window regulator bracket on window.

12. If vehicle window is manually operated, use window regulator handle (Item 2, Figure 36) (See Figure 36, page 37) and raise window and remove wood block (Item 7), 12.5 inches long, through opening in inner door panel (Item 6).

Refer to Figure 48 (See Figure 48, page 50) for Items in parentheses.

13. Position cab door check strap (Item 2) on cab door frame (Item 3) and install two pan head mach. screws (Item 1).

Refer to Figure 47 (See Figure 47, page 49) for Items in parentheses.

14. Carefully pull electrical cable and connectors (Item 1) through side of cab (Item 2) as far as it will go.

Refer to Figure 46 (See Figure 46, page 48) for Items in parentheses.

15. Reach under dash panel and connect courtesy light connector (Item 1) and CB cable connector (Item 2). If so equipped, connect electric window connector (Item 3) and electric door lock connector (Item 4). If vehicle is equipped with heated mirrors and/or electric mirrors, connect connectors for them also.

Refer to Figure 45 (See Figure 45, page 47) for Items in parentheses.

16. Position cab side insulator panel (Item 4) on passenger side in place and install two self tapping pan head screws and washers (Item 5).

17. Position cab front insulator panel (Item 1) on passenger side under instrument panel and install three black plastic trim fasteners (Item 2), then install four self tapping pan head screws and washers (Item 3).

Refer to Figure 49 (See Figure 49, page 51) for Items in parentheses.

18. If vehicle has electric windows use electric window switch to raise window and remove wood block (Item 7), 12.5 inches long, through opening in inner door panel (Item 6).

19. Install cab door lower trim panel onto cab door. Refer to **CAB DOOR LOWER TRIM PANEL** (See CAB DOOR LOWER TRIM PANEL, page 250)**, Install Passenger Side Cab Door Lower Trim Panel**.

5.17. CAB DOOR AND HINGE

Install Driver Side Cab Door Hinge

Refer to Figure 53 (See Figure 53, page 56) for Items in parentheses.

1. If cab door hinge (Item 7) was removed from cab hinge pillar (Item 8), position cab door hinge on cab hinge pillar. Align cab door hinge with scribe marks on cab hinge pillar and secure it with six hex flanged head bolts (Item 9) (top three hex flanged head bolts shown). Install three hex flanged head bolts at bottom of hinge (not shown). Tighten to 180 Lbf-in (20 N•m).

Install Driver Side Cab Door

1. Use a sling or padded chain through top of window opening and attach sling to an overhead hoist to support door.

NOTE – If the door has electrically controlled windows, heated mirrors, courtesy light or CB antenna, reconnect wiring.

Refer to Figure 53 (See Figure 53, page 56) for Items in parentheses.

2. Position cab door (Item 3) in place at cab door hinge (Item 4) and feed cab door courtesy light switch connector (Item 5) through hole in cab door hinge.

3. Position cab door (Item 3) in place against cab door hinge (Item 4) on cab hinge pillar (Item 8) and install six hex flanged head bolts (Item 6) (top three hex flanged head bolts shown). Install three hex flanged head bolts at bottom of hinge (not shown), securing it to cab door hinge. Tighten cab door hinge bolts to 180 Lbf-in (20 N•m).

4. Once cab door (Item 3) is secured to cab door hinge (Item 4) place plastic washer over cab door courtesy light switch connector (Item 5). Connect cab door courtesy light switch (Item 1) to cab door courtesy light switch connector and thread cab door courtesy light switch into cab door hinge and cab door by turning cab door courtesy light switch hex nut (Item 2) until tight.

5. If adjustment is required to align cab door to cab door opening for proper fit after reinstalling cab door, refer to **ADJUSTMENTS, CAB DOOR HINGE** (See CAB DOOR HINGE, page 343).

Refer to Figure 40 (See Figure 40, page 42) for Items in parentheses.

6. Position cab door check strap (Item 2) on cab door frame (Item 3) and install two pan head mach. screws (Item 1).

Refer to Figure 39 (See Figure 39, page 41) for Items in parentheses.

7. Carefully feed each connector of cab door electrical cable (Item 1) through cab hinge pillar (Item 3) and cab hinge pillar grommet (Item 4) into cab side panel (Item 2); each connector will have to be fed through separately.

8. Reach into side of cab and carefully pull electrical cable and connectors (Item 1) through side of cab (Item 2) as far as it will go.

Refer to Figure 38 (See Figure 38, page 40) for Items in parentheses.

9. Reach under dash panel and connect courtesy light connector (Item 1) and CB cable connector (Item 2). If so equipped, connect electric window connector (Item 3) and electric door lock connector (Item 4). If vehicle is equipped with heated mirrors and/or electric mirrors, connect connectors for them also.

Refer to Figure 37 (See Figure 37, page 39) for Items in parentheses.

10. Position cab side insulator panel (Item 6) on driver side in place and install one black plastic trim fastener (Item 7) in top flange, then install two self tapping pan head screws and washers (Item 8).

11. Position dimmer switch (Item 5) in place and install two pan head screws (Item 4) to secure it.

12. Position cab front insulator panel (Item 1) under instrument panel and install two black plastic trim fasteners (Item 2) in top flange, then install one self tapping pan head screw and washer (Item 3).

Install Passenger Side Cab Door Hinge

Refer to Figure 54 (See Figure 54, page 58) for Items in parentheses.

1. If cab door hinge (Item 7) was removed from cab hinge pillar (Item 8), position cab door hinge on cab hinge pillar. Align cab door hinge with scribe marks on cab hinge pillar and secure it with six hex flanged head bolts (Item 9) (top three hex flanged head bolts shown). Install three hex flanged head bolts at bottom of hinge (not shown). Tighten to 180 Lbf-in (20 N•m).

Install Passenger Side Cab Door

1. Use a sling or padded chain through top of window opening and attach sling to an overhead hoist to support door.

NOTE – If the door has electrically controlled windows, heated mirrors, courtesy light or CB antenna, reconnect wiring.

Refer to Figure 54 (See Figure 54, page 58) for Items in parentheses.

2. Position cab door (Item 3) in place at cab door hinge (Item 4) and feed cab door courtesy light switch connector (Item 5) through hole in cab door hinge.

3. Position cab door (Item 3) in place against cab door hinge (Item 4) on cab hinge pillar (Item 8) and install six hex flanged head bolts (Item 6) (top three hex flanged head bolts shown). Install three hex flanged head bolts at bottom of hinge (not shown), securing it to cab door hinge. Tighten cab door hinge bolts to 180 Lbf-in (20 N•m).

4. Once cab door (Item 3) is secured to cab door hinge (Item 4) place plastic washer over cab door courtesy light switch connector (Item 5). Connect cab door courtesy light switch (Item 1) to cab door courtesy light switch connector and thread cab door courtesy light switch into cab door hinge and cab door by turning cab door courtesy light switch hex nut (Item 2) until tight.

5. If adjustment is required to align cab door to cab door opening for proper fit after reinstalling cab door, refer to **ADJUSTMENTS, CAB DOOR HINGE** (See CAB DOOR HINGE, page 343).

Refer to Figure 48 (See Figure 48, page 50) for Items in parentheses.

6. Position cab door check strap (Item 2) on cab door frame (Item 3) and install two pan head mach. screws (Item 1).

Refer to Figure 47 (See Figure 47, page 49) for Items in parentheses.

7. Carefully feed each connector of cab door electrical cable (Item 1) through cab hinge pillar (Item 3) and cab hinge pillar grommet (Item 4) into cab side panel (Item 2); each connector will have to be fed through separately.

8. Reach into side of cab and carefully pull electrical cable and connectors (Item 1) through side of cab (Item 2) as far as it will go.

Refer to Figure 46 (See Figure 46, page 48) for Items in parentheses.

9. Reach under dash panel and connect courtesy light connector (Item 1) and CB cable connector (Item 2). If so equipped, connect electric window connector (Item 3) and electric door lock connector (Item 4). If vehicle is equipped with heated mirrors and/or electric mirrors, connect connectors for them also.

Refer to Figure 45 (See Figure 45, page 47) for Items in parentheses.

10. Position cab side insulator panel (Item 4) on passenger side in place and install two self tapping pan head screws and washers (Item 5).

11. Position cab front insulator panel (Item 1) on passenger side under instrument panel and install three black plastic trim fasteners (Item 2), then install four self tapping pan head screws and washers (Item 3).

5.18. INNER DOOR HANDLE

Install Driver Side Inner Door Handle

Refer to Figure 55 (See Figure 55, page 60) for Items in parentheses.

1. If inner door handle (Item 3) was replaced, install inner door handle control rod (Item 2) into inner door handle and slide retaining clip (Item 1) over inner door handle control rod to secure it.

2. Position inner door handle (Item 3) and inner door handle control rod (Item 2) through opening in upper door trim/inner door panel and window regulator assembly (Item 6). Position inner door handle mounting bracket (Item 5) on back side upper door trim/inner door panel and window regulator assembly and install two hex nuts and washers (Item 4) onto threaded studs and tighten.

3. Install upper door trim/inner door panel and window regulator assembly onto cab door. Refer to **UPPER DOOR TRIM/INNER DOOR PANEL AND WINDOW REGULATOR ASSEMBLY** (See UPPER DOOR TRIM/INNER DOOR PANEL AND WINDOW REGULATOR ASSEMBLY, page 252)**, Install Driver Side Upper Door Trim/Inner Door Panel and Window Regulator Assembly**.

4. Install cab door lower trim panel onto cab door. Refer to **CAB DOOR LOWER TRIM PANEL** (See CAB DOOR LOWER TRIM PANEL, page 250)**, Install Driver Side Cab Door Lower Trim Panel**.

Install Passenger Side Inner Door Handle

Refer to Figure 56 (See Figure 56, page 61) for Items in parentheses.

1. If inner door handle (Item 3) was replaced, install inner door handle control rod (Item 2) into inner door handle and slide retaining clip (Item 1) over inner door handle control rod to secure it.

2. Position inner door handle (Item 3) and inner door handle control rod (Item 2) through opening in upper door trim/inner door panel and window regulator assembly (Item 6). Position inner door handle mounting bracket (Item 5) on back side upper door trim/inner door panel and window regulator assembly and install two hex nuts and washers (Item 4) onto threaded studs and tighten.

3. Install upper door trim/inner door panel and window regulator assembly onto cab door. Refer to **UPPER DOOR TRIM/INNER DOOR PANEL AND WINDOW REGULATOR ASSEMBLY** (See UPPER DOOR TRIM/INNER DOOR PANEL AND WINDOW REGULATOR ASSEMBLY, page 252)**, Install Passenger Side Upper Door Trim/Inner Door Panel and Window Regulator Assembly**.

4. Install cab door lower trim panel onto cab door. Refer to **CAB DOOR LOWER TRIM PANEL** (See CAB DOOR LOWER TRIM PANEL, page 250)**, Install Passenger Side Cab Door Lower Trim Panel**.

5.19. CAB DOOR GRAB HANDLE

Install Driver Side Cab Door Grab Handle

Refer to Figure 57 (See Figure 57, page 62) for Items in parentheses.

1. Position cab door grab handle (Item 3) onto upper door trim panel (Item 4) and install three hex flanged head bolts (Item 1) from back side of inner door panel (Item 2) and tighten.

2. Install upper door trim/inner door panel and window regulator assembly onto cab door. Refer to **UPPER DOOR TRIM/INNER DOOR PANEL AND WINDOW REGULATOR ASSEMBLY** (See UPPER DOOR

TRIM/INNER DOOR PANEL AND WINDOW REGULATOR ASSEMBLY, page 252)**, Install Driver Side Upper Door Trim/Inner Door Panel and Window Regulator Assembly**.

3. Install cab door lower trim panel onto cab door. Refer to **CAB DOOR LOWER TRIM PANEL** (See CAB DOOR LOWER TRIM PANEL, page 250)**, Install Driver Side Cab Door Lower Trim Panel**.

Install Passenger Side Cab Door Grab Handle

Refer to Figure 58 (See Figure 58, page 63) for Items in parentheses.

1. Position cab door grab handle (Item 3) onto upper door trim panel (Item 4) and install three hex flanged head bolts (Item 1) from back side of inner door panel (Item 2) and tighten.

2. Install upper door trim/inner door panel and window regulator assembly onto cab door. Refer to **UPPER DOOR TRIM/INNER DOOR PANEL AND WINDOW REGULATOR ASSEMBLY** (See UPPER DOOR TRIM/INNER DOOR PANEL AND WINDOW REGULATOR ASSEMBLY, page 252)**, Install Passenger Side Upper Door Trim/Inner Door Panel and Window Regulator Assembly**.

3. Install cab door lower trim panel onto cab door. Refer to **CAB DOOR LOWER TRIM PANEL** (See CAB DOOR LOWER TRIM PANEL, page 250)**, Install Passenger Side Cab Door Lower Trim Panel**.

5.20. ELECTRIC WINDOW AND/OR ELECTRIC DOOR LOCK SWITCH ASSEMBLY

Install Driver Side Electric Window and/or Electric Door Lock Switch Assembly

Refer to Figure 59 (See Figure 59, page 64) for Items in parentheses unless otherwise noted.

1. Position electric window and/or electric door lock switch assembly (Item 1) into place on upper door trim panel (Item 3) and install two pan head mach. screws (Item 2) and tighten. Then connect electric window and/or electric door lock switch connectors (Item 7, Figure 55) (See Figure 55, page 60) to back of electric window and/or electric door lock switch assembly.

2. Install upper door trim/inner door panel and window regulator assembly onto cab door. Refer to **UPPER DOOR TRIM/INNER DOOR PANEL AND WINDOW REGULATOR ASSEMBLY** (See UPPER DOOR TRIM/INNER DOOR PANEL AND WINDOW REGULATOR ASSEMBLY, page 252)**, Install Driver Side Upper Door Trim/Inner Door Panel and Window Regulator Assembly**.

3. Install cab door lower trim panel onto cab door. Refer to **CAB DOOR LOWER TRIM PANEL** (See CAB DOOR LOWER TRIM PANEL, page 250)**, Install Driver Side Cab Door Lower Trim Panel**.

Install Passenger Side Electric Window and/or Electric Door Lock Switch Assembly

Refer to Figure 60 (See Figure 60, page 65) for Items in parentheses unless otherwise noted.

1. Position electric window and/or electric door lock switch assembly (Item 1) into place on upper door trim panel (Item 3) and install two pan head mach. screws (Item 2) and tighten. Then connect electric window and/or electric door lock switch connectors (Item 7, Figure 56) (See Figure 56, page 61) to back of electric window and/or electric door lock switch assembly.

2. Install upper door trim/inner door panel and window regulator assembly onto cab door. Refer to **UPPER DOOR TRIM/INNER DOOR PANEL AND WINDOW REGULATOR ASSEMBLY** (See UPPER DOOR TRIM/INNER DOOR PANEL AND WINDOW REGULATOR ASSEMBLY, page 252)**, Install Passenger Side Upper Door Trim/Inner Door Panel and Window Regulator Assembly**.

3. Install cab door lower trim panel onto cab door. Refer to **CAB DOOR LOWER TRIM PANEL** (See CAB DOOR LOWER TRIM PANEL, page 250)**, Install Passenger Side Cab Door Lower Trim Panel**.

5.21. UPPER DOOR TRIM PANEL

Install Driver Side Upper Door Trim Panel

Refer to Figure 59 (See Figure 59, page 64) for Items in parentheses.

1. Position upper door trim panel (Item 3) in place on front side of inner door panel (Item 6) and align two flat dome pine tree trim push-in fasteners (Item 5) with mounting holes on inner door panel and push both flat dome pine tree trim push-in fasteners through inner door panel.

2. Install cab door grab handle onto upper door trim panel. Refer to **CAB DOOR GRAB HANDLE** (See CAB DOOR GRAB HANDLE, page 258)**, Install Driver Side Cab Door Grab Handle**.

3. If vehicle is so equipped, install electric window and/or electric door lock switch assembly onto upper door trim panel. Refer to **ELECTRIC WINDOW AND/OR ELECTRIC DOOR LOCK SWITCH ASSEMBLY** (See ELECTRIC WINDOW AND/OR ELECTRIC DOOR LOCK SWITCH ASSEMBLY, page 259)**, Install Driver Side Electric Window and/or Electric Door Lock Switch Assembly**.

4. Install inner door handle onto upper door trim/inner door panel and window regulator assembly. Refer to **INNER DOOR HANDLE** (See INNER DOOR HANDLE, page 258)**, Install Driver Side Inner Door Handle**.

5. Install upper door trim/inner door panel and window regulator assembly onto cab door. Refer to **UPPER DOOR TRIM/INNER DOOR PANEL AND WINDOW REGULATOR ASSEMBLY** (See UPPER DOOR TRIM/INNER DOOR PANEL AND WINDOW REGULATOR ASSEMBLY, page 252)**, Install Driver Side Upper Door Trim/Inner Door Panel and Window Regulator Assembly**.

6. Install cab door lower trim panel onto cab door. Refer to **CAB DOOR LOWER TRIM PANEL** (See CAB DOOR LOWER TRIM PANEL, page 250)**, Install Driver Side Cab Door Lower Trim Panel**.

Install Passenger Side Upper Door Trim Panel

Refer to Figure 60 (See Figure 60, page 65) for Items in parentheses.

1. Position upper door trim panel (Item 3) in place on front side of inner door panel (Item 6) and align two flat dome pine tree trim push-in fasteners (Item 5) with mounting holes on inner door panel and push both flat dome pine tree trim push-in fasteners through inner door panel.

2. Install cab door grab handle onto upper door trim panel. Refer to **CAB DOOR GRAB HANDLE** (See CAB DOOR GRAB HANDLE, page 258)**, Install Passenger Side Cab Door Grab Handle**.

3. If vehicle is so equipped, install electric window and/or electric door lock switch assembly onto upper door trim panel. Refer to **ELECTRIC WINDOW AND/OR ELECTRIC DOOR LOCK SWITCH ASSEMBLY** (See ELECTRIC WINDOW AND/OR ELECTRIC DOOR LOCK SWITCH ASSEMBLY, page 259)**, Install Passenger Side Electric Window and/or Electric Door Lock Switch Assembly**.

4. Install inner door handle onto upper door trim/inner door panel and window regulator assembly. Refer to **INNER DOOR HANDLE** (See INNER DOOR HANDLE, page 258)**, Install Passenger Side Inner Door Handle**.

5. Install upper door trim/inner door panel and window regulator assembly onto cab door. Refer to **UPPER DOOR TRIM/INNER DOOR PANEL AND WINDOW REGULATOR ASSEMBLY** (See UPPER DOOR

TRIM/INNER DOOR PANEL AND WINDOW REGULATOR ASSEMBLY, page 252)**, Install Passenger Side Upper Door Trim/Inner Door Panel and Window Regulator Assembly**.

6. Install cab door lower trim panel onto cab door. Refer to **CAB DOOR LOWER TRIM PANEL** (See CAB DOOR LOWER TRIM PANEL, page 250)**, Install Passenger Side Cab Door Lower Trim Panel**.

5.22. WINDOW REGULATOR ASSEMBLY

Install Driver Side Electric Window Regulator Assembly with Power Window Motor

Refer to Figure 61 (See Figure 61, page 68) for Items in parentheses.

1. Position electric window regulator assembly (Item 6) onto back side of inner door panel (Item 3) and install ten hex head mach. screws (Item 4) from front side of inner door panel (Item 5) and tighten.

2. Connect electric window regulator motor connector (Item 1) onto electric window regulator motor (Item 2) on back side of inner door panel (Item 3).

Refer to Figure 59 (See Figure 59, page 64) for Items in parentheses.

3. Position upper door trim panel (Item 3) in place on front side of inner door panel (Item 6) and align two flat dome pine tree trim push-in fasteners (Item 5) with mounting holes on inner door panel and push both flat dome pine tree trim push-in fasteners through inner door panel.

4. Install cab door grab handle onto upper door trim panel. Refer to **CAB DOOR GRAB HANDLE** (See CAB DOOR GRAB HANDLE, page 258)**, Install Driver Side Cab Door Grab Handle**.

5. If vehicle is so equipped, install electric window and/or electric door lock switch assembly onto upper door trim panel. Refer to **ELECTRIC WINDOW AND/OR ELECTRIC DOOR LOCK SWITCH ASSEMBLY** (See ELECTRIC WINDOW AND/OR ELECTRIC DOOR LOCK SWITCH ASSEMBLY, page 259)**, Install Driver Side Electric Window and/or Electric Door Lock Switch Assembly**.

6. Install inner door handle onto upper door trim/inner door panel and window regulator assembly. Refer to **INNER DOOR HANDLE** (See INNER DOOR HANDLE, page 258)**, Install Driver Side Inner Door Handle**.

7. Install upper door trim/inner door panel and window regulator assembly onto cab door. Refer to **UPPER DOOR TRIM/INNER DOOR PANEL AND WINDOW REGULATOR ASSEMBLY** (See UPPER DOOR TRIM/INNER DOOR PANEL AND WINDOW REGULATOR ASSEMBLY, page 252)**, Install Driver Side Upper Door Trim/Inner Door Panel and Window Regulator Assembly**.

8. Install cab door lower trim panel onto cab door. Refer to **CAB DOOR LOWER TRIM PANEL** (See CAB DOOR LOWER TRIM PANEL, page 250)**, Install Driver Side Cab Door Lower Trim Panel**.

Install Passenger Side Electric Window Regulator Assembly with Power Window Motor

Refer to Figure 62 (See Figure 62, page 70) for Items in parentheses.

1. Position electric window regulator assembly (Item 6) onto back side of inner door panel (Item 3) and install ten hex head mach. screws (Item 4) from front side of inner door panel (Item 5) and tighten.

2. Connect electric window regulator motor connector (Item 1) onto electric window regulator motor (Item 2) on back side of inner door panel (Item 3).

Refer to Figure 60 (See Figure 60, page 65) for Items in parentheses.

3. Position upper door trim panel (Item 3) in place on front side of inner door panel (Item 6) and align two flat dome pine tree trim push-in fasteners (Item 5) with mounting holes on inner door panel and push both flat dome pine tree trim push-in fasteners through inner door panel.

4. Install cab door grab handle onto upper door trim panel. Refer to **CAB DOOR GRAB HANDLE** (See CAB DOOR GRAB HANDLE, page 258)**, Install Passenger Side Cab Door Grab Handle**.

5. If vehicle is so equipped, install electric window and/or electric door lock switch assembly onto upper door trim panel. Refer to **ELECTRIC WINDOW AND/OR ELECTRIC DOOR LOCK SWITCH ASSEMBLY** (See ELECTRIC WINDOW AND/OR ELECTRIC DOOR LOCK SWITCH ASSEMBLY, page 259)**, Install Passenger Side Electric Window and/or Electric Door Lock Switch Assembly**.

6. Install inner door handle onto upper door trim/inner door panel and window regulator assembly. Refer to **INNER DOOR HANDLE** (See INNER DOOR HANDLE, page 258)**, Install Passenger Side Inner Door Handle**.

7. Install upper door trim/inner door panel and window regulator assembly onto cab door. Refer to **UPPER DOOR TRIM/INNER DOOR PANEL AND WINDOW REGULATOR ASSEMBLY** (See UPPER DOOR TRIM/INNER DOOR PANEL AND WINDOW REGULATOR ASSEMBLY, page 252)**, Install Passenger Side Upper Door Trim/Inner Door Panel and Window Regulator Assembly**.

8. Install cab door lower trim panel onto cab door. Refer to **CAB DOOR LOWER TRIM PANEL** (See CAB DOOR LOWER TRIM PANEL, page 250)**, Install Passenger Side Cab Door Lower Trim Panel**.

Install Driver Side Manual Window Regulator Assembly

Refer to Figure 67 (See Figure 67, page 75) for Items in parentheses.

1. Position manual window regulator assembly (Item 3) on back side of inner door panel (Item 4) and install six hex head mach. screws (Item 1) from front side of inner door panel (Item 2).

Refer to Figure 59 (See Figure 59, page 64) for Items in parentheses.

2. Position upper door trim panel (Item 3) in place on front side of inner door panel (Item 6) and align two flat dome pine tree trim push-in fasteners (Item 5) with mounting holes on inner door panel and push both flat dome pine tree trim push-in fasteners through inner door panel.

3. Install cab door grab handle onto upper door trim panel. Refer to **CAB DOOR GRAB HANDLE** (See CAB DOOR GRAB HANDLE, page 258)**, Install Driver Side Cab Door Grab Handle**.

Refer to Figure 66 (See Figure 66, page 74) for Items in parentheses.

4. If vehicle is so equipped, position electric door lock switch assembly (Item 1) onto upper door trim panel (Item 4) and install two pan head mach. screws (Item 2) and tighten.

5. Install inner door handle onto upper door trim/inner door panel and window regulator assembly. Refer to **INNER DOOR HANDLE** (See INNER DOOR HANDLE, page 258)**, Install Driver Side Inner Door Handle**.

Refer to Figure 161 (See Figure 161, page 263) for Items in parentheses.

6. Hold upper door trim/inner door panel and window regulator assembly (Item 1) up to cab door with back side of inner door panel (Item 2) facing cab door, position wiring harness push-in fasteners (Item 3) in place on back side of inner door panel and align push-in fasteners with wiring harness mounting holes of

inner door panel. Push the push-in fasteners through inner door panel. If so equipped, connect electric door lock switch connector (Item 4) to back of electric door lock switch assembly (Item 5) and connect wiring harness connector (Item 6) to electric door lock actuator (Item 7).

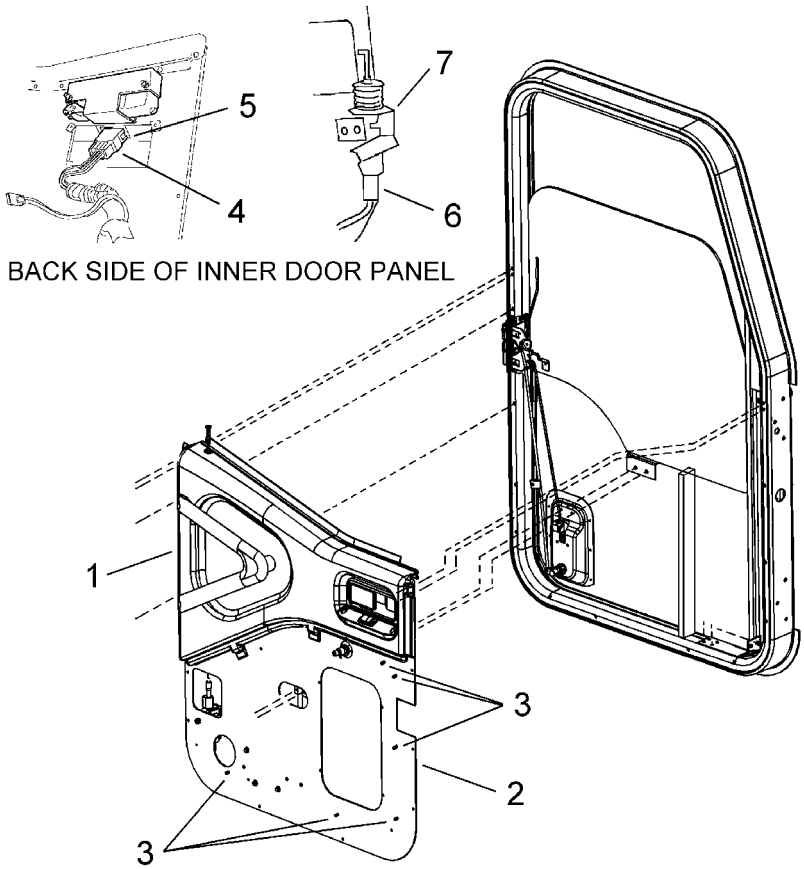

Figure 161 Cab Door Wiring Harness on Inner Door Panel

1. UPPER DOOR TRIM/INNER DOOR PANEL AND WINDOW REGULATOR ASSEMBLY
2. INNER DOOR PANEL
3. WIRING HARNESS PUSH-IN FASTENERS
4. ELECTRIC DOOR LOCK SWITCH CONNECTOR
5. ELECTRIC DOOR LOCK SWITCH ASSEMBLY
6. WIRING HARNESS CONNECTOR
7. ELECTRIC DOOR LOCK ACTUATOR

Refer to Figure 65 (See Figure 65, page 73) for Items in parentheses.

7. While holding upper door trim/inner door panel and window regulator assembly (Item 1) away from cab door, connect cab door courtesy light switch connector (Item 8) to cab door courtesy light switch.

8. Hold upper door trim/inner door panel and window regulator assembly (Item 1) away from cab door and install inner door handle control rod (Item 6) into door latch inner door handle control rod (Item 7) from door latch assembly (Item 4) and slide retaining clip (Item 5) onto inner door handle control rod to secure them together.

Refer to Figure 41 (See Figure 41, page 43) for Items in parentheses.

9. Place upper door trim/inner door panel and window regulator assembly (Item 3) over door lock control rod (Item 2) and slide down into position on cab door.

10. Hold upper door trim/inner door panel and window regulator assembly (Item 3) onto cab door and install six pan head torx screws (Item 11) securing it to cab door.

11. If so equipped, through access opening in inner door panel (Item 6), install electric door lock control rod of electric door lock actuator (Item 9) into electric door lock control rod (Item 10) and slide retaining clip (Item 8) onto lock control rod of electric door lock actuator.

Refer to Figure 63 (See Figure 63, page 71) for Items in parentheses.

12. If necessary, temporarily slide window regulator handle (Item 1) onto window regulator handle shaft (Item 2) and align mounting holes in window regulator assembly (Item 6) with window regulator bracket (Item 7) on window and install two hex head mach. screws (Item 5) securing them together.

13. Using window regulator handle (Item 1) raise cab window glass up enough to remove wood block (Item 3), 12.5 inches long, through opening in inner door panel (Item 4).

Refer to Figure 41 (See Figure 41, page 43) for Items in parentheses.

14. Thread door lock knob (Item 1) onto door lock control rod (Item 2) sticking through opening in upper door trim/inner door panel and window regulator assembly (Item 3).

15. Install cab door lower trim panel onto cab door. Refer to **CAB DOOR LOWER TRIM PANEL** (See CAB DOOR LOWER TRIM PANEL, page 250)**, Install Driver Side Cab Door Lower Trim Panel**.

Install Passenger Side Manual Window Regulator Assembly

Refer to Figure 72 (See Figure 72, page 80) for Items in parentheses.

1. Position manual window regulator assembly (Item 3) on back side of inner door panel (Item 4) and install six hex head mach. screws (Item 1) from front side of inner door panel (Item 2).

Refer to Figure 60 (See Figure 60, page 65) for Items in parentheses.

2. Position upper door trim panel (Item 3) in place on front side of inner door panel (Item 6) and align two flat dome pine tree trim push-in fasteners (Item 5) with mounting holes on inner door panel and push both flat dome pine tree trim push-in fasteners through inner door panel.

3. Install cab door grab handle onto upper door trim panel. Refer to **CAB DOOR GRAB HANDLE** (See CAB DOOR GRAB HANDLE, page 258)**, Install Passenger Side Cab Door Grab Handle**.

Refer to Figure 71 (See Figure 71, page 79) for Items in parentheses.

4. If vehicle is so equipped, position electric door lock switch assembly (Item 1) onto upper door trim panel (Item 4) and install two pan head mach. screws (Item 2) and tighten.

5. Install inner door handle onto upper door trim/inner door panel and window regulator assembly. Refer to **INNER DOOR HANDLE** (See INNER DOOR HANDLE, page 258)**, Install Passenger Side Inner Door Handle**.

Refer to Figure 162 (See Figure 162, page 265) for Items in parentheses.

6. Hold upper door trim/inner door panel and window regulator assembly (Item 1) up to cab door with back side of inner door panel (Item 2) facing cab door, position wiring harness push-in fasteners (Item 3) in place on back side of inner door panel and align push-in fasteners with wiring harness mounting holes of inner door panel. Push the push-in fasteners through inner door panel. If so equipped, connect electric door lock switch connector (Item 4) to back of electric door lock switch assembly (Item 5) and connect wiring harness connector (Item 6) to electric door lock actuator (Item 7).

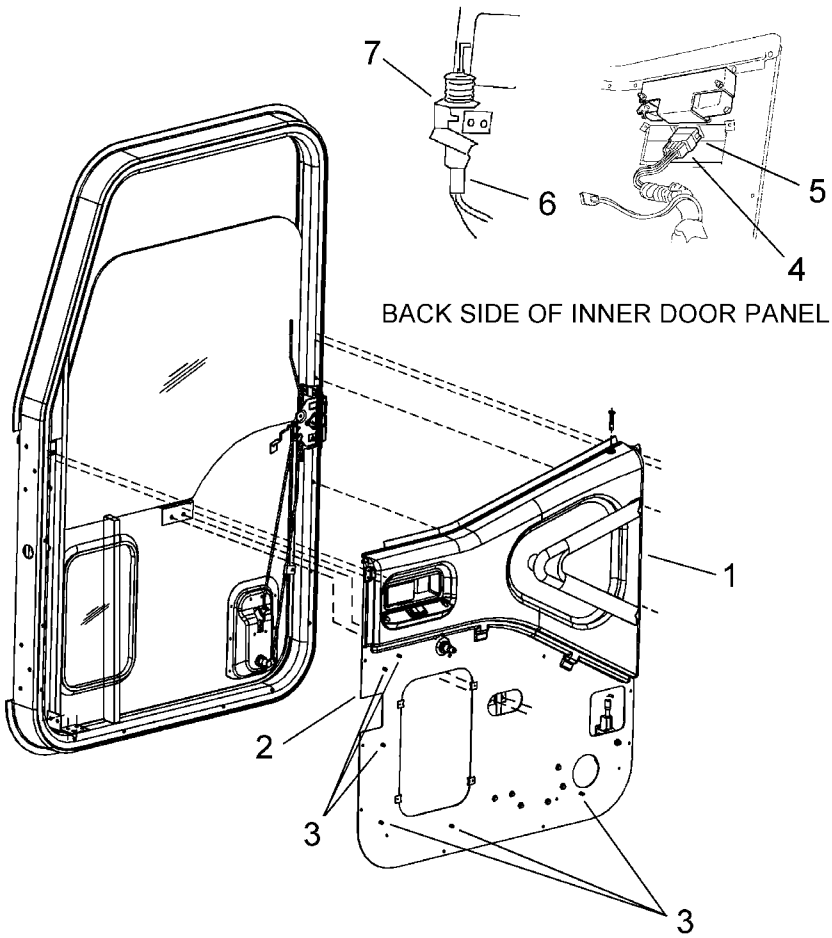

Figure 162 Cab Door Wiring Harness on Inner Door Panel

1. UPPER DOOR TRIM/INNER DOOR PANEL AND WINDOW REGULATOR ASSEMBLY
2. INNER DOOR PANEL
3. WIRING HARNESS PUSH-IN FASTENERS
4. ELECTRIC DOOR LOCK SWITCH CONNECTOR
5. ELECTRIC DOOR LOCK SWITCH ASSEMBLY
6. WIRING HARNESS CONNECTOR
7. ELECTRIC DOOR LOCK ACTUATOR

Refer to Figure 70 (See Figure 70, page 78) for Items in parentheses.

7. While holding upper door trim/inner door panel and window regulator assembly (Item 1) away from cab door, connect cab door courtesy light switch connector (Item 8) to cab door courtesy light switch.

8. Hold upper door trim/inner door panel and window regulator assembly (Item 1) away from cab door and install inner door handle control rod (Item 6) into door latch inner door handle control rod (Item 7) from door latch assembly (Item 4) and slide retaining clip (Item 5) onto inner door handle control rod to secure them together.

Refer to Figure 49 (See Figure 49, page 51) for Items in parentheses.

9. Place upper door trim/inner door panel and window regulator assembly (Item 3) over door lock control rod (Item 2) and slide down into position on cab door.

10. Hold upper door trim/inner door panel and window regulator assembly (Item 3) onto cab door and install six pan head torx screws (Item 11) securing it to cab door.

11. If so equipped, through access opening in inner door panel (Item 6), install electric door lock control rod of electric door lock actuator (Item 9) into electric door lock control rod (Item 10) and slide retaining clip (Item 8) onto lock control rod of electric door lock actuator.

Refer to Figure 68 (See Figure 68, page 76) for Items in parentheses.

12. If necessary, temporarily slide window regulator handle (Item 1) onto window regulator handle shaft (Item 2) and align mounting holes in window regulator assembly (Item 6) with window regulator bracket (Item 7) on window and install two hex head mach. screws (Item 5) securing them together.

13. Using window regulator handle (Item 1) raise cab window glass up enough to remove wood block (Item 3), 12.5 inches long, through opening in inner door panel (Item 4).

Refer to Figure 49 (See Figure 49, page 51) for Items in parentheses.

14. Thread door lock knob (Item 1) onto door lock control rod (Item 2) sticking through opening in upper door trim/inner door panel and window regulator assembly (Item 3).

15. Install cab door lower trim panel onto cab door. Refer to **CAB DOOR LOWER TRIM PANEL** (See CAB DOOR LOWER TRIM PANEL, page 250)**, Install Passenger Side Cab Door Lower Trim Panel**.

5.23. CAB DOOR WINDOW GLASS AND FRONT RUN CHANNEL

Install Driver Side Front Run Channel and Cab Door Window Glass

CAUTION – **To prevent damage to the door while fully open, reinstall the door check strap.**

Refer to Figure 73 (See Figure 73, page 82) for Items in parentheses.

If **WINDOW GLASS FRONT RUN CHANNEL** and **FRONT RUN CHANNEL FILLER CORNER** (Items 6 and 8) were removed from cab door, reinstall by following Steps 1 and 2 below before installing cab door window glass.

1. If window glass front run channel (Item 6) was replaced, position window glass front run channel bracket (Item 2) in place at the bottom of new window glass front run channel and install one pan head mach. screw (Item 10) and tighten.

2. Position window glass front run channel and front run channel filler corner (Items 6 and 8) in place on cab door and install two pan head self-tapping mach. screws (Item 9) through window glass front run channel

and front run channel filler corner securing them to the cab door. Push material back into channel of window glass front run channel at front run channel filler corner. Do not attach bottom of window glass front run channel and mounting bracket (Items 6 and 2) to cab door until cab door window glass is installed.

3. Position cab door window glass (Item 5) into upper portion of window glass rear run channel (Item 7) of cab door (Item 3). Lower cab door window glass to bottom of cab door, then push window glass front run channel (Item 6) forward slightly and slide window glass into window glass front run channel. Raise window glass up far enough to place wood block (Item 4), 12.5 inches long, between window glass and bottom of cab door with bottom of wood block near two mounting screw holes for window glass front run channel bracket (Item 2). This will hold window glass in proper position for installing it to upper door trim/inner door panel and window regulator assembly.

4. Position window glass front run channel bracket (Item 2) in place inside cab door (Item 3) and install two pan head mach. screws (Item 1) into bottom of cab door and tighten.

5. Install upper door trim/inner door panel and window regulator assembly onto cab door. Refer to **UPPER DOOR TRIM/INNER DOOR PANEL AND WINDOW REGULATOR ASSEMBLY** (See UPPER DOOR TRIM/INNER DOOR PANEL AND WINDOW REGULATOR ASSEMBLY, page 252)**, Install Driver Side Upper Door Trim/Inner Door Panel and Window Regulator Assembly**.

6. Install cab door lower trim panel onto cab door. Refer to **CAB DOOR LOWER TRIM PANEL** (See CAB DOOR LOWER TRIM PANEL, page 250)**, Install Driver Side Cab Door Lower Trim Panel**.

Install Passenger Side Front Run Channel and Cab Door Window Glass

CAUTION – To prevent damage to the door while fully open, reinstall the door check strap.

Refer to Figure 74 (See Figure 74, page 84) for Items in parentheses.

If **WINDOW GLASS FRONT RUN CHANNEL** and **FRONT RUN CHANNEL FILLER CORNER** (Items 6 and 8) were removed from cab door, reinstall by following steps 1 and 2 below before installing cab door window glass.

1. If window glass front run channel (Item 6) was replaced, position window glass front run channel bracket (Item 2) in place at the bottom of new window glass front run channel and install one pan head mach. screw (Item 10) and tighten.

2. Position window glass front run channel and front run channel filler corner (Items 6 and 8) in place on cab door and install two pan head self-tapping mach. screws (Item 9) through window glass front run channel and front run channel filler corner securing them to the cab door. Push material back into channel of window glass front run channel at front run channel filler corner. Do not attach bottom of window glass front run channel and mounting bracket (Items 6 and 2) to cab door until cab door window glass is installed.

3. Position cab door window glass (Item 5) into upper portion of window glass rear run channel (Item 7) of cab door (Item 3). Lower cab door window glass to bottom of cab door, then push window glass front run channel (Item 6) forward slightly and slide window glass into window glass front run channel. Raise window glass up far enough to place wood block (Item 4), 12.5 inches long, between window glass and bottom of cab door with bottom of wood block near two mounting screw holes for window glass front run channel bracket (Item 2). This will hold window glass in proper position for installing it to upper door trim/inner door panel and window regulator assembly.

4. Position window glass front run channel bracket (Item 2) in place inside cab door (Item 3) and install two pan head mach. screws (Item 1) into bottom of cab door and tighten.

5. Install upper door trim/inner door panel and window regulator assembly onto cab door. Refer to **UPPER DOOR TRIM/INNER DOOR PANEL AND WINDOW REGULATOR ASSEMBLY** (See UPPER DOOR TRIM/INNER DOOR PANEL AND WINDOW REGULATOR ASSEMBLY, page 252)**, Install Passenger Side Upper Door Trim/Inner Door Panel and Window Regulator Assembly**.

6. Install cab door lower trim panel onto cab door. Refer to **CAB DOOR LOWER TRIM PANEL** (See CAB DOOR LOWER TRIM PANEL, page 250)**, Install Passenger Side Cab Door Lower Trim Panel**.

5.24. INSTALL CAB DOOR LATCH ASSEMBLY

Refer to Figure 76 (See Figure 76, page 87) for Items in parentheses.

1. Position inside and outside cab door latch assemblies (Item 2) in place on the side of the cab door. Install four mounting screws (Item 1) and tighten, driver side shown.

Refer to Figure 75 (See Figure 75, page 86) for Items in parentheses.

CAUTION – **To prevent damage to the door while fully open, reinstall the door check strap.**

2. Install door key lock control rod (Item 9) onto cab door latch assembly (Item 3). Slide retaining clip (Item 8) onto door key lock control rod to secure it, driver side shown.

3. Install outer cab door handle control rod (Item 7) onto cab door latch assembly (Item 3). Slide retaining clip (Item 6) onto outer cab door handle control rod to secure it, driver side shown.

4. Install door lock button control rod (Item 5) onto cab door latch assembly (Item 3). Slide retaining clip (Item 4) onto door lock button control rod to secure it, driver side shown.

5. Install inner cab door handle control rod (Item 2) onto cab door latch assembly (Item 3). Slide retaining clip (Item 1) onto outer cab door handle control rod to secure it, driver side shown.

If installing **DRIVER SIDE CAB DOOR LATCH ASSEMBLY** follow Steps 6 and 7 below.

6. Install upper door trim/inner door panel and window regulator assembly onto cab door. Refer to **UPPER DOOR TRIM/INNER DOOR PANEL AND WINDOW REGULATOR ASSEMBLY** (See UPPER DOOR TRIM/INNER DOOR PANEL AND WINDOW REGULATOR ASSEMBLY, page 252)**, Install Driver Side Upper Door Trim/Inner Door Panel and Window Regulator Assembly**.

7. Install cab door lower trim panel onto cab door. Refer to **CAB DOOR LOWER TRIM PANEL** (See CAB DOOR LOWER TRIM PANEL, page 250)**, Install Driver Side Cab Door Lower Trim Panel**.

If installing **PASSENGER SIDE CAB DOOR LATCH ASSEMBLY** follow Steps 8 and 9 below.

8. Install upper door trim/inner door panel and window regulator assembly onto cab door. Refer to **UPPER DOOR TRIM/INNER DOOR PANEL AND WINDOW REGULATOR ASSEMBLY** (See UPPER DOOR TRIM/INNER DOOR PANEL AND WINDOW REGULATOR ASSEMBLY, page 252)**, Install Passenger Side Upper Door Trim/Inner Door Panel and Window Regulator Assembly**.

9. Install cab door lower trim panel onto cab door. Refer to **CAB DOOR LOWER TRIM PANEL** (See CAB DOOR LOWER TRIM PANEL, page 250)**, Install Passenger Side Cab Door Lower Trim Panel**.

5.25. INSTALL CAB DOOR STRIKER PIN

Refer to Figure 77 (See Figure 77, page 88) for Items in parentheses unless otherwise noted.

Cab door striker pin (Item 1) mounted on cab lock pillar (Item 2) provides for positive engagement with cab door latch assembly (Item 2, Figure 76) (See Figure 76, page 87). Door striker pin installation requires a torx head tool (Item 3). Enlarged mounting hole in cab lock pillar permits adjustment.

1. If spacer shims (Item 4) were used between cab lock pillar (Item 2) and cab door striker pin (Item 1), reuse during installation of cab door striker pin, driver side shown.

2. Position cab door striker pin (Item 1) onto cab lock pillar (Item 2) and thread cab door striker pin into cab lock pillar. Use a torx head tool (Item 3) and tighten to 34 to 50 Lbf-ft (46 to 68 N•m), driver side shown.

3. If cab door striker pin (Item 1) needs adjustment on cab lock pillar (Item 2) to provide proper latching of cab door, refer to **ADJUSTMENTS, CAB DOOR STRIKER PIN AT LOCK PILLAR** (See CAB DOOR STRIKER PIN AT LOCK PILLAR, page 343) .

5.26. INSTALL DOOR LOCK ASSEMBLY

Door locks and console-mounted key switch are coded the same so that one key will operate all three cylinders. The code number is stamped on the key switch body just in back of the cap nut. The code number does not appear on door the lock assembly.

To REPLACE the door lock, you must replace the complete assembly. The tumbler unit is not removable. If you must replace one door lock, replace both of them with matching locks.

Refer to Figure 78 (See Figure 78, page 89) for Items in parentheses.

CAUTION – To prevent damage to the door while fully open, reinstall the door check strap.

1. Position door lock cylinder assembly (Item 3) into cab door (Item 5) and rotate door cylinder lock assembly to position key slot properly into cab door, driver side shown.

2. Install lock cylinder retainer clip (Item 4) into door lock cylinder assembly (Item 3), driver side shown.

3. Install lock control rod (Item 2) into door lock cylinder assembly (Item 3) and slide retaining clip (Item 1) onto lock control rod, driver side shown.

If installing **DRIVER SIDE DOOR LOCK ASSEMBLY** follow Steps 4 and 5 below.

4. Install upper door trim/inner door panel and window regulator assembly onto cab door. Refer to **UPPER DOOR TRIM/INNER DOOR PANEL AND WINDOW REGULATOR ASSEMBLY** (See UPPER DOOR TRIM/INNER DOOR PANEL AND WINDOW REGULATOR ASSEMBLY, page 252)**, Install Driver Side Upper Door Trim/Inner Door Panel and Window Regulator Assembly**.

5. Install cab door lower trim panel onto cab door. Refer to **CAB DOOR LOWER TRIM PANEL** (See CAB DOOR LOWER TRIM PANEL, page 250)**, Install Driver Side Cab Door Lower Trim Panel**.

If installing **PASSENGER SIDE DOOR LOCK ASSEMBLY** follow Steps 6 and 7 below.

6. Install upper door trim/inner door panel and window regulator assembly onto cab door. Refer to **UPPER DOOR TRIM/INNER DOOR PANEL AND WINDOW REGULATOR ASSEMBLY** (See UPPER DOOR TRIM/INNER DOOR PANEL AND WINDOW REGULATOR ASSEMBLY, page 252)**, Install Passenger Side Upper Door Trim/Inner Door Panel and Window Regulator Assembly**.

7. Install cab door lower trim panel onto cab door. Refer to **CAB DOOR LOWER TRIM PANEL** (See CAB DOOR LOWER TRIM PANEL, page 250)**, Install Passenger Side Cab Door Lower Trim Panel**.

5.27. INSTALL OUTER DOOR HANDLE

The outer door handle assembly (Item 1, Figure 79) (See Figure 79, page 90) is a combination handle and lever. It is connected by control rods to the latch assembly mechanism, and actuates the latch jaws.

CAUTION – **To prevent damage to the door while fully open, reinstall the door check strap.**

Refer to Figure 78 (See Figure 78, page 89) for Items in parentheses.

1. Position outer door handle assembly (Item 7) on outer cab door (Item 5) and install four hex nuts and washers (Item 6) and tighten to secure outer door handle assembly onto cab door, driver side shown.

Refer to Figure 79 (See Figure 79, page 90) for Items in parentheses.

2. Attach outer door handle control rod (Item 3) onto outer door handle assembly (Item 1) and slide retaining clip (Item 2) over outer door handle control rod, driver side shown.

Refer to Figure 78 (See Figure 78, page 89) for Items in parentheses.

3. Attach lock control rod (Item 2) onto door lock cylinder assembly (Item 3) and slide retaining clip (Item 1) onto lock control rod, driver side shown.

If installing **DRIVER SIDE OUTER DOOR HANDLE ASSEMBLY** follow Steps 4 and 5 below.

4. Install upper door trim/inner door panel and window regulator assembly onto cab door. Refer to **UPPER DOOR TRIM/INNER DOOR PANEL AND WINDOW REGULATOR ASSEMBLY** (See UPPER DOOR TRIM/INNER DOOR PANEL AND WINDOW REGULATOR ASSEMBLY, page 252)**, Install Driver Side Upper Door Trim/Inner Door Panel and Window Regulator Assembly**.

5. Install cab door lower trim panel onto cab door. Refer to **CAB DOOR LOWER TRIM PANEL** (See CAB DOOR LOWER TRIM PANEL, page 250)**, Install Driver Side Cab Door Lower Trim Panel**.

If installing **PASSENGER SIDE OUTER DOOR HANDLE ASSEMBLY** follow Steps 6 and 7 below.

6. Install upper door trim/inner door panel and window regulator assembly onto cab door. Refer to **UPPER DOOR TRIM/INNER DOOR PANEL AND WINDOW REGULATOR ASSEMBLY** (See UPPER DOOR TRIM/INNER DOOR PANEL AND WINDOW REGULATOR ASSEMBLY, page 252)**, Install Passenger Side Upper Door Trim/Inner Door Panel and Window Regulator Assembly**.

7. Install cab door lower trim panel onto cab door. Refer to **CAB DOOR LOWER TRIM PANEL** (See CAB DOOR LOWER TRIM PANEL, page 250)**, Install Passenger Side Cab Door Lower Trim Panel**.

5.28. INSTALL CAB DOOR OPENING SEALS

1. Install new weather seal by positioning locating pins into holes, then press seal in place around cab door opening. Trim excess so that seam is positioned at cab door check strap (Item 2, Figure 40) (See Figure 40, page 42).

5.29. ELECTRIC WINDSHIELD WIPER SWITCHES

The electric wiper/washer switches for the 5000*i* and 9000*i* series models are located on the wing panel (Item 3, Figure 80) (See Figure 80, page 92) of the instrument panel to the right of the driver.

Install Wiper/Washer Control Switches and Indicator Lights

To install the electrical switches (Items 1 and 2, Figure 80) (See Figure 80, page 92) on the wing panel (Item 3, Figure 80) (See Figure 80, page 92), refer to **GROUP 08 – ELECTRICAL** in the **Master Service Manual**.

5.30. INSTALL WINDSHIELD WIPER ARM AND BLADE ASSEMBLY

Refer to Figure 81 (See Figure 81, page 93) for Items in parentheses.

1. Position windshield wiper arm and blade assembly (Item 3) at spline with wiper blade horizontal to bottom edge of windshield. Lift windshield wiper arm slide lever (Item 4) and push windshield wiper arm and blade assembly down onto spline, windshield wiper arm slide lever will lock windshield wiper arm and blade assembly into place once it is pushed all the way down.

2. Install windshield washer hose (Item 1 or 2) onto driver and/or passenger side windshield wiper arm and blade assembly (Item 3) as required. If adjustment is required, refer to **ADJUSTMENTS, WINDSHIELD WIPER ARM AND BLADE ASSEMBLY** (See WINDSHIELD WIPER ARM AND BLADE ASSEMBLY, page 343).

3. Turn wipers on to high speed and check for proper operation.

4. Close fiberglass tilt hood and latch hood on both sides. On 5000*i* models with a butterfly hood close both right and left side hoods and latch both latches.

5.31. COWL TRAY

Refer to Figure 84 (See Figure 84, page 97) for Items in parentheses.

1. If cowl tray (Item 1) was removed with cowl tray drain tube (Item 2) attached and cowl tray drain tube was positioned behind air cleaner (Item 3) mounting bracket, as was noted when removing cowl tray with cowl tray drain tube attached. Refer to Figure 84 (See Figure 84, page 97) for proper routing of cowl tray drain tube. If cowl tray drain tube was removed from cowl tray, install cowl tray drain tube onto bottom of cowl tray, then squeeze drain tube clamp (Item 4) and slide it back into place.

Refer to Figure 83 (See Figure 83, page 96) for Items in parentheses.

2. With cowl tray (Item 1) positioned at engine side of dash panel, on passenger side install windshield washer hose (Item 3) with grommet (Item 2) from windshield washer bottle through hole in cowl tray. Pull windshield washer hose through cowl tray until grommet is at the hole and install grommet into cowl tray.

Refer to Figure 82 (See Figure 82, page 95) for Items in parentheses.

3. On standard 5000*i* and 9000*i* models, install cowl tray (Item 4) as follows:

a. Position air intake screen (Item 8) and cowl tray (Item 4) in place at air duct inlet (Item 9). Align mounting holes in air intake screen and cowl tray with air duct inlet threaded holes. Install four hex flanged bolts (Item 7) through air intake screen, cowl tray and into air duct inlet threaded holes. Do not tighten until cowl tray is secured to engine side of dash panel.

b. Position cowl tray (Item 4) against engine side of dash panel and install four hex flanged bolts (Item 6) and tighten.

c. Tighten four hex flanged bolts (Item 7) into air duct inlet threaded holes securing air intake screen (Item 8) and cowl tray (Item 4) to air duct inlet (Item 9).

d. Install windshield washer hose (Item 2) from windshield washer bottle onto tee fitting (Item 5) of windshield washer hose assembly.

e. Install windshield washer hoses (Items 1 and 2) into three retaining clips (Item 3) on the cowl tray (Item 4).

f. Install windshield wiper arm and blade assemblies. Refer to **WINDSHIELD WIPER ARM AND BLADE ASSEMBLY** (See Install WINDSHIELD WIPER ARM AND BLADE ASSEMBLY, page 271)**, Install Windshield Wiper Arm and Blade Assembly**.

Refer to Figure 82 (See Figure 82, page 95) for Items in parentheses.

4. On 5000*i* and 9000*i* models with external air cleaners, install cowl tray (Item 10) as follows:

a. Position cowl tray (Item 10) against engine side of dash panel and install four hex flanged bolts (Item 6) and tighten.

b. Install windshield washer hose (Item 2) from windshield washer bottle onto tee fitting (Item 5) of windshield washer hose assembly.

c. Install windshield washer hoses (Items 1 and 2) into three retaining clips (Item 3) on the cowl tray (Item 10).

d. Install windshield wiper arm and blade assemblies. Refer to **WINDSHIELD WIPER ARM AND BLADE ASSEMBLY** (See Install WINDSHIELD WIPER ARM AND BLADE ASSEMBLY, page 271)**, Install Windshield Wiper Arm and Blade Assembly**.

Refer to Figure 82 (See Figure 82, page 95) for Items in parentheses.

5. On 5000*i* models with a butterfly hood, install cowl tray (Item 11) as follows:

a. Position cowl tray (Item 11) at engine side of dash panel and align three holes in the back of the cowl tray with three threaded studs (Item 14) on engine side of dash panel. Push cowl tray over threaded studs and against engine side of dash panel.

b. Position rear hood hinge retainer bracket (Item 13) over the three threaded studs (Item 14) and install three hex lock nuts and flat washers (Item 12) securing rear hood hinge retainer bracket to cowl tray (Item 11).

c. Position air intake screen (Item 8) and cowl tray (Item 11) in place at air duct inlet (Item 9). Align mounting holes in air intake screen and cowl tray with air duct inlet threaded holes. Install four hex flanged bolts (Item 7) through air intake screen, cowl tray and into air duct inlet threaded holes. Do not tighten until cowl tray is secured to engine side of dash panel.

d. Position cowl tray (Item 11) against engine side of dash panel and install four hex flanged bolts (Item 6) and tighten.

e. Tighten four hex flanged bolts (Item 7) into air duct inlet threaded holes securing air intake screen (Item 8) and cowl tray (Item 11) to air duct inlet (Item 9).

f. Install windshield washer hose (Item 2) from windshield washer bottle onto tee fitting (Item 5) of windshield washer hose assembly.

g. Install windshield washer hoses (Items 1 and 2) into three retaining clips (Item 3) on the cowl tray (Item 11).

h. Install windshield wiper arm and blade assemblies. Refer to **WINDSHIELD WIPER ARM AND BLADE ASSEMBLY** (See Install WINDSHIELD WIPER ARM AND BLADE ASSEMBLY, page 271)**, Install Windshield Wiper Arm and Blade Assembly**.

i. Install butterfly hood after installing the cowl tray and windshield wiper arm and blade assemblies. Refer to **GROUP 09 – HOOD, GRILLE, AND FENDERS** in the **Master Service Manual**.

5.32. AIR DUCT INLET

NOTE – If the vehicle being serviced has external air cleaners the following procedure will not be required.

Refer to Figure 163 (See Figure 163, page 274) for Items in parentheses.

1. Rotate air duct inlet (Item 1) down into place against air duct inlet mounting bracket (Item 3) making sure air duct inlet mounting studs (Item 2) are in mounting bracket holes.

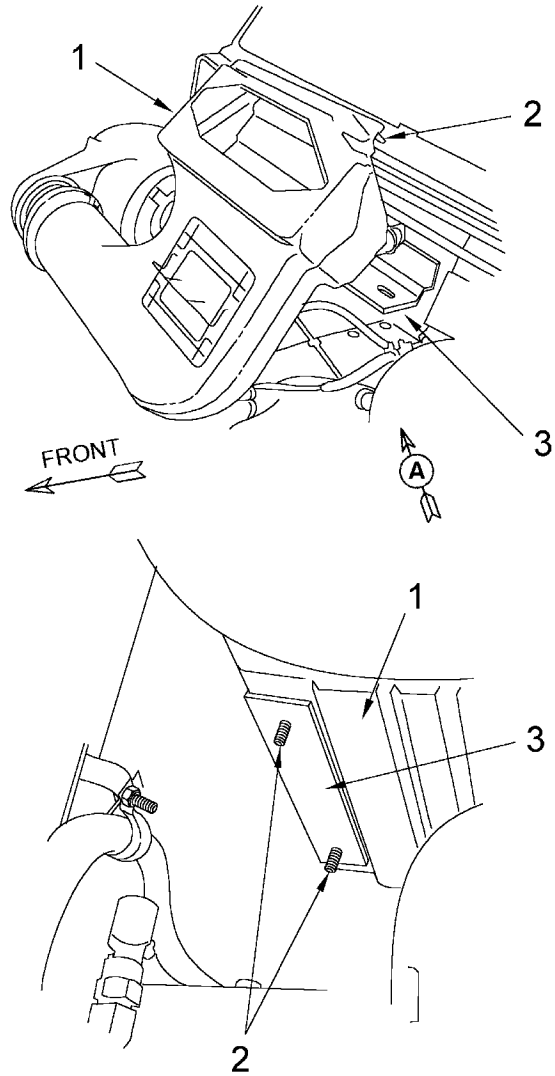

Figure 163 Air Duct Inlet

1. AIR DUCT INLET
2. AIR DUCT INLET MOUNTING STUDS, 5/16–18 UNC
3. AIR DUCT INLET MOUNTING BRACKET

Refer to Figure 85 (See Figure 85, page 98) for Items in parentheses.

2. Reach under air duct inlet (Item 1) and install two hex lock nuts and washers (Item 2) onto air duct inlet mounting studs (Item 3) securing air duct inlet to air duct inlet mounting bracket (Item 4) and tighten.

3. Install cowl tray. Refer to **COWL TRAY** (See COWL TRAY, page 271)**, Install Cowl Tray**.

4. Install windshield wiper arm and blade assemblies. Refer to **WINDSHIELD WIPER ARM AND BLADE ASSEMBLY** (See Install WINDSHIELD WIPER ARM AND BLADE ASSEMBLY, page 271)**, Install Windshield Wiper Arm and Blade Assembly**.

5.33. WINDSHIELD WIPER MOTOR, BRACKET AND LINKAGE ASSEMBLY

Install Windshield Wiper Motor, Bracket and Linkage Assembly on Vehicles before 2002 Engines before May 2001

Refer to Figure 87 (See Figure 87, page 101) for Items in parentheses.

NOTE – Figure 87 shows the Windshield Wiper Motor, Bracket and Linkage Assembly used on vehicles with one piece windshields and the Windshield Wiper Motor, Bracket and Linkage Assembly used on vehicles with two piece windshields.

1. Position both ends of windshield wiper motor, bracket and linkage assembly (Item 2) over threaded mounting studs (Item 8) on engine side of cowl and install flat washers and hex lock nuts (Item 1); do not tighten.

2. Position windshield wiper motor, bracket and linkage assembly (Item 2) over mounting holes on surge tank mounting bracket (Item 7) and install two hex head mach. screw sems assemblies (Item 6) and tighten.

3. Tighten hex lock nuts (Item 1) at both ends of windshield wiper motor, bracket and linkage assembly (Item 2). Tighten to 155 to 190 Lbf-in (17.5 to 21.5 N•m).

4. Reach under surge tank (Item 3) and connect windshield wiper motor electrical connector (Item 4) to the wiring harness electrical connector (Item 5).

5. Install air duct inlet. Refer to **AIR DUCT INLET** (See AIR DUCT INLET, page 273), **Install Air Duct Inlet**.

6. Install cowl tray. Refer to **COWL TRAY** (See COWL TRAY, page 271), **Install Cowl Tray**.

7. Install windshield wiper arm and blade assemblies. Refer to **WINDSHIELD WIPER ARM AND BLADE ASSEMBLY** (See Install WINDSHIELD WIPER ARM AND BLADE ASSEMBLY, page 271), **Install Windshield Wiper Arm and Blade Assembly**.

Install Windshield Wiper Motor, Bracket and Linkage Assembly on Vehicles with 2002 Engines after May 2001

Refer to Figure 88 (See Figure 88, page 103) for Items in parentheses.

NOTE – Figure 88 shows the Windshield Wiper Motor, Bracket and Linkage Assembly used on vehicles with one piece windshields and the Windshield Wiper Motor, Bracket and Linkage Assembly used on vehicles with two piece windshields.

1. Position both ends of windshield wiper motor, bracket and linkage assembly (Item 2) over threaded mounting studs (Item 7) on engine side of cowl and install flat washers and hex lock nuts (Item 1); do not tighten.

2. Position windshield wiper motor, bracket and linkage assembly (Item 2) over mounting holes on windshield wiper mounting bracket (Item 3) and install two hex head mach. screw sems assemblies (Item 6) and tighten.

3. Tighten hex lock nuts (Item 1) at both ends of windshield wiper motor, bracket and linkage assembly (Item 2). Tighten to 155 to 190 Lbf-in (17.5 to 21.5 N•m)

4. Reach under windshield wiper mounting bracket (Item 3) and connect windshield wiper motor electrical connector (Item 4) to the wiring harness electrical connector (Item 5).

5. Install air duct inlet. Refer to **AIR DUCT INLET** (See AIR DUCT INLET, page 273), **Install Air Duct Inlet**.

6. Install cowl tray. Refer to **COWL TRAY** (See COWL TRAY, page 271), **Install Cowl Tray**.

7. Install windshield wiper arm and blade assemblies. Refer to **WINDSHIELD WIPER ARM AND BLADE ASSEMBLY** (See Install WINDSHIELD WIPER ARM AND BLADE ASSEMBLY, page 271), **Install Windshield Wiper Arm and Blade Assembly**.

Install Windshield Wiper Motor, Bracket and Linkage Assembly on Vehicles with 2002 Engines after January 2005

Refer to Figure 89 (See Figure 89, page 105) for Items in parentheses.

NOTE – Figure 89 shows the Windshield Wiper Motor, Bracket and Linkage Assembly used on vehicles with one piece windshields and the Windshield Wiper Motor, Bracket and Linkage Assembly used on vehicles with two piece windshields.

1. Position both ends of windshield wiper motor, bracket and linkage assembly (Item 2) over threaded mounting studs (Item 6) on engine side of cowl and install flat washers and hex lock nuts (Item 1); do not tighten.

2. Position windshield wiper motor, bracket and linkage assembly (Item 2) over mounting hole on engine side of cowl and install hex head mach. screw sems assembly (Item 3) and tighten.

3. Tighten hex lock nuts (Item 1) at both ends of windshield wiper motor, bracket and linkage assembly (Item 2). Tighten to 155 to 190 Lbf-in (17.5 to 21.5 N•m).

4. Connect wiring harness electrical connector (Item 4) to windshield wiper motor electrical connector (Item 5).

5. Install air duct inlet. Refer to **AIR DUCT INLET** (See AIR DUCT INLET, page 273), **Install Air Duct Inlet**.

6. Install cowl tray. Refer to **COWL TRAY** (See COWL TRAY, page 271), **Install Cowl Tray**.

7. Install windshield wiper arm and blade assemblies. Refer to **WINDSHIELD WIPER ARM AND BLADE ASSEMBLY** (See Install WINDSHIELD WIPER ARM AND BLADE ASSEMBLY, page 271), **Install Windshield Wiper Arm and Blade Assembly**.

5.34. WIPER MOTOR

NOTE – The parts that make up the electric wiper motor are not serviceable. The entire wiper motor must be replaced as a unit.

The wiper motor is part of the windshield wiper motor, bracket and linkage assembly (Item 2, Figure 87) (See Figure 87, page 101) or (Item 2, Figure 88) (See Figure 88, page 103) or (Item 2, Figure 89) (See Figure 89, page 105) mounted on the engine side of the cowl under the cowl tray and engine air duct inlet assembly.

Install Wiper Motor on Vehicles before 2002 Engines and after 2002 Engines before January 2005

Refer to Figure 90 (See Figure 90, page 107) for Items in parentheses.

NOTE – Before installing the windshield wiper motor (Item 8) onto the windshield wiper motor, bracket and linkage assembly (Item 1) make sure it is in the “PARKED” or “OFF” position.

1. With windshield wiper motor, bracket and linkage assembly (Item 1) on a clean, dry work surface, position windshield wiper motor (Item 8) onto windshield wiper motor, bracket and linkage assembly and install three hex bolts (Item 7) through windshield wiper motor mounting plate of windshield wiper motor, bracket and linkage assembly (Item 1) into windshield wiper motor (Item 8). Tighten hex bolts to 92 to 110 Lbf-in (10.4 to 12.4 N•m).

NOTE – The third hex bolt (Item 7) is not visible in Figure 90, it is accessible before the wiper motor pivot arm (Item 4) is installed.

2. Install one flat washer (Item 5) and wiper linkage (Item 3) onto pivot post of wiper motor pivot arm (Item 4), then install second flat washer (Item 5) and E-Clip retainer (Item 2) securing wiper linkage to wiper motor pivot arm.

3. Position wiper motor pivot arm (Item 4) over motor shaft, before pressing wiper motor pivot arm onto motor shaft, align the wiper linkage (Item 3) and the wiper motor pivot arm so that they are straight in line with each other and press the wiper motor pivot arm onto the spline of motor shaft.

4. Install hex lock nut (Item 6) securing wiper motor pivot arm to motor shaft. Tighten hex lock nut to 180 to 220 Lbf-in (20.3 to 24.9 N•m).

5. Install windshield wiper motor, bracket and linkage assembly. Refer to **WINDSHIELD WIPER MOTOR, BRACKET AND LINKAGE ASSEMBLY** (See WINDSHIELD WIPER MOTOR, BRACKET AND LINKAGE ASSEMBLY, page 275)**, Install Windshield Wiper Motor, Bracket and Linkage Assembly**.

6. Install air duct inlet. Refer to **AIR DUCT INLET** (See AIR DUCT INLET, page 273)**, Install Air Duct Inlet**.

7. Install cowl tray. Refer to **COWL TRAY** (See COWL TRAY, page 271)**, Install Cowl Tray**.

8. Install windshield wiper arm and blade assemblies. Refer to **WINDSHIELD WIPER ARM AND BLADE ASSEMBLY** (See Install WINDSHIELD WIPER ARM AND BLADE ASSEMBLY, page 271)**, Install Windshield Wiper Arm and Blade Assembly**.

Install Wiper Motor with Electrical Connector part of Pig-Tail Wiring Harness on Vehicles with 2002 Engines after January 2005

Refer to Figure 91 (See Figure 91, page 109) for Items in parentheses.

NOTE – Before installing the windshield wiper motor (Item 7) onto the windshield wiper motor mounting bracket (Item 8) make sure it is in the “PARKED” or “OFF” position.

1. Place windshield wiper motor, bracket and linkage assembly (Item 1) on a clean, dry work surface.

2. If the windshield wiper motor mounting bracket (Item 8) is being replaced, install it back onto windshield wiper motor, bracket and linkage assembly mounting bracket (Item 9) of windshield wiper motor, bracket and linkage assembly (Item 1) and install two hex flanged head bolts (Item 6) through windshield wiper motor, bracket and linkage assembly mounting bracket (Item 9) into windshield wiper motor mounting bracket (Item 8) weld nuts. Tighten hex flanged head bolts to 92 to 110 Lbf-in (10.4 to 12.4 N•m).

3. Position windshield wiper motor (Item 7) onto windshield wiper motor mounting bracket (Item 8) and install top two hex flanged head bolts (Item 5) through windshield wiper motor, bracket and linkage assembly mounting bracket (Item 9) and windshield wiper motor mounting bracket (Item 8) into windshield wiper motor. Then install one hex flanged head bolt (Item 5) through windshield wiper motor mounting bracket (Item 8) into windshield wiper motor. Tighten hex flanged head bolts to 92 to 110 Lbf-in (10.4 to 12.4 N•m).

4. Position wiper motor pivot arm (Item 3) with wiper linkage (Item 4) over motor shaft, before pressing wiper motor pivot arm onto motor shaft, align the wiper linkage and the wiper motor pivot arm so that they are straight in line with each other and press the wiper motor pivot arm onto the spline of motor shaft.

5. Install hex flanged lock nut (Item 2) securing wiper motor pivot arm (Item 3) to motor shaft. Tighten hex flanged lock nut to 180 to 220 Lbf-in (20.3 to 24.9 N•m).

6. Install windshield wiper motor, bracket and linkage assembly. Refer to **WINDSHIELD WIPER MOTOR, BRACKET AND LINKAGE ASSEMBLY** (See WINDSHIELD WIPER MOTOR, BRACKET AND LINKAGE ASSEMBLY, page 275)**, Install Windshield Wiper Motor, Bracket and Linkage Assembly**.

7. Install air duct inlet. Refer to **AIR DUCT INLET** (See AIR DUCT INLET, page 273)**, Install Air Duct Inlet**.

8. Install cowl tray. Refer to **COWL TRAY** (See COWL TRAY, page 271)**, Install Cowl Tray**.

9. Install windshield wiper arm and blade assemblies. Refer to **WINDSHIELD WIPER ARM AND BLADE ASSEMBLY** (See Install WINDSHIELD WIPER ARM AND BLADE ASSEMBLY, page 271)**, Install Windshield Wiper Arm and Blade Assembly**.

Install Wiper Motor with Electrical Connector as part of Wiper Motor on Vehicles with 2002 Engines after January 2005

Refer to Figure 92 (See Figure 92, page 111) for Items in parentheses.

NOTE – Before installing the windshield wiper motor (Item 5) onto the windshield wiper motor, bracket and linkage assembly mounting bracket (Item 6) make sure it is in the “PARKED” or “OFF” position.

1. Place windshield wiper motor, bracket and linkage assembly (Item 1) on a clean, dry work surface.

2. Position windshield wiper motor (Item 5) onto windshield wiper motor, bracket and linkage assembly mounting bracket (Item 6) and install four hex flanged head bolts (Item 4) through windshield wiper motor, bracket and linkage assembly mounting bracket (Item 6) into windshield wiper motor (Item 5). Tighten hex flanged head bolts to 92 to 110 Lbf-in (10.4 to 12.4 N•m).

NOTE – Before installing socket of wiper linkage (Item 3) onto pivot ball of wiper motor pivot arm (Item 2), it is recommended that a new weather seal be placed into the socket of wiper linkage.

3. Position socket of wiper linkage (Item 3) with new weather seal over pivot ball of wiper motor pivot arm (Item 2) and press the socket of wiper linkage onto pivot ball of wiper motor pivot arm until it snaps into place.

4. Install windshield wiper motor, bracket and linkage assembly. Refer to **WINDSHIELD WIPER MOTOR, BRACKET AND LINKAGE ASSEMBLY** (See WINDSHIELD WIPER MOTOR, BRACKET AND LINKAGE ASSEMBLY, page 275)**, Install Windshield Wiper Motor, Bracket and Linkage Assembly**.

5. Install air duct inlet. Refer to **AIR DUCT INLET** (See AIR DUCT INLET, page 273)**, Install Air Duct Inlet**.

6. Install cowl tray. Refer to **COWL TRAY** (See COWL TRAY, page 271)**, Install Cowl Tray**.

7. Install windshield wiper arm and blade assemblies. Refer to **WINDSHIELD WIPER ARM AND BLADE ASSEMBLY** (See Install WINDSHIELD WIPER ARM AND BLADE ASSEMBLY, page 271)**, Install Windshield Wiper Arm and Blade Assembly**.

5.35. INSTALL WASHER RESERVOIR/PUMP MOTOR ASSEMBLY

Refer to Figure 93 (See Figure 93, page 112) for Items in parentheses.

1. Position washer reservoir assembly (Item 6) on the vehicle and install three hex flanged mounting bolts (Item 4) and one hex flanged mounting bolt (Item 5) and tighten.

2. Connect washer hose (Item 1) and electrical connector (Item 2) onto washer pump motor (Item 3).

3. Connect battery ground strap.

4. If necessary fill reservoir with windshield washer solvent and check washer operation.

5.36. INSTALL WASHER RESERVOIR PUMP MOTOR — ELECTRIC

Refer to Figure 93 (See Figure 93, page 112) for Items in parentheses.

1. Insert washer pump motor (Item 3) gently down into washer reservoir assembly (Item 6) and push it back toward washer reservoir until properly positioned into washer reservoir.

2. Connect washer hose (Item 1) and electrical connector (Item 2) onto washer pump motor (Item 3).

3. Connect the battery ground strap.

4. If necessary fill reservoir with windshield washer solvent and check washer operation.

5.37. CAB

Install SBA and SFA Cab for 5000*i* Series with Rear Hard Mount before November 1999

Refer to Figure 94 (See Figure 94, page 115) for Items in parentheses.

1. To install SBA and SFA cab for 5000*i* series with rear hard mount before November 1999, use the following procedure.
   a. If removed, install chassis front cab mounting bracket (Item 4) to frame rail (Item 18), both sides and install hex flanged head bolts and hex flanged lock nuts (Item 20). Tighten to 70 to 85 Lbf-ft (95 to 115 N•m).
   b. If removed, install upper rear cab mounting bracket (Item 11) to back of cab and install hex bolts, lock washers and flat washers (Item 19). Tighten to 30 to 38 Lbf-ft (41 to 51 N•m).

NOTE – Use an overhead crane and cab lifting fixture when installing cab on chassis. Pad lifting fixture to prevent damage to cab assembly.

2. Carefully lift cab into position over chassis.

3. Carefully lower cab down to chassis. Just before front cab mounting bracket (Item 3, View Circle A) is placed in the chassis front cab mounting bracket (Item 4, View Circle A), position spacer (Item 14) and mounting bracket bushings (Item 13) in place in chassis front cab mounting bracket.

4. Lower cab so front cab mounting bracket (Item 3, View Circle A) bolt hole lines up with chassis front cab mounting bracket (Item 4, View Circle A) bolt hole. This will hold spacer and mounting bracket bushings (Items 14 and 13) in place, then install mounting hardware as follows.

a. From outboard side, install hex flanged head bolt (Item 1, View Circle A) through front cab mounting bracket (Item 3, View Circle A) and chassis front cab mounting bracket (Item 4, View Circle A) with spacer and mounting bracket bushings (Items 14 and 13), both sides.

b. From inboard side, install hex flanged lock nut (Item 2, View Circle A) on hex flanged head bolt (Item 1, View Circle A), both sides; do not tighten.

5. Position rear of cab so upper rear cab mounting bracket (Item 11) bolt holes lines up with each insulator (Item 15) and lower rear cab mounting bracket (Item 12) bolt holes and install mounting hardware as follows.

   a. Install each hex head bolt (Item 5) with flat washer (Item 6), spring (Item 7), flat washer (Item 6), cab mounting insulator (Item 8), insulator retainer (Item 9) through upper rear cab mounting bracket (Item 11), insulator (Item 15) and lower rear cab mounting bracket (Item 12).

   b. From underneath the rear cab mounting crossmember (Item 16), install insulator retainer (Item 9), cab mounting insulator (Item 8), flat washer (Item 6) and hex lock nut (Item 10) on each hex head bolt (Item 5); do not tighten.

   c. With cab located properly, tighten front cab mounting bracket hex flanged head bolt and hex flanged lock nut (Items 1 and 2), both sides. Tighten to 200 to 240 Lbf-ft (270 to 325 N•m).

   d. With cab located properly, tighten rear cab mounting hex head bolts and hex lock nuts (Items 5 and 10). Tighten until top washer is flush with top of sill.

Install Front Cab Mounting Insulator for SBA and SFA 5000*i* Series with Rear Hard Mount after November 1999

Refer to Figure 95 (See Figure 95, page 117) for Items in parentheses.

1. Before the cab is lowered onto the chassis, if it was necessary to replace the front cab mounting insulator (Item 16), driver side shown. Install as follows.

2. Install front cab mounting insulator (Item 16) to chassis front cab mounting bracket (Item 6), both sides. Install two hex flanged head bolts (Item 18) through front cab mounting insulator and chassis front cab mounting bracket and install two hex flanged lock nuts (Item 17). Tighten to 115 to 140 Lbf-in (13 to 16 N•m).

3. Repeat procedure to install passenger side front cab mounting insulator.

Install SBA and SFA Cab for 5000*i* Series with Rear Hard Mount after November 1999

Refer to Figure 95 (See Figure 95, page 117) for Items in parentheses.

1. To install SBA and SFA cab for 5000*i* series with rear hard mount after November 1999, use the following procedure.

NOTE – Use an overhead crane and cab lifting fixture when installing cab on chassis. Pad lifting fixture to prevent damage to cab assembly.

2. Carefully lift cab into position over chassis.

3. Carefully lower cab down to chassis. Position cab so each front cab mounting bracket (Item 5) bolt hole lines up with front cab mounting insulator (Item 16) bolt hole and chassis front cab mounting bracket (Item 6) on each frame rail, then install mounting hardware as follows.

a. Install hex head bolt (Item 1) with flat washer (Item 2) through front cab mounting bracket (Item 5), front cab mounting insulator (Item 16) and chassis front cab mounting bracket (Item 6), both sides.

b. Install front cab mounting safety stop (Item 3) and hex lock nut (Item 4) on hex head bolt (Item 1), both sides; do not tighten.

4. Position rear of cab so cab floor and upper rear cab mounting bracket (Item 13) bolt holes line up with each rear cab mounting insulators (Item 15) and lower rear cab mounting bracket (Item 14) bolt holes and install mounting hardware as follows.

   a. Install each hex head bolt (Item 7) with flat washer (Item 8), spring (Item 9), flat washer (Item 8), rear cab mounting insulator (Item 10), rear cab mounting insulator retainer (Item 11) through cab floor and upper rear cab mounting bracket (Item 13), rear cab mounting insulator (Item 15) and lower rear cab mounting bracket (Item 14).

   b. From underneath the rear cab mounting crossmember (Item 19), install rear cab mounting insulator (Item 10), flat washer (Item 8) and hex lock nut (Item 12) on each hex head bolt (Item 7); do not tighten.

   c. With cab located properly, tighten front cab mounting hex flanged head bolt and hex flanged lock nut (Items 1 and 4) both sides, tighten to 185 to 200 Lbf-ft (251 to 271 N•m).

   d. With cab located properly, tighten rear cab mounting hex head bolts and hex lock nuts (Items 7 and 12), tighten until top washer is flush with top of sill.

Install Front Cab Mounting Insulator for SBA Cab for 5000*i* Series with Rear Cab Air Suspension System after August 1994 and SFA Cab for 5000*i* Series with Rear Cab Air Suspension System after August 1996

Refer to Figure 96 (See Figure 96, page 120) for Items in parentheses.

1. Before the cab is lowered onto the chassis, if it was necessary to replace the front cab mounting insulator (Item 14), driver side shown. Install as follows.

2. Install front cab mounting insulator (Item 14) to chassis front cab mounting bracket (Item 6), both sides. Install two hex flanged head bolts (Item 16) through front cab mounting insulator and chassis front cab mounting bracket and install two hex flanged lock nuts (Item 15). Tighten to 115 to 140 Lbf-in (13 to 16 N•m).

3. Repeat procedure to install passenger side front cab mounting insulator.

Install SBA Cab for 5000*i* Series with Rear Cab Air Suspension System after August 1994 and SFA Cab for 5000*i* Series with Rear Cab Air Suspension System after August 1996

Refer to Figure 96 (See Figure 96, page 120) for Items in parentheses.

1. To install SBA and SFA cab for 5000*i* series with rear cab air suspension system, use the following procedure.

NOTE – Use an overhead crane and cab lifting fixture when installing cab on chassis. Pad lifting fixture to prevent damage to cab assembly.

2. Carefully lift cab into position over chassis.

3. Carefully lower cab down to chassis. Position cab so each front cab mounting bracket (Item 5) bolt hole lines up with front cab mounting insulator (Item 14) bolt hole and chassis front cab mounting bracket (Item 6) on each frame rail, then install mounting hardware as follows.

a. Install hex bolt with flat washer (Items 1 and 2) through front cab mounting bracket (Item 5), front cab mounting insulator (Item 14) and chassis front cab mounting bracket (Item 6), both sides.

b. Then install front cab mounting safety stop (Item 3) and hex lock nut (Item 4) on hex head bolt (Item 1), both sides; do not tighten.

4. Position rear of cab so bottom of cab floor and cab air suspension bracket mounting plate (Item 10) bolt holes line up with right side cab mounting bracket (Item 11) and left side cab mounting bracket (Item 12) bolt holes and install mounting hardware as follows.

   a. Install four hex flanged head bolts (Item 7), spacers (Item 8) and flat washers (Item 9) through cab floor and cab air suspension bracket mounting plate (Item 10) and thread into weld nuts of right side cab mounting bracket (Item 11) and left side cab mounting bracket (Item 12).

   b. With cab located properly, tighten front cab mounting bracket hex bolt and flanged hex lock nut (Items 1 and 4), tighten to 185 to 200 Lbf-ft (251 to 271 N•m).

   c. With cab located properly, tighten hex flanged head bolts (Item 7) into weld nuts of right side cab mounting bracket (Item 11) and left side cab mounting bracket (Item 12), tighten to 70 to 80 Lbf-ft (95 to 108.5 N•m).

Install Front Cab Mounting Insulator on Day Cab for 9100*i*, 9200*i*, 9400*i* and 9900*i* Models with Rear Hard Mount

Refer to Figure 97 (See Figure 97, page 122) for Items in parentheses.

1. Before the cab is lowered onto the chassis, if it was necessary to replace the front cab mounting insulator (Item 18), driver side shown. Install as follows.

2. Install front cab mounting insulator (Item 18) to chassis front cab mounting bracket (Item 7), both sides. Install two hex flanged head bolts (Item 20) through front cab mounting insulator and chassis front cab mounting bracket and install two hex flanged lock nuts (Item 19). Tighten to 115 to 140 Lbf-in (13 to 16 N•m).

3. Repeat procedure to install passenger side front cab mounting insulator.

Install Day Cab for 9100*i*, 9200*i*, 9400*i* and 9900*i* Models with Rear Hard Mount

Refer to Figure 97 (See Figure 97, page 122) for Items in parentheses.

1. To install day cab for 9100*i*, 9200*i*, 9400*i* and 9900*i* models with rear hard mount, use the following procedure.

NOTE – Use an overhead crane and cab lifting fixture when installing cab on chassis. Pad lifting fixture to prevent damage to cab assembly.

2. Carefully lift cab into position over chassis.

3. Carefully lower cab down to chassis. Position cab so front cab mounting bracket (Item 6) bolt hole lines up with front cab mounting insulator (Item 18) bolt hole and chassis front cab mounting bracket (Item 7) on each frame rail, then install mounting hardware as follows.

   a. Install hex head bolt with flat washer (Items 1 and 2) through front cab mounting bracket (Item 6), front cab mounting insulator (Item 18) and chassis front cab mounting bracket (Item 7), both sides.

   b. Then install front cab mounting safety stop (Item 3), flat washer (Item 4) and hex lock nut (Item 5) on hex head bolt (Item 1), both sides; do not tighten.

4. Position rear of cab so upper rear cab mounting bracket (Item 15) bolt holes line up with rear cab mounting insulator (Item 17) and lower rear cab mounting bracket (Item 16) bolt holes and install mounting hardware as follows.
   a. Install two hex bolts (Item 8) with flat washers (Item 9), springs (Item 10), rear rebound insulators (Item 11) and rebound insulator retainers (Item 12) through upper rear cab mounting bracket (Item 15), rear cab mounting insulators (Item 17) and lower rear cab mounting bracket (Item 16).
   b. Then install rebound insulator retainers (Item 13), rear rebound insulators (Item 11) and flanged hex lock nuts (Item 14) on hex head bolts (Item 8); do not tighten.
   c. Front cab mounting brackets (Item 6) and chassis front cab mounting brackets (Item 7) to be balanced to equal distance laterally to assure that cab is square to chassis before tightening bolts.
   d. With cab located properly, tighten front cab mounting hex head bolt and hex flanged lock nut (Items 1 and 5), both sides. Tighten to 145 to 175 Lbf-ft (197 to 237 N•m).
   e. With cab located properly, tighten rear cab mounting hex bolts and hex flanged lock nuts (Items 8 and 14). Tighten bolts until top washer is flush with top of sill.

Install Front Cab Mounting Insulator on Day Cab for 9200*i* Models with Detroit Diesel Engines and with Rear Cab Air Suspension System before January 1997

Refer to Figure 98 (See Figure 98, page 125) for Items in parentheses.

1. Before the cab is lowered onto the chassis, if it was necessary to replace the front cab mounting insulator (Item 13), driver side shown. Install as follows.

2. Install front cab mounting insulator (Item 13) to chassis front cab mounting bracket (Item 7), both sides. Install two hex flanged head bolts (Item 15) through front cab mounting insulator and chassis front cab mounting bracket and install two hex flanged lock nuts (Item 14). Tighten to 115 to 140 Lbf-in (13 to 16 N•m).

3. Repeat procedure to install passenger side front cab mounting insulator.

Install Day Cab for 9200*i* Models with Detroit Diesel Engines and with Rear Cab Air Suspension System before January 1997

Refer to Figure 98(See Figure 98, page 125) for Items in parentheses.

1. To install day cab for 9200*i* models with Detroit diesel engines and with rear cab air suspension system before January 1997, use the following procedure.

NOTE – Use an overhead crane and cab lifting fixture when installing cab on chassis. Pad lifting fixture to prevent damage to cab assembly.

2. Carefully lift cab into position over chassis.

3. Carefully lower cab down to chassis. Position cab so front cab mounting bracket (Item 6) bolt hole lines up with front cab mounting insulator (Item 13) bolt hole and chassis front cab mounting bracket (Item 7) on each frame rail, both sides, then install mounting hardware as follows.
   a. Install hex head bolt with flat washer (Items 1 and 2) through front cab mounting bracket (Item 6), front cab mounting insulator (Item 13) and chassis front cab mounting bracket (Item 7), both sides.
   b. Then install front cab mounting safety stop (Item 3), flat washer (Item 4) and hex lock nut (Item 5) on hex head bolt (Item 1), both sides; do not tighten.

4. Position rear of cab so cab floor and rear cab sill bracket (Item 11) bolt holes line up with cab air suspension system (Item 12) bolt holes and install mounting hardware as follows.
   a. Install two hex flanged head bolts (Item 8) with spacers (Item 9) and four flat washers (Item 10), two on each bolt (Item 8), through cab floor and rear cab sill bracket (Item 11) and thread into weld nuts of cab air suspension system (Item 12).
   b. With cab located properly, tighten front cab mounting hex head bolt and hex flanged lock nut (Items 1 and 5), both sides. Tighten to 185 to 200 Lbf-ft (251 to 271 N•m).
   c. With cab located properly, tighten hex flanged head bolts (Item 8) into weld nuts of cab air suspension system (Item 12), tighten to 70 to 80 Lbf-ft (95 to 108.5 N•m).

Install Front Cab Mounting Insulator on Day Cab for 9100*i* and 9200*i* Models without Detroit Diesel Engines and with Rear Cab Air Suspension System after January 1997

Refer to Figure 98 (See Figure 98, page 125) for Items in parentheses.

1. Before the cab is lowered onto the chassis, if it was necessary to replace the front cab mounting insulator (Item 13), driver side shown. Install as follows.

2. Install front cab mounting insulator (Item 13) to chassis front cab mounting bracket (Item 7), both sides. Install two hex flanged head bolts (Item 15) through front cab mounting insulator and chassis front cab mounting bracket and install two hex flanged lock nuts (Item 14). Tighten to 115 to 140 Lbf-in (13 to 16 N•m).

3. Repeat procedure to install passenger side front cab mounting insulator.

Install Day Cab for 9100*i* and 9200*i* Models without Detroit Diesel Engines and with Rear Cab Air Suspension System after January 1997

Refer to Figure 98(See Figure 98, page 125) for Items in parentheses.

1. To install day cab for 9100*i* and 9200*i* models without Detroit diesel engines and with rear cab air suspension system, use the following procedure.

NOTE – Use an overhead crane and cab lifting fixture when installing cab on chassis. Pad lifting fixture to prevent damage to cab assembly.

2. Carefully lift cab into position over chassis.

3. Carefully lower cab down to chassis. Position cab so front cab mounting bracket (Item 6) bolt hole lines up with front cab mounting insulator (Item 13) bolt hole and chassis front cab mounting bracket (Item 7) on each frame rail, both sides, then install mounting hardware as follows.
   a. Install hex head bolt with flat washer (Items 1 and 2) through front cab mounting bracket (Item 6), front cab mounting insulator (Item 13) and chassis front cab mounting bracket (Item 7), both sides.
   b. Then install front cab mounting safety stop (Item 3), flat washer (Item 4) and hex lock nut (Item 5) on hex head bolt (Item 1) , both sides; do not tighten.

4. Position rear of cab so cab floor and rear cab sill bracket (Item 11) bolt holes line up with cab air suspension system (Item 12) bolt holes and install mounting hardware as follows.
   a. Install two hex flanged head bolts (Item 8) with spacers (Item 9) and four flat washers (Item 10), two on each bolt (Item 8), through cab floor and rear cab sill bracket (Item 11) and thread into weld nuts of cab air suspension system (Item 12).

b. With cab located properly, tighten front cab mounting hex head bolt and hex flanged lock nut (Items 1 and 5), both sides. Tighten to 185 to 200 Lbf-ft (251 to 271 N•m).

c. With cab located properly, tighten hex flanged head bolts (Item 8) into weld nuts of cab air suspension system (Item 12), tighten to 70 to 80 Lbf-ft (95 to 108.5 N•m).

Install Front Cab Mounting Insulator on Day Cab for 9200*i* Models with Detroit Diesel Engines and with Rear Cab Air Suspension System before March 1997

Refer to Figure 99 (See Figure 99, page 128) for Items in parentheses.

1. Before the cab is lowered onto the chassis, if it was necessary to replace the front cab mounting insulator (Item 13), driver side shown. Install as follows.

2. Install front cab mounting insulator (Item 13) to chassis front cab mounting bracket (Item 7), both sides. Install two hex flanged head bolts (Item 15) through front cab mounting insulator and chassis front cab mounting bracket and install two hex flanged lock nuts (Item 14). Tighten to 115 to 140 Lbf-in (13 to 16 N•m).

3. Repeat procedure to install passenger side front cab mounting insulator.

Install Day Cab for 9200*i*Models with Detroit Diesel Engines and with Rear Cab Air Suspension System before March 1997

Refer to Figure 99(See Figure 99, page 128) for Items in parentheses.

1. To install day cab for 9200*i* models with Detroit diesel engines and with rear cab air suspension system before March 1997, use the following procedure.

NOTE – Use an overhead crane and cab lifting fixture when installing cab on chassis. Pad lifting fixture to prevent damage to cab assembly.

2. Carefully lift cab into position over chassis.

3. Carefully lower cab down to chassis. Position cab so front cab mounting bracket (Item 6) bolt hole lines up with front cab mounting insulator (Item 13) bolt hole and chassis front cab mounting bracket (Item 7) on each frame rail, both sides, then install mounting hardware as follows.

   a. Install hex head bolt with flat washer (Items 1 and 2) through front cab mounting bracket (Item 6), front cab mounting insulator (Item 13) and chassis front cab mounting bracket (Item 7), both sides.

   b. Then install front cab mounting safety stop (Item 3), flat washer (Item 4) and hex lock nut (Item 5) on hex head bolt (Item 1), both sides; do not tighten.

4. Position rear of cab so cab floor and rear cab sill bracket (Item 11) bolt holes line up with cab air suspension system (Item 12) bolt holes and install mounting hardware as follows.

   a. Install two hex flanged head bolts (Item 8) with spacers (Item 9) and four flat washers (Item 10), two on each bolt (Item 8), through cab floor and rear cab sill bracket (Item 11) and thread into weld nuts of cab air suspension system (Item 12).

   b. With cab located properly, tighten front cab mounting hex head bolt and hex flanged lock nut (Items 1 and 5), both sides. Tighten to 185 to 200 Lbf-ft (251 to 271 N•m).

   c. With cab located properly, tighten hex flanged head bolts (Item 8) into weld nuts of cab air suspension system (Item 12), tighten to 70 to 80 Lbf-ft (95 to 108.5 N•m).

Install Front Cab Mounting Insulator on Day Cab for 9100*i* and 9200*i* Models without Detroit Diesel Engines and with Rear Cab Air Suspension System after March 1997

Refer to Figure 99 (See Figure 99, page 128) for Items in parentheses.

1. Before the cab is lowered onto the chassis, if it was necessary to replace the front cab mounting insulator (Item 13), driver side shown. Install as follows.

2. Install front cab mounting insulator (Item 13) to chassis front cab mounting bracket (Item 7), both sides. Install two hex flanged head bolts (Item 15) through front cab mounting insulator and chassis front cab mounting bracket and install two hex flanged lock nuts (Item 14). Tighten to 115 to 140 Lbf-in (13 to 16 N•m).

3. Repeat procedure to install passenger side front cab mounting insulator.

Install Day Cab for 9100*i* and 9200*i* Models without Detroit Diesel Engines and with Rear Cab Air Suspension System after march 1997

Refer to Figure 99(See Figure 99, page 128) for Items in parentheses.

1. To install day cab for 9100*i* and 9200*i* models without Detroit diesel engines and with rear cab air suspension system after March 1997, use the following procedure.

NOTE – Use an overhead crane and cab lifting fixture when installing cab on chassis. Pad lifting fixture to prevent damage to cab assembly.

2. Carefully lift cab into position over chassis.

3. Carefully lower cab down to chassis. Position cab so front cab mounting bracket (Item 6) bolt hole lines up with front cab mounting insulator (Item 13) bolt hole on chassis front cab mounting bracket (Item 7) on each frame rail, both sides, then install mounting hardware as follows.
   a. Install hex head bolt with flat washer (Items 1 and 2) through front cab mounting bracket (Item 6), front cab mounting insulator (Item 13) and chassis front cab mounting bracket (Item 7), both sides.
   b. Then install front cab mounting safety stop (Item 3), flat washer (Item 4) and hex lock nut (Item 5) on hex head bolt (Item 1), both sides; do not tighten.

4. Position rear of cab so cab floor and rear cab sill bracket (Item 11) bolt holes line up with cab air suspension system (Item 12) bolt holes and install mounting hardware as follows.
   a. Install two hex flanged head bolts (Item 8) with spacers (Item 9) and four flat washers (Item 10), two on each bolt (Item 8), through cab floor and rear cab sill bracket (Item 11) and thread into weld nuts of cab air suspension system (Item 12).
   b. With cab located properly, tighten front cab mounting hex head bolt and hex flanged lock nut (Items 1 and 5), both sides. Tighten to 185 to 200 Lbf-ft (251 to 271 N•m).
   c. With cab located properly, tighten hex flanged head bolts (Item 8) into weld nuts of cab air suspension system (Item 12), tighten to 70 to 80 Lbf-ft (95 to 108.5 N•m).

Install Front Cab Mounting Insulator on Day Cab with High Rise Crossmember for 9100*i*, 9200*i*, 9400*i* and 9900*i* Models with Rear Cab Air Suspension System after December 2001

Refer to Figure 100 (See Figure 100, page 131) for Items in parentheses.

1. Before the cab is lowered onto the chassis, if it was necessary to replace the front cab mounting insulator (Item 13), driver side shown. Install as follows.

2. Install front cab mounting insulator (Item 13) to chassis front cab mounting bracket (Item 7), both sides. Install two hex flanged head bolts (Item 15) through front cab mounting insulator and chassis front cab mounting bracket and install two hex flanged lock nuts (Item 14). Tighten to 115 to 140 Lbf-in (13 to 16 N•m).

3. Repeat procedure to install passenger side front cab mounting insulator.

Install Day Cab with High Rise Crossmember for 9100*i*, 9200*i*, 9400*i* and 9900*i* Models with Rear Cab Air Suspension System after December 2001

Refer to Figure 100(See Figure 100, page 131) for Items in parentheses.

1. To install day cab for 9100*i*, 9200*i*, 9400*i* and 9900*i* models with rear cab air suspension system after December 2001, use the following procedure.

NOTE – Use an overhead crane and cab lifting fixture when installing cab on chassis. Pad lifting fixture to prevent damage to cab assembly.

2. Carefully lift cab into position over chassis.

3. Carefully lower cab down to chassis. Position cab so front cab mounting bracket (Item 6) bolt hole lines up with front cab mounting insulator (Item 13) bolt hole and chassis front cab mounting bracket (Item 7) on each frame rail, both sides, then install mounting hardware as follows.
   a. Install hex head bolt with flat washer (Items 1 and 2) through front cab mounting bracket (Item 6), front cab mounting insulator (Item 13) and chassis front cab mounting bracket (Item 7), both sides.
   b. Then install front cab mounting safety stop (Item 3), flat washer (Item 4) and hex lock nut (Item 5) on hex head bolt (Item 1), both sides; do not tighten.

4. Position rear of cab so cab floor and rear cab sill bracket (Item 11) bolt holes line up with cab air suspension system (Item 12) bolt holes and install mounting hardware as follows.
   a. Install two hex flanged head bolts (Item 8) with spacers (Item 9) and four flat washers (Item 10), two on each bolt (Item 8), through cab floor and rear cab sill bracket (Item 11) and thread into weld nuts of cab air suspension system (Item 12).
   b. With cab located properly, tighten front cab mounting hex head bolt and hex flanged lock nut (Items 1 and 5), both sides. Tighten to 185 to 200 Lbf-ft (251 to 271 N•m).
   c. With cab located properly, tighten hex flanged head bolts (Item 8) into weld nuts of cab air suspension system (Item 12), tighten to 70 to 80 Lbf-ft (95 to 108.5 N•m).

Install Front Cab Mounting Insulator on Day Cab with Standard 7 Piece Crossmember for 9400*i* and 9900*i* Models with Rear Cab Air Suspension System after December 2001

Refer to Figure 101 (See Figure 101, page 134) for Items in parentheses.

1. Before the cab is lowered onto the chassis, if it was necessary to replace the front cab mounting insulator (Item 13), driver side shown. Install as follows.

2. Install front cab mounting insulator (Item 13) to chassis front cab mounting bracket (Item 7), both sides. Install two hex flanged head bolts (Item 15) through front cab mounting insulator and chassis front cab

mounting bracket and install two hex flanged lock nuts (Item 14). Tighten to 115 to 140 Lbf-in (13 to 16 N•m).

3. Repeat procedure to install passenger side front cab mounting insulator.

Install Day Cab with Standard 7 Piece Crossmember for 9400*i* and 9900*i* Models with Rear Cab Air Suspension System after December 2001

Refer to Figure 101(See Figure 101, page 134) for Items in parentheses.

1. To install day cab with standard 7 piece crossmember for 9400*i* and 9900*i* models with rear cab air suspension system after December 2001, use the following procedure.

NOTE – Use an overhead crane and cab lifting fixture when installing cab on chassis. Pad lifting fixture to prevent damage to cab assembly.

2. Carefully lift cab into position over chassis.

3. Carefully lower cab down to chassis. Position cab so front cab mounting bracket (Item 6) bolt hole lines up with front cab mounting insulator (Item 13) bolt hole and chassis front cab mounting bracket (Item 7) on each frame rail, both sides, then install mounting hardware as follows.
   a. Install hex head bolt with flat washer (Items 1 and 2) through front cab mounting bracket (Item 6), front cab mounting insulator (Item 13) and chassis front cab mounting bracket (Item 7), both sides.
   b. Then install front cab mounting safety stop (Item 3), flat washer (Item 4) and hex lock nut (Item 5) on hex head bolt (Item 1), both sides; do not tighten.

4. Position rear of cab so cab floor and rear cab sill bracket (Item 11) bolt holes line up with cab air suspension system (Item 12) bolt holes and install mounting hardware as follows.
   a. Install two hex flanged head bolts (Item 8) with spacers (Item 9) and flat washers (Item 10) through cab floor and rear cab sill bracket (Item 11) and thread into weld nuts of cab air suspension system (Item 12).
   b. With cab located properly, tighten front cab mounting hex head bolt and hex lock nut (Items 1 and 5), both sides. Tighten to 185 to 200 Lbf-ft (251 to 271 N•m).
   c. With cab located properly, tighten hex flanged head bolts (Item 8) into weld nuts of cab air suspension system (Item 12), tighten to 70 to 80 Lbf-ft (95 to 108.5 N•m).

Install Front Cab Mounting Insulator on 51 Inch or 72 Inch Pro-Sleeper® Cab for 9200*i* and 9400*i* Models with Rear Cab Air Suspension System

Refer to Figure 102 (See Figure 102, page 137) for Items in parentheses.

1. Before the cab is lowered onto the chassis, if it was necessary to replace the front cab mounting insulator (Item 12), driver side shown. Install as follows.

2. Install front cab mounting insulator (Item 12) to chassis front cab mounting bracket (Item 7), both sides. Install two hex flanged head bolts (Item 14) through front cab mounting insulator and chassis front cab mounting bracket and install two hex flanged lock nuts (Item 13). Tighten to 115 to 140 Lbf-in (13 to 16 N•m).

3. Repeat procedure to install passenger side front cab mounting insulator.

Install 51 Inch or 72 Inch Pro-Sleeper® Cab for 9200*i* and 9400*i* Models with Rear Cab Air Suspension System

Refer to Figure 102(See Figure 102, page 137) for Items in parentheses.

1. To install 51 inch or 72 inch pro-sleeper® cab for 9200*i* and 9400*i* models with rear cab air suspension system, use the following procedure.

NOTE – Use an overhead crane and cab lifting fixture when installing cab on chassis. Pad lifting fixture to prevent damage to cab assembly.

2. Carefully lift cab into position over chassis.

3. Carefully lower cab down to chassis. Position cab so front cab mounting bracket (Item 6) bolt hole lines up with front cab mounting insulator (Item 12) bolt hole and chassis front cab mounting bracket (Item 7) on each frame rail, both sides, then install mounting hardware as follows.
   a. Install hex head bolt with flat washer (Items 1 and 2) through front cab mounting bracket (Item 6), front cab mounting insulator (Item 12) and chassis front cab mounting bracket (Item 7), both sides.
   b. Then install front cab mounting safety stop (Item 3), flat washer (Item 4) and hex lock nut (Item 5) on hex head bolt (Item 1), both sides; do not tighten.

4. Position rear of cab so cab floor and rear cab sill bracket (Item 10) bolt holes line up with cab air suspension system (Item 11) bolt holes and install mounting hardware as follows.
   a. Install six hex head bolts (Item 8) and flat washers (Item 9) through rear cab sill bracket (Item 10) and thread into weld nuts of cab air suspension system (Item 11).
   b. With cab located properly, tighten front cab mounting hex head bolt and hex lock nut (Items 1 and 5), both sides. Tighten to 185 to 200 Lbf-ft (251 to 271 N•m).
   c. With cab located properly, tighten six hex flanged head bolts (Item 8) into weld nuts of cab air suspension system (Item 11), tighten to 70 to 80 Lbf-ft (95 to 108.5 N•m).

Install Front Cab Mounting Insulator on 51 Inch Pro-Sleeper® Cab for 9200*i*, 9400*i* and 9900*i* Models with Rear Cab Air Suspension System on Vehicles after April 2000

Refer to Figure 103 (See Figure 103, page 140) for Items in parentheses.

1. Before the cab is lowered onto the chassis, if it was necessary to replace the front cab mounting insulator (Item 11), driver side shown. Install as follows.

2. Install front cab mounting insulator (Item 11) to chassis front cab mounting bracket (Item 7), both sides. Install two hex flanged head bolts (Item 13) through front cab mounting insulator and chassis front cab mounting bracket and install two hex flanged lock nuts (Item 12). Tighten to 115 to 140 Lbf-in (13 to 16 N•m).

3. Repeat procedure to install passenger side front cab mounting insulator.

Install 51 Inch Pro-Sleeper® Cab for 9200*i*, 9400*i* and 9900*i* Models with Rear Cab Air Suspension System on Vehicles after April 2000

Refer to Figure 103(See Figure 103, page 140) for Items in parentheses.

1. To install 51 inch pro-sleeper® cab for 9200*i* and 9400*i* models with rear cab air suspension system on vehicles after April 2000, use the following procedure.

NOTE – Use an overhead crane and cab lifting fixture when installing cab on chassis. Pad lifting fixture to prevent damage to cab assembly.

2. Carefully lift cab into position over chassis.

3. Carefully lower cab down to chassis. Position cab so front cab mounting bracket (Item 6) bolt hole lines up with front cab mounting insulator (Item 11) bolt hole on chassis front cab mounting bracket (Item 7) on each frame rail, both sides, then install mounting hardware as follows.

   NOTE – On 9900 vehicles manufactured at Escobedo there will be two flat washers (Item 2) found on each side under hex head bolt (Item 1).

   a. Install hex head bolt with flat washer (Items 1 and 2) through front cab mounting bracket (Item 6), front cab mounting insulator (Item 11) and chassis front cab mounting bracket (Item 7), both sides.

   b. Then install front cab mounting safety stop (Item 3), flat washer (Item 4) and hex lock nut (Item 5) on hex head bolt (Item 1), both sides; do not tighten.

4. Position rear of cab so rear cab sill bracket (Item 9) bolt holes line up with cab air suspension system (Item 10) bolt holes and install mounting hardware as follows.

   a. Install six hex head screw sems assemblies (Item 8) through cab air suspension system (Item 10) and thread into weld nuts of rear cab sill bracket (Item 9).

   b. With cab located properly, tighten front cab mounting hex head bolt and hex lock nut (Items 1 and 5), both sides. Tighten to 185 to 200 Lbf-ft (251 to 271 N•m).

   c. With cab located properly, tighten six hex head screw sems assemblies (Item 8) into weld nuts of rear cab sill bracket (Item 9), tighten to 70 to 80 Lbf-ft (95 to 108.5 N•m).

Install Front Cab Mounting Insulator on 72 Inch Pro-Sleeper® Cab for 9200*i*, 9400*i* and 9900*i* Models with Rear Cab Air Suspension System on Vehicles after April 2000

Refer to Figure 104 (See Figure 104, page 143) for Items in parentheses.

1. Before the cab is lowered onto the chassis, if it was necessary to replace the front cab mounting insulator (Item 11), driver side shown. Install as follows.

2. Install front cab mounting insulator (Item 11) to chassis front cab mounting bracket (Item 7), both sides. Install two hex flanged head bolts (Item 13) through front cab mounting insulator and chassis front cab mounting bracket and install two hex flanged lock nuts (Item 12). Tighten to 115 to 140 Lbf-in (13 to 16 N•m).

3. Repeat procedure to install passenger side front cab mounting insulator.

Install 72 Inch Pro-Sleeper® Cab for 9200*i*, 9400*i* and 9900*i* Models with Rear Cab Air Suspension System on Vehicles after April 2000

Refer to Figure 104(See Figure 104, page 143) for Items in parentheses unless otherwise noted.

1. To install 72 inch pro-sleeper® cab for 9200*i* and 9400*i* models with rear cab air suspension system on vehicles after April 2000, use the following procedure.

NOTE – Use an overhead crane and cab lifting fixture when installing cab on chassis. Pad lifting fixture to prevent damage to cab assembly.

2. Carefully lift cab into position over chassis.

3. Carefully lower cab down to chassis. Position cab so front cab mounting bracket (Item 6) bolt hole lines up with front cab mounting insulator (Item 11) bolt hole and chassis front cab mounting bracket (Item 7) on each frame rail, both sides, then install mounting hardware as follows.

   NOTE – On 9900 vehicles manufactured at Escobedo there will be two flat washers (Item 2) found on each side under hex head bolt (Item 1).

   a. Install hex head bolt with flat washer (Items 1 and 2) through front cab mounting bracket (Item 6), front cab mounting insulator (Item 11) and chassis front cab mounting bracket (Item 7), both sides.

   b. Then install front cab mounting safety stop (Item 3), flat washer (Item 4) and hex lock nut (Item 5) on hex head bolt (Item 1), both sides; do not tighten.

4. Position rear of cab so cab floor and rear cab sill bracket (Item 9, Figure 103)(See Figure 103, page 140) bolt holes line up with cab air suspension system (Item 10) bolt holes and install mounting hardware as follows.

   a. Install six hex head screw sems assemblies (Item 8) through cab air suspension system (Item 10) and thread into weld nuts of rear cab sill bracket (Item 9).

   b. With cab located properly, tighten front cab mounting hex head bolt and hex lock nut (Items 1 and 5), both sides. Tighten to 185 to 200 Lbf-ft (251 to 271 N•m).

   c. With cab located properly, tighten six hex head screw sems assemblies (Item 8) into weld nuts of rear cab sill bracket (Item 9, Figure 103)(See Figure 103, page 140), tighten to 70 to 80 Lbf-ft (95 to 108.5 N•m).

General Guidelines For Installation

The following steps provide a guideline sequence for cab installation. The details of the installation procedure vary for different vehicle models, and for special equipment and accessories.

1. Install transmission gearshift lever. Refer to **GROUP – 13, TRANSMISSION** in the **Master Service Manual**.

2. Connect heater hoses, clutch linkage, engine shut-off control cable, brake air lines and hoses, and auxiliary oil filter hose.

3. Connect wiring harness connectors to cab dash and floor panels.

4. Connect accelerator linkage and cruise-control, if so equipped.

5. Install steering gear universal joint at steering gear.

6. Connect battery ground cable and frame-to-cab ground cable.

7. Attach any other connections between cab and frame, if required.

8. Connect air conditioning system lines, if so equipped and charge air conditioning system. Refer to **GROUP 16 – CAB** in the **Master Service Manual** for proper procedures.

9. Square cab relative to frame. Refer to **ADJUSTMENTS, CAB SQUARING** (See CAB SQUARING, page 323).

10. Start vehicle and charge air system, also check for leaks at all coolant hose connections.

11. On SBA 5000*i* series (with fiberglass tilt hood), SFA 5000*i* series and 9000*i* series, install air cleaner ducts, if required and close tilt hood and latch hood latches on both sides.

12. On SBA 5000*i* series (with butterfly hood), install air cleaner ducts, stay rods and hood. Refer to **GROUP 09 – HOOD, GRILLE, AND FENDERS** in the **Master Service Manual**.

13. Set parking brake and remove blocks from vehicle wheels. Road test vehicle before returning it to service.

Paint as Required

To paint a replaced or repaired panel, refer to **GROUP 16 – PAINT** in the **Master Service Manual**.

Reinstall Related Components

To install removed components, refer to the proper section in the **Master Service Manual**.

5.38. CAB AIR RIDE SYSTEM FOR 9200//9400//9900/ DAY CAB MODELS WITHOUT DETROIT DIESEL ENGINES BEFORE DECEMBER 2001

Refer to Figure 105 (See Figure 105, page 145) for Items in parentheses.

The cab air ride system for 9200*i*, 9400*i* and 9900*i* day cab models without Detroit Diesel engines before December 2001 contains two air springs (bags) (Item 1), two shock absorbers (Items 2 and 3), and is controlled by the cab air ride valve assembly (Item 4). The air ride components are not interchangeable with different cab models.

The following components - nylon air lines (to air spring) (Item 5), elbow fittings (Items 6 and 7), tee fitting (Item 8), air springs (bags) (Item 1), cab air ride valve assembly (Item 4), shock absorbers (Items 2 and 3) and track bar rod (Item 9) - should be checked at the time the truck is being serviced. Immediate corrective action should be taken if a malfunction occurs.

NOTE – The height control valve (Item 4), air spring (bag) (Item 1) and shock absorbers (Items 2 and 3) are serviceable and can be replaced individually.

Periodically check tightness of all fasteners and air line fitting connections. Refer to the **TORQUE CHART** for (Figure 105) (See Figure 105, page 145) for proper tightening of all fasteners and air line fitting connections.

Install Cab Air Ride Shock Absorber

Refer to Figure 105 (See Figure 105, page 145) for Items in parentheses.

1. Install shock absorber (Item 2) as follows.
   a. Position shock absorber (Item 2) with mounting tabs at the top of shock absorber under air suspension upper mounting plate (Item 13) and mounting tabs at the bottom of shock absorber on top of air suspension lower mounting plate (Item 16).
   b. Install two hex head screw sems assemblies (Item 10) thru mounting tabs at the top of shock absorber (Item 2) into weld nuts on air suspension upper mounting plate (Item 13). Tighten hex head screw sems assemblies (Item 10) to 155 to 190 Lbf-in (17 to 21 N•m).
   c. Install two hex head screw sems assemblies (Item 10) thru mounting tabs at the bottom of shock absorber (Item 2) into weld nuts on air suspension lower mounting plate (Item 16). Tighten hex head screw sems assemblies (Item 10) to 155 to 190 Lbf-in (17 to 21 N•m).

2. Install shock absorber (Item 3) as follows.
   a. Position flat washer (Item 14) and spacer (Item 15) over bottom shaft of shock absorber (Item 3) and install shock absorber shaft with flat washer and spacer into mounting hole of air suspension lower mounting plate (Item 16).
   b. Install two flat washers (Item 12) and hex flanged lock nut (Item 11) onto bottom shaft of shock absorber (Item 3). Tighten hex flanged lock nut (Item 11) to 10 to 15 Lbf-ft (14 to 20 N•m).
   c. Position mounting tabs at the top of shock absorber (Item 3) under air suspension upper mounting plate (Item 13).
   d. Install two hex head screw sems assemblies (Item 10) thru mounting tabs at the top of shock absorber (Item 3) into weld nuts on air suspension upper mounting plate (Item 13). Tighten hex head screw sems assemblies (Item 10) to 155 to 190 Lbf-in (17 to 21 N•m).

Install Cab Air Ride Air Springs (Bags)

Refer to Figure 105 (See Figure 105, page 145) for Items in parentheses unless otherwise noted.

1. Position bottom mounting studs of both air springs (bags) (Item 1) into mounting holes of air suspension lower mounting plate (Item 16).

2. Release jack placed between frame rail flange and back of cab floor frame (Figure 106) (See Figure 106, page 148), lower cab, making sure top mounting studs of both air springs (bags) (Item 1) are positioned into mounting holes of air suspension upper mounting plate (Item 13).

3. Secure both air springs (bags) (Item 1) by installing the push-on rings (Item 17) over the top and bottom studs of each air spring (bag).

4. Push push to connect elbow fitting (Item 6) into bottom of passenger side air spring (bag) (Item 1). Refer to the **TORQUE CHART** for proper tightening of air line fittings.

5. Push push to connect tee fitting (Item 8) into bottom of driver side air spring (bag) (Item 1). Refer to the **TORQUE CHART** for proper tightening of air line fittings.

6. If disconnected, push nylon air line (to air spring) (Item 5) from push to connect tee fitting (Item 8) at bottom of driver side air spring (bag) (Item 1) into push to connect elbow fitting (Item 6) at bottom of passenger side air spring (bag) (Item 1). Refer to the **TORQUE CHART** for proper tightening of air line fittings.

7. If disconnected, push nylon air line (to air spring) (Item 5) from push to connect elbow fitting (Item 6) at bottom of passenger side air spring (bag) (Item 1) into push to connect tee fitting (Item 8) at bottom of driver side air spring (bag) (Item 1). Refer to the **TORQUE CHART** for proper tightening of air line fittings.

8. If disconnected, push nylon air line (to air spring) (Item 5) from push to connect tee fitting (Item 8) at bottom of driver side air spring (bag) (Item 1) into push to connect elbow fitting (Item 7) at bottom of cab air ride valve assembly (Item 4). Refer to the **TORQUE CHART** for proper tightening of air line fittings.

9. If disconnected, push nylon air line (to air spring) (Item 5) from push to connect elbow fitting (Item 7) at bottom of cab air ride valve assembly (Item 4) into push to connect tee fitting (Item 8) at bottom of driver side air spring (bag) (Item 1). Refer to the **TORQUE CHART** for proper tightening of air line fittings.

10. Build up air pressure and check for air spring operation. Also check for air leaks. Correct as necessary.

11. Close hood and latch it on both sides.

12. Check cab ride height between bottom of air suspension upper mounting plate to top of crossmember the air suspension lower mounting plate is mounted on. Cab air suspension ride height is 7 3/4 inches (196.9 mm) (Figure 168) (See Figure 168, page 325). If adjustment is required, refer to **ADJUSTMENTS, CAB AIR RIDE SYSTEM FOR 9200*i*/9400*i*/9900*i* DAY CAB MODELS WITHOUT DETROIT DIESEL ENGINES BEFORE DECEMBER 2001** (See CAB AIR RIDE SYSTEM FOR 9200*i*/9400*i*/9900*i* DAY CAB MODELS WITHOUT DETROIT DIESEL ENGINES BEFORE DECEMBER 2001, page 325).

Install Track Bar Rod

Refer to Figure 105 (See Figure 105, page 145) for Items in parentheses.

1. Install track bar rod (Item 9) as follows.
   a. Position track bar rod (Item 9) into track bar mount bracket (Item 18) and install hex flanged head bolt (Item 19) from the rear and install hex flanged lock nut (Item 20). Tighten hex flanged head bolt and hex flanged lock nut to 100 to 120 Lbf-ft (136 to 163 N•m).
   b. Position the other end of track bar rod (Item 9) into track bar mount of air suspension upper mounting plate (Item 13) and install hex flanged head bolt (Item 21) from the rear and install hex lock nut (Item 22). Tighten hex flanged head bolt and hex lock nut to 100 to 120 Lbf-ft (136 to 163 N•m).

Install Cab Air Ride Valve

Refer to Figure 107 (See Figure 107, page 150) for Items in parentheses unless otherwise noted.

1. Position cab air ride valve (Item 2) in place on track bar mount bracket (Item 9) and install two hex head bolts (Item 10) with two flat washers (Item 11) thru cab air ride valve and track bar mount bracket and install two hex lock nuts (Item 12). Tighten to 8 to 10 Lbf-ft (11 to 14 N•m).

2. Push push to connect elbow fitting (Item 8) into bottom of cab air ride valve (Item 2). Refer to the **TORQUE CHART** for proper tightening of air line fittings.

3. Push air line (supply) (Item 1) into push to connect elbow fitting (Item 8) of cab air ride valve (Item 2). Refer to the **TORQUE CHART** for proper tightening of air line fittings.

4. Turn valve so dot (mark) on face of rotating selector is in the down position (Figure 164) (See Figure 164, page 295).

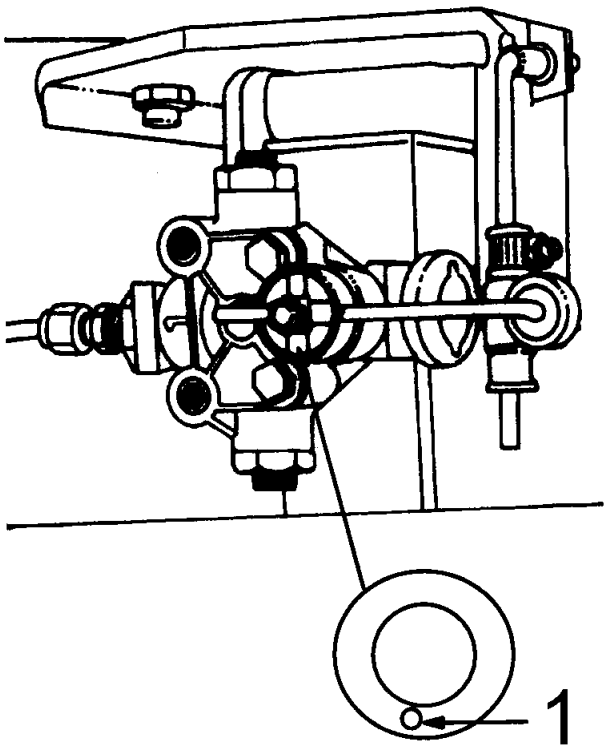

Figure 164 Location of Mark on Valve Adjuster Face

1. SHOWS LOCATION OF MARK (DOT) OR ARROW ON VALVE ADJUSTER FACE. MARK MUST FACE IN THE DOWN POSITION.

5. Install vertical adjuster rod (Item 5) into nyliner bushing (Item 6) and bracket (Item 7). Install flat washer (Item 4) over end of vertical adjuster rod and install cotter pin (Item 3) thru vertical adjuster rod.

6. Build up air pressure and check for air leaks.

7. Check cab ride height between bottom of air suspension upper mounting plate to top of crossmember the air suspension lower mounting plate is mounted on. Cab air suspension ride height is 7 3/4 inches (196.9 mm) (Figure 168) (See Figure 168, page 325). If adjustment is required, refer to **ADJUSTMENTS, CAB AIR RIDE SYSTEM FOR 9200*i*/9400*i*/9900*i* DAY CAB MODELS WITHOUT DETROIT DIESEL ENGINES BEFORE DECEMBER 2001** (See CAB AIR RIDE SYSTEM FOR 9200*i*/9400*i*/9900*i* DAY CAB MODELS WITHOUT DETROIT DIESEL ENGINES BEFORE DECEMBER 2001, page 325).

5.39. CAB AIR SUSPENSION SYSTEM FOR 9200*I*/9400*I*/9900*I* DAY CAB MODELS WITHOUT DETROIT DIESEL ENGINES AFTER DECEMBER 2001

Refer to Figure 108 (See Figure 108, page 152) for Items in parentheses.

The cab air suspension system for 9200*i*, 9400*i* and 9900*i* day cab models without Detroit Diesel engines after December 2001 contains one air spring (bag) (Item 5), two shock absorbers (Items 6 and 7), and is controlled by the height control valve (Item 8). The air suspension system components are not interchangeable with different cab models.

The following components - air line (to air spring) (Item 14), hex nipple fitting (Item 12) and elbow fittings (Items 13 and 26), air spring (bag) (Item 5), height control valve (Item 8), shock absorbers (Items 6 and 7) and lateral

control rod (Item 4) - should be checked at the time the truck is being serviced. Immediate corrective action should be taken if a malfunction occurs.

NOTE – The height control valve (Item 8), air spring (bag) (Item 5) and shock absorbers (Items 6 and 7) are serviceable and can be replaced individually.

Periodically check tightness of all fasteners and air line fitting connections. Refer to the **TORQUE CHART** for (Figure 108) (See Figure 108, page 152) for proper tightening of all fasteners and air line fitting connections.

Install Height Control Valve

NOTE – If there is an attempt to disassemble or adjust fittings on the height control valve (Item 8, Figure 108) (See Figure 108, page 152), it will void the warranty. Contact the air suspension manufacturer for assistance.

Refer to Figure 109 (See Figure 109, page 155) for Items in parentheses.

1. Inspect height control valve (Item 5) to insure drive bearing notch (Item 10) is located on “SUPS” port side of valve. If not, loosen pan head bearing screw (Item 11), but not remove, and pull height control valve arm (Item 7) loose from drive bearing (Item 12). Rotate drive bearing until drive bearing notch is in correct position, then secure height control valve lever by tightening pan head bearing screw. Tighten to 40 to 50 Lbf-in (4.5 to 5.6 N•m).

Refer to Figure 108 (See Figure 108, page 152) for Items in parentheses.

2. Position height control valve (Item 8) on mounting bracket of cab mounting plate (Item 1).

3. Install two hex head bolts (Item 15) thru height control valve and mounting bracket of cab mounting plate (Item 1) and install hex lock nuts (Item 16). Tighten hex head bolts and hex lock nuts to 8 to 10 Lbf-ft (11 to 14 N•m).

Refer to Figure 109 (See Figure 109, page 155) for Items in parentheses.

4. Push air line (supply) (Item 2) into compression nut (Item 1) of elbow fitting (Item 13) in “SUPPLY” port of height control valve (Item 5). Refer to **TORQUE CHART** for proper tightening of compression nut.

5. Push air line (to air spring) (Item 4) into compression nut (Item 3) of elbow fitting (Item 14) in “SUSP” port of height control valve (Item 5). Refer to **TORQUE CHART** for proper tightening of compression nut.

6. Install height control valve linkage (Item 6) onto threaded ball pivot of height control valve arm (Item 7) by positioning the height control valve linkage socket over threaded ball pivot and pushing linkage socket onto threaded ball pivot until it snaps in place, latch the linkage clip.

7. Build up air pressure and check for air leaks.

8. Check cab ride height between bottom of lateral control arm and top of air suspension lower mounting plate of cab air suspension system (Figure 170) (See Figure 170, page 327). Cab air suspension ride height is 2 inches (50.8 mm). If adjustment is required, refer to **ADJUSTMENTS, CAB AIR SUSPENSION SYSTEM FOR 9200*i*/9400*i*/9900*i* DAY CAB MODELS WITHOUT DETROIT DIESEL ENGINES AFTER DECEMBER 2001** (See CAB AIR SUSPENSION SYSTEM FOR 9200*i*/9400*i*/9900*i* DAY CAB MODELS WITHOUT DETROIT DIESEL ENGINES AFTER DECEMBER 2001, page 326).

Install Cab Air Suspension Shock Absorber

Refer to Figure 108 (See Figure 108, page 152) for Items in parentheses.

1. Install shock absorber (Item 6) as follows.
   a. Position top of shock absorber (Item 6) in place in shock mounting bracket of cab mounting plate (Item 1).
   b. Install hex head bolt (Item 18) from inboard side and install hex lock nut (Item 20). Tighten hex head bolt and hex lock nut (Items 18 and 20) to 40 to 50 Lbf-ft (54 to 68 N•m).
   c. Position bottom of shock absorber (Item 6) in place in shock mounting bracket of crossmember mounting plate (Item 3).
   d. Install hex head bolt (Item 18) from inboard side and install hex lock nut (Item 20). Tighten hex head bolt and hex lock nut (Items 18 and 20) to 40 to 50 Lbf-ft (54 to 68 N•m).
2. Install shock absorber (Item 7) as follows.
   a. Position top of shock absorber (Item 7) in place in shock mounting bracket of cab mounting plate (Item 1).
   b. Install hex head bolt (Item 18) from inboard side and install hex lock nut (Item 20). Tighten hex head bolt and hex lock nut (Items 18 and 20) to 40 to 50 Lbf-ft (54 to 68 N•m).
   c. Position bottom of shock absorber (Item 7) in place in shock mounting bracket of crossmember mounting plate (Item 3).
   d. Install hex head bolt (Item 18) from inboard side and install hex lock nut (Item 20). Tighten hex head bolt and hex lock nut (Items 18 and 20) to 40 to 50 Lbf-ft (54 to 68 N•m).

Install Cab Air Ride Air Spring (Bag)

Refer to Figure 108 (See Figure 108, page 152) for Items in parentheses.

1. Position air spring (bag) (Item 5) in place between cab mounting plate (Item 1) and crossmember mounting plate (Item 3).
2. Install socket countersunk flat head screw (Item 22) thru crossmember mounting plate (Item 3) into bottom of air spring (bag). Tighten to 2 to 4 Lbf-ft (3 to 5 N•m).
3. Install hex head bolt (Item 21) with lock washer (Item 23) thru cab mounting plate (Item 1) into top of air spring (bag) (item 5). Tighten to 2 to 4 Lbf-ft (3 to 5 N•m).
4. Install hex nipple fitting (Item 12) into top of air spring (bag) (Item 5) and tighten. Refer to **TORQUE CHART** for proper tightening of air line fittings.
5. Install elbow fitting (Item 13) onto hex nipple fitting (Item 12) of air spring (bag) (Item 5) and tighten. Refer to **TORQUE CHART** for proper tightening of air line fittings.
6. Push air line (to air spring) (Item 14) into compression nut of elbow fitting (Item 13) at top of air spring (bag) (Item 5). Refer to **TORQUE CHART** for proper tightening of compression nut.
7. Build up air pressure and check for air spring operation. Also check for air leaks. Correct as necessary.
8. Check cab ride height between bottom of lateral control arm and top of air suspension lower mounting plate of cab air suspension system (Figure 170) (See Figure 170, page 327). Cab air suspension ride height is 2

inches (50.8 mm). If adjustment is required, refer to **ADJUSTMENTS, CAB AIR RIDE SYSTEM FOR 9200*i*/9400*i*/9900*i* DAY CAB MODELS WITHOUT DETROIT DIESEL ENGINES AFTER DECEMBER 2001** (See CAB AIR SUSPENSION SYSTEM FOR 9200*i*/9400*i*/9900*i* DAY CAB MODELS WITHOUT DETROIT DIESEL ENGINES AFTER DECEMBER 2001, page 326).

Install Lateral Control Rod

Refer to Figure 108 (See Figure 108, page 152) for Items in parentheses.

1. Install lateral control rod (Item 4) as follows.
   a. Position lateral control rod (Item 4) in mounting bracket of crossmember mounting plate (Item 3) and install hex head bolt (Item 24) from the rear thru mounting bracket of crossmember mounting plate and lateral control rod and install hex lock nut (Item 25). Tighten to 40 to 45 Lbf-ft (54 to 61 N•m).
   b. Position lateral control rod (Item 4) in mounting bracket of cab mounting plate (Item 1) and install hex head bolt (Item 24) thru cab mounting plate and lateral control rod and install hex lock nut (Item 25). Tighten to 40 to 45 Lbf-ft (54 to 61 N•m).

5.40. CAB AIR SUSPENSION SYSTEM FOR 9200*I* DAY CAB MODELS WITH DETROIT DIESEL ENGINES BEFORE JANUARY 1997

Refer to Figure 110 (See Figure 110, page 158) for Items in parentheses.

The cab air suspension system for the 9200*i* day cab models with Detroit Diesel engines before January 1997 contains one air spring (bag) (Item 7), two shock absorbers (Items 8 and 9), and is controlled by the height control valve (Item 10). The air suspension assembly (Figure 110) (See Figure 110, page 158) needs no lubrication and very little maintenance.

The following components - air line (to air spring) (Item 16), hex nipple fitting (Item 14), elbow fitting (Item 15), air spring (bag) (Item 7), height control valve (Item 10), shock absorbers (Items 8 and 9) and lateral control rod (Item 6) - should be checked at the time the truck is being serviced. Immediate corrective action should be taken if a malfunction occurs.

NOTE – The height control valve (Item 10), air spring (bag) (Item 7) and shock absorbers (Items 8 and 9) are serviceable and can be replaced individually.

Periodically check tightness of all fasteners and air line fitting connections. Refer to the **TORQUE CHART** for (Figure 110) (See Figure 110, page 158) for proper tightening of all fasteners and air line fitting connections.

Install Height Control Valve

NOTE – If there is an attempt to disassemble or adjust fittings on the height control valve (Item 10, Figure 110) (See Figure 110, page 158), it will void the warranty. Contact the air suspension manufacturer for assistance.

Refer to Figure 110 (See Figure 110, page 158) for Items in parentheses.

1. Position height control valve (Item 10) in place on mounting bracket of crossmember mounting plate (Item 2).

2. Install two hex head bolts (Item 18) thru height control valve and mounting bracket of crossmember mounting plate (Item 2) and install two hex lock nuts (Item 19). Tighten to 8 to 10 Lbf-ft (11 to 14 N•m).

Refer to Figure 111 (See Figure 111, page 160) for Items in parentheses.

3. Install height control valve linkage (Item 4) onto threaded ball pivot of height control valve arm (Item 5) by positioning the height control valve linkage socket over threaded ball pivot and pushing linkage socket onto threaded ball pivot until it snaps in place, latch the linkage clip.

4. Push push to connect connector (Item 7) and air line (supply) (Item 1) into elbow fitting in “SUPPLY” port of height control valve (Item 3). Refer to **TORQUE CHART** for proper tightening of air line fittings.

5. Push air line (to air spring) (Item 2) into compression nut (Item 8) of elbow fitting in “SUSP” port of height control valve (Item 3). Refer to **TORQUE CHART** for proper tightening of air line fittings.

6. Build up air pressure and check for air leaks.

7. Check cab ride height between bottom of cab mounting plate and top of crossmember mounting plate. Cab air suspension ride height is 5 3/16 inches (131.8 mm) (Figure 172) (See Figure 172, page 329). If adjustment is required, refer to **ADJUSTMENTS, CAB AIR SUSPENSION SYSTEM FOR 9200*i* DAY CAB MODELS WITH DETROIT DIESEL ENGINES BEFORE JANUARY 1997** (See CAB AIR SUSPENSION SYSTEM FOR 9200*i* DAY CAB MODELS WITH DETROIT DIESEL ENGINES BEFORE JANUARY 1997, page 328).

Install Cab Air Suspension Shock Absorber

Refer to Figure 110 (See Figure 110, page 158) for Items in parentheses.

1. Install shock absorber (Item 9) as follows.
   a. Position bottom shaft of shock absorber (Item 9) with shock washer (Item 4) and shock spacer limiter (Item 5) into mounting hole in crossmember mounting plate (Item 2). Ensure that top shock tabs rest above holes in cab mounting plate (Item 1).
   b. Install shock washer (Item 4) and hex flanged lock nut (Item 27) onto bottom shaft of shock absorber (Item 9). Tighten to 10 to 15 Lbf-ft (14 to 20 N•m).
   c. Install two hex flanged head bolts (Item 21) thru shock absorber (Item 9) and cab mounting plate (Item 1) and install two hex flanged lock nuts (Item 24). Tighten to 45 Lbf-ft (61 N•m).

2. Install shock absorber (Item 8) as follows.
   a. Position shock absorber (Item 8) with bottom shock tabs below holes in crossmember mounting plate (Item 2). Ensure that top shock tabs rest above holes in cab mounting plate (Item 1).
   b. Install two hex flanged head bolts (Item 21) thru shock absorber (Item 8) and cab mounting plate (Item 1) at the top of shock absorber and install two hex flanged lock nuts (Item 24). Tighten to 45 Lbf-ft (61 N•m).
   c. Install two hex flanged head bolts (Item 22) thru crossmember mounting plate (item 2) and shock absorber (Item 8) at the bottom of shock absorber and install two hex flanged lock nuts (Item 24). Tighten to 45 Lbf-ft (61 N•m).

Install Cab Air Suspension Air Spring (Bag)

Refer to Figure 110 (See Figure 110, page 158) for Items in parentheses.

1. Position air spring (bag) (Item 7) in place between cab mounting plate (Item 1) and crossmember mounting plate (Item 2).

2. Install machine screw (Item 26) thru crossmember mounting plate (Item 2) into bottom of air spring (bag) (Item 7). Tighten to 40 to 50 Lbf-ft (54 to 68 N•m).

3. Install hex head bolt (Item 25) thru cab mounting plate (Item 1) into top of air spring (bag) (Item 7). Tighten to 40 to 50 Lbf-ft (54 to 68 N•m).

4. Install hex nipple fitting (Item 14) into top of air spring (bag) (Item 7). Refer to **TORQUE CHART** for proper tightening of air line fittings.

5. Install elbow fitting (Item 15) onto hex nipple fitting (Item 14) of air spring (bag) (Item 7). Refer to **TORQUE CHART** for proper tightening of air line fittings.

6. Push air line (to air spring) (Item 16) into compression nut of elbow fitting (Item 15) at top of air spring (bag) (Item 7). Refer to **TORQUE CHART** for proper tightening of air line fittings.

7. Build up air pressure and check for air spring operation. Also check for air leaks. Correct as necessary.

8. Check cab ride height between bottom of cab mounting plate and top of crossmember mounting plate. Cab air suspension ride height is 5 3/16 inches (131.8 mm) (Figure 172) (See Figure 172, page 329). If adjustment is required, refer to **ADJUSTMENTS, CAB AIR SUSPENSION SYSTEM FOR 9200*i* DAY CAB MODELS WITH DETROIT DIESEL ENGINES BEFORE JANUARY 1997** (See CAB AIR SUSPENSION SYSTEM FOR 9200*i* DAY CAB MODELS WITH DETROIT DIESEL ENGINES BEFORE JANUARY 1997, page 328).

Install Lateral Control Rod

Refer to Figure 110 (See Figure 110, page 158) for Items in parentheses.

1. Install lateral control rod (Item 6) as follows.
   a. Position lateral control rod (Item 6) with spacer limiter (Item 3) in mounting bracket of crossmember mounting plate (Item 2) and install hex head bolt (Item 29) from the front thru mounting bracket of crossmember mounting plate and lateral control rod and install hex lock nut (Item 30). Tighten to 40 to 45 Lbf-ft (54 to 61 N•m).
   b. Position lateral control rod (Item 6) with spacer limiter (Item 3) in mounting bracket of cab mounting plate (Item 1) and install hex head bolt (Item 29) from the front thru cab mounting plate and lateral control rod and install hex lock nut (Item 30). Tighten to 40 to 45 Lbf-ft (54 to 61 N•m).

5.41. CAB AIR SUSPENSION SYSTEM FOR 9100*i* AND 9200*i* DAY CAB MODELS AFTER JANUARY 1997

Refer to Figure 110 (See Figure 110, page 158) for Items in parentheses.

The cab air suspension system for the 9100*i* and 9200*i* day cab models after January 1997 contains one air spring (bag) (Item 7), two shock absorbers (Items 8 and 9), and is controlled by the height control valve (Item 10). The air suspension assembly (Figure 110) (See Figure 110, page 158) needs no lubrication and very little maintenance.

The following components - air line (to air spring) (Item 16), hex nipple fitting (Item 14), elbow fitting (Item 15), air spring (bag) (Item 7), height control valve (Item 10), shock absorbers (Items 8 and 9) and lateral control rod (Item 6) - should be checked at the time the truck is being serviced. Immediate corrective action should be taken if a malfunction occurs.

NOTE – The height control valve (Item 10), air spring (bag) (Item 7) and shock absorbers (Items 8 and 9) are serviceable and can be replaced individually.

Periodically check tightness of all fasteners and air line fitting connections. Refer to the **TORQUE CHART** for (Figure 110) (See Figure 110, page 158) for proper tightening of all fasteners and air line fitting connections.

Install Height Control Valve

NOTE – If there is an attempt to disassemble or adjust fittings on the height control valve (Item 10, Figure 110) (See Figure 110, page 158), it will void the warranty. Contact the air suspension manufacturer for assistance.

Refer to Figure 110 (See Figure 110, page 158) for Items in parentheses.

1. Position height control valve (Item 10) in place on mounting bracket of crossmember mounting plate (Item 2).

2. Install two hex head bolts (Item 18) thru height control valve and mounting bracket of crossmember mounting plate (Item 2) and install two hex lock nuts (Item 19). Tighten to 10 Lbf-ft (14 N•m).

Refer to Figure 111 (See Figure 111, page 160) for Items in parentheses.

3. Install height control valve linkage (Item 4) onto threaded ball pivot of height control valve arm (Item 5) by positioning the height control valve linkage socket over threaded ball pivot and pushing linkage socket onto threaded ball pivot until it snaps in place, latch the linkage clip.

4. Push push to connect connector (Item 7) and air line (supply) (Item 1) into elbow fitting in “SUPPLY” port of height control valve (Item 3). Refer to **TORQUE CHART** for proper tightening of air line fittings.

5. Push air line (to air spring) (Item 2) into compression nut (Item 8) of elbow fitting in “SUSP” port of height control valve (Item 3). Refer to **TORQUE CHART** for proper tightening of air line fittings.

6. Build up air pressure and check for air leaks.

7. Check cab ride height between bottom of cab mounting plate and top of crossmember mounting plate. Cab air suspension ride height is 5 3/16 inches (131.8 mm) (Figure 172) (See Figure 172, page 329). If adjustment is required, refer to **ADJUSTMENTS, CAB AIR SUSPENSION SYSTEM FOR 9100*i*AND 9200*i* DAY CAB MODELS AFTER JANUARY 1997** (See CAB AIR SUSPENSION SYSTEM FOR 9100*i* AND 9200*i* DAY CAB MODELS AFTER JANUARY 1997, page 330).

Install Cab Air Suspension Shock Absorber

Refer to Figure 110 (See Figure 110, page 158) for Items in parentheses.

1. Install shock absorber (Item 9) as follows.
   a. Position bottom shaft of shock absorber (Item 9) with shock washer (Item 4) and shock spacer limiter (Item 5) into mounting hole in crossmember mounting plate (Item 2). Ensure that top shock tabs rest above holes in cab mounting plate (Item 1).
   b. Install shock washer (Item 4) and hex flanged lock nut (Item 27) onto bottom shaft of shock absorber (Item 9). Tighten to 10 to 15 Lbf-ft (14 to 20 N•m).
   c. Install two hex flanged head bolts (Item 21) thru shock absorber (Item 9) and cab mounting plate (Item 1) and install two hex flanged lock nuts (Item 24). Tighten to 45 Lbf-ft (61 N•m).

2. Install shock absorber (Item 8) as follows.

a. Position shock absorber (Item 8) with bottom shock tabs below holes in crossmember mounting plate (Item 2). Ensure that top shock tabs rest above holes in cab mounting plate (Item 1).

b. Install two hex flanged head bolts (Item 21) thru shock absorber (Item 8) and cab mounting plate (Item 1) at the top of shock absorber and install two hex flanged lock nuts (Item 24). Tighten to 45 Lbf-ft (61 N•m).

c. Install two hex flanged head bolts (Item 22) thru crossmember mounting plate (item 2) and shock absorber (Item 8) at the bottom of shock absorber and install two hex flanged lock nuts (Item 24). Tighten to 45 Lbf-ft (61 N•m).

Install Cab Air Suspension Air Spring (Bag)

Refer to Figure 110 (See Figure 110, page 158) for Items in parentheses.

1. Position air spring (bag) (Item 7) in place between cab mounting plate (Item 1) and crossmember mounting plate (Item 2).

2. Install machine screw (Item 26) thru crossmember mounting plate (Item 2) into bottom of air spring (bag) (Item 7). Tighten to 40 to 50 Lbf-ft (54 to 68 N•m).

3. Install hex head bolt (Item 25) thru cab mounting plate (Item 1) into top of air spring (bag) (Item 7). Tighten to 40 to 50 Lbf-ft (54 to 68 N•m).

4. Install hex nipple fitting (Item 14) into top of air spring (bag) (Item 7). Refer to **TORQUE CHART** for proper tightening of air line fittings.

5. Install elbow fitting (Item 15) onto hex nipple fitting (Item 14) of air spring (bag) (Item 7). Refer to **TORQUE CHART** for proper tightening of air line fittings.

6. Push air line (to air spring) (Item 16) into compression nut of elbow fitting (Item 15) at top of air spring (bag) (Item 7). Refer to **TORQUE CHART** for proper tightening of air line fittings.

7. Build up air pressure and check for air spring operation. Also check for air leaks. Correct as necessary.

8. Check cab ride height between bottom of cab mounting plate and top of crossmember mounting plate. Cab air suspension ride height is 5 3/16 inches (131.8 mm) (Figure 172) (See Figure 172, page 329). If adjustment is required, refer to **ADJUSTMENTS, CAB AIR SUSPENSION SYSTEM FOR 9100*i*AND 9200*i* DAY CAB MODELS AFTER JANUARY 1997** (See CAB AIR SUSPENSION SYSTEM FOR 9100*i* AND 9200*i* DAY CAB MODELS AFTER JANUARY 1997, page 330).

Install Lateral Control Rod

Refer to Figure 110 (See Figure 110, page 158) for Items in parentheses.

1. Install lateral control rod (Item 6) as follows.

   a. Position lateral control rod (Item 6) with spacer limiter (Item 3) in mounting bracket of crossmember mounting plate (Item 2) and install hex head bolt (Item 29) from the front thru mounting bracket of crossmember mounting plate and lateral control rod and install hex lock nut (Item 30). Tighten to 40 to 45 Lbf-ft (54 to 61 N•m).

   b. Position lateral control rod (Item 6) with spacer limiter (Item 3) in mounting bracket of cab mounting plate (Item 1) and install hex head bolt (Item 29) from the front thru cab mounting plate and lateral control rod and install hex lock nut (Item 30). Tighten to 40 to 45 Lbf-ft (54 to 61 N•m).

5.42. CAB AIR SUSPENSION SYSTEM FOR 9200*i* DAY CAB MODELS WITH DETROIT DIESEL ENGINES BEFORE MARCH 1997

Refer to Figure 112 (See Figure 112, page 165) for Items in parentheses.

The cab air suspension system for the 9200*i* day cab models with Detroit Diesel engines before March 1997 contains one air spring (bag) (Item 4), two shock absorbers (Items 5 and 6), and is controlled by the height control valve (Item 7). The air suspension assembly (Figure 112) (See Figure 112, page 165) needs no lubrication and very little maintenance.

The following components - air line (to air spring) (Item 13), hex nipple fitting (Item 11), elbow fitting (Item 12), air spring (bag) (Item 4), height control valve (Item 7), shock absorbers (Items 5 and 6) and lateral control rod (Item 3) - should be checked at the time the truck is being serviced. Immediate corrective action should be taken if a malfunction occurs.

NOTE – The height control valve (Item 7), air spring (bag) (Item 4) and shock absorbers (Items 5 and 6) are serviceable and can be replaced individually.

Periodically check tightness of all fasteners and air line fitting connections. Refer to the **TORQUE CHART** for (Figure 112) (See Figure 112, page 165) for proper tightening of all fasteners and air line fitting connections.

Install Height Control Valve

NOTE – If there is an attempt to disassemble or adjust fittings on the height control valve (Item 7, Figure 112) (See Figure 112, page 165), it will void the warranty. Contact the air suspension manufacturer for assistance.

Refer to Figure 113 (See Figure 113, page 167) for Items in parentheses.

1. Inspect height control valve (Item 3) to insure drive bearing notch (Item 14) is located on “SUPS” port side of valve. If not, loosen pan head bearing screw (Item 13), but not remove, and pull height control valve arm (Item 7) loose from drive bearing (Item 15). Rotate drive bearing until drive bearing notch is in correct position, then secure height control valve arm by tightening pan head bearing screw. Tighten to 40 to 50 Lbf-in (4.5 to 5.6 N•m).

2. Position height control valve (Item 3) in place on mounting bracket of crossmember mounting plate (Item 10).

3. Install two carriage bolts (Item 8) thru mounting bracket of crossmember mounting plate (Item 10) and height control valve (Item 3) and install two hex lock nuts (Item 9). Tighten to 8 to 10 Lbf-ft (11 to 14 N•m).

4. Install height control valve linkage (Item 5) onto threaded ball pivot (Item 6) of height control valve arm (Item 7) by positioning the height control valve linkage socket over threaded ball pivot and pushing linkage socket onto threaded ball pivot until it snaps in place, latch the linkage clip.

5. Push push to connect elbow fitting (Item 1) into “SUPPLY” port of height control valve (Item 3). Refer to **TORQUE CHART** for proper tightening of air line fittings.

6. Push air line (supply) (Item 2) into push to connect elbow fitting (Item 1) in “SUPPLY” port of height control valve (Item 3). Refer to **TORQUE CHART** for proper tightening of air line fittings.

7. Push air line (to air spring) (Item 4) into “SUSP” port of height control valve (Item 3). Refer to **TORQUE CHART** for proper tightening of air line fittings.

8. Build up air pressure and check for air leaks.

9. Check cab ride height between bottom of cab mounting plate and top of crossmember mounting plate . Cab air suspension ride height is 5 3/16 inches (131.8 mm) (Figure 174) (See Figure 174, page 331). If adjustment is required, refer to **ADJUSTMENTS, CAB AIR SUSPENSION SYSTEM FOR 9200*i* DAY CAB MODELS WITH DETROIT DIESEL ENGINES BEFORE MARCH 1997** (See CAB AIR SUSPENSION SYSTEM FOR 9200*i* DAY CAB MODELS WITH DETROIT DIESEL ENGINES BEFORE MARCH 1997, page 331).

Install Cab Air Suspension Shock Absorber

Refer to Figure 112 (See Figure 112, page 165) for Items in parentheses.

1. Install shock absorber (Item 5) as follows.
   a. Position bottom of shock absorber (Item 5) into mounting bracket of crossmember mounting plate (Item 2).
   b. Install hex head bolt (Item 18) from outboard side thru crossmember mounting plate (Item 2) and shock absorber (Item 5) and install hex lock nut (Item 19). Tighten to 45 Lbf-ft (61 N•m).
   c. Position top of shock absorber (Item 5) into mounting bracket of cab mounting plate (Item 1).
   d. Install hex head bolt (Item 18) from outboard side thru cab mounting plate (Item 1) and shock absorber (Item 5) and install hex lock nut (Item 19). Tighten to 45 Lbf-ft (61 N•m).

2. Install shock absorber (Item 6) as follows.
   a. Position bottom of shock absorber (Item 6) into mounting bracket of crossmember mounting plate (Item 2).
   b. Install hex head bolt (Item 18) from outboard side thru crossmember mounting plate (Item 2) and shock absorber (Item 6) and install hex lock nut (Item 19). Tighten to 45 Lbf-ft (61 N•m).
   c. Position top of shock absorber (Item 6) into mounting bracket of cab mounting plate (Item 1).
   d. Install hex head bolt (Item 18) from outboard side thru cab mounting plate (Item 1) and shock absorber (Item 6) and install hex lock nut (Item 19). Tighten to 45 Lbf-ft (61 N•m).

Install Cab Air Suspension Air Spring (Bag)

Refer to Figure 112 (See Figure 112, page 165) for Items in parentheses.

1. Position air spring (bag) (Item 4) in place between cab mounting plate (Item 1) and crossmember mounting plate (Item 2).

2. Install machine screw (Item 20) thru crossmember mounting plate (Item 2) into bottom of air spring (bag) (Item 4). Tighten to 40 to 50 Lbf-ft (54 to 68 N•m).

3. Install hex head bolt (Item 21) with lock washer (Item 22) thru cab mounting plate (Item 1) into top of air spring (bag) (Item 4). Tighten to 40 to 50 Lbf-ft (54 to 68 N•m).

4. Install hex nipple fitting (Item 11) into top of air spring (bag) (Item 4). Refer to **TORQUE CHART** for proper tightening of air line fittings.

5. Install elbow fitting (Item 12) onto hex nipple fitting (Item 11) at top of air spring (bag) (Item 4). Refer to **TORQUE CHART** for proper tightening of air line fittings.

6. Push air line (to air spring) (Item 13) into compression nut of elbow fitting (Item 12) at top of air spring (bag) (Item 4). Refer to **TORQUE CHART** for proper tightening of air line fittings.

7. Build up air pressure and check for air spring operation. Also check for air leaks. Correct as necessary.

8. Check cab ride height between bottom of cab mounting plate and top of crossmember mounting plate . Cab air suspension ride height is 5 3/16 inches (131.8 mm) (Figure 174) (See Figure 174, page 331). If adjustment is required, refer to **ADJUSTMENTS, CAB AIR SUSPENSION SYSTEM FOR 9200*i* DAY CAB MODELS WITH DETROIT DIESEL ENGINES BEFORE MARCH 1997** (See CAB AIR SUSPENSION SYSTEM FOR 9200*i* DAY CAB MODELS WITH DETROIT DIESEL ENGINES BEFORE MARCH 1997, page 331).

Install Lateral Control Rod

Refer to Figure 112 (See Figure 112, page 165) for Items in parentheses.

1. Install lateral control rod (Item 3) as follows.
   a. Position lateral control rod (Item 3) in mounting bracket of crossmember mounting plate (Item 2) and install hex head bolt (Item 23) from the back thru mounting bracket of crossmember mounting plate and lateral control rod (Item 3) and install hex lock nut (Item 24). Tighten to 40 to 45 Lbf-ft (54 to 61 N•m).
   b. Position lateral control rod (Item 3) in mounting bracket of cab mounting plate (Item 1) and install hex head bolt (Item 23) from the back thru mounting bracket of cab mounting plate and lateral control rod and install hex lock nut (Item 24). Tighten to 40 to 45 Lbf-ft (54 to 61 N•m).

5.43. CAB AIR SUSPENSION SYSTEM FOR 9100*I* AND 9200*I*DAY CAB MODELS AFTER MARCH 1997

Refer to Figure 112 (See Figure 112, page 165) for Items in parentheses.

The cab air suspension system for the 9100*i* and 9200*i* day cab models after March 1997 contains one air spring (bag) (Item 4), two shock absorbers (Items 5 and 6), and is controlled by the height control valve (Item 7). The air suspension assembly (Figure 112) (See Figure 112, page 165) needs no lubrication and very little maintenance.

The following components - air line (to air spring) (Item 13), hex nipple fitting (Item 11), elbow fitting (Item 12), air spring (bag) (Item 4), height control valve (Item 7), shock absorbers (Items 5 and 6) and lateral control rod (Item 3) - should be checked at the time the truck is being serviced. Immediate corrective action should be taken if a malfunction occurs.

NOTE – The height control valve (Item 7), air spring (bag) (Item 4) and shock absorbers (Items 5 and 6) are serviceable and can be replaced individually.

Periodically check tightness of all fasteners and air line fitting connections. Refer to the **TORQUE CHART** for (Figure 112) (See Figure 112, page 165) for proper tightening of all fasteners and air line fitting connections.

Install Height Control Valve

NOTE – If there is an attempt to disassemble or adjust fittings on the height control valve (Item 7, Figure 112) (See Figure 112, page 165), it will void the warranty. Contact the air suspension manufacturer for assistance.

Refer to Figure 113 (See Figure 113, page 167) for Items in parentheses.

1. Inspect height control valve (Item 3) to insure drive bearing notch (Item 14) is located on “SUPS” port side of valve. If not, loosen pan head bearing screw (Item 13), but not remove, and pull height control valve arm (Item 7) loose from drive bearing (Item 15). Rotate drive bearing until drive bearing notch is in correct position, then secure height control valve arm by tightening pan head bearing screw. Tighten to 40 to 50 Lbf-in (4.5 to 5.6 N•m).

2. Position height control valve (Item 3) in place on mounting bracket of crossmember mounting plate (Item 10).

3. Install two carriage bolts (Item 8) thru mounting bracket of crossmember mounting plate (Item 10) and height control valve (Item 3) and install two hex lock nuts (Item 9). Tighten to 8 to 10 Lbf-ft (11 to 14 N•m).

4. Install height control valve linkage (Item 5) onto threaded ball pivot (Item 6) of height control valve arm (Item 7) by positioning the height control valve linkage socket over threaded ball pivot and pushing linkage socket onto threaded ball pivot until it snaps in place, latch the linkage clip.

5. Push push to connect elbow fitting (Item 1) into “SUPPLY” port of height control valve (Item 3). Refer to **TORQUE CHART** for proper tightening of air line fittings.

6. Push air line (supply) (Item 2) into push to connect elbow fitting (Item 1) in “SUPPLY” port of height control valve (Item 3). Refer to **TORQUE CHART** for proper tightening of air line fittings.

7. Push air line (to air spring) (Item 4) into “SUSP” port of height control valve (Item 3). Refer to **TORQUE CHART** for proper tightening of air line fittings.

8. Build up air pressure and check for air leaks.

9. Check cab ride height between bottom of cab mounting plate and top of crossmember mounting plate. Cab air suspension ride height is 5 3/16 inches (131.8 mm) (Figure 174) (See Figure 174, page 331). If adjustment is required, refer to **ADJUSTMENTS, CAB AIR SUSPENSION SYSTEM FOR 9100*i* AND 9200*i* DAY CAB MODELS AFTER MARCH 1997** (See CAB AIR SUSPENSION SYSTEM FOR 9100*i* and 9200*i* DAY CAB MODELS AFTER MARCH 1997, page 334).

Install Cab Air Suspension Shock Absorber

Refer to Figure 112 (See Figure 112, page 165) for Items in parentheses.

1. Install shock absorber (Item 5) as follows.
   a. Position bottom of shock absorber (Item 5) into mounting bracket of crossmember mounting plate (Item 2).
   b. Install hex head bolt (Item 18) from outboard side thru crossmember mounting plate (Item 2) and shock absorber (Item 5) and install hex lock nut (Item 19). Tighten to 45 Lbf-ft (61 N•m).
   c. Position top of shock absorber (Item 5) into mounting bracket of cab mounting plate (Item 1).
   d. Install hex head bolt (Item 18) from outboard side thru cab mounting plate (Item 1) and shock absorber (Item 5) and install hex lock nut (Item 19). Tighten to 45 Lbf-ft (61 N•m).

2. Install shock absorber (Item 6) as follows.
   a. Position bottom of shock absorber (Item 6) into mounting bracket of crossmember mounting plate (Item 2).

b. Install hex head bolt (Item 18) from outboard side thru crossmember mounting plate (Item 2) and shock absorber (Item 6) and install hex lock nut (Item 19). Tighten to 45 Lbf-ft (61 N•m).

c. Position top of shock absorber (Item 6) into mounting bracket of cab mounting plate (Item 1).

d. Install hex head bolt (Item 18) from outboard side thru cab mounting plate (Item 1) and shock absorber (Item 6) and install hex lock nut (Item 19). Tighten to 45 Lbf-ft (61 N•m).

Install Cab Air Suspension Air Spring (Bag)

Refer to Figure 112 (See Figure 112, page 165) for Items in parentheses.

1. Position air spring (bag) (Item 4) in place between cab mounting plate (Item 1) and crossmember mounting plate (Item 2).

2. Install machine screw (Item 20) thru crossmember mounting plate (Item 2) into bottom of air spring (bag) (Item 4). Tighten to 40 to 50 Lbf-ft (54 to 68 N•m).

3. Install hex head bolt (Item 21) with lock washer (Item 22) thru cab mounting plate (Item 1) into top of air spring (bag) (Item 4). Tighten to 40 to 50 Lbf-ft (54 to 68 N•m).

4. Install hex nipple fitting (Item 11) into top of air spring (bag) (Item 4). Refer to **TORQUE CHART** for proper tightening of air line fittings.

5. Install elbow fitting (Item 12) onto hex nipple fitting (Item 11) at top of air spring (bag) (Item 4). Refer to **TORQUE CHART** for proper tightening of air line fittings.

6. Push air line (to air spring) (Item 13) into compression nut of elbow fitting (Item 12) at top of air spring (bag) (Item 4). Refer to **TORQUE CHART** for proper tightening of air line fittings.

7. Build up air pressure and check for air spring operation. Also check for air leaks. Correct as necessary.

8. Check cab ride height between bottom of cab mounting plate and top of crossmember mounting plate. Cab air suspension ride height is 5 3/16 inches (131.8 mm) (Figure 174) (See Figure 174, page 331). If adjustment is required, refer to **ADJUSTMENTS, CAB AIR SUSPENSION SYSTEM FOR 9100*i* AND 9200*i* DAY CAB MODELS AFTER MARCH 1997** (See CAB AIR SUSPENSION SYSTEM FOR 9100*i* and 9200*i* DAY CAB MODELS AFTER MARCH 1997, page 334).

Install Lateral Control Rod

Refer to Figure 112 (See Figure 112, page 165) for Items in parentheses.

1. Install lateral control rod (Item 3) as follows.

   a. Position lateral control rod (Item 3) in mounting bracket of crossmember mounting plate (Item 2) and install hex head bolt (Item 23) from the back thru mounting bracket of crossmember mounting plate and lateral control rod (Item 3) and install hex lock nut (Item 24). Tighten to 40 to 45 Lbf-ft (54 to 61 N•m).

   b. Position lateral control rod (Item 3) in mounting bracket of cab mounting plate (Item 1) and install hex head bolt (Item 23) from the back thru mounting bracket of cab mounting plate and lateral control rod and install hex lock nut (Item 24). Tighten to 40 to 45 Lbf-ft (54 to 61 N•m).

5.44. CAB AIR SUSPENSION SYSTEM FOR 9200*i*/9400*i*/9900*i* MODELS WITH PRO-SLEEPER® BEFORE APRIL 2000

Refer to Figure 114 (See Figure 114, page 172) for Items in parentheses.

The cab air suspension system for the 9200*i*, 9400*i* and 9900*i* models with Pro-Sleeper® before April 2000 contains two air springs (bags) (Item 14), two shock absorbers (Item 8), and is controlled by the height control valve (Item 1). The air suspension assembly (Figure 114) (See Figure 114, page 172) needs no lubrication and very little maintenance.

The following components - air lines (to air spring) (Items 21 and 23), elbow fittings (Item 25), air springs (bags) (Item 14), height control valve (Item 1), shock absorbers (Item 8) and lateral control arm (Item 26) - should be checked at the time the truck is being serviced. Immediate corrective action should be taken if a malfunction occurs.

NOTE – The height control valve (Item 1), air springs (bags) (Item 14) and shock absorbers (Item 8) are serviceable and can be replaced individually.

Periodically check tightness of all fasteners and air line fitting connections. Refer to the **TORQUE CHART** for (Figure 114) (See Figure 114, page 172) for proper tightening of all fasteners and air line fitting connections.

Install Height Control Valve

NOTE – If there is an attempt to disassemble or adjust fittings on the height control valve (Item 1, Figure 114) (See Figure 114, page 172), it will void the warranty. Contact the air suspension manufacturer for assistance.

Refer to Figure 115 (See Figure 115, page 174) for Items in parentheses.

1. Inspect height control valve (Item 3) to insure drive bearing notch (Item 7) is located on “SUPS” port side of valve. If not, loosen pan head bearing screw (Item 8), but not remove, and pull height control valve lever (Item 9) loose from drive bearing (Item 10) and rotate drive bearing until drive bearing notch is in correct position, then secure height control valve lever by tightening pan head bearing screw. Tighten to 40 to 50 Lbf-in (4.5 to 5.6 N•m).

Refer to Figure 114 (See Figure 114, page 172) for Items in parentheses unless otherwise noted.

2. Position height control valve (Item 1) on cab mounting plate (Item 18).

3. Install two hex head bolts (Item 3) thru height control valve and cab mounting plate (Item 18) and install hex lock nuts (Item 4). Tighten to 8 to 10 Lbf-ft (11 to 14 N•m).

Refer to Figure 115 (See Figure 115, page 174) for Items in parentheses.

4. Push “Y” push-in connector (Item 2) into “SUPS” port side of height control valve (Item 3). Refer to **TORQUE CHART** for proper tightening of air line fittings.

5. Push both air lines (to air springs) (Item 1) into “Y” push-in connector (Item 2) in “SUPS” port side of height control valve (Item 3). Refer to **TORQUE CHART** for proper tightening of air line fittings.

6. Push push to connect elbow fitting (Item 5) into “SUPPLY” port of height control valve (Item 3). Refer to **TORQUE CHART** for proper tightening of air line fittings.

7. Push air line (supply) (Item 4) into push to connect elbow fitting (Item 5) in “SUPPLY” port of height control valve (Item 3). Refer to **TORQUE CHART** for proper tightening of air line fittings.

8. Install height control valve linkage (Item 6) onto threaded ball pivot of height control valve lever (Item 9) by positioning the height control valve linkage socket over threaded ball pivot and pushing linkage socket onto threaded ball pivot until it snaps in place, latch the linkage clip.

9. Build up air pressure and check for air leaks.

10. Check cab ride height between bottom of cab mounting plate and top of crossmember mounting plate. Cab air suspension ride height is fixed and should be 6 1/2 inches (165.1 mm) (Figure 176) (See Figure 176, page 335). Refer to **ADJUSTMENTS, CAB AIR SUSPENSION SYSTEM FOR 9200*i*/9400*i*/9900*i* MODELS WITH PRO-SLEEPER® BEFORE APRIL 2000** (See CAB AIR SUSPENSION SYSTEM FOR 9200*i*/9400*i*/9900*i* MODELS WITH PRO-SLEEPER® BEFORE APRIL 2000, page 334).

Install Cab Air Suspension Shock Absorber

Refer to Figure 114 (See Figure 114, page 172) for Items in parentheses.

1. Position shock absorbers (Item 8) in place between cab mounting plate (Item 18) and crossmember mounting plate (Item 11).

2. Install hex head bolts and hex lock nuts (Items 9 and 10) at the top and bottom of shock absorbers (Item 8). Tighten to 40 to 50 Lbf-ft (54 to 68 N•m).

Install Cab Air Suspension Air Spring (Bag)

Refer to Figure 114 (See Figure 114, page 172) for Items in parentheses unless otherwise noted.

1. Place air springs (bags) (Item 14) in position between cab mounting plate (Item 18) and crossmember mounting plate (Item 11).

2. Thread each of the air springs (bags) (Item 14) on threaded studs (Item 27), screw each air spring (bag) down until bottom is tight against crossmember mounting plate (Item 11).

3. Release jack placed between frame rail flange and back of cab floor frame (Figure 106) (See Figure 106, page 148), lower cab, making sure top mounting studs of both air springs (bags) (Item 14) are positioned into mounting holes of cab mounting plate (Item 18).

4. Install retaining rings (Item 19) at the top of each of the air springs (bags) (Item 14) and securely press onto top stud of air springs (bags). Refer to **TORQUE CHART** for proper tightening of retaining rings.

5. Push push to connect elbow fitting (Item 25) into top of driver side air spring (bag) (Item 14). Refer to **TORQUE CHART** for proper tightening of air line fittings.

6. Push air line (to air spring) (Item 21) into push to connect elbow fitting (Item 25) at the top of driver side air spring (bag) (Item 14). Refer to **TORQUE CHART** for proper tightening of air line fittings.

7. Push push to connect elbow fitting (Item 25) into top of passenger side air spring (bag) (Item 14). Refer to **TORQUE CHART** for proper tightening of air line fittings.

8. Push air line (to air spring) (Item 23) into push to connect elbow fitting (Item 25) at the top of passenger side air spring (bag) (Item 14). Refer to **TORQUE CHART** for proper tightening of air line fittings.

9. Build up air pressure and check for air spring operation. Also check for air leaks. Correct as necessary.

10. Check cab ride height between bottom of cab mounting plate and top of crossmember mounting plate . Cab air suspension ride height is fixed and should be 6 1/2 inches (165.1 mm) (Figure 176) (See Figure 176, page 335). Refer to **ADJUSTMENTS, CAB AIR SUSPENSION SYSTEM FOR 9200*i*/9400*i*/9900*i* MODELS WITH PRO-SLEEPER® BEFORE APRIL 2000** (See CAB AIR SUSPENSION SYSTEM FOR 9200*i*/9400*i*/9900*i* MODELS WITH PRO-SLEEPER® BEFORE APRIL 2000, page 334).

Install Lateral Control Rod

Refer to Figure 114 (See Figure 114, page 172) for Items in parentheses.

1. Install lateral control rod (Item 26) as follows.
   a. Position lateral control rod (Item 26) in mounting bracket of crossmember mounting plate (Item 11) and install hex head bolt (Item 12) from the back thru mounting bracket of crossmember mounting plate and lateral control rod (Item 3) and install hex lock nut (Item 13). Tighten to 40 to 45 Lbf-ft (54 to 61 N•m).
   b. Position lateral control rod (Item 26) in mounting bracket of cab mounting plate (Item 18) and install hex head bolt (Item 12) from the back thru mounting bracket of cab mounting plate and lateral control rod and install hex lock nut (Item 13). Tighten to 40 to 45 Lbf-ft (54 to 61 N•m).

5.45. CAB AIR SUSPENSION SYSTEM FOR 9200*I*/9400*I*/9900*I* MODELS WITH PRO-SLEEPER® AFTER APRIL 2000

Refer to Figure 116 (See Figure 116, page 177) for Items in parentheses.

The cab air suspension system for the 9200*i*, 9400*i* and 9900*i* models with Pro-Sleeper® after April 2000 contains two air springs (bags) (Item 14), two shock absorbers (Item 8), and is controlled by the height control valve (Item 1). The air suspension assembly (Figure 116) (See Figure 116, page 177) needs no lubrication and very little maintenance.

The following components - air lines (to air spring) (Item 20), two elbow fittings (Item 21), tee fitting (Item 22), air springs (Item 14), height control valve (Item 1), shock absorbers (Item 8) and lateral control arm (Item 26) - should be checked at the time the truck is being serviced. Immediate corrective action should be taken if a malfunction occurs.

NOTE – The height control valve (Item 1), air springs (bags) (Item 14) and shock absorbers (Item 8) are serviceable and can be replaced individually.

Periodically check tightness of all fasteners and air line fitting connections. Refer to the **TORQUE CHART** for (Figure 116) (See Figure 116, page 177) for proper tightening of all fasteners and air line fitting connections.

Install Height Control Valve

NOTE – If there is an attempt to disassemble or adjust fittings on the height control valve (Item 1, Figure 116) (See Figure 116, page 177), it will void the warranty. Contact the air suspension manufacturer for assistance.

Refer to Figure 117 (See Figure 117, page 179) for Items in parentheses.

1. Inspect height control valve (Item 2) to insure drive bearing notch (Item 6) is located on “SUSP” port side of valve. If not, loosen pan head bearing screw (Item 7), but not remove, and pull height control valve lever (Item 5) loose from drive bearing (Item 8) and rotate drive bearing until drive bearing notch is in correct position, then secure height control valve lever by tightening pan head bearing screw. Tighten to 40 to 50 Lbf-in (4.5 to 5.6 N•m).

Refer to Figure 116 (See Figure 116, page 177) for Items in parentheses.

2. Position height control valve (Item 1) on cab mounting plate (Item 18).

3. Install two hex head bolts (Item 3) thru height control valve and cab mounting plate (Item 18) and install hex lock nuts (Item 4). Tighten to 8 to 10 Lbf-ft (11 to 14 N•m).

Refer to Figure 117 (See Figure 117, page 179) for Items in parentheses.

4. Push air line (to air springs) (Item 1) into “SUSP” port of height control valve (Item 2). Refer to **TORQUE CHART** for proper tightening of air line fittings.

5. Push air line (supply) (Item 3) into “SUPPLY” port of height control valve (Item 2). Refer to **TORQUE CHART** for proper tightening of air line fittings.

6. Install height control valve linkage (Item 4) onto threaded ball pivot of height control valve lever (Item 5) by positioning the height control valve linkage socket over threaded ball pivot and pushing linkage socket onto threaded ball pivot until it snaps in place, latch the linkage clip.

7. Build up air pressure and check for air leaks.

8. Check cab ride height between bottom of cab mounting plate and top of crossmember mounting plate. Cab air suspension ride height is fixed and should be 6 1/2 inches (165.1 mm) (Figure 178) (See Figure 178, page 337). Refer to **ADJUSTMENTS, CAB AIR SUSPENSION SYSTEM FOR 9200*i*/9400*i*/9900*i* MODELS WITH PRO-SLEEPER® AFTER APRIL 2000** (See CAB AIR SUSPENSION SYSTEM FOR 9200*i*/9400*i*/9900*i* MODELS WITH PRO-SLEEPER® AFTER APRIL 2000, page 337).

Install Cab Air Suspension Shock Absorber

Refer to Figure 116 (See Figure 116, page 177) for Items in parentheses.

1. Position shock absorbers (Item 8) in place between cab mounting plate (Item 18) and crossmember mounting plate (Item 11).

2. Install hex head bolts and hex lock nuts (Items 9 and 10) at the top and bottom of shock absorbers (Item 8). Tighten to 40 to 50 Lbf-ft (54 to 68 N•m).

Install Cab Air Suspension Air Spring (Bag)

Refer to Figure 116 (See Figure 116, page 177) for Items in parentheses unless otherwise noted.

1. Place air springs (bags) (Item 14) in position between cab mounting plate (Item 18) and crossmember mounting plate (Item 11).

2. Thread each of the air springs (bags) (Item 14) on threaded studs (Item 27), screw each air spring (bag) down until bottom is tight against crossmember mounting plate (Item 11).

3. Release jack placed between frame rail flange and back of cab floor frame (Figure 106) (See Figure 106, page 148), lower cab, making sure top mounting studs of both air springs (bags) (Item 14) are positioned into mounting holes of cab mounting plate (Item 18).

4. Install retaining rings (Item 19) at the top of each of the air springs (bags) (Item 14) and securely press onto top stud of air springs (bags). Refer to **TORQUE CHART** for proper tightening of retaining ring.

5. Push push to connect elbow fitting (Item 21) into top of passenger side air spring (bag) (Item 14). Refer to **TORQUE CHART** for proper tightening of air line fittings.

6. Push push to connect elbow fitting (Item 21) into top of driver side air spring (bag) (Item 14). Refer to **TORQUE CHART** for proper tightening of air line fittings.

7. Push push to connect tee branch fitting (Item 22) into push to connect elbow fitting (Item 21) at top of driver side air spring (bag) (Item 14). Refer to **TORQUE CHART** for proper tightening of air line fittings.

8. Push air line (to air spring) (Item 20) into push to connect elbow fitting (Item 21) at the top of passenger side air spring (bag) (Item 14). Refer to **TORQUE CHART** for proper tightening of air line fittings.

9. Push other end of air line (to air spring) (Item 20) into push to connect tee branch fitting (Item 22) in push to connect elbow fitting (Item 21) at the top of driver side air spring (bag) (Item 14). Refer to **TORQUE CHART** for proper tightening of air line fittings.

10. Push air line (to air spring) (Item 20) into other side of push to connect tee branch fitting (Item 22) in push to connect elbow fitting (Item 21) at the top of driver side air spring (bag) (Item 14). Refer to **TORQUE CHART** for proper tightening of air line fittings.

11. Build up air pressure and check for air spring operation. Also check for air leaks. Correct as necessary.

12. Check cab ride height between bottom of cab mounting plate and top of crossmember mounting plate . Cab air suspension ride height is fixed and should be 6 1/2 inches (165.1 mm) (Figure 178) (See Figure 178, page 337). Refer to **ADJUSTMENTS, CAB AIR SUSPENSION SYSTEM FOR 9200*i*/9400*i*/9900*i* MODELS WITH PRO-SLEEPER® AFTER APRIL 2000** (See CAB AIR SUSPENSION SYSTEM FOR 9200*i*/9400*i*/9900*i* MODELS WITH PRO-SLEEPER® AFTER APRIL 2000, page 337).

Install Lateral Control Rod

Refer to Figure 116 (See Figure 116, page 177) for Items in parentheses.

1. Install lateral control rod (Item 26) as follows.
   a. Position lateral control rod (Item 26) in mounting bracket of crossmember mounting plate (Item 11) and install hex head bolt (Item 12) from the back thru mounting bracket of crossmember mounting plate and lateral control rod (Item 3) and install hex lock nut (Item 13). Tighten to 40 to 45 Lbf-ft (54 to 61 N•m).
   b. Position lateral control rod (Item 26) in mounting bracket of cab mounting plate (Item 18) and install hex head bolt (Item 12) from the back thru mounting bracket of cab mounting plate and lateral control rod and install hex lock nut (Item 13). Tighten to 40 to 45 Lbf-ft (54 to 61 N•m).

5.46. CAB AIR SUSPENSION SYSTEM FOR 5000*i* SERIES BEFORE SEPTEMBER 1997

Refer to Figure 118 (See Figure 118, page 182) for Items in parentheses.

The cab air suspension system for the 5000*i* Series before September 1997 contains two air springs (bags) (Item 1), two shock absorbers (Item 2), and is controlled by the height control valve (Item 3). The air suspension assembly (Figure 118) (See Figure 118, page 182) needs no lubrication and very little maintenance.

The following components - air lines (to air spring) (Item 5), elbow fittings (Item 4), air springs (bags) (Item 1), height control valve (Item 3), shock absorbers (Item 2) and lateral control arm (Item 23) - should be checked at the time the vehicle is being serviced. Immediate corrective action should be taken if a malfunction occurs.

NOTE – The height control valve (Item 3), air springs (bags) (Item 1) and shock absorbers (Item 2) are serviceable and can be replaced individually.

Periodically check tightness of all fasteners and air line fitting connections. Refer to the **TORQUE CHART** for (Figure 118) (See Figure 118, page 182) for proper tightening of all fasteners and air line fitting connections.

WARNING – To avoid personal injury, whenever any component is serviced or installed onto the air system, be sure to set parking brake and/or block vehicle wheels to prevent it from moving while service is being performed.

Install Height Control Valve

NOTE – If there is an attempt to disassemble or adjust fittings on the height control valve (Item 3, Figure 118) (See Figure 118, page 182), it will void the warranty. Contact the air suspension manufacturer for assistance.

Refer to Figure 118 (See Figure 118, page 182) for Items in parentheses.

1. Position height control valve (Item 3) in place on suspension crossmember bracket (Item 21) and install two hex head bolts (Item 6) thru height control valve and suspension crossmember bracket and install hex lock nuts (Item 7). Tighten to 8 to 10 Lbf-ft (11 to 14 N•m).

Refer to Figure 119 (See Figure 119, page 184) for Items in parentheses.

2. Install height control valve linkage (Item 5) onto threaded ball pivot of height control valve arm (Item 6) by positioning the height control valve linkage socket over threaded ball pivot and pushing linkage socket onto threaded ball pivot until it snaps in place, latch the linkage clip.

3. Push push to connect connector (Item 4) and air line (supply) (Item 1) into elbow fitting in “SUPPLY” port of height control valve (Item 3). Refer to **TORQUE CHART** for proper tightening of air line fittings.

4. Push air line (to air spring) (Item 2) into compression nut (Item 8) of elbow fitting in “SUSP” port of height control valve (Item 3). Refer to **TORQUE CHART** for proper tightening of air line fittings.

5. Build up air pressure and check for air leaks.

Refer to Figure 118 (See Figure 118, page 182) for Items in parentheses.

6. Check cab ride height between bottom of left and right cab mount plates (Items 19 and 20) and top of suspension crossmember bracket (Item 21). Cab air suspension ride height is 4 1/2 inches (114.3 mm) (Figure 180) (See Figure 180, page 340). If adjustment is required, refer to **ADJUSTMENTS, CAB AIR SUSPENSION SYSTEM FOR 5000*i* SERIES BEFORE SEPTEMBER 1997** (See CAB AIR SUSPENSION SYSTEM FOR 5000*i* SERIES BEFORE SEPTEMBER 1997, page 340).

Install Cab Air Suspension Shock Absorber

Refer to Figure 118 (See Figure 118, page 182) for Items in parentheses.

1. Position one shock absorber (Item 2) in place between left cab mount plate (Item 19) and suspension crossmember bracket (Item 21).

2. Install hex head bolt (Item 10) thru mounting bracket of suspension crossmember bracket (Item 21) and the bottom of shock absorber (Item 2) and install hex lock nut (Item 9). Tighten to 40 to 50 Lbf-ft (54 to 68 N•m).

3. Install hex head bolt (Item 8) thru left cab mount plate (Item 19) and the top of shock absorber (Item 2) and install hex lock nut (Item 9). Tighten to 40 to 50 Lbf-ft (54 to 68 N•m).

4. Position one shock absorber (Item 2) in place between right cab mount plate (Item 20) and suspension crossmember bracket (Item 21).

5. Install hex head bolt (Item 10) thru mounting bracket of suspension crossmember bracket (Item 21) and the bottom of shock absorber (Item 2) and install hex lock nut (Item 9). Tighten to 40 to 50 Lbf-ft (54 to 68 N•m).

6. Install hex head bolt (Item 8) thru right cab mount plate (Item 20) and the top of shock absorber (Item 2) and install hex lock nut (Item 9). Tighten to 40 to 50 Lbf-ft (54 to 68 N•m).

Install Cab Air Suspension Air Spring (Bag)

Refer to Figure 118 (See Figure 118, page 182) for Items in parentheses unless otherwise noted.

1. Position one air spring (bag) (Item 1) at threaded stud on left cab mount plate (Item 19), then screw it on until top of air spring (bag) is tight against left cab mount plate.

2. Position one air spring (bag) (Item 1) at threaded stud on right cab mount plate (Item 20), then screw it on until top of air spring (bag) is tight against right cab mount plate.

3. Release jack placed between frame rail flange and back of cab floor frame (Figure 106) (See Figure 106, page 148), lower cab, making sure bottom threaded stud of both air springs (bags) (Item 1) are positioned into mounting holes of suspension crossmember bracket (Item 21).

4. Install jam nut (Item 16) at the bottom of both air springs (bags) (Item 1) securing air springs (bags) to suspension crossmember bracket (Item 21). Tighten to 30 Lbf-ft (41 N•m).

5. Thread elbow fitting (Item 4) into bottom of each air spring (bag) (Item 1) and tighten. Refer to **TORQUE CHART** for proper tightening of air line fittings.

6. Push tee fitting (not shown) into compression nut of elbow fitting (Item 4) at the bottom of driver side air spring (bag) (Item 1) and tighten. Refer to **TORQUE CHART** for proper tightening of air line fittings.

7. Push air line (Item 5) into compression nut of tee fitting (not shown) in elbow fitting (Item 4) at the bottom of driver side air spring (bag) (Item 1) and tighten. Refer to **TORQUE CHART** for proper tightening of air line fittings.

8. Push air line (to air spring) (Item 5) into compression nut elbow fitting (Item 4) at the bottom of passenger side air spring (bag) (Item 1) and tighten. Refer to **TORQUE CHART** for proper tightening of air line fittings.

9. Build up air pressure and check for air spring operation. Also check for air leaks. Correct as necessary.

10. Check cab ride height between bottom of left and right cab mount plates (Items 19 and 20) and top of suspension crossmember bracket (Item 21). Cab air suspension ride height is 4 1/2 inches (114.3 mm) (Figure 180) (See Figure 180, page 340). If adjustment is required, refer to **ADJUSTMENTS, CAB AIR SUSPENSION SYSTEM FOR 5000*i* SERIES BEFORE SEPTEMBER 1997** (See CAB AIR SUSPENSION SYSTEM FOR 5000*i* SERIES BEFORE SEPTEMBER 1997, page 340).

Install Lateral Control Rod

Refer to Figure 118 (See Figure 118, page 182) for Items in parentheses.

1. Install lateral control rod (Item 23) as follows.
   a. Position lateral control rod (Item 23) in mounting bracket of suspension crossmember bracket (Item 21) and install hex head bolt (Item 11) from the rear thru mounting bracket of suspension crossmember bracket and lateral control rod (Item 23) and install hex lock nut (Item 12). Tighten to 40 to 45 Lbf-ft (54 to 61 N•m).
   b. Position lateral control rod (Item 23) in mounting bracket of left cab mount plate (Item 19) and install hex head bolt (Item 13) from the rear thru mounting bracket of left cab mount plate and lateral control rod and install hex lock nut (Item 12). Tighten to 40 to 45 Lbf-ft (54 to 61 N•m).

5.47. CAB AIR SUSPENSION SYSTEM FOR 5000*i* SERIES AFTER SEPTEMBER 1997

Refer to Figure 120 (See Figure 120, page 187) for Items in parentheses.

The cab air suspension system for the 5000*i* Series after September 1997 contains two air springs (bags) (Item 1), two shock absorbers (Item 2), and is controlled by the height control valve (Item 3). The air suspension assembly (Figure 120) (See Figure 120, page 187) needs no lubrication and very little maintenance.

The following components - air lines (to air spring) (Item 4), elbow fittings (Item 6), tee fitting (Item 7), air springs (bags) (Item 1), height control valve (Item 3), shock absorbers (Item 2) and lateral control arm (Item 24) - should be checked at the time the vehicle is being serviced. Immediate corrective action should be taken if a malfunction occurs.

NOTE – The height control valve (Item 3), air springs (bags) (Item 1) and shock absorbers (Item 2) are serviceable and can be replaced individually.

Periodically check tightness of all fasteners and air line fitting connections. Refer to the **TORQUE CHART** for (Figure 120) (See Figure 120, page 187) for proper tightening of all fasteners and air line fitting connections.

WARNING – To avoid personal injury, whenever any component is serviced or installed onto the air system, be sure to set parking brake and/or block vehicle wheels to prevent it from moving while service is being performed.

Install Height Control Valve

NOTE – If there is an attempt to disassemble or adjust fittings on the height control valve (Item 3, Figure 120) (See Figure 120, page 187), it will void the warranty. Contact the air suspension manufacturer for assistance.

Refer to Figure 121 (See Figure 121, page 190) for Items in parentheses.

1. Inspect height control valve (Item 3) to insure drive bearing notch (Item 7) is located on “SUSP” port side of valve. If not, loosen pan head bearing screw (Item 8), but not remove, and pull height control valve lever (Item 6) loose from drive bearing (Item 9) and rotate drive bearing until drive bearing notch is in correct position, then secure height control valve lever by tightening pan head bearing screw. Tighten to 40 to 50 Lbf-in (4.5 to 5.6 N•m).

Refer to Figure 120 (See Figure 120, page 187) for Items in parentheses.

2. Position height control valve (Item 3) in place on suspension crossmember bracket (Item 30) and install two hex head bolts (Item 8) thru height control valve and suspension crossmember bracket and install hex lock nuts (Item 9). Tighten to 8 to 10 Lbf-ft (11 to 14 N•m).

Refer to Figure 121 (See Figure 121, page 190) for Items in parentheses.

3. Install height control valve linkage (Item 5) onto threaded ball pivot of height control valve lever (Item 6) by positioning the height control valve linkage socket over threaded ball pivot and pushing linkage socket onto threaded ball pivot until it snaps in place, latch the linkage clip.

4. Push air line (supply) (Item 1) into “SUPPLY” port of height control valve (Item 3). Refer to **TORQUE CHART** for proper tightening of air line fittings.

5. Push air line (to air spring) (Item 2) from driver side air spring (bag) (Item 1) into compression nut (Item 4) of push to connect tee fitting (Item 12) in “SUSP” port of height control valve (Item 3) and tighten. Refer to **TORQUE CHART** for proper tightening of air line fittings.

6. Push air line (to air spring) (Item 2) from passenger side air spring (bag) (Item 1) into other compression nut (Item 4) of push to connect tee fitting (Item 12) in “SUSP” port of height control valve (Item 3) and tighten. Refer to **TORQUE CHART** for proper tightening of air line fittings.

7. Build up air pressure and check for air leaks.

Refer to Figure 120 (See Figure 120, page 187) for Items in parentheses.

8. Check cab ride height between bottom of left and right cab mount plates (Items 22 and 23) and top of suspension crossmember bracket (Item 30). Cab air suspension ride height is 4 1/2 inches (114.3 mm) (Figure 180) (See Figure 180, page 340). If adjustment is required, refer to **ADJUSTMENTS, CAB AIR SUSPENSION SYSTEM FOR 5000*i* SERIES AFTER SEPTEMBER 1997** (See CAB AIR SUSPENSION SYSTEM FOR 5000*i* SERIES AFTER SEPTEMBER 1997, page 341).

Install Cab Air Suspension Shock Absorber

Refer to Figure 120 (See Figure 120, page 187) for Items in parentheses.

1. Position one shock absorber (Item 2) in place between left cab mount plate (Item 22) and suspension crossmember bracket (Item 30).

2. Install hex head bolt (Item 12) from the rear thru mounting bracket of suspension crossmember bracket (Item 30) and the bottom of shock absorber (Item 2) and install hex lock nut (Item 11). Tighten to 40 to 50 Lbf-ft (54 to 68 N•m).

3. Install hex head bolt (Item 10) from the rear thru left cab mount plate (Item 22) and the top of shock absorber (Item 2) and install hex lock nut (Item 11). Tighten to 40 to 50 Lbf-ft (54 to 68 N•m).

4. Position one shock absorber (Item 2) in place between right cab mount plate (Item 23) and suspension crossmember bracket (Item 30).

5. Install hex head bolt (Item 12) from the rear thru mounting bracket of suspension crossmember bracket (Item 30) and the bottom of shock absorber (Item 2) and install hex lock nut (Item 11). Tighten to 40 to 50 Lbf-ft (54 to 68 N•m).

6. Install hex head bolt (Item 10) from the rear thru right cab mount plate (Item 23) and the top of shock absorber (Item 2) and install hex lock nut (Item 11). Tighten to 40 to 50 Lbf-ft (54 to 68 N•m).

Install Cab Air Suspension Air Spring (Bag)

Refer to Figure 120 (See Figure 120, page 187) for Items in parentheses unless otherwise noted.

1. Position one air spring (bag) (Item 1) at threaded stud on left cab mount plate (Item 22), then screw it on until top of air spring (bag) is tight against left cab mount plate.

2. Position one air spring (bag) (Item 1) at threaded stud on right cab mount plate (Item 23), then screw it on until top of air spring (bag) is tight against right cab mount plate.

3. Release jack placed between frame rail flange and back of cab floor frame (Figure 106) (See Figure 106, page 148), lower cab, making sure bottom threaded studs of both air springs (bags) (Item 1) are positioned into mounting holes of suspension crossmember bracket (Item 30).

4. Install jam nut (Item 20) at the bottom of both air springs (bags) (Item 1) securing air springs (bags) to suspension crossmember bracket (Item 30). Tighten to 30 Lbf-ft (41 N•m).

5. Thread elbow fitting (Item 6) into bottom of each air spring (bag) (Item 1) and make sure they connect properly. Refer to **TORQUE CHART** for proper tightening of air line fittings.

6. Push air line (Item 4) into compression nut of push to connect elbow fitting (Item 6) at the bottom of driver side air spring (bag) (Item 1) and tighten. Refer to **TORQUE CHART** for proper tightening of air line fittings.

7. Push air line (Item 4) into compression nut of push to connect elbow fitting (Item 6) at the bottom of passenger side air spring (bag) (Item 1) and tighten. Refer to **TORQUE CHART** for proper tightening of air line fittings.

8. Build up air pressure and check for air spring operation. Also check for air leaks. Correct as necessary.

9. Check cab ride height between bottom of left and right cab mount plates (Items 22 and 23) and top of suspension crossmember bracket (Item 30). Cab air suspension ride height is 4 1/2 inches (114.3 mm) (Figure 180) (See Figure 180, page 340). If adjustment is required, refer to **ADJUSTMENTS, CAB AIR SUSPENSION SYSTEM FOR 5000*i* SERIES AFTER SEPTEMBER 1997** (See CAB AIR SUSPENSION SYSTEM FOR 5000*i* SERIES AFTER SEPTEMBER 1997, page 341).

Install Lateral Control Rod

Refer to Figure 120 (See Figure 120, page 187) for Items in parentheses.

1. Install lateral control rod (Item 24) as follows.

   a. Position lateral control rod (Item 24) in mounting bracket of suspension crossmember bracket (Item 30) and install hex head bolt (Item 15) from the rear thru mounting bracket of suspension crossmember bracket and lateral control rod (Item 24) and install hex lock nut (Item 16). Tighten to 40 to 45 Lbf-ft (54 to 61 N•m).

   b. Position lateral control rod (Item 24) in mounting bracket of left cab mount plate (Item 22) and install hex head bolt (Item 13) from the rear thru mounting bracket of left cab mount plate and lateral control rod and install hex lock nut (Item 14). Tighten to 40 to 45 Lbf-ft (54 to 61 N•m).

5.48. CAB AIR SUSPENSION SYSTEM FOR 5000*i* SERIES AFTER FEBRUARY 2001

Refer to Figure 122 (See Figure 122, page 193) for Items in parentheses.

The cab air suspension system for the 5000*i* Series after February 2001 contains two air springs (bags) (Item 1), two shock absorbers (Item 2), and is controlled by the height control valve (Item 3). The air suspension assembly (Figure 122) (See Figure 122, page 193) needs no lubrication and very little maintenance.

The following components - air lines (to air spring) (Item 4), elbow fittings (Item 6), tee fitting (Item 7), air springs (bags) (Item 1), height control valve (Item 3), shock absorbers (Item 2) and lateral control arm (Item 24) - should be checked at the time the vehicle is being serviced. Immediate corrective action should be taken if a malfunction occurs.

NOTE – The height control valve (Item 3), air springs (bags) (Item 1) and shock absorbers (Item 2) are serviceable and can be replaced individually.

Periodically check tightness of all fasteners and air line fitting connections. Refer to the **TORQUE CHART** for (Figure 122) (See Figure 122, page 193) for proper tightening of all fasteners and air line fitting connections.

WARNING – To avoid personal injury, whenever any component is serviced or installed onto the air system, be sure to set parking brake and/or block vehicle wheels to prevent it from moving while service is being performed.

Install Height Control Valve

NOTE – If there is an attempt to disassemble or adjust fittings on the height control valve (Item 3, Figure 122) (See Figure 122, page 193), it will void the warranty. Contact the air suspension manufacturer for assistance.

Refer to Figure 121 (See Figure 121, page 190) for Items in parentheses.

1. Inspect height control valve (Item 3) to insure drive bearing notch (Item 7) is located on “SUSP” port side of valve. If not, loosen pan head bearing screw (Item 8), but not remove, and pull height control valve lever (Item 6) loose from drive bearing (Item 9) and rotate drive bearing until drive bearing notch is in correct position, then secure height control valve lever by tightening pan head bearing screw. Tighten to 40 to 50 Lbf-in (4.5 to 5.6 N•m).

Refer to Figure 122 (See Figure 122, page 193) for Items in parentheses unless otherwise noted.

2. Position height control valve (Item 3) in place on suspension crossmember bracket (Item 30) and install two hex head bolts (Item 8) thru height control valve and suspension crossmember bracket and install hex lock nuts (Item 9). Tighten to 8 to 10 Lbf-ft (11 to 14 N•m).

Refer to Figure 121 (See Figure 121, page 190) for Items in parentheses.

3. Install height control valve linkage (Item 5) onto threaded ball pivot of height control valve lever (Item 6) by positioning the height control valve linkage socket over threaded ball pivot and pushing linkage socket onto threaded ball pivot until it snaps in place, latch the linkage clip.

4. Push air line (supply) (Item 1) into “SUPPLY” port of height control valve (Item 3). Refer to **TORQUE CHART** for proper tightening of air line fittings.

5. Push air line (to air spring) (Item 2) from driver side air spring (bag) (Item 1) into compression nut (Item 4) of push to connect tee fitting (Item 12) in “SUSP” port of height control valve (Item 3) and tighten. Refer to **TORQUE CHART** for proper tightening of air line fittings.

6. Push air line (to air spring) (Item 2) from passenger side air spring (bag) (Item 1) into other compression nut (Item 4) of push to connect tee fitting (Item 12) in “SUSP” port of height control valve (Item 3) and tighten. Refer to **TORQUE CHART** for proper tightening of air line fittings.

7. Build up air pressure and check for air leaks.

Refer to Figure 122 (See Figure 122, page 193) for Items in parentheses unless otherwise noted.

8. Check cab ride height between bottom of left and right cab mount plate (Items 22 and 23) and top of suspension crossmember bracket (Item 30). Cab air suspension ride height is 4 1/2 inches (114.3 mm) (Figure 180) (See Figure 180, page 340). If adjustment is required, refer to **ADJUSTMENTS, CAB AIR SUSPENSION SYSTEM FOR 5000*i* SERIES AFTER FEBRUARY 2001** (See CAB AIR SUSPENSION SYSTEM FOR 5000*i* SERIES AFTER FEBRUARY 2001, page 342).

Install Cab Air Suspension Shock Absorber

Refer to Figure 122 (See Figure 122, page 193) for Items in parentheses.

NOTE – Shock Absorber mounting bolts (Item 10 and 12) are reversed so that they are installed from the front instead of from the rear of the air suspension system on vehicles built after February 2001.

1. Position one shock absorber (Item 2) in place between left cab mount plate (Item 22) and suspension crossmember bracket (Item 30).

2. Install hex head bolt (Item 12) from the front thru mounting bracket of suspension crossmember bracket (Item 30) and the bottom of shock absorber (Item 2) and install hex lock nut (Item 11). Tighten to 45 Lbf-ft (61 N•m).

3. Install hex head bolt (Item 10) from the front thru left cab mount plate (Item 22) and the top of shock absorber (Item 2) and install hex lock nut (Item 11). Tighten to 45 Lbf-ft (61 N•m).

4. Position one shock absorber (Item 2) in place between right cab mount plate (Item 23) and suspension crossmember bracket (Item 30).

5. Install hex head bolt (Item 12) from the front thru mounting bracket of suspension crossmember bracket (Item 30) and the bottom of shock absorber (Item 2) and install hex lock nut (Item 11). Tighten to 45 Lbf-ft (61 N•m).

6. Install hex head bolt (Item 10) from the front thru right cab mount plate (Item 23) and the top of shock absorber (Item 2) and install hex lock nut (Item 11). Tighten to 45 Lbf-ft (61 N•m).

Install Cab Air Suspension Air Spring (Bag)

Refer to Figure 122 (See Figure 122, page 193) for Items in parentheses unless otherwise noted.

1. Position one air spring (bag) (Item 1) at threaded stud on left cab mount plate (Item 22), then screw it on until top of air spring (bag) is tight against left cab mount plate.

2. Position one air spring (bag) (Item 1) at threaded stud on right cab mount plate (Item 23), then screw it on until top of air spring (bag) is tight against right cab mount plate.

3. Release jack placed between frame rail flange and back of cab floor frame (Figure 106) (See Figure 106, page 148), lower cab, making sure bottom threaded studs of both air springs (bags) (Item 1) are positioned into mounting holes of suspension crossmember bracket (Item 30).

4. Install jam nut (Item 20) at the bottom of both air springs (bags) (Item 1) securing air springs (bags) to suspension crossmember bracket (Item 30). Tighten to 30 Lbf-ft (41 N•m).

5. Push push to connect elbow fitting (Item 6) into the bottom of each air spring (bag) (Item 1) and make sure they connect properly. Refer to **TORQUE CHART** for proper tightening of air line fittings.

6. Push air line (Item 4) into compression nut of push to connect elbow fitting (Item 6) at the bottom of driver side air spring (bag) (Item 1) and tighten. Refer to **TORQUE CHART** for proper tightening of air line fittings.

7. Push air line (Item 4) into compression nut of push to connect elbow fitting (Item 6) at the bottom of passenger side air spring (bag) (Item 1) and tighten. Refer to **TORQUE CHART** for proper tightening of air line fittings.

8. Build up air pressure and check for air spring operation. Also check for air leaks. Correct as necessary.

9. Check cab ride height between bottom of left and right cab mount plate (Items 22 and 23) and top of suspension crossmember bracket (Item 30). Cab air suspension ride height is 4 1/2 inches (114.3 mm) (Figure 180) (See Figure 180, page 340). If adjustment is required, refer to **ADJUSTMENTS, CAB AIR SUSPENSION SYSTEM FOR 5000*i* SERIES AFTER FEBRUARY 2001** (See CAB AIR SUSPENSION SYSTEM FOR 5000*i* SERIES AFTER FEBRUARY 2001, page 342).

Install Lateral Control Rod

Refer to Figure 122 (See Figure 122, page 193) for Items in parentheses.

1. Install lateral control rod (Item 24) as follows.
   a. Position lateral control rod (Item 24) in mounting bracket of suspension crossmember bracket (Item 30) and install hex head bolt (Item 15) from the rear thru mounting bracket of suspension crossmember bracket and lateral control rod (Item 24) and install hex lock nut (Item 16). Tighten to 40 to 45 Lbf-ft (54 to 61 N•m).
   b. Position lateral control rod (Item 24) in mounting bracket of left cab mount plate (Item 22) and install hex head bolt (Item 13) from the rear thru mounting bracket of cab mount plate and lateral control rod and install hex lock nut (Item 14). Tighten to 40 to 45 Lbf-ft (54 to 61 N•m).

6. 5000*i* SERIES VEHICLES WITH F.W.P.T.O

6.1. ENGINE COVER ACCESS DOOR FOR VEHICLES WITH F.W.P.T.O.

5000*i* series vehicles with Flywheel P.T.O. drivelines have an access door in the engine cover assembly. This will help servicing the P.T.O. (Figure 165) (See Figure 165, page 321).

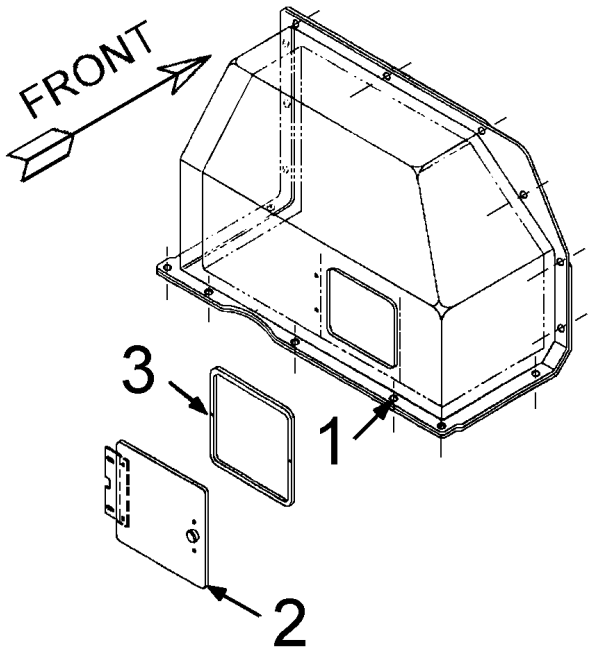

Figure 165 Access Door in Engine Cover Assembly

1. ENGINE COVER
2. ACCESS DOOR
3. DOOR SEAL

7. TROUBLESHOOTING

7.1. ELECTRIC WIPERS

Table 1 Electric Wiper Troubleshooting Chart

Condition	Probable Cause	Remedy
Stripped gear teeth	1. Normal wear/frozen wiper arm.	1. Replace complete unit.
Wiper will not operate	1. Binding condition in wiper arm shaft assemblies, connecting links, gear and shaft assembly or armature.	1. Eliminate binding condition. If gear or shaft, replace motor assembly.
	2. Short, open, or ground in cable harness.	2. Refer to Electrical Troubleshooting Manual.
	3. Faulty manual switch.	3. Replace switch.
	4. Shorted, open, or grounded armature.	4. Replace motor assembly.
	5. Broken wire to motor assembly.	5. Correct.
Wiper will not shut off	1. Faulty parking switch assembly.	1. Replace complete unit.
	2. Faulty manual switch.	2. Replace manual switch.

Table 1 Electric Wiper Troubleshooting Chart (cont.)

Condition	Probable Cause	Remedy
Wiper continually shutting off	1. Binding condition in wiper arm shaft assemblies, connecting link, or gear and shaft assembly.	1. Eliminate binding condition.
	2. Electrical overload due to faulty motor.	2. Replace motor assembly.
	3. Faulty wire connections.	3. Correct.
Wiper operates at one speed only	1. Short, open, or ground in cable harness.	1. Refer to Electrical Troubleshooting Manual.
	2. Faulty manual switch.	2. Replace switch.

7.2. WASHER PUMP

Table 2 Washer Pump Troubleshooting Chart

Condition	Probable Cause	Remedy
Pump will not operate	1. No voltage to pump motor.	1. Check for open circuit or blown fuse.
	2. Defective switch.	2. Replace switch.
	3. Defective motor.	3. Replace pump/motor assembly.
	4. Nozzles plugged or dirt in reservoir.	4. Clean nozzles and service reservoir as required.
Pump operates but pressure is weak	1. Hoses loose, kinked or damaged.	1. Reinstall or replace hose.
	2. Nozzles plugged or dirt in reservoir.	2. Clean nozzles and service reservoir as required.
	3. Defective motor or pump.	3. Replace pump/motor assembly.
Pump operates but no washer solution delivered	1. No solution in reservoir.	1. Fill reservoir.
	2. Hoses loose, kinked or damaged.	2. Reinstall or replace hoses.
	3. Nozzles plugged or dirt in reservoir.	3. Clean nozzles or reservoir as required.
	4. Solution frozen.	4. Thaw out system and replace washer solvent.
	5. Defective pump.	5. Replace pump/motor assembly.

7.3. CAB AIR SUSPENSION SYSTEM FOR 5000*I* SERIES

Table 3 Cab Air Suspension System for 5000*i* Series

Condition	Probable Cause	Remedy
Air suspension system losing air	1. Air line leaking.	1. Replace air line.
	2. Air fitting leaking.	2. Remove fitting and apply fresh joint compound. Reinstall fitting, but do not overtighten. Do not use Teflon tape. Replace if required.
Air springs	1. Improper height.	1. Adjust valve linkage to maintain proper air spring height.
	2. Air spring leakage.	2. Replace air spring.
Height control valve	1. Air leakage from joint between valve halves.	1. Tighten 4 phillips head screws.
	2. Air springs will not inflate when weight is added to cab.	2. Replace valve.
	3. Air springs will not deflate when weight is removed from cab.	3. Replace valve.
Air suspension shock absorber	1. Insufficient dampening effect.	1. Replace shock absorber.
Lateral control rod	1. Loose nuts on lateral control rod bolts.	1. Tighten securely to clamp the inner sleeve.
	2. Worn bushings.	2. Replace lateral control rod.

8. ADJUSTMENTS

Proper adjustments are critical to the cab structure, as this will affect the functioning of other components of the vehicle. The following adjustments must be performed in the order listed below. Before adjusting the hood or squaring the cab, refer to the segment on mounting for the proper cab mounting.

8.1. CAB SQUARING

Cab squaring is the centering and perpendicular positioning of the cab structure to the frame. The cab must be squared whenever the cab has been removed from the chassis for repair, or if a new cab is being mounted.

The cab must be properly squared to the frame as this adjustment will affect the relationship between the cab, hood and sleeper box. Improper squaring may result in unacceptable appearance and interference between the above units. Be sure the chassis is on a level surface before squaring.

Refer to Figure 166 for Items in parentheses.

1. Center cab (Item 1) on frame rail (Item 4) by using dimension (Item A) from cab cowl (Item 5) to frame rail.

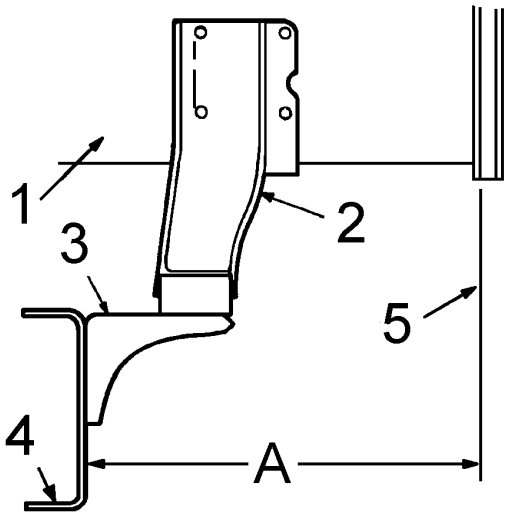

Figure 166 Cab Front Mounting Dimension

A. 20 INCHES (508 mm)
1. CAB
2. CAB FRONT MOUNTING BRACKET
3. CAB FRONT MOUNTING RETAINER
4. FRAME RAIL
5. CAB COWL LINE

Refer to Figure 167 for Items in parentheses.

2. Adjust cab to make cowl and back panel parallel and perpendicular to the frame. Add or remove shims (Item 2) between crossmember (Item 3) and cab lower rear mounting bracket (Item 1).

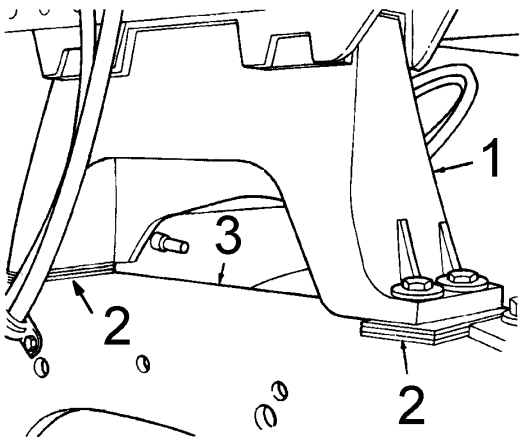

Figure 167 Cab Rear Mounting

1. LOWER REAR MOUNTING BRACKET
2. SHIMS
3. CROSSMEMBER

8.2. CAB AIR RIDE SYSTEM FOR 9200*I*/9400*I*/9900*I* DAY CAB MODELS WITHOUT DETROIT DIESEL ENGINES BEFORE DECEMBER 2001

To adjust cab ride height, measure ride height between bottom of air suspension upper mounting plate to top of crossmember the air suspension lower mounting plate is mounted on(Figure 168). If dimension does not meet specified height of 7 3/4 inches (196.9 mm), adjust as necessary using the following procedure.

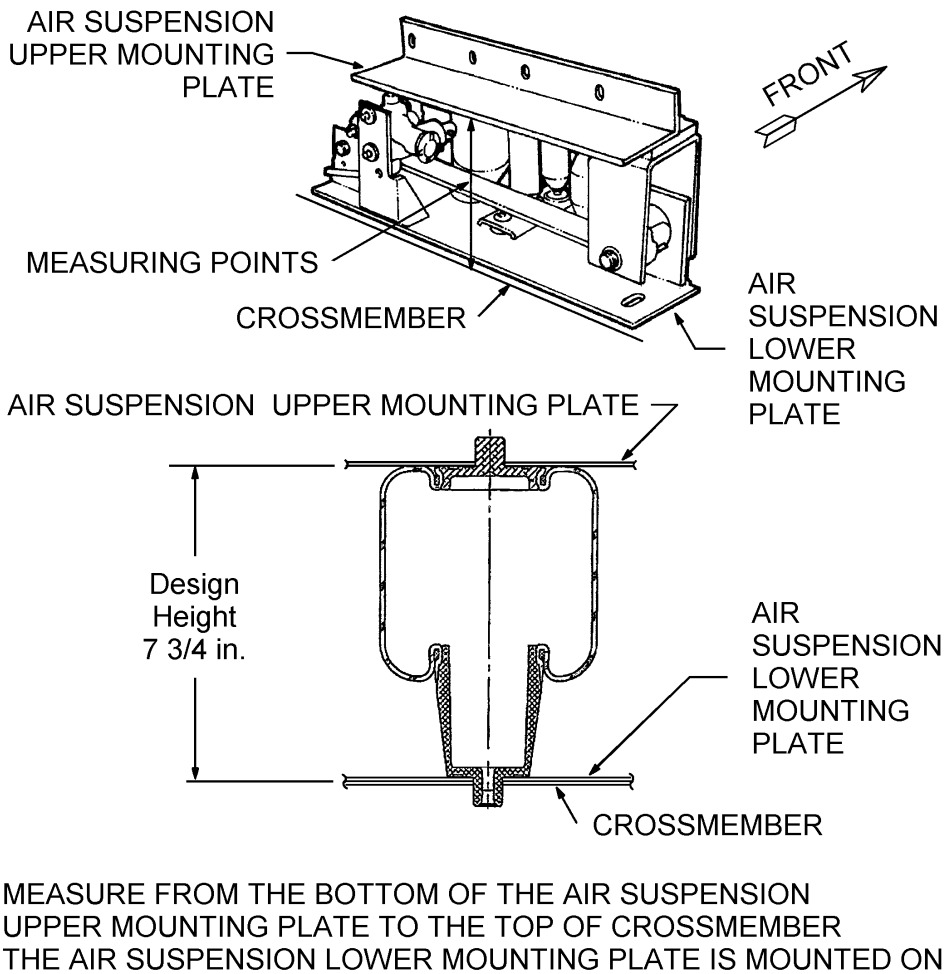

Figure 168 Cab Height Measuring Points for Cab Air Ride System for 9200*i*, 9400*i* and 9900*i* Day Cab Models without Detroit Diesel Engines before December 2001

1. Have air system fully charged.

Refer to Figure 169 for Items in parentheses.

2. Loosen valve adjuster rod lock bolt (Item 4).

3. Move horizontal adjuster rod (Item 5) up or down as needed on vertical adjuster rod (Item 6) to achieve correct ride height between bottom of air suspension upper mounting plate and top of air suspension lower mounting plate on crossmember (Figure 168) (See Figure 168, page 325).

4. After correct ride height is achieved, tighten valve adjuster rod lock bolt (Item 4).

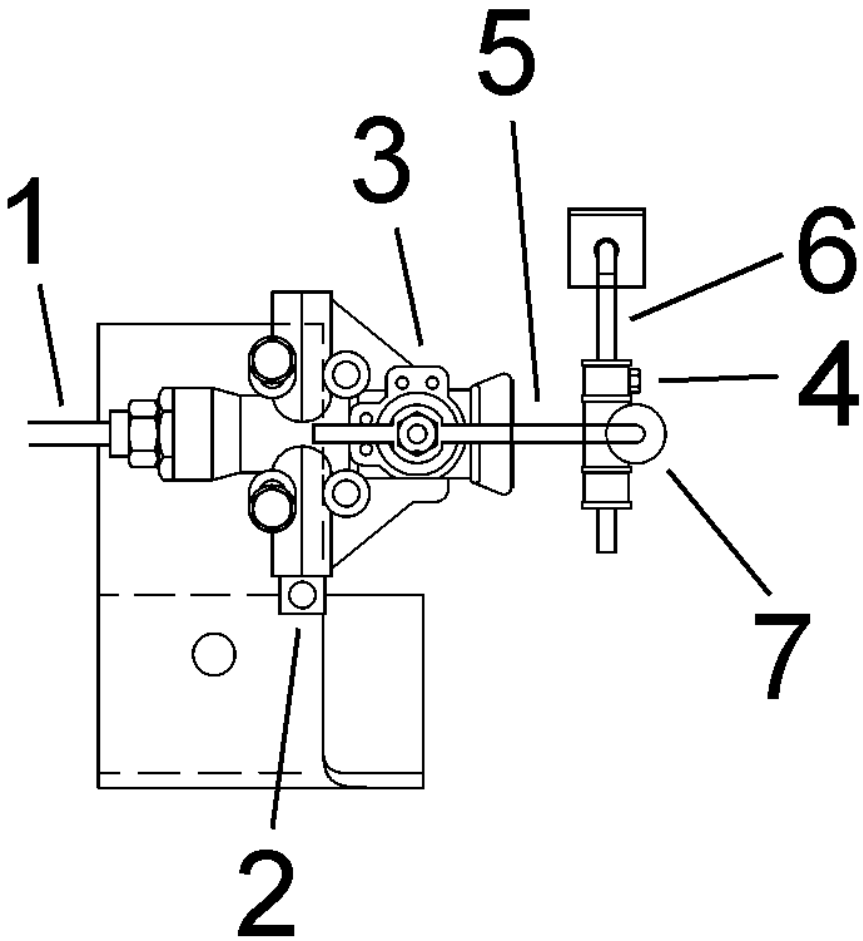

Figure 169 Cab Height Measuring Points for Cab Air Ride System for 9200*i*, 9400*i* and 9900*i* Day Cab Models without Detroit Diesel Engines before December 2001

1. AIR LINE (SUPPLY)
2. AIR LINE (TO AIR SPRING) WITH ELBOW FITTING
3. HEIGHT CONTROL VALVE
4. VALUE ADJUSTER ROD LOCK BOLT
5. HORIZONTAL ADJUSTER ROD
6. VERTICAL ADJUSTER ROD
7. HORIZONTAL ADJUSTER ROD LOCK

8.3. CAB AIR SUSPENSION SYSTEM FOR 9200*I*/9400*I*/9900*I* DAY CAB MODELS WITHOUT DETROIT DIESEL ENGINES AFTER DECEMBER 2001

To adjust cab ride height, measure ride height between bottom of lateral control rod and top of air suspension lower mounting plate of cab air suspension system (Figure 170). If dimension does not meet specified height of 2 inches (50.8 mm), adjust as necessary using the following procedure.

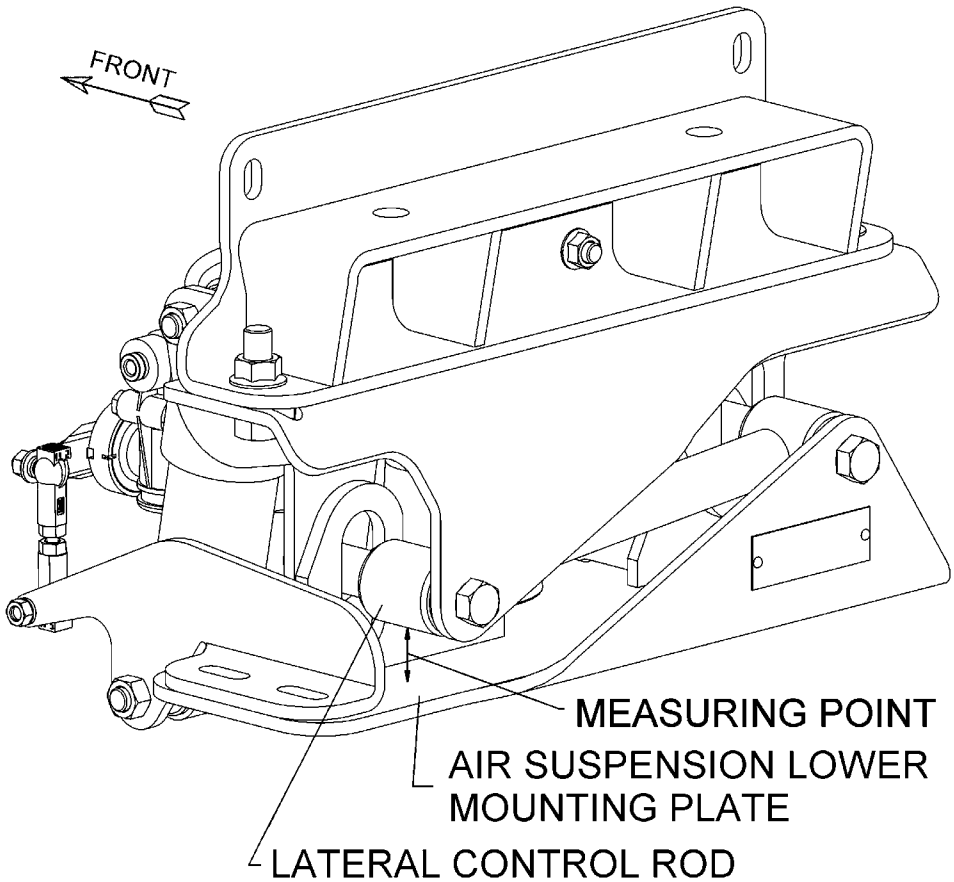

Figure 170 Cab Height Measuring Points for Cab Air Suspension System for 9200*i*, 9400*i* and 9900*i* Day Cab Models without Detroit Diesel Engines after December 2001

1. Have air system fully charged.

Refer to Figure 171 for Items in parentheses.

2. Remove one end of height control valve linkage (Item 4) from threaded ball pivot (Item 31, Figure 108) (See Figure 108, page 152) by unlatching linkage clip and carefully pry the height control valve linkage socket from threaded ball pivot.

3. Loosen one of the jam nuts (Item 7) and back off the nut several turns.

4. Turn the height control valve linkage (Item 4) clockwise to shorten the linkage or counterclockwise to lengthen the linkage to adjust the linkage properly.

IMPORTANT – There must be a minimum of 5 full threads engaged between the threaded rod and the linkage socket. If a longer valve linkage is required, contact Link Manufacturing customer service for assistance.

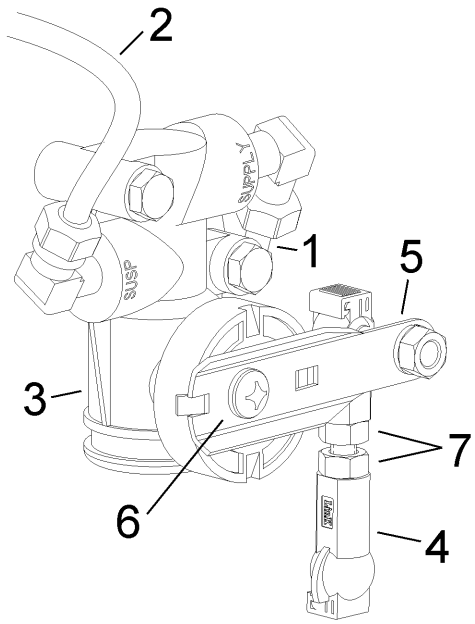

Figure 171 Cab Air Suspension Height Control for Cab Air Suspension System for 9200*i*, 9400*i* and 9900*i* Day Cab Models without Detroit Diesel Engines after December 2001

1. AIR LINE (SUPPLY)
2. AIR LINE (TO AIR SPRING)
3. HEIGHT CONTROL VALVE
4. HEIGHT CONTROL VALVE LINKAGE
5. HEIGHT CONTROL VALVE ARM
6. PAN HEAD SCREW, 1/4–15 X 1/2
7. JAM NUT

5. Reconnect height control valve linkage (Item 4) onto threaded ball pivot (Item 31, Figure 108) (See Figure 108, page 152) by positioning the height control valve linkage socket over threaded ball pivot and pushing linkage socket onto threaded ball pivot until it snaps in place.

6. Re-measure the cab ride height, if necessary, continue to make adjustments until proper cab ride height is obtained.

7. When the height control valve linkage (Item 4) is properly adjusted, latch the linkage clip and tighten jam nut (Item 7). Tighten to Hand tight + 1/8 turn.

8.4. CAB AIR SUSPENSION SYSTEM FOR 9200*I* DAY CAB MODELS WITH DETROIT DIESEL ENGINES BEFORE JANUARY 1997

To adjust cab ride height, measure ride height between bottom of cab mounting plate and top of crossmember mounting plate (Figure 172). If dimension does not meet specified height of 5 3/16 inches ± 1/16 (131.8 ± 1.6 mm) for cab air suspension with single bag system, adjust as necessary using the following procedure.

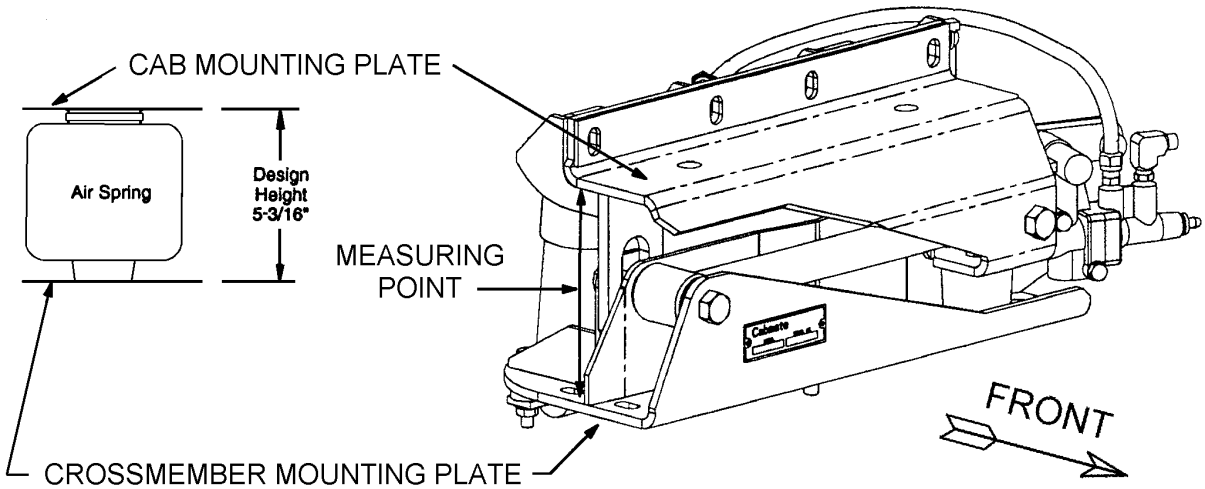

Figure 172 Cab Height Measuring Points for Cab Air Suspension System for 9200*i* Day Cab Models with Detroit Diesel Engines before January 997 and Cab Air Suspension System for 9100*i* and 9200*i* Day Cab Models after January 1997

1. Have air system fully charged.

Refer to Figure 173 for Items in parentheses.

2. Remove one end of height control valve linkage (Item 4) from threaded ball pivot (Item 31, Figure 110) (See Figure 110, page 158) by unlatching linkage clip and carefully pry the height control valve linkage socket from threaded ball pivot.

3. Loosen one of the jam nuts (Item 7) and back off the nut several turns.

4. Turn the height control valve linkage (Item 4) clockwise to shorten the linkage or counterclockwise to lengthen the linkage to adjust the linkage properly.

IMPORTANT – There must be a minimum of 5 full threads engaged between the threaded rod and the linkage socket. If a longer valve linkage is required, contact Link Manufacturing customer service for assistance.

5. Height control valve arm (Item 5) has a slot (Item 6) which will allow for course adjustment also.

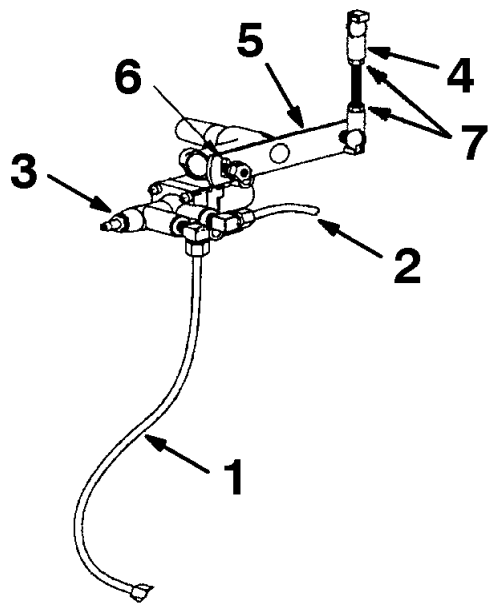

Figure 173 Cab Air Suspension Height Control for Cab Air Suspension System for 9200*i* Day Cab Models with Detroit Diesel Engines before January 997 and Cab Air Suspension System for 9100*i* and 9200*i* Day Cab Models after January 1997

1. AIR LINE (SUPPLY)
2. AIR LINE (TO AIR SPRING)
3. HEIGHT CONTROL VALVE
4. HEIGHT CONTROL VALVE LINKAGE
5. HEIGHT CONTROL VALVE ARM
6. SLOT FOR COARSE ADJUSTMENT
7. JAM NUT

6. Reconnect height control valve linkage (Item 4) onto threaded ball pivot (Item 31, Figure 110) (See Figure 110, page 158) by positioning the height control valve linkage socket over threaded ball pivot and pushing linkage socket onto threaded ball pivot until it snaps in place.

7. Re-measure the cab ride height, if necessary, continue to make adjustments until proper cab ride height is obtained.

8. When the height control valve linkage (Item 4) is properly adjusted, latch the linkage clip and tighten jam nut (Item 7). Tighten to Hand tight + 1/8 turn.

8.5. CAB AIR SUSPENSION SYSTEM FOR 9100*I* AND 9200*I* DAY CAB MODELS AFTER JANUARY 1997

To adjust cab ride height, measure ride height between bottom of cab mounting plate and top of crossmember mounting plate (Figure 172) (See Figure 172, page 329). If dimension does not meet specified height of 5 3/16 inches ± 1/16 (131.8 ± 1.6 mm) for cab air suspension with single bag system, adjust as necessary using the following procedure.

1. Have air system fully charged.

Refer to Figure 173 (See Figure 173, page 330) for Items in parentheses.

2. Remove one end of height control valve linkage (Item 4) from threaded ball pivot (Item 31, Figure 110) (See Figure 110, page 158) by unlatching linkage clip and carefully pry the height control valve linkage socket from threaded ball pivot.

3. Loosen one of the jam nuts (Item 7) and back off the nut several turns.

4. Turn the height control valve linkage (Item 4) clockwise to shorten the linkage or counterclockwise to lengthen the linkage to adjust the linkage properly.

IMPORTANT – There must be a minimum of 5 full threads engaged between the threaded rod and the linkage socket. If a longer valve linkage is required, contact Link Manufacturing customer service for assistance.

5. Height control valve arm (Item 5) has a slot (Item 6) which will allow for course adjustment also.

6. Reconnect height control valve linkage (Item 4) onto threaded ball pivot (Item 31, Figure 110) (See Figure 110, page 158) by positioning the height control valve linkage socket over threaded ball pivot and pushing linkage socket onto threaded ball pivot until it snaps in place.

7. Re-measure the cab ride height, if necessary, continue to make adjustments until proper cab ride height is obtained.

8. When the height control valve linkage (Item 4) is properly adjusted, latch the linkage clip and tighten jam nut (Item 7). Tighten to Hand tight + 1/8 turn.

8.6. CAB AIR SUSPENSION SYSTEM FOR 9200*i* DAY CAB MODELS WITH DETROIT DIESEL ENGINES BEFORE MARCH 1997

To adjust cab ride height, measure ride height between bottom of cab mounting plate and top of crossmember mounting plate (Figure 174). If dimension does not meet specified height of 5 3/16 inches ± 1/16 (131.8 ± 1.6 mm) for cab air suspension with single bag system, adjust as necessary using the following procedure.

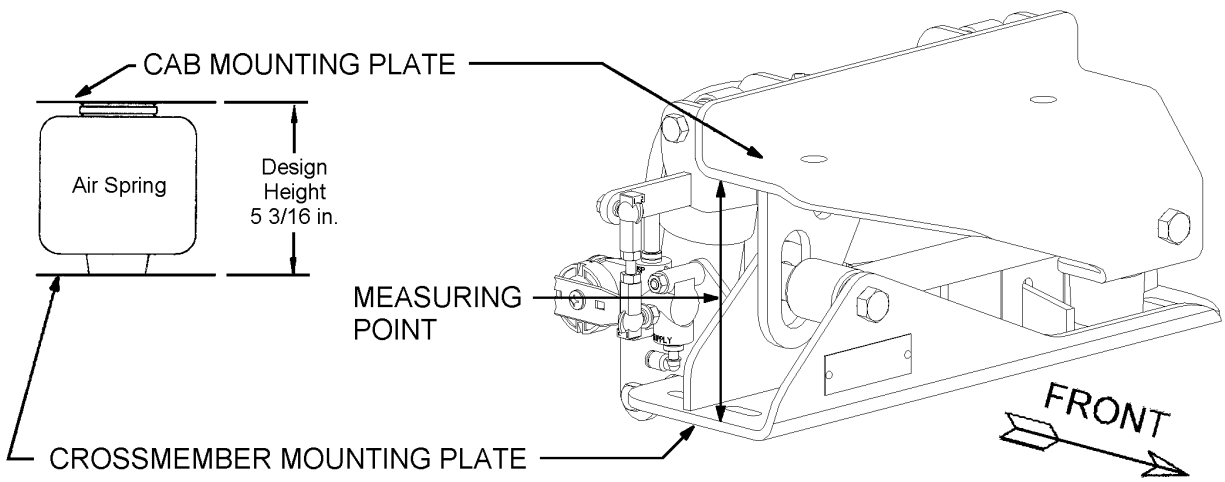

Figure 174 Cab Height Measuring Points for Cab Air Suspension System for 9200*i* Day Cab Models with Detroit Diesel Engines before March 1997 and Cab Air Suspension System for the 9100*i* and 9200*i* Day Cab Models after March 1997

1. Have air system fully charged.

Refer to Figure 175 for Items in parentheses.

2. Remove one end of height control valve linkage (Item 4) from threaded ball pivot (Item 25, Figure 112) (See Figure 112, page 165) by unlatching linkage clip and carefully pry the height control valve linkage socket from threaded ball pivot.

3. Loosen one of the jam nuts (Item 7) and back off the nut several turns.

4. Turn the height control valve linkage (Item 4) clockwise to shorten the linkage or counterclockwise to lengthen the linkage to adjust the linkage properly.

IMPORTANT – There must be a minimum of 5 full threads engaged between the threaded rod and the linkage socket. If a longer valve linkage is required, contact Link Manufacturing customer service for assistance.

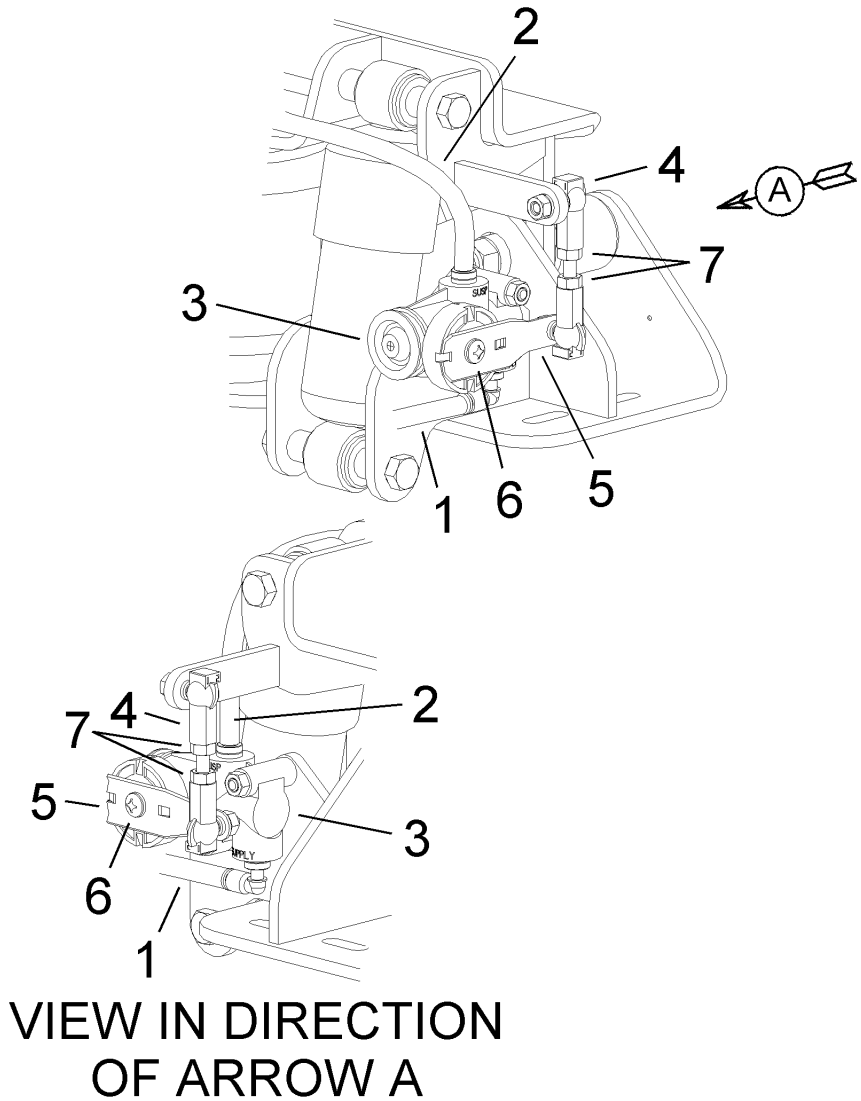

Figure 175 Cab Air Suspension Height Control for Cab Air Suspension System for 9200*i* Day Cab Models with Detroit Diesel Engines before March 1997 and Cab Air Suspension System for the 9100*i* and 9200*i* Day Cab Models after March 1997

1. AIR LINE (SUPPLY)
2. AIR LINE (TO AIR SPRING)
3. HEIGHT CONTROL VALVE
4. HEIGHT CONTROL VALVE LINKAGE
5. HEIGHT CONTROL VALVE ARM
6. PAN HEAD SCREW, 1/4–15 X 1/2
7. JAM NUT

5. Reconnect height control valve linkage (Item 4) onto threaded ball pivot (Item 25, Figure 112) (See Figure 112, page 165) by positioning the height control valve linkage socket over threaded ball pivot and pushing linkage socket onto threaded ball pivot until it snaps in place.

6. Re-measure the cab ride height, if necessary, continue to make adjustments until proper cab ride height is obtained.

7. When the height control valve linkage (Item 4) is properly adjusted, latch the linkage clip and tighten jam nut (Item 7). Tighten to Hand tight + 1/8 turn.

8.7. CAB AIR SUSPENSION SYSTEM FOR 9100*i* AND 9200*i* DAY CAB MODELS AFTER MARCH 1997

To adjust cab ride height, measure ride height between bottom of cab mounting plate and top of crossmember mounting plate (Figure 174) (See Figure 174, page 331). If dimension does not meet specified height of 5 3/16 inches ± 1/16 (131.8 ± 1.6 mm) for cab air suspension with single bag system, adjust as necessary using the following procedure.

1. Have air system fully charged.

Refer to Figure 175 (See Figure 175, page 333) for Items in parentheses.

2. Remove one end of height control valve linkage (Item 4) from threaded ball pivot (Item 25, Figure 112) (See Figure 112, page 165) by unlatching linkage clip and carefully pry the height control valve linkage socket from threaded ball pivot.

3. Loosen one of the jam nuts (Item 7) and back off the nut several turns.

4. Turn the height control valve linkage (Item 4) clockwise to shorten the linkage or counterclockwise to lengthen the linkage to adjust the linkage properly.

IMPORTANT – There must be a minimum of 5 full threads engaged between the threaded rod and the linkage socket. If a longer valve linkage is required, contact Link Manufacturing customer service for assistance.

5. Reconnect height control valve linkage (Item 4) onto threaded ball pivot (Item 25, Figure 112) (See Figure 112, page 165) by positioning the height control valve linkage socket over threaded ball pivot and pushing linkage socket onto threaded ball pivot until it snaps in place.

6. Re-measure the cab ride height, if necessary, continue to make adjustments until proper cab ride height is obtained.

7. When the height control valve linkage (Item 4) is properly adjusted, latch the linkage clip and tighten jam nut (Item 7). Tighten to Hand tight + 1/8 turn.

8.8. CAB AIR SUSPENSION SYSTEM FOR 9200*i*/9400*i*/9900*i* MODELS WITH PRO-SLEEPER® BEFORE APRIL 2000

Cab air suspension system for 9200*i*, 9400*i* and 9900*i* models with Pro-Sleeper® is set at the factory and should not need adjustment. Cab air suspension ride height is fixed and should be 6 1/2 inches ± 1/16 (165.1 ± 1.6 mm) between bottom of cab mounting plate and top of crossmember mounting plate (Figure 176). If dimension does not meet specified height of 6 1/2 inches ± 1/16 (165.1 ± 1.6 mm) for cab air suspension, adjust as necessary using the following procedure.

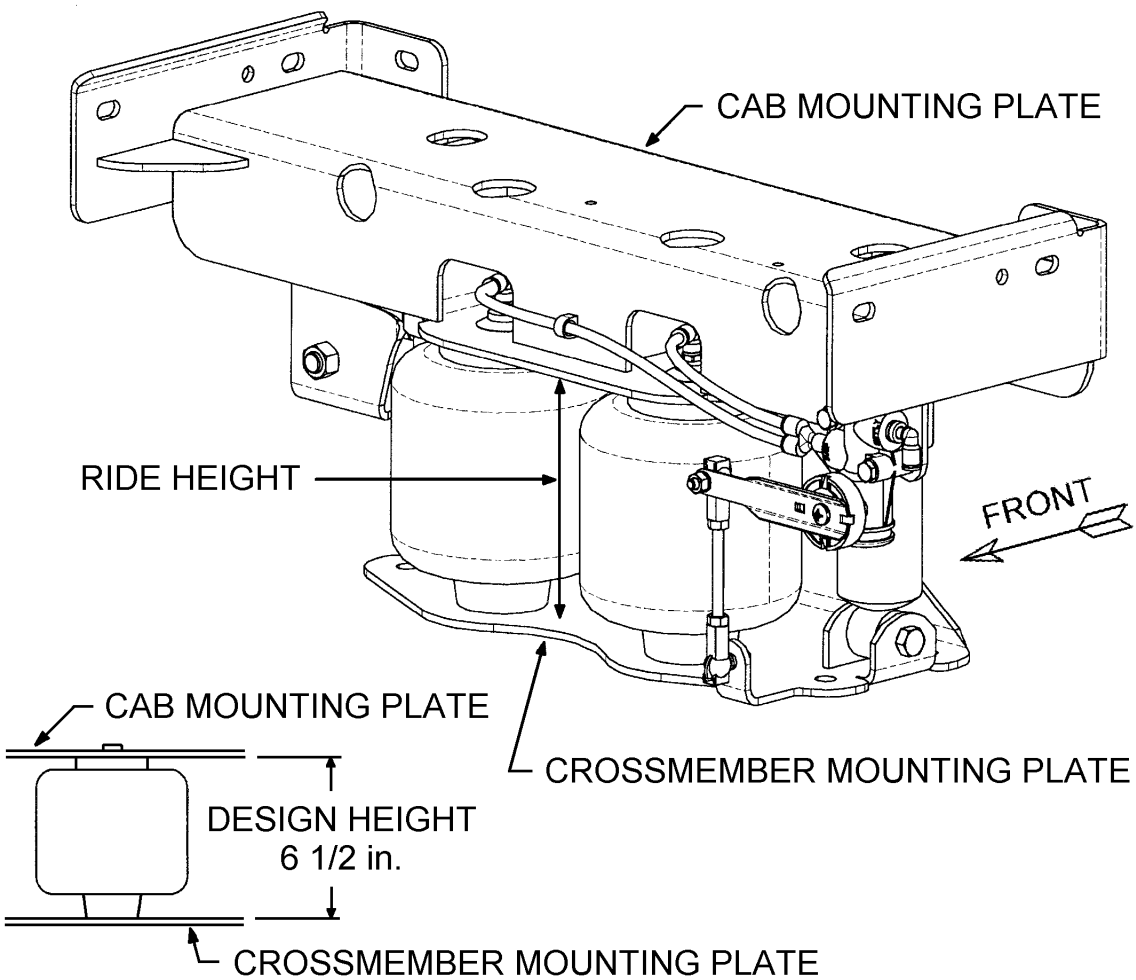

Figure 176 Cab Height Measuring Points for 9200*i*, 9400*i* and 9900*i* models with Pro-Sleeper® before April 2000

1. Have air system fully charged.

Refer to Figure 177 for Items in parentheses.

2. Remove one end of height control valve linkage (Item 4) from threaded ball pivot (Item 2, Figure 114) (See Figure 114, page 172) by unlatching linkage clip and carefully pry the height control valve linkage socket from threaded ball pivot.

3. Loosen one of the jam nuts (Item 7) and back off the nut several turns.

4. Turn the height control valve linkage (Item 4) clockwise to shorten the linkage or counterclockwise to lengthen the linkage to adjust the linkage properly.

IMPORTANT – There must be a minimum of 5 full threads engaged between the threaded rod and the linkage socket. If a longer valve linkage is required, contact Link Manufacturing customer service for assistance.

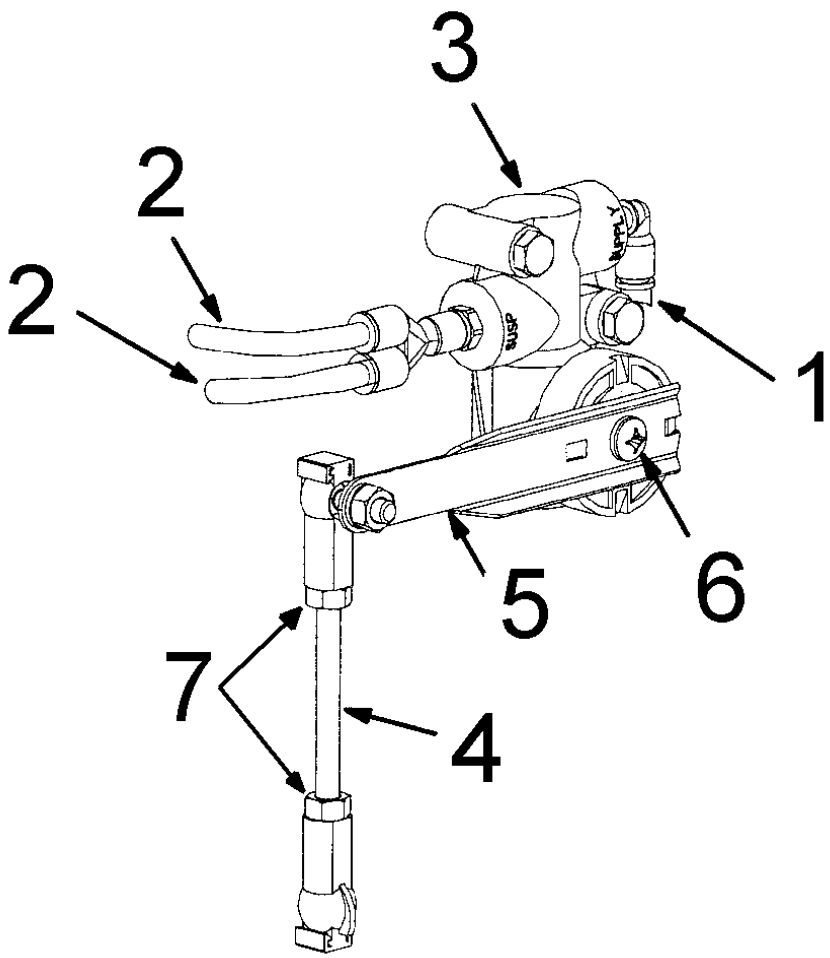

Figure 177 Cab Air Suspension Height Control for 9200*i*, 9400*i* and 9900*i* models with Pro-Sleeper® before April 2000

1. AIR LINE (SUPPLY)
2. AIR LINE (TO AIR SPRING)
3. HEIGHT CONTROL VALVE
4. HEIGHT CONTROL VALVE LINKAGE
5. HEIGHT CONTROL VALVE ARM
6. PAN HEAD SCREW, 1/4–15 X 1/2
7. JAM NUT

5. Reconnect height control valve linkage (Item 4) onto threaded ball pivot (Item 2, Figure 114) (See Figure 114, page 172) by positioning the height control valve linkage socket over threaded ball pivot and pushing linkage socket onto threaded ball pivot until it snaps in place.

6. Re-measure the cab ride height, if necessary, continue to make adjustments until proper cab ride height is obtained.

7. When the height control valve linkage (Item 4) is properly adjusted, latch the linkage clip and tighten jam nut (Item 7). Tighten to Hand tight + 1/8 turn.

8.9. CAB AIR SUSPENSION SYSTEM FOR 9200*I*/9400*I*/9900*I* MODELS WITH PRO-SLEEPER® AFTER APRIL 2000

Cab air suspension system for 9200*i*, 9400*i* and 9900*i* models with Pro-Sleeper® is set at the factory and should not need adjustment. Cab air suspension ride height is fixed and should be 6 1/2 inches ± 1/16 (165.1 ± 1.6 mm) between bottom of cab mounting plate and top of crossmember mounting plate (Figure 178). If dimension does not meet specified height of 6 1/2 inches ± 1/16 (165.1 ± 1.6 mm) for cab air suspension, adjust as necessary using the following procedure.

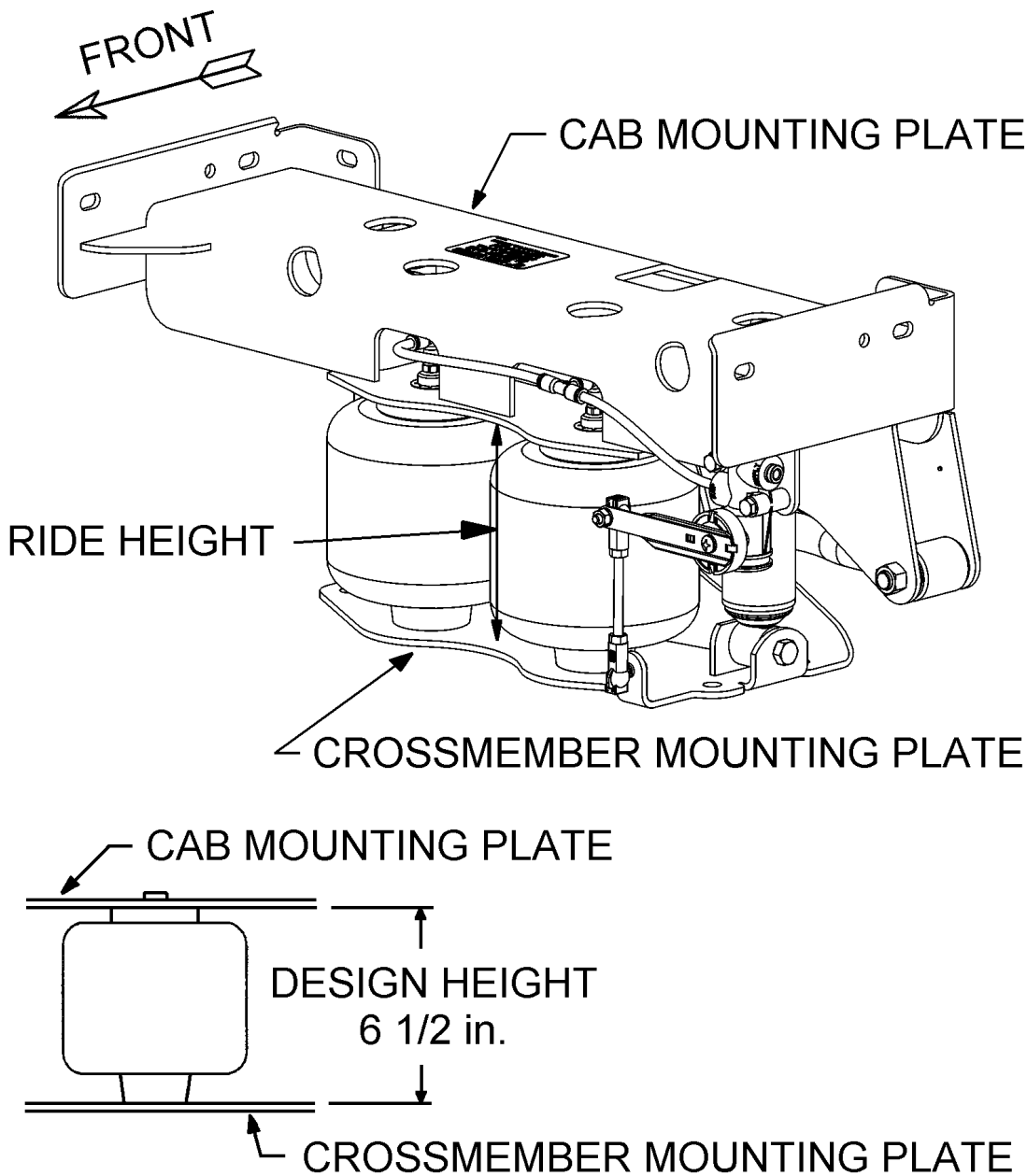

Figure 178 Cab Height Measuring Points for Cab air suspension system for 9200*i*, 9400*i* and 9900*i* models with Pro-Sleeper® after April 2000

1. Have air system fully charged.

Refer to Figure 179 for Items in parentheses.

2. Remove one end of height control valve linkage (Item 4) from threaded ball pivot (Item 2, Figure 116) (See Figure 116, page 177) by unlatching linkage clip and carefully pry the height control valve linkage socket from threaded ball pivot.

3. Loosen one of the jam nuts (Item 7) and back off the nut several turns.

4. Turn the height control valve linkage (Item 4) clockwise to shorten the linkage or counterclockwise to lengthen the linkage to adjust the linkage properly.

IMPORTANT – There must be a minimum of 5 full threads engaged between the threaded rod and the linkage socket. If a longer valve linkage is required, contact Link Manufacturing customer service for assistance.

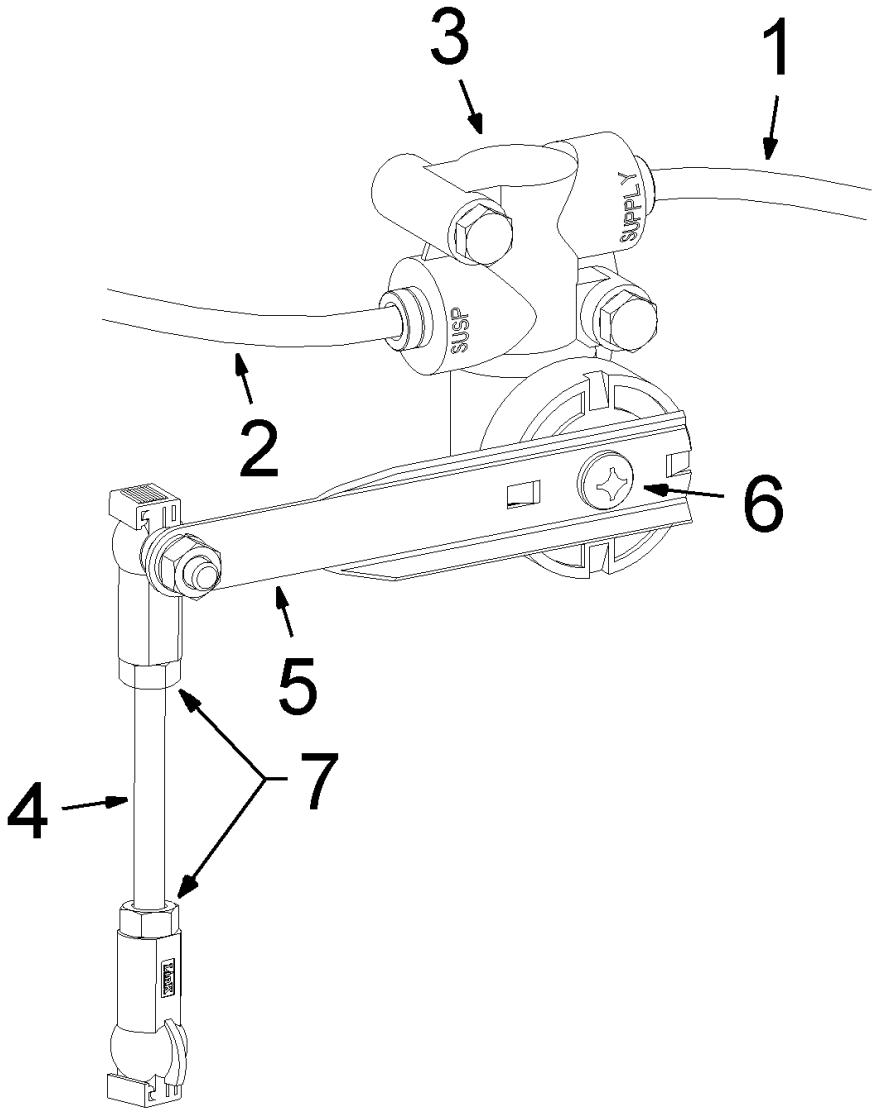

Figure 179 Cab Air Suspension Height Control for 9200*i*, 9400*i* and 9900*i* models with Pro-Sleeper® after April 2000

1. AIR LINE (SUPPLY)
2. AIR LINE (TO AIR SPRING)
3. HEIGHT CONTROL VALVE
4. HEIGHT CONTROL VALVE LINKAGE
5. HEIGHT CONTROL VALVE ARM
6. PAN HEAD SCREW, 1/4–15 X 1/2
7. JAM NUT

5. Reconnect height control valve linkage (Item 4) onto threaded ball pivot (Item 2, Figure 116) (See Figure 116, page 177) by positioning the height control valve linkage socket over threaded ball pivot and pushing linkage socket onto threaded ball pivot until it snaps in place.

6. Re-measure the cab ride height, if necessary, continue to make adjustments until proper cab ride height is obtained.

7. When the height control valve linkage (Item 4) is properly adjusted, latch the linkage clip and tighten jam nut (Item 7). Tighten to Hand tight + 1/8 turn.

8.10. CAB AIR SUSPENSION SYSTEM FOR 5000*I* SERIES BEFORE SEPTEMBER 1997

To adjust cab ride height, measure ride height from top of air springs (bags) to bottom of air springs (bags) between left and right cab mount plates and suspension crossmember bracket (Figure 180). If dimension does not meet specified height of 4 1/2 inches ± 1/16 (114.3 ± 1.6 mm), adjust as necessary using the following procedure.

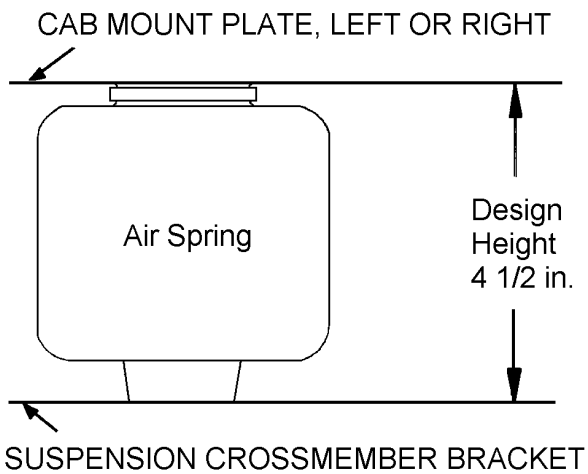

Figure 180 Cab Height Measuring Points for Cab Air Suspension System for 5000*i* Series before September 1997

1. Have air system fully charged.

Refer to Figure 181 for Items in parentheses.

2. Remove one end of height control valve linkage (Item 1) from threaded ball pivot (Item 23, Figure 118) (See Figure 118, page 182) by unlatching linkage clip and carefully pry the height control valve linkage socket from threaded ball pivot.

3. Loosen one of the jam nuts (Item 2) and back off the nut several turns.

4. Turn the height control valve linkage (Item 1) clockwise to shorten the linkage or counterclockwise to lengthen the linkage to adjust the linkage properly.

IMPORTANT – There must be a minimum of 5 full threads engaged between the threaded rod and the linkage socket. If a longer valve linkage is required, contact Link Manufacturing customer service for assistance.

5. Height control valve arm (Item 3) has a slot (Item 4) which will allow for course adjustment also.

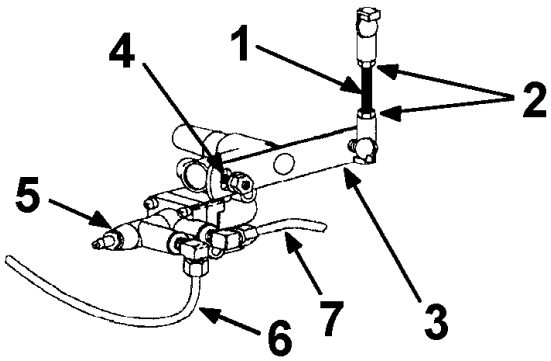

Figure 181 Cab Air Suspension Height Control for Cab Air Suspension System for 5000*i* Series before September 1997

1. HEIGHT CONTROL VALVE LINKAGE
2. JAM NUT
3. HEIGHT CONTROL VALVE ARM
4. SLOT FOR COARSE ADJUSTMENT
5. HEIGHT CONTROL VALVE
6. AIR LINE (SUPPLY)
7. AIR LINE (TO AIR SPRING)

6. Reconnect height control valve linkage (Item 1) onto threaded ball pivot (Item 23, Figure 118) (See Figure 118, page 182) by positioning the height control valve linkage socket over threaded ball pivot and pushing linkage socket onto threaded ball pivot until it snaps in place.

7. Re-measure the cab ride height, if necessary, continue to make adjustments until proper cab ride height is obtained.

8. When the height control valve linkage (Item 1) is properly adjusted, latch the linkage clip and tighten jam nut (Item 2). Tighten to Hand tight + 1/8 turn.

8.11. CAB AIR SUSPENSION SYSTEM FOR 5000*I* SERIES AFTER SEPTEMBER 1997

To adjust cab ride height, measure ride height from top of air springs (bags) to bottom of air springs (bags) between left and right cab mount plates and suspension crossmember bracket (Figure 180) (See Figure 180, page 340). If dimension does not meet specified height of 4 1/2 inches ± 1/16 (114.3 ± 1.6 mm), adjust as necessary using the following procedure.

1. Have air system fully charged.

Refer to Figure 182 for Items in parentheses.

2. Remove one end of height control valve linkage (Item 4) from threaded ball pivot (Item 24, Figure 120) (See Figure 120, page 187) mounted to the cab mount plate (left) (Item 21, Figure 120) (See Figure 120, page 187) by unlatching linkage clip and carefully pry the height control valve linkage socket from threaded ball pivot.

3. Loosen one of the jam nuts (Item 6) and back off the nut several turns.

4. Turn the height control valve linkage (Item 4) clockwise to shorten the linkage or counterclockwise to lengthen the linkage to adjust the linkage properly.

IMPORTANT – There must be a minimum of 5 full threads engaged between the threaded rod and the linkage socket. If a longer valve linkage is required, contact Link Manufacturing customer service for assistance.

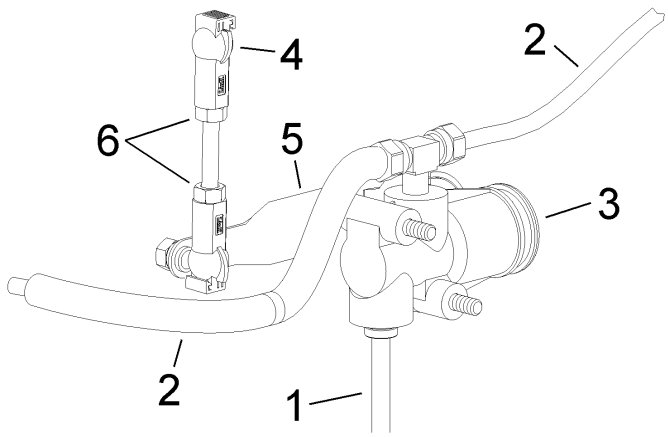

Figure 182 Cab Air Suspension Height Control for Cab Air Suspension System for 5000*i* Series after February 2001

1. AIR LINE (SUPPLY)
2. AIR LINE (TO AIR SPRING)
3. HEIGHT CONTROL VALVE
4. HEIGHT CONTROL VALVE LINKAGE
5. HEIGHT CONTROL VALVE ARM
6. JAM NUT

5. Reconnect height control valve linkage (Item 4) onto threaded ball pivot (Item 24, Figure 120) (See Figure 120, page 187) mounted to the cab mount plate (left) (Item 21, Figure 120) (See Figure 120, page 187) by positioning the height control valve linkage socket over threaded ball pivot and pushing linkage socket onto threaded ball pivot until it snaps in place.

6. Re-measure the cab ride height, if necessary, continue to make adjustments until proper cab ride height is obtained.

7. When the height control valve linkage (Item 4) is properly adjusted, latch the linkage clip and tighten jam nut (Item 6). Tighten to Hand tight + 1/8 turn.

8.12. CAB AIR SUSPENSION SYSTEM FOR 5000*I* SERIES AFTER FEBRUARY 2001

To adjust cab ride height, measure ride height from top of air springs (bags) to bottom of air springs (bags) between cab mounting bracket and suspension crossmember bracket (Figure 180) (See Figure 180, page 340). If dimension does not meet specified height of 4 1/2 inches ± 1/16 (114.3 ± 1.6 mm), adjust as necessary using the following procedure.

1. Have air system fully charged.

Refer to Figure 182 (See Figure 182, page 342) for Items in parentheses.

2. Remove one end of height control valve linkage (Item 4) from threaded ball pivot (Item 24, Figure 122) (See Figure 122, page 193) mounted to the cab mount plate (left) (Item 21, Figure 122) (See Figure

122, page 193) by unlatching linkage clip and carefully pry the height control valve linkage socket from threaded ball pivot.

3. Loosen one end of the jam nuts (Item 6) and back off the nut several turns.

4. Turn the height control valve linkage (Item 4) clockwise to shorten the linkage or counterclockwise to lengthen the linkage to adjust the linkage properly.

IMPORTANT – There must be a minimum of 5 full threads engaged between the threaded rod and the linkage socket. If a longer valve linkage is required, contact Link Manufacturing customer service for assistance.

5. Reconnect height control valve linkage (Item 4) onto threaded ball pivot (Item 24, Figure 122) (See Figure 122, page 193) mounted to the cab mount plate (left) (Item 21, Figure 122) (See Figure 122, page 193) by positioning the height control valve linkage socket over threaded ball pivot and pushing linkage socket onto threaded ball pivot until it snaps in place.

6. Re-measure the cab ride height, if necessary, continue to make adjustments until proper cab ride height is obtained.

7. When the height control valve linkage (Item 4) is properly adjusted, latch the linkage clip and tighten jam nut (Item 6). Tighten to Hand tight + 1/8 turn.

8.13. HOOD

To adjust the hood for SFA and SBA 5000*i* series with fiberglass tilt hoods and 9000*i* series vehicles, refer to **GROUP 09 – HOOD, GRILLE, AND FENDERS** in the **Master Service Manual**.

8.14. CAB DOOR HINGE

Mounting holes in the cab hinge pillar are oversize to permit adjustment of the door to the opening.

8.15. CAB DOOR STRIKER PIN AT LOCK PILLAR

Refer to Figure 77 (See Figure 77, page 88) for Items in parentheses.

1. Use a torx head tool (Item 3) and loosen cab door striker pin (Item 1) to move striker pin up or down and forward or back as required.

2. In and out adjustment of cab door striker pin (Item 1) is done with spacer shims (Item 4) between cab door striker pin and cab lock pillar (Item 2). Use a torx head tool (Item 3) and remove cab door striker pin and add or remove spacer shims as required and reinstall.

3. Make final adjustment of cab door striker pin (Item 1) and using a torx head tool (Item 3) tighten to 34 to 50 Lbf-ft (46 to 68 N•m).

8.16. WINDSHIELD WIPER ARM AND BLADE ASSEMBLY

To check wiper pattern on the windshield turn wipers on to high speed, make sure wipers do not run off the glass or go below horizontal position to bottom edge of glass. To adjust wiper arm and blade assembly use the following procedure.

NOTE – Water sprayed on windshield may help to determine wiper pattern.

Refer to Figure 81 (See Figure 81, page 93) for Items in parentheses.

1. If driver or passenger side windshield wiper arm and blade assemblies need adjustment to get the proper wiper pattern, lift windshield wiper arm and blade assembly (Item 3) off spline by lifting windshield wiper arm slide lever (Item 4) and lift windshield wiper arm and blade assembly off spline.

2. Position windshield wiper arm and blade assembly (Item 3) at spline with wiper blade horizontal to bottom edge of windshield and lift windshield wiper arm slide lever (Item 4) and push windshield wiper arm and blade assembly down onto spline, windshield wiper arm slide lever will lock windshield wiper arm and blade assembly into place once it is pushed all the way down.

3. Turn wipers on to high speed and check for proper operation.

9. FORMS

9.1. BONDED WINDSHIELD REPLACEMENT REPORT

This self-carboning form Figure 183 (See Figure 183, page 345), MUST be filled out and gone over with the customer before starting windshield replacement.

INTERNATIONAL®

Bonded Windshield Replacement Report

Date: Repair Order #:

Customer Name:

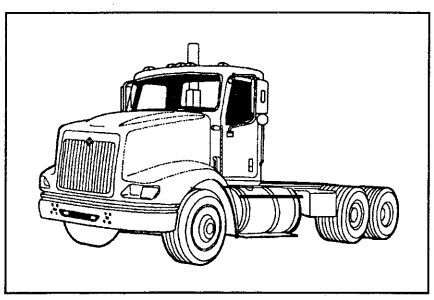

Pre-Installation Inspection

☐ No apparent body damage

☐ Prior vehicle body damage:
Dent / Scratch / Interior

☐ Rust

☐ Not applicable; body repair required or in progress at body shop

Other:

Important!
You are advised that for your own safety and the safety of any passengers, your vehicle should not be driven until:_____ AM / PM
So that adhesive has sufficient time to cure completely.

Remember; always wear your seat belts.

ESSEX BETASEAL
U-216
Affix Seal
Technician White
Insurance Yellow

Primer Lot Numbers

U401
U402
U413
Other

Urethane Lot Numbers:

U216A
U216B
U400HV (If Necessary)

If used, U400HV requires the following: (Refer to U400HV application chart for extended cure times)

Time:	
Temp:	°F / C
Humidity:	%RH

Final Walk-around Checklist (Circle One):

Pass	Fail	Not Applicable	
P	F	NA	Vehicle/Area Cleaned
P	F	NA	Wiper Test
P	F	NA	Washer Test
P	F	NA	Defroster Test
P	F	NA	Interior Trim Secure

Comments:

Met with customer in person:

Before work performed:	Y	N
After work performed:	Y	N

Technician Certification:
I hereby certify that this installation has been completed in accordance with and in support of International® guidelines.

Signature:

Date:

White Dealer Copy / Yellow Customer Copy

Figure 183 INTERNATIONAL® FORM-Bonded Windshield Replacement Report

10. TORQUE

10.1. TORQUE CHART

Table 4

Item No.*	Location	Lbs-in/ft	N•m
3	Seat Mounting Bolt (Figure 29) (See Figure 29, page 30)	23 to 27 Lbf-ft	31 to 37
2, 3	Seat Mounting Bolt (Figure 30) (See Figure 30, page 31)	23 to 27 Lbf-ft	31 to 37
None	Seat Belt Bracket to Seat, Bolts and Nuts (Reference step 3, Section 4.11)(Figure 32) (See Figure 32, page 33)	25 to 35 Lbf-ft	34 to 47
2	Seat Belt D-Ring to Cab wall, Shoulder Bolt (Figure 32) (See Figure 32, page 33)	25 to 35 Lbf-ft	34 to 47
6	Cab Door Hinge to Cab Door, Hex Flanged Head Bolts (Figure 53) (See Figure 53, page 56)	180 Lbf-in	20
9	Cab Door Hinge to Cab Hinge Pillar, Hex Flanged Head Bolts (Figure 53) (See Figure 53, page 56)	180 Lbf-in	20
6	Cab Door Hinge to Cab Door, Hex Flanged Head Bolts (Figure 54) (See Figure 54, page 58)	180 Lbf-in	20
9	Cab Door Hinge to Cab Hinge Pillar, Hex Flanged Head Bolts (Figure 54) (See Figure 54, page 58)	180 Lbf-in	20
1	Cab Door Striker Pin on Cab Lock Pillar (Figure 77) (See Figure 77, page 88)	34 to 50 Lbf-ft	46 to 68
1	Windshield Wiper Motor, Bracket and Linkage Assembly to Cowl Mounting Studs, Hex Lock Nuts (Figure 87) (See Figure 87, page 101)	155 to 190 Lbf-in	17.5 to 21.5
1	Windshield Wiper Motor, Bracket and Linkage Assembly to Cowl Mounting Studs, Hex Lock Nuts (Figure 88) (See Figure 88, page 103)	155 to 190 Lbf-in	17.5 to 21.5
1	Windshield Wiper Motor, Bracket and Linkage Assembly to Cowl Mounting Studs, Hex Lock Nuts (Figure 89) (See Figure 89, page 105)	155 to 190 Lbf-in	17.5 to 21.5
6	Wiper Motor Pivot Arm to Motor Shaft, Hex Lock Nut (Figure 90) (See Figure 90, page 107)	180 to 220 Lbf-in	20.3 to 24.9
7	Windshield Wiper Motor to Windshield Wiper Motor, Bracket and Linkage Assembly, Hex Bolts(Figure 90) (See Figure 90, page 107)	92 to 110 Lbf-in	10.4 to 12.4

Item No.*	Location	Lbs-in/ft	N•m
2	Wiper Motor Pivot Arm to Motor Shaft, Hex Flanged Lock Nut (Figure 91) (See Figure 91, page 109)	180 to 220 Lbf-in	20.3 to 24.9
5	Windshield Wiper Motor to Windshield Wiper Motor Mounting Bracket, Hex Flanged Head Bolts(Figure 91) (See Figure 91, page 109)	92 to 110 Lbf-in	10.4 to 12.4
6	Windshield Wiper Motor Mounting Bracket to Windshield Wiper Motor, Bracket and Linkage Assembly, Hex Flanged Head Bolts(Figure 91) (See Figure 91, page 109)	92 to 110 Lbf-in	10.4 to 12.4
4	Windshield Wiper Motor to Windshield Wiper Motor Mounting Bracket, Hex Flanged Head Bolts(Figure 92) (See Figure 92, page 111)	92 to 110 Lbf-in	10.4 to 12.4
1, 2	Chassis Front Cab Mounting Bracket to Front Cab Mounting Bracket, Hex Flanged Bolt and Hex Flanged Lock Nut (Figure 94) (See Figure 94, page 115)	200 to 240 Lbf-ft	270 to 325
5, 10	Rear Cab Mounting Bracket, Upper to Lower, Hex Head Bolts and Hex Lock Nuts (Figure 94) (See Figure 94, page 115)	Tighten bolt until top washer is flush with top of sill	
17	Lower Rear Cab Mounting Bracket to Crossmember, Hex Flanged Head Bolts and Hex Flanged Lock Nuts (Figure 94) (See Figure 94, page 115)	100 to 120 Lbf-ft	136 to 163
19	Upper Rear Cab Mounting Bracket to Back of Cab, Hex Bolts (Figure 94) (See Figure 94, page 115)	30 to 38 Lbf-ft	41 to 51
20	Chassis Front Cab Mounting Bracket to Frame Rail, Hex Flanged Head Bolts and Hex Flanged Lock Nuts (Figure 94) (See Figure 94, page 115)	70 to 85 Lbf-ft	95 to 115
1, 4	Front Cab Mounting Bracket to Chassis Front Mounting Bracket, Hex Head Bolt and Hex Lock Nut (Figure 95) (See Figure 95, page 117)	185 to 200 Lbf-ft	251 to 271
17, 18	Front Cab Mounting Insulator to Chassis Front Cab Mounting Bracket, Hex Flanged Head Bolts and Hex Flanged Lock Nuts (Figure 95) (See Figure 95, page 117)	115 to 140 Lbf-in	13 to 16
1, 4	Front Cab Mounting Bracket to Chassis Front Mounting Bracket, Hex Head Bolt and Hex Lock Nut (Figure 96) (See Figure 96, page 120)	185 to 200 Lbf-ft	251 to 271

Item No.*	Location	Lbs-in/ft	N•m
7	Cab Floor and Cab Air Suspension Bracket Mounting Plate to Rear Cab Crossmember Support/Cab Air Suspension, Hex Bolts and Flanged Hex Lock Nuts (Figure 96) (See Figure 96, page 120)	70 to 80 Lbf-ft	95 to 108.5
15, 16	Front Cab Mounting Insulator to Chassis Front Cab Mounting Bracket, Hex Flanged Head Bolts and Hex Flanged Lock Nuts (Figure 96) (See Figure 96, page 120)	115 to 140 Lbf-in	13 to 16
1, 5	Front Cab Mounting Bracket to Chassis Front Mounting Bracket, Hex Head Bolt and Hex Lock Nut (Figure 97) (See Figure 97, page 122)	145 to 175 Lbf-ft	197 to 237
8, 14	Rear Cab Mounting Bracket, Upper to Lower, Hex Head Bolts and Hex Flanged Lock Nuts (Figure 97) (See Figure 97, page 122)	Tighten bolt until top washer is flush with top of sill	
19, 20	Front Cab Mounting Insulator to Chassis Front Cab Mounting Bracket, Hex Flanged Head Bolts and Hex Flanged Lock Nuts (Figure 97) (See Figure 97, page 122)	115 to 140 Lbf-in	13 to 16
21	Upper Rear Cab Mounting Bracket to Back of Cab, Hex Bolts (Figure 97) (See Figure 97, page 122)	30 to 38 Lbf-ft	41 to 51
22	Lower Rear Cab Mounting Bracket to Chassis Crossmember, Hex Bolts and Hex Lock Nuts (Figure 97) (See Figure 97, page 122)	30 to 38 Lbf-ft	41 to 51
None	Chassis Front Cab Mounting Bracket to Frame Rail, Mounting Bolts and Nuts (Figure 97) (See Figure 97, page 122)	115 to 140 Lbf-in	13 to 16
1, 5	Front Cab Mounting Bracket to Chassis Front Mounting Bracket, Hex Head Bolt and Hex Lock Nut (Figure 98) (See Figure 98, page 125)	185 to 200 Lbf-ft	251 to 271
8	Cab Floor and Rear Cab Sill Bracket into Weld Nuts of Cab Air Suspension, Hex Flanged Head Bolts (Figure 98) (See Figure 98, page 125)	70 to 80 Lbf-ft	95 to 108.5
14, 15	Front Cab Mounting Insulator to Chassis Front Cab Mounting Bracket, Hex Flanged Head Bolts and Hex Flanged Lock Nuts (Figure 98) (See Figure 98, page 125)	115 to 140 Lbf-in	13 to 16
1, 5	Front Cab Mounting Bracket to Chassis Front Mounting Bracket, Hex Head Bolt and Hex Lock Nut (Figure 99) (See Figure 99, page 128)	185 to 200 Lbf-ft	251 to 271

Item No.*	Location	Lbs-in/ft	N•m
8	Cab Floor and Rear Cab Sill Bracket into Weld Nuts of Cab Air Suspension, Hex Flanged Head Bolts (Figure 99) (See Figure 99, page 128)	70 to 80 Lbf-ft	95 to 108.5
14, 15	Front Cab Mounting Insulator to Chassis Front Cab Mounting Bracket, Hex Flanged Head Bolts and Hex Flanged Lock Nuts (Figure 99) (See Figure 99, page 128)	115 to 140 Lbf-in	13 to 16
1, 5	Front Cab Mounting Bracket to Chassis Front Mounting Bracket, Hex Head Bolt and Hex Lock Nut (Figure 100) (See Figure 100, page 131)	185 to 200 Lbf-ft	251 to 271
8	Cab Floor and Rear Cab Sill Bracket into Weld Nuts of Cab Air Suspension, Hex Flanged Head Bolts (Figure 100) (See Figure 100, page 131)	70 to 80 Lbf-ft	95 to 108.5
14, 15	Front Cab Mounting Insulator to Chassis Front Cab Mounting Bracket, Hex Flanged Head Bolts and Hex Flanged Lock Nuts (Figure 100) (See Figure 100, page 131)	115 to 140 Lbf-in	13 to 16
1, 5	Front Cab Mounting Bracket to Chassis Front Mounting Bracket, Hex Head Bolt and Hex Lock Nut (Figure 101) (See Figure 101, page 134)	185 to 200 Lbf-ft	251 to 271
8	Cab Floor and Rear Cab Sill Bracket into Weld Nuts of Cab Air Suspension, Hex Flanged Head Bolts (Figure 101) (See Figure 101, page 134)	70 to 80 Lbf-ft	95 to 108.5
14, 15	Front Cab Mounting Insulator to Chassis Front Cab Mounting Bracket, Hex Flanged Head Bolts and Hex Flanged Lock Nuts (Figure 101) (See Figure 101, page 134)	115 to 140 Lbf-in	13 to 16
1, 5	Front Cab Mounting Bracket to Chassis Front Mounting Bracket, Hex Head Bolt and Hex Lock Nut (Figure 102) (See Figure 102, page 137)	185 to 200 Lbf-ft	251 to 271
8	Cab Floor and Rear Cab Sill Bracket into Weld Nuts of Cab Air Suspension, Hex Head Bolts (Figure 102) (See Figure 102, page 137)	70 to 80 Lbf-ft	95 to 108.5
13, 14	Front Cab Mounting Insulator to Chassis Front Cab Mounting Bracket, Hex Flanged Head Bolts and Hex Flanged Lock Nuts (Figure 102) (See Figure 102, page 137)	115 to 140 Lbf-in	13 to 16

Item No.*	Location	Lbs-in/ft	N•m
1, 5	Front Cab Mounting Bracket to Chassis Front Mounting Bracket, Hex Head Bolt and Hex Lock Nut (Figure 103) (See Figure 103, page 140)	185 to 200 Lbf-ft	251 to 271
8	Cab Floor and Rear Cab Sill Bracket into Weld Nuts of Cab Air Suspension, Hex Flanged Head Screw Sems Assemblies(Figure 103) (See Figure 103, page 140)	70 to 80 Lbf-ft	95 to 108.5
12, 13	Front Cab Mounting Insulator to Chassis Front Cab Mounting Bracket, Hex Flanged Head Bolts and Hex Flanged Lock Nuts (Figure 103) (See Figure 103, page 140)	115 to 140 Lbf-in	13 to 16
1, 5	Front Cab Mounting Bracket to Chassis Front Mounting Bracket, Hex Head Bolt and Hex Lock Nut (Figure 104) (See Figure 104, page 143)	185 to 200 Lbf-ft	251 to 271
8	Cab Floor and Rear Cab Sill Bracket into Weld Nuts of Cab Air Suspension, Hex Flanged Head Screw Sems Assemblies(Figure 104) (See Figure 104, page 143)	70 to 80 Lbf-ft	95 to 108.5
12, 13	Front Cab Mounting Insulator to Chassis Front Cab Mounting Bracket, Hex Flanged Head Bolts and Hex Flanged Lock Nuts (Figure 104) (See Figure 104, page 143)	115 to 140 Lbf-in	13 to 16
5	Nylon Air Line (to air spring) into Push to Connect Elbow Fitting (Item 6) at bottom of Passenger Side Air Spring (Bag),(Figure 105) (See Figure 105, page 145)	Securely press into Push to Connect Elbow Fitting at bottom of passenger side air spring (Bag) until it bottoms. Push twice to verify the air line is inserted past the collet and O-ring. Pull on air line to verify it is fully inserted.	
5	Nylon Air Line (to air spring) into Push to Connect Elbow Fitting (Item 7) at bottom of Cab Air Ride Valve Assembly,(Figure 105) (See Figure 105, page 145)	Securely press into Push to Connect Elbow Fitting at bottom of cab air ride valve assembly until it bottoms. Push twice to verify the air line is inserted past the collet and O-ring. Pull on air line to verify it is fully inserted.	

Item No.*	Location	Lbs-in/ft	N•m
5	Nylon Air Lines (to air spring) into both sides of Push to Connect Tee Fitting (Item 8) at bottom of Driver Side Air Spring (Bag),(Figure 105) (See Figure 105, page 145)	Securely press into Push to Connect Tee Fitting at bottom of driver side air spring (Bag) until it bottoms. Push twice to verify the air line is inserted past the collet and O-ring. Pull on air line to verify it is fully inserted.	
6	Push to Connect Elbow Fitting into bottom of Passenger Side Air Spring (Bag) (Figure 105) (See Figure 105, page 145)	Securely press into passenger side air spring (Bag) until it bottoms. Push twice to verify the air line is inserted past the collet and O-ring. Pull on air line to verify it is fully inserted.	
7	Push to Connect Elbow Fitting into bottom of Cab Air Ride Valve Assembly,(Figure 105) (See Figure 105, page 145)	Securely press into Cab Air Ride Valve Assembly until it bottoms. Push twice to verify the air line is inserted past the collet and O-ring. Pull on air line to verify it is fully inserted.	
8	Push to Connect Tee Fitting into bottom of Driver Side Air Spring (Bag) (Figure 105) (See Figure 105, page 145)	Securely press into driver side air spring (Bag) until it bottoms. Push twice to verify the air line is inserted past the collet and O-ring. Pull on air line to verify it is fully inserted.	
10	Shock Absorber (Item 2) Top and Bottom Mounting, Hex Flanged Head Screw Sems Assemblies (Figure 105) (See Figure 105, page 145)	155 to 190 Lbf-in	17 to 21
10	Shock Absorber (Item 3) Top Mounting, Hex Flanged Head Screw Sems Assemblies (Figure 105) (See Figure 105, page 145)	155 to 190 Lbf-in	17 to 21
11	Shock Absorber (Item 3) Bottom Mounting, Hex Flanged Lock Nut (Figure 105) (See Figure 105, page 145)	10 to 15 Lbf-ft	14 to 20
19, 20	Track Bar Rod to Track Bar Rod Mount Bracket, Hex Flanged Head Bolt and Hex Flanged Lock Nut (Figure 105) (See Figure 105, page 145)	100 to 120 Lbf-ft	136 to 163
21, 22	Track Bar Rod to Track Bar Rod Mount of Air Suspension Upper Mounting Plate, Hex Flanged Head Bolt and Hex Flanged Lock Nut (Figure 105) (See Figure 105, page 145)	100 to 120 Lbf-ft	136 to 163

Item No.*	Location	Lbs-in/ft	N•m
23, 25	Cab Air Ride Valve Mounting, Hex Head Bolts and Hex Lock Nuts (Figure 105) (See Figure 105, page 145)	8 to 10 Lbf-ft	11 to 14
1	Air Line (supply) into Push to Connect Elbow Fitting of Cab Air Ride Valve(Figure 107) (See Figure 107, page 150)	Securely press into Push to Connect Elbow Fitting of Cab Air Ride Valve until it bottoms. Push twice to verify the air line is inserted past the collet and O-ring. Pull on air line to verify it is fully inserted.	
8	Push to Connect Elbow Fitting into Cab Air Ride Valve, (Figure 107) (See Figure 107, page 150)	Securely press into Cab Air Ride Valve until it bottoms. Push twice to verify the air line is inserted past the collet and O-ring. Pull on air line to verify it is fully inserted.	
10, 12	Cab Air Ride Valve Mounting, Hex Head Bolts and Hex Lock Nuts (Figure 107) (See Figure 107, page 150)	8 to 10 Lbf-ft	11 to 14
12	Hex Nipple Fitting into top of Air Spring (Bag) (Figure 108) (See Figure 108, page 152)	Hand tight plus 270 Degrees to 450 Degrees	
13	Elbow Fitting onto Hex Nipple Fitting (Figure 108) (See Figure 108, page 152)	Hand tight plus 270 Degrees to 450 Degrees	
14	Air Line (to air spring) into Compression Nut of Elbow Fitting at the top of Air Spring (Bag) (Figure 108) (See Figure 108, page 152)	Push the air line securely into elbow fitting compression nut. Hand tight 450 Degrees to 630 Degrees	
14	Air Line (to air spring) into Compression Nut of Elbow Fitting in “SUSP” Port of Height Control Valve (Figure 108) (See Figure 108, page 152)	Push the air line securely into elbow fitting compression nut. Hand tight plus 270 Degrees to 450 Degrees	
15, 16	Height Control Valve Mounting, Hex Head Bolts and Hex Lock Nuts (Figure 108) (See Figure 108, page 152)	8 to 10 Lbf-ft	11 to 14
17, 19	Rubber Bumper Mounting, Hex Head Bolt and Hex Lock Nut (Figure 108) (See Figure 108, page 152)	8 to 10 Lbf-ft	11 to 14
18, 20	Shock Absorber (Item 6) Top and Bottom Mounting, Hex Head Bolts and Hex Lock Nuts (Figure 108) (See Figure 108, page 152)	40 to 50 Lbf-ft	54 to 68
18, 20	Shock Absorber (Item 7) Top and Bottom Mounting, Hex Head Bolts and Hex Lock Nuts (Figure 108) (See Figure 108, page 152)	40 to 50 Lbf-ft	54 to 68

Item No.*	Location	Lbs-in/ft	N•m
21	Top of Air Spring (Bag) to Cab Mounting Plate, Hex Head Bolt (Figure 108) (See Figure 108, page 152)	2 to 4 Lbf-ft	3 to 5
22	Bottom of Air Spring (Bag) to Crossmember Mounting Plate, Socket Countersunk Flat Head Screw(Figure 108) (See Figure 108, page 152)	2 to 4 Lbf-ft	3 to 5
24, 25	Lateral Control Rod to Lateral Control Rod Mount of Cab Mounting Plate (Item 1), Hex Head Bolt and Hex Lock Nut (Figure 108) (See Figure 108, page 152)	40 to 45 Lbf-ft	54 to 61
24, 25	Lateral Control Rod to Lateral Control Rod Mount of Crossmember Mounting Plate (Item 3), Hex Head Bolt and Hex Lock Nut (Figure 108) (See Figure 108, page 152)	40 to 45 Lbf-ft	54 to 61
26	Elbow Fitting into “SUSP” Port of Height Control Valve(Figure 108) (See Figure 108, page 152)	Hand tight plus 270 Degrees to 450 Degrees	
27, 28	Cab Spacer Bracket to Air Suspension Upper Mounting Plate, Hex Flanged Head Bolt and Hex Flanged Lock Nut (Figure 108) (See Figure 108, page 152)	100 to 120 Lbf-ft	136 to 163
29	Air Suspension Upper Mounting Plate to Cab Spacer Bracket, Hex Flanged Head Bolt (Figure 108) (See Figure 108, page 152)	40 to 50 Lbf-ft	54 to 68
30	Height Control Valve Arm to Drive Bearing, Pan Head Bearing Screw (Figure 108) (See Figure 108, page 152)	40 to 50 Lbf-in	4.5 to 5.6
33	Threaded Ball Pivot Mounting, Hex Nut (Figure 108) (See Figure 108, page 152)	8 to 10 Lbf-ft	11 to 14
1, 2	Air Line (supply) into Compression Nut of Elbow Fitting in “SUPPLY” Port of Height Control Valve (Figure 109) (See Figure 109, page 155)	Push the air line securely into elbow fitting compression nut. Hand tight plus 270 Degrees to 450 Degrees	
3, 4	Air Line (to air spring) into Compression Nut of Elbow Fitting in “SUSP” Port of Height Control Valve (Figure 109) (See Figure 109, page 155)	Push the air line securely into elbow fitting compression nut. Hand tight plus 270 Degrees to 450 Degrees	
8	Height Control Valve Mounting, Hex Head Bolts and Hex Lock Nuts (Figure 109) (See Figure 109, page 155)	8 to 10 Lbf-ft	11 to 14
11	Height Control Valve Arm to Drive Bearing, Pan Head Bearing Screw (Figure 109) (See Figure 109, page 155)	40 to 50 Lbf-in	4.5 to 5.6

Item No.*	Location	Lbs-in/ft	N•m
13	Elbow Fitting into “SUPPLY” Port of Height Control Valve (Figure 109) (See Figure 109, page 155)	Hand tight plus 270 Degrees to 450 Degrees	
14	Elbow Fitting into “SUSP” Port of Height Control Valve(Figure 109) (See Figure 109, page 155)	Hand tight plus 270 Degrees to 450 Degrees	
14	Hex Nipple Fitting into top of Air Spring (Bag) (Figure 110) (See Figure 110, page 158)	Hand tight plus 270 Degrees to 450 Degrees	
15	Elbow Fitting onto Hex Nipple Fitting of air spring (Bag) (Figure 110) (See Figure 110, page 158)	Hand tight plus 270 Degrees to 450 Degrees	
16	Air Line (to air spring) into Compression Nut of Elbow Fitting at the top of Air Spring (Bag) (Figure 110) (See Figure 110, page 158)	Push the air line securely into elbow fitting compression nut. Hand tight plus 1 turn	
16	Air Line (to air spring) into Compression Nut of Elbow Fitting in SUSP Port of Height Control Valve (Figure 110) (See Figure 110, page 158)	Push the air line securely into elbow fitting compression nut. Hand tight plus 1 turn	
18, 19	Height Control Valve Mounting, Hex Head Bolts and Hex Lock Nuts (Figure 110) (See Figure 110, page 158)	8 to 10 Lbf-ft	11 to 14
20, 23	Rubber Bumper Mounting, Hex Head Bolt and Hex Lock Nut (Figure 110) (See Figure 110, page 158)	8 to 10 Lbf-ft	11 to 14
21, 24	Shock Absorber (Item 9) Top Mounting, Hex Flanged Head Bolts and Hex Flanged Lock Nuts (Figure 110) (See Figure 110, page 158)	45 Lbf-ft	61
21, 24	Shock Absorber (Item 8) Top Mounting, Hex Flanged Head Bolts and Hex Flanged Lock Nuts (Figure 110) (See Figure 110, page 158)	45 Lbf-ft	61
22, 24	Shock Absorber (Item 8) Bottom Mounting, Hex Flanged Head Bolts and Hex Flanged Lock Nuts (Figure 110) (See Figure 110, page 158)	45 Lbf-ft	61
25	Top of Air Spring (Bag) to Cab Mounting Plate, Hex Head Bolt (Figure 110) (See Figure 110, page 158)	2 to 4 Lbf-ft	3 to 5
26	Bottom of Air Spring (Bag) to Crossmember Mounting Plate, Mach. Screw (Figure 110) (See Figure 110, page 158)	2 to 4 Lbf-ft	3 to 5
27	Shock Absorber (Item 9) Bottom Mounting, Hex Lock Nut (Figure 110) (See Figure 110, page 158)	10 to 15 Lbf-ft	14 to 20

Item No.*	Location	Lbs-in/ft	N•m
29, 30	Lateral Control Rod to Lateral Control Rod Mount of Cab Mounting Plate (Item 1), Hex Head Bolt and Hex Lock Nut (Figure 110) (See Figure 110, page 158)	40 to 45 Lbf-ft	54 to 61
29, 30	Lateral Control Rod to Lateral Control Rod Mount of Crossmember Mounting Plate (Item 2), Hex Head Bolt and Hex Lock Nut (Figure 110) (See Figure 110, page 158)	40 to 45 Lbf-ft	54 to 61
31	Threaded Ball Pivot Mounting, Hex Nut (Figure 110) (See Figure 110, page 158)	8 to 10 Lbf-ft	11 to 14
7	Air Line (supply) into Push to Connect Elbow Fitting of Height Control Valve (Figure 111) (See Figure 111, page 160)	Securely press into Push to Connect elbow fitting in Supply Port of Height Control Valve Air Line until it bottoms. Push twice to verify the air line is inserted past the collet and O-ring. Pull on air line to verify it is fully inserted.	
8	Air Line (to air spring) into Compression Nut of Elbow fitting of Height Control Valve (Figure 111) (See Figure 111, page 160)	Push the air line securely into elbow fitting compression nut. Hand tight plus 1 turn	
11	Hex Nipple Fitting into Air Spring (Bag) (Figure 112) (See Figure 112, page 165)	Hand tight plus 270 Degrees to 450 Degrees	
12	Elbow Fitting onto Hex Nipple Fitting (Figure 112) (See Figure 112, page 165)	Hand tight plus 270 Degrees to 450 Degrees	
13	Air Line (to air spring) into Compression Nut of Elbow Fitting(Figure 112) (See Figure 112, page 165)	Push the air line securely into compression nut of elbow fitting. Hand tight plus 450 Degrees to 630 Degrees	
13	Air Line (to air spring) into “SUSP” port of Height Control Valve, Push to Connect (Figure 112) (See Figure 112, page 165)	Securely press into SUSP port of Height Control Vale until it bottoms. Push twice to verify the air line is inserted past the collet and O-ring. Pull on air line to verify it is fully inserted.	
14, 15	Height Control Valve Mounting, Carriage Bolts and Hex Lock Nuts (Figure 112) (See Figure 112, page 165)	8 to 10 Lbf-ft	11 to 14
18, 19	Shock Absorber (Item 5) Top and Bottom Mounting, Hex Head Bolts and Hex Lock Nuts (Figure 112) (See Figure 112, page 165)	45 Lbf-ft	61

Item No.*	Location	Lbs-in/ft	N•m
18, 19	Shock Absorber (Item 6) Top and Bottom Mounting, Hex Head Bolts and Hex Lock Nuts (Figure 112) (See Figure 112, page 165)	45 Lbf-ft	61
20	Bottom of Air Spring (Bag) to Crossmember Mounting Plate, Mach. Screw (Figure 112) (See Figure 112, page 165)	40 to 50 Lbf-ft	54 to 68
21	Top of Air Spring (Bag) to Cab Mounting Plate, Hex Head Bolt (Figure 112) (See Figure 112, page 165)	40 to 50 Lbf-ft	54 to 68
23, 24	Lateral Control Rod to Lateral Control Rod Mount of Cab Mounting Plate (Item 1), Hex Head Bolt and Hex Lock Nut (Figure 112) (See Figure 112, page 165)	40 to 45 Lbf-ft	54 to 61
23, 24	Lateral Control Rod to Lateral Control Rod Mount of Crossmember Mounting Plate (Item 2), Hex Head Bolt and Hex Lock Nut (Figure 112) (See Figure 112, page 165)	40 to 45 Lbf-ft	54 to 61
27	Threaded Ball Pivot Mounting, Hex Nut (Figure 112) (See Figure 112, page 165)	8 to 10 Lbf-ft	11 to 14
29	Push to Connect Elbow Fitting into “SUPPLY” port of Height Control Vale (Figure 112) (See Figure 112, page 165)	Securely press into SUPPLY port of Height Control Vale until it bottoms. Push twice to verify the air line is inserted past the collet and O-ring. Pull on air line to verify it is fully inserted.	
30	Air Line (supply) into Push to Connect Elbow Fitting in “SUPPLY” port of Height Control Valve (Figure 112) (See Figure 112, page 165)	Securely press into Push to Connect Elbow Fitting in SUPPLY port of Height Control Vale until it bottoms. Push twice to verify the air line is inserted past the collet and O-ring. Pull on air line to verify it is fully inserted.	
1	Push to Connect Elbow Fitting into “SUPPLY” port of Height Control Vale (Figure 113) (See Figure 113, page 167)	Securely press into SUPPLY port of Height Control Vale until it bottoms. Push twice to verify the air line is inserted past the collet and O-ring. Pull on air line to verify it is fully inserted.	

Item No.*	Location	Lbs-in/ft	N•m
2	Air Line (supply) into Push to Connect Elbow Fitting of Height Control Valve (Figure 113) (See Figure 113, page 167)	Securely press into Push to Connect Elbow Fitting of Height Control Vale until it bottoms. Push twice to verify the air line is inserted past the collet and O-ring. Pull on air line to verify it is fully inserted.	
4	Air Line (to air spring) into “SUSP” port of Height Control Valve (Figure 113) (See Figure 113, page 167)	Securely press into SUSP port of Height Control Vale until it bottoms. Push twice to verify the air line is inserted past the collet and O-ring. Pull on air line to verify it is fully inserted.	
8, 9	Height Control Valve Mounting, Carriage Bolts and Hex Lock Nuts (Figure 113) (See Figure 113, page 167)	8 to 10 Lbf-ft	11 to 14
12	Threaded Ball Pivot Mounting, Hex Nut (Figure 113) (See Figure 113, page 167)	8 to 10 Lbf-ft	11 to 14
13	Height Control Valve Arm to Drive Bearing, Pan Head Bearing Screw (Figure 113) (See Figure 113, page 167)	40 to 50 Lbf-in	4.5 to 5.6
3, 4	Height Control Valve Mounting, Hex Head Bolts and Hex Lock Nuts (Figure 114) (See Figure 114, page 172)	8 to 10 Lbf-ft	11 to 14
6	Threaded Ball Pivot Mounting, Hex Nut (Figure 114) (See Figure 114, page 172)	8 to 10 Lbf-ft	11 to 14
9, 10	Shock Absorber Top and Bottom Mounting, Hex Head Bolts and Hex Lock Nuts (Figure 114) (See Figure 114, page 172)	40 to 50 Lbf-in	54 to 68
12, 13	Lateral Control Rod to Lateral Control Rod Mount of Crossmember Mounting Plate (Item 11), Hex Head Bolt and Hex Lock Nut (Figure 114) (See Figure 114, page 172)	40 to 45 Lbf-ft	54 to 61
12, 13	Lateral Control Rod to Lateral Control Rod Mount of Cab Mounting Plate (Item 18), Hex Head Bolt and Hex Lock Nut (Figure 114) (See Figure 114, page 172)	40 to 45 Lbf-ft	54 to 61
16, 17	Rubber Bumper Mounting, Carriage Bolt and Hex Lock Nut (Figure 114) (See Figure 114, page 172)	2 to 4 Lbf-ft	3 to 5
19	Air Spring (Bag) Top Mounting, Retaining Ring (Figure 114) (See Figure 114, page 172)	Securely press on stud of Air Spring (Bag)	

Item No.*	Location	Lbs-in/ft	N•m
21	Air Line (to air spring) into Push to Connect Elbow Fitting of Driver side Air Spring (Bag) (Figure 114) (See Figure 114, page 172)	Securely press into Push to Connect Elbow Fitting of Driver side Air Spring (Bag) until it bottoms. Push twice to verify the air line is inserted past the collet and O-ring. Pull on air line to verify it is fully inserted.	
21	Air Line (to air spring) into “Y” Push-in Connector of Height Control Valve(Figure 114) (See Figure 114, page 172)	Securely press into “Y” Push-in Connector of Height Control Valve until it bottoms. Push twice to verify the air line is inserted past the collet and O-ring. Pull on air line to verify it is fully inserted.	
23	Air Line (to air spring) into Push to Connect Elbow Fitting of Passenger side Air Spring (Bag) (Figure 114) (See Figure 114, page 172)	Securely press into Push to Connect Elbow Fitting of Passenger side Air Spring (Bag) until it bottoms. Push twice to verify the air line is inserted past the collet and O-ring. Pull on air line to verify it is fully inserted.	
23	Air Line (to air spring) into “Y” Push-in Connector of Height Control Valve(Figure 114) (See Figure 114, page 172)	Securely press into “Y” Push-in Connector of Height Control Valve until it bottoms. Push twice to verify the air line is inserted past the collet and O-ring. Pull on air line to verify it is fully inserted.	
25	Push to Connect Elbow Fitting into Top of each Air Spring (Bag) (Figure 114) (See Figure 114, page 172)	Hand tight plus 270 Degrees to 450 Degrees	
1	Both Air Lines (to air spring) into “Y” Push-in Connector in “SUPS” port side of Height Control Valve (Figure 115) (See Figure 115, page 174)	Securely press into “Y” Push-in connector until it bottoms. Push twice to verify the air line is inserted past the collet and O-ring. Pull on air line to verify it is fully inserted.	

Item No.*	Location	Lbs-in/ft	N•m
2	“Y” Push-in Connector (Item 2) into “SUPS” port side of Height Control Valve (Figure 115) (See Figure 115, page 174)	Securely press into SUSP port of Height Control Valve until it bottoms. Push twice to verify the air line is inserted past the collet and O-ring. Pull on air line to verify it is fully inserted.	
4	Air Lines (supply) into Push to Connect Elbow Fitting in “SUPPLY” port side of Height Control Valve (Figure 115) (See Figure 115, page 174)	Securely press into Push to Connect Elbow Fitting until it bottoms. Push twice to verify the air line is inserted past the collet and O-ring. Pull on air line to verify it is fully inserted.	
8	Height Control Valve Lever to Drive Bearing, Pan Head Bearing Screw (Figure 115) (See Figure 115, page 174)	40 to 50 Lbf-in	4.5 to 5.6
3, 4	Height Control Valve Mounting, Hex Head Bolts and Hex Lock Nuts (Figure 116) (See Figure 116, page 177)	8 to 10 Lbf-ft	11 to 14
9, 10	Shock Absorber Top and Bottom Mounting, Hex Head Bolts and Hex Lock Nuts (Figure 116) (See Figure 116, page 177)	40 to 50 Lbf-in	4.5 to 5.6
12, 13	Lateral Control Rod to Lateral Control Rod Mount of Crossmember Mounting Plate (Item 11), Hex Head Bolt and Hex Lock Nut (Figure 116) (See Figure 116, page 177)	40 to 45 Lbf-ft	54 to 61
12, 13	Lateral Control Rod to Lateral Control Rod Mount of Cab Mounting Plate (Item 18), Hex Head Bolt and Hex Lock Nut (Figure 116) (See Figure 116, page 177)	40 to 45 Lbf-ft	54 to 61
19	Air Spring Top Mounting, Retaining Ring (Figure 116) (See Figure 116, page 177)	Securely press on stud of Air Spring (Bag)	
20	Air Line (to air spring) from Push to Connect Tee Branch Fitting into “SUSP” port of Height Control Valve (Item 1) (Figure 116) (See Figure 116, page 177)	Securely press into Susp Port of Height Control Valve until it bottoms. Push twice to verify the air line is inserted past the collet and O-ring. Pull on air line to verify it is fully inserted.	

Item No.*	Location	Lbs-in/ft	N•m
20	Air Line (to air spring) into Push to Connect Elbow Fitting (Item 21) of passenger side Air Spring (Bag) (Figure 116) (See Figure 116, page 177)	Securely press into Push to Connect Elbow Fitting of passenger side Air Spring (Bag) until it bottoms. Push twice to verify the air line is inserted past the collet and O-ring. Pull on air line to verify it is fully inserted.	
20	Air Line (to air spring) from passenger side Air Spring (Bag) into Push to Connect Tee Branch Fitting (Item 22) (Figure 116) (See Figure 116, page 177)	Securely press into Push to Connect Tee Fitting until it bottoms. Push twice to verify the air line is inserted past the collet and O-ring. Pull on air line to verify it is fully inserted.	
20	Air Line (to air spring) from “SUSP” port of Height Control Valve into Push to Connect Tee Branch Fitting (Item 22)(Figure 116) (See Figure 116, page 177)	Securely press into Push to Connect Tee Branch Fitting until it bottoms. Push twice to verify the air line is inserted past the collet and O-ring. Pull on air line to verify it is fully inserted.	
21	Push to Connect Elbow Fitting into Top of each Air Spring (Bag) (Figure 116) (See Figure 116, page 177)	Securely press into Push to Connect Elbow Fitting of Air Spring (Bag) until it bottoms. Push twice to verify the air line is inserted past the collet and O-ring. Pull on air line to verify it is fully inserted.	
22	Push to Connect Tee Branch Fitting into Elbow Fitting of driver side Air Spring (Bag) (Figure 116) (See Figure 116, page 177)	Securely press into Elbow Fitting until it bottoms. Push twice to verify the air line is inserted past the collet and O-ring. Pull on air line to verify it is fully inserted.	
1	Air Line (to air spring) into “SUSP” port of Height Control Valve (Figure 117) (See Figure 117, page 179)	Securely press into Susp Port of Height Control Valve until it bottoms. Push twice to verify the air line is inserted past the collet and O-ring. Pull on air line to verify it is fully inserted.	

Item No.*	Location	Lbs-in/ft	N•m
3	Air Line (to air spring) into “SUPPLY” port of Height Control Valve (Figure 117) (See Figure 117, page 179)	Securely press into Supply Port of Height Control Valve until it bottoms. Push twice to verify the air line is inserted past the collet and O-ring. Pull on air line to verify it is fully inserted.	
7	Height Control Valve Lever to Drive Bearing, Pan Head Bearing Screw (Figure 117) (See Figure 117, page 179)	40 to 50 Lbf-in	4.5 to 5.6
4	Elbow Fitting into bottom of each Air Spring (Bag) (Figure 118) (See Figure 118, page 182)	Hand tight plus 270 Degrees to 450 Degrees	
5	Air Line (to air spring) into Compression Nut of Elbow Fitting (Item 4) in passenger side Air Spring (Bag) (Figure 118) (See Figure 118, page 182)	Hand tight plus 450 Degrees to 630 Degrees	
5	Air Line (to air spring) into Compression Nut of both sides of Tee Fitting (not shown) in Elbow Fitting of driver side Air Spring (Bag) (Figure 118) (See Figure 118, page 182)	Hand tight plus 450 Degrees to 630 Degrees	
6, 7	Height Control Valve Mounting, Hex Head Bolts and Hex Lock Nuts (Figure 118) (See Figure 118, page 182)	8 to 10 Lbf-ft	11 to 14
8, 9	Shock Absorber Top Mounting, Hex Head Bolts and Hex Lock Nuts (Figure 118) (See Figure 118, page 182)	40 to 50 Lbf-ft	54 to 68
10, 9	Shock Absorber Bottom Mounting, Hex Head Bolts and Hex Lock Nuts (Figure 118) (See Figure 118, page 182)	40 to 50 Lbf-ft	54 to 68
11, 12	Lateral Control Rod to Lateral Control Rod Mount of Suspension Crossmember Bracket (Item 21), Hex Head Bolt and Hex Lock Nut (Figure 118) (See Figure 118, page 182)	40 to 45 Lbf-ft	54 to 61
13, 12	Lateral Control Rod to Lateral Control Rod Mount of Left Cab Mount Plate (Item 19), Hex Head Bolt and Hex Lock Nut (Figure 118) (See Figure 118, page 182)	40 to 45 Lbf-ft	54 to 61
16	Air Spring to Suspension Crossmember Bracket, Jam Nut 3/4 (Figure 118) (See Figure 118, page 182)	30 Lbf-ft	41
None	Tee Fitting (not shown) into Compression Nut of Elbow Fitting (Item 4 not shown) of driver side Air Spring (Bag) (Figure 118) (See Figure 118, page 182)	Hand tight plus 450 Degrees to 630 Degrees	

Item No.*	Location	Lbs-in/ft	N•m
4	Push to Connect Connector and Air Line (supply) (Item 1) into elbow fitting in “SUPPLY” port of Height Control Valve (Figure 119) (See Figure 119, page 184)	Hand tight plus 1 turn	
8	Compression Nut and Air Line (to air spring) (Item 2) onto “SUSP” port of Height Control Valve (Figure 119) (See Figure 119, page 184)	Hand tight plus 1 turn	
4	Air Line (to air spring) into Compression Nut of Elbow Fitting (Item 6) in passenger side Air Spring (Bag) (Figure 120) (See Figure 120, page 187)	Hand tight plus 450 Degrees to 630 Degrees	
4	Air Line (to air spring) into Compression Nut of Elbow Fitting (Item 6) in driver side Air Spring (Bag) (Figure 120) (See Figure 120, page 187)	Hand tight plus 450 Degrees to 630 Degrees	
4	Air Line (to air spring) into Compression Nut on both sides of tee Fitting (Item 7) in Height Control Valve (Figure 120) (See Figure 120, page 187)	Hand tight plus 450 Degrees to 630 Degrees	
6	Elbow Fitting into bottom of each Air Spring (Bag) (Figure 120) (See Figure 120, page 187)	Hand tight plus 270 Degrees to 450 Degrees	
7	Tee Fitting into “SUSP” port of Height Control Valve (Figure 120) (See Figure 120, page 187)	15 to 18 Lbf-ft	20.3 to 24.5
8, 9	Height Control Valve Mounting, Hex Head Bolts and Hex Lock Nuts (Figure 120) (See Figure 120, page 187)	8 to 10 Lbf-ft	11 to 14
10, 11	Shock Absorber Top Mounting, Hex Head Bolts and Hex Lock Nuts (Figure 120) (See Figure 120, page 187)	40 to 50 Lbf-ft	54 to 68
12, 11	Shock Absorber Bottom Mounting, Hex Head Bolts and Hex Lock Nuts (Figure 120) (See Figure 120, page 187)	40 to 50 Lbf-ft	54 to 68
13, 14	Lateral Control Rod to Lateral Control Rod Mount of Left Cab Mount Plate (Item 22), Hex Head Bolt and Hex Lock Nut (Figure 120) (See Figure 120, page 187)	40 to 45 Lbf-ft	54 to 61
15, 16	Lateral Control Rod to Lateral Control Rod Mount of Suspension Crossmember Bracket (Item 30), Hex Head Bolt and Hex Lock Nut (Figure 120) (See Figure 120, page 187)	40 to 45 Lbf-ft	54 to 61
20	Air Springs (Bags) to Suspension Crossmember Bracket, Jam Nut 3/4 (Figure 120) (See Figure 120, page 187)	30 Lbf-ft	41

Item No.*	Location	Lbs-in/ft	N•m
1	Air Line (supply) (Item 1) into “SUPPLY” port of Height Control Valve, Push to Connect (Figure 121) (See Figure 121, page 190)	Securely press into Supply Port of Height Control Valve until it bottoms. Push twice to verify the air line is inserted past the collet and O-ring. Pull on air line to verify it is fully inserted.	
4	Air Line (to air spring) (Item 2) into Compression Nut on both sides of Tee Fitting (Item 12) of Height Control Valve (Figure 121) (See Figure 121, page 190)	Hand tight plus 1 turn	
8	Height Control Valve Lever to Drive Bearing, Pan Head Bearing Screw (Figure 121) (See Figure 121, page 190)	40 to 50 Lbf-in	4.5 to 5.6
12	Tee Fitting into “SUSP” port of Height Control Valve (Figure 121) (See Figure 121, page 190)	15 to 18 Lbf-ft	20.3 to 24.5
4	Air Line (to air spring) into Compression Nut of Elbow Fitting (Item 6) in passenger side Air Spring (Bag) (Figure 122) (See Figure 122, page 193)	Hand tight plus 450 Degrees to 630 Degrees	
4	Air Line (to air spring) into Compression Nut of Elbow Fitting (Item 6) in driver side Air Spring (Bag) (Figure 122) (See Figure 122, page 193)	Hand tight plus 450 Degrees to 630 Degrees	
4	Air Line (to air spring) into Compression Nut on both sides of tee Fitting (Item 7) in Height Control Valve (Figure 122) (See Figure 122, page 193)	Hand tight plus 450 Degrees to 630 Degrees	
6	Elbow Fitting into bottom of each Air Spring (Bag) (Figure 122) (See Figure 122, page 193)	Hand tight plus 270 Degrees to 450 Degrees	
7	Tee Fitting into “SUSP” port of Height Control Valve (Figure 122) (See Figure 122, page 193)	15 to 18 Lbf-ft	20.3 to 24.5
8, 9	Height Control Valve Mounting, Hex Head Bolts and Hex Lock Nuts (Figure 122) (See Figure 122, page 193)	8 to 10 Lbf-ft	11 to 14
10, 11	Shock Absorber Top Mounting, Hex Head Bolts and Hex Lock Nuts (Figure 122) (See Figure 122, page 193)	45 Lbf-ft	61
12, 11	Shock Absorber Bottom Mounting, Hex Head Bolts and Hex Lock Nuts (Figure 122) (See Figure 122, page 193)	45 Lbf-ft	61
13, 14	Lateral Control Rod to Lateral Control Rod Mount of Left Cab Mount Plate (Item 22), Hex Head Bolt and Hex Lock Nut (Figure 122) (See Figure 122, page 193)	40 to 45 Lbf-ft	54 to 61

Item No.*	Location	Lbs-in/ft	N•m
15, 16	Lateral Control Rod to Lateral Control Rod Mount of Suspension Crossmember Bracket (Item 30), Hex Head Bolt and Hex Lock Nut (Figure 122) (See Figure 122, page 193)	40 to 45 Lbf-ft	54 to 61
20	Air Springs (Bags) to Suspension Crossmember Bracket, Jam Nut 3/4 (Figure 122) (See Figure 122, page 193)	30 Lbf-ft	41

SPECIAL SERVICE TOOLS

Refer to Figure 184 and Figure 185 (See Figure 185, page 365) for special tools.

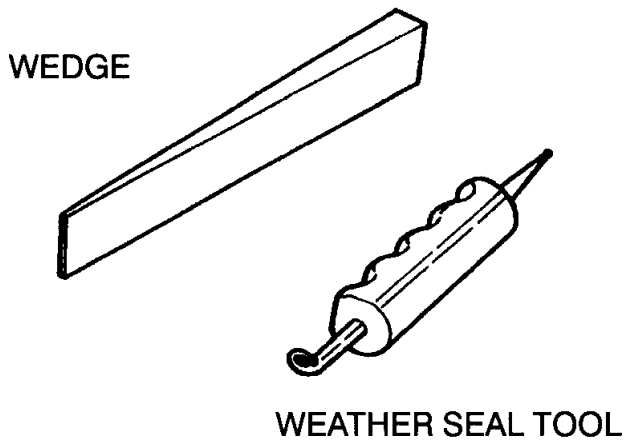

Figure 184 Wedge and Weather Seal Tool

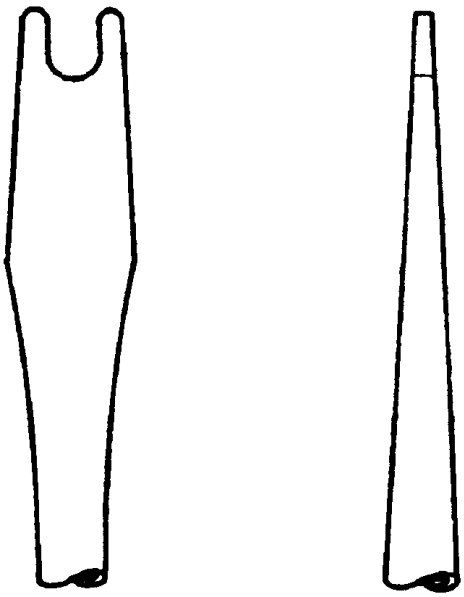

PUSH–IN RETAINER REMOVER

Figure 185 Push-In Retainer Remover