SERVICE MANUAL SECTION

RE Bus Models Built 1999 to 2006 BODY ELECTRICAL CIRCUIT DIAGRAMS

Model: RE 200
Start Date: 01/01/1999 End Date: 12/31/2006

Model: RE 300
Start Date: 01/01/1999 End Date: 12/31/2006

S08335

02/28/2008

Copyright © 02/28/2008 International Truck and Engine Corporation

Table of Contents

1. ABBREVIATIONS, SYMBOLS, COMPONENTS, AND WIRE CHARTS (CHAPTER 1).....1
1.1. ABBREVIATIONS AND SYMBOLS, P. 1.....1
1.2. ABBREVIATIONS AND SYMBOLS, P. 2.....2
1.3. ELECTRICAL COMPONENT, P. 3.....3
1.4. ELECTRICAL COMPONENT, P. 4.....4
1.5. ELECTRICAL COMPONENT, P. 5.....5
1.6. ELECTRICAL COMPONENT, P. 6.....6
1.7. ELECTRICAL COMPONENT, P. 7.....7
1.8. ELECTRICAL COMPONENT, P. 8.....8
1.9. STOP ARM — ELECTRIC (W/ CANCEL SWITCH), P. 9.....9
1.10. SCHEMATIC SYMBOL CHART, P. 10.....10
1.11. SCHEMATIC SYMBOL CHART, P. 11.....11
1.12. SCHEMATIC SYMBOL CHART, P. 12.....12
1.13. SCHEMATIC SYMBOL CHART, P. 13.....13
1.14. SCHEMATIC SYMBOL CHART, P. 14.....14
1.15. SCHEMATIC SYMBOL CHART, P. 15.....15
1.16. WIRE REFERENCE OF GAUGE AND COLOR AND CIRCUIT, P. 16.....16
1.17. WIRE REFERENCE OF GAUGE AND COLOR AND CIRCUIT, P. 17.....17
1.18. WIRE REFERENCE OF GAUGE AND COLOR AND CIRCUIT, P. 18.....18
1.19. WIRE REFERENCE OF GAUGE AND COLOR AND CIRCUIT, P. 19.....19
1.20. WIRE REFERENCE OF GAUGE AND COLOR AND CIRCUIT, P. 20.....20
1.21. WIRE REFERENCE OF GAUGE AND COLOR AND CIRCUIT, P. 21.....21
1.22. WIRE REFERENCE OF GAUGE AND COLOR AND CIRCUIT, P. 22.....22
1.23. WIRE REFERENCE OF GAUGE AND COLOR AND CIRCUIT, P. 23.....23
1.24. WIRE REFERENCE OF GAUGE AND COLOR AND CIRCUIT, P. 24.....24
1.25. WIRE REFERENCE OF GAUGE AND COLOR AND CIRCUIT, P. 25.....25
1.26. WIRE REFERENCE OF GAUGE AND COLOR AND CIRCUIT, P. 26.....26
1.27. WIRE REFERENCE OF GAUGE AND COLOR AND CIRCUIT, P. 27.....27
1.28. WIRE REFERENCE OF GAUGE AND COLOR AND CIRCUIT, P. 28.....28
1.29. WIRE REFERENCE OF GAUGE AND COLOR AND CIRCUIT, P. 29.....29
1.30. WIRE REFERENCE OF GAUGE AND COLOR AND CIRCUIT, P. 30.....30
1.31. WIRE REFERENCE OF GAUGE AND COLOR AND CIRCUIT, P. 31.....31
1.32. WIRE REFERENCE OF GAUGE AND COLOR AND CIRCUIT, P. 32.....32
1.33. WIRE REFERENCE OF GAUGE AND COLOR AND CIRCUIT, P. 33.....33
1.34. WIRE REFERENCE OF GAUGE AND COLOR AND CIRCUIT, P. 34.....34
1.35. WIRE REFERENCE OF GAUGE AND COLOR AND CIRCUIT, P. 35.....35
1.36. WIRE REFERENCE OF GAUGE AND COLOR AND CIRCUIT, P. 36.....36
1.37. WIRE REFERENCE OF GAUGE AND COLOR AND CIRCUIT, P. 37.....37
1.38. RE BUS WIRING LAYOUT, P. 38.....38

2. POWER DISTRIBUTION (CHAPTER 2).....39
2.1. 18CKT POWER DISTRIBUTION IGNITION OPERATED MASTER DISCONNECT, P. 1.....39
2.2. ALL CIRCUITS HOT ALL THE TIME, P. 2.....40
2.3. FUSE BLOCK P1, P. 3.....41
2.4. FUSE BLOCK P2, P. 4.....42
2.5. FUSE BLOCK P3, P. 5.....43
2.6. FUSE BLOCK P4, P. 6.....44

2.7. FUSE BLOCK FLORIDA, P. 7.....45
2.8. FUSE BLOCK FLORIDA, P. 8.....46
2.9. FUSE BLOCK FLORIDA, P. 9.....47
2.10. 18CKT POWER DISTRIBUTION ROCKER SWITCH OPERATED MASTER DISCONNECT, P. 10.....48
2.11. 18CKT POWER DISTRIBUTION ROCKER SWITCH OPERATED MASTER DISCONNECT, P. 11.....49
2.12. POWER DISTRIBUTED ROCKER SWITCH OPERATED MASTER DISCONNECT, P. 12.....50
2.13. POWER DISTRIBUTED ROCKER SWITCH OPERATED MASTER DISCONNECT, P. 13.....51
2.14. POWER DISTRIBUTED ROCKER SWITCH OPERATED NOISE KILL, P. 14.....52
2.15. POWER DISTRIBUTED ROCKER SWITCH OPERATED NOISE KILL, P. 15.....53
2.16. POWER DISTRIBUTION IGNITION OPERATED MASTER DISCONNECT, P. 16.....54
2.17. POWER DISTRIBUTION IGNITION OPERATED MASTER DISCONNECT, P. 17.....55
2.18. POWER DISTRIBUTION PB30500, P. 18.....56
2.19. POWER DISTRIBUTION PB30500, P. 19.....57
2.20. IGNITION ACTIVATED MASTER DISCONNECT ROCKER SWITCH OPERATED NOISE KILL DISCONNECT, P. 20.....58
2.21. IGNITION ACTIVATED MASTER DISCONNECT ROCKER SWITCH OPERATED NOISE KILL DISCONNECT, P. 21.....59

3. WARNING LIGHT SYSTEMS (CHAPTER 3).....60
3.1. WARNING LIGHTS — ELS, P. 1.....60
3.2. WARNING LIGHTS, P. 2.....61
3.3. INDICATOR LIGHTS FOR WARNING LIGHT SYSTEM IN RIGHT SWITCH PANEL, P. 3.....62
3.4. OVERRIDE, P. 4.....63
3.5. OVERRIDE ON A SEPARATE SWITCH, P. 5.....64
3.6. ALWAYS HOT OVERRIDE ROCKER SWITCH (WITH MANUAL DOOR), P. 6.....65
3.7. WELDON FLASHER SYSTEM WITH MASTER FLASHER SWITCH AND FLASHER LIGHT START SWITCH, P. 7.....66
3.8. WARNING LIGHTS SYSTEM, P. 8.....67
3.9. WARNING LIGHTS SYSTEM — FLORIDA, P. 9.....68
3.10. WARNING LIGHTS SYSTEM — FLORIDA, P. 10.....69
3.11. WARNING LIGHTS SYSTEM — VIRGINIA, P. 11.....70
3.12. WARNING LIGHTS SYSTEM — VIRGINIA, P. 12.....71
3.13. WARNING LIGHTS SYSTEM — MARYLAND, P. 13.....72
3.14. WARNING LIGHTS SYSTEM — MARYLAND, P. 14.....73
3.15. WARNING LIGHTS SYSTEM — MARYLAND, P. 15.....74
3.16. WARNING LIGHTS SYSTEM — WEST VIRGINIA, P. 16.....75
3.17. WARNING LIGHTS SYSTEM — WEST VIRGINIA, P. 17.....76
3.18. WARNING LIGHTS SYSTEM — WEST VIRGINIA, P. 18.....77
3.19. WARNING LIGHTS SYSTEM — OHIO, P. 19.....78
3.20. WARNING LIGHTS SYSTEM — OHIO, P. 20.....79
3.21. ELS FLASHER SYSTEM WITH MASTER FLASHER SWITCH AND FLASHER LIGHT START SWITCH, P. 21.....80

4. STOP ARM — CROSSING GATE (CHAPTER 4).....81
4.1. CROSSING GATE ELECTRIC WITH OVERHEAD CANCEL, P. 1.....81
4.2. CROSSING GATE ELECTRIC WITH LH CANCEL SW, P. 2.....82
4.3. CROSSING GATE ELECTRIC WITH LH CANCEL SW SINGLE CYCLE, P. 3.....83
4.4. CROSSING GATE ELECTRIC, P. 4.....84
4.5. STOP ARM — ELECTRIC (WITH CANCEL SWITCH), P. 5.....85
4.6. STOP ARM — AIR (WITH CANCEL SWITCH) INCANDESCENT LIGHTS — FRONT, P. 6.....86
4.7. AIR CROSSING GATE WITH CROSSING GATE CANCEL SWITCH, P. 7.....87

4.8. AIR CROSSING GATE WITH SINGLE CYCLE CROSSING GATE CANCEL SWITCH, P. 8....88
4.9. ELECTRIC FRONT STOP ARM — SPECIALTY, P. 9....89
4.10. ELECTRIC FRONT STOP ARM — TRANSPEC, P. 10....90
4.11. STOP ARM WITH STROBE LIGHT — AIR FRONT, P. 11....91
4.12. STOP ARM WITH STROBE LIGHT — ELECTRIC FRONT, P. 12....92
4.13. STOP ARM WITH STROBE LIGHT — AIR REAR, P. 13....93
4.14. STOP ARM WITH STROBE LIGHT — ELECTRIC REAR, P. 14....94
4.15. STOP ARM WITH INCANDESCENT LIGHT — AIR REAR, P. 15....95
4.16. STOP ARM WITH INCANDESCENT LIGHT — AIR REAR, P. 16....96

5. ENTRANCE DOOR CONTROL (CHAPTER 5)....97
5.1. ELECTRIC DOOR — 2 POSITION DOOR CONTROL WITH VANDAL LOCK, P. 1....97
5.2. ELECTRIC DOOR — 2 POSITION DOOR CONTROL WITH VANDAL LOCK, P. 2....98
5.3. ELECTRIC DOOR — 3 POSITION DOOR CONTROL WITH VANDAL LOCK, P. 3....99
5.4. ELECTRIC DOOR — 3 POSITION DOOR CONTROL WITH VANDAL LOCK, P. 4....100
5.5. VANDAL LOCK FOR AIR ENTRANCE DOOR, P. 5....101
5.6. MANUAL DOOR CONTROL WITH VANDAL LOCK, P. 6....102
5.7. AIR DOOR WITH 2 POSITION DOOR CONTROL, P. 7....103
5.8. AIR DOOR WITH 3 POSITION DOOR CONTROL, P. 8....104
5.9. AIR DOOR WITH 3 POSITION TOGGLE SWITCH DOOR CONTROL, P. 9....105
5.10. AIR DOOR WITH 3 POSITION TOGGLE SWITCH DOOR CONTROL, P. 10....106
5.11. DUMP VALVE, P. 11....107
5.12. MARYLAND AIR DOOR EXTERNAL SWITCH RELEASE, P. 12....108
5.13. 3–POSITION TOGGLE SWITCH FOR ELECTRIC ENTRANCE DOOR (FAIRFAX COUNTY), P. 13....109
5.14. 3–POSITION TOGGLE SWITCH FOR ELECTRIC ENTRANCE DOOR (FAIRFAX COUNTY), P. 14....110
5.15. 2–POSITION ROTARY FOR AIR ENTRANCE DOOR SWITCH, P. 15....111
5.16. 3–POSITION ROTARY FOR AIR ENTRANCE DOOR SWITCH, P. 16....112
5.17. 2–POSITION ROTARY FOR ELECTRIC ENTRANCE DOOR SWITCH, P. 17....113
5.18. 2–POSITION ROTARY FOR ELECTRIC ENTRANCE DOOR SWITCH, P. 18....114
5.19. 3–POSITION ROTARY FOR ELECTRIC ENTRANCE DOOR SWITCH, P. 19....115
5.20. 3–POSITION ROTARY FOR ELECTRIC ENTRANCE DOOR SWITCH, P. 20....116
5.21. ALTERNATE ENTRANCE DOOR CONTROL, P. 21....117

6. NOISE KILL (CHAPTER 6)....118
6.1. DRIVER'S HEATER, P. 1....118
6.2. MIDSHIP AUX HEATER LH AND RH — SINGLE SWITCH, P. 2....119
6.3. POWER VENTS FRONT AND REAR, P. 3....120
6.4. REAR AUX HEATER LH AND RH — SINGLE SWITCH, P. 4....121
6.5. RADIO AND PA HORN IN OVERHEAD SWITCH PANEL, P. 5....122
6.6. RADIO AND PA IN OVERHEAD SWITCH PANEL, P. 6....123
6.7. BOTTOM STEP HEATER, P. 7....124
6.8. STEPWELL HEATER FAN, P. 8....125
6.9. STEP DEFROST HEATER, P. 9....126
6.10. LEFT DEFOG FAN DIAGRAM IN RH SW PANEL, P. 10....127
6.11. LEFT DEFOG FAN DIAGRAM IN LH SW PANEL, P. 11....128
6.12. RIGHT OF CENTER DEFOG FAN DIAGRAM IN RH SW PANEL, P. 12....129
6.13. RIGHT OF CENTER DEFOG FAN DIAGRAM IN LH SW PANEL, P. 13....130
6.14. FAR LEFT AND LEFT OF CENTER DEFOG FAN DIAGRAM, P. 14....131
6.15. CENTER DEFOG BLOWER WIRING DIAGRAM, P. 15....132
6.16. LEFT OF DRIVER DEFOG BLOWER WIRING DIAGRAM, P. 16....133

7. INTERIOR LIGHTING (CHAPTER 7)....134
7.1. STEP AND SKIRT LIGHT TIED TO DOME LIGHTS, P. 1....134
7.2. STEP AND SKIRT LIGHT TIED TO IGNITION, P. 2....135
7.3. STEP AND SKIRT LIGHT TIED TO CLEARANCE LIGHTS AND CLEARANCE LIGHT TIED TO TAIL LIGHT, P. 3....136
7.4. STEP AND SKIRT LIGHT TIED TO CLEARANCE LIGHTS, P. 4....137
7.5. SWITCH ILLUMINATION, P. 5....138
7.6. SWITCH ILLUMINATION, P. 6....139
7.7. DOME LIGHTS RH / LH SIDES SINGLE OVERHEAD SWITCH, P. 7....140
7.8. DOME LIGHTS RH / LH SIDES SINGLE LEFT HAND SWITCH, P. 8....141
7.9. FRONT REAR DOME LIGHTS, P. 9....142
7.10. DOME LIGHTS RH / LH ON SEPARATE OVERHEAD SWITCHES, P. 10....143
7.11. DRIVER DOME LIGHTS — OVERHEAD SWITCH PANEL, P. 11....144
7.12. DRIVER DOME LIGHTS — LEFT HAND SWITCH PANEL, P. 12....145
7.13. ACTIVITY LIGHT, LEFT ON RIGHT SIDE, P. 13....146
7.14. DOME LIGHTS ACTIVATED BY ANY EMERGENCY EXIT, P. 14....147
7.15. DOME LIGHTS ACTIVATED BY ROCKER SW OR REAR EMERGENCY EXIT WINDOW, P. 15....148
7.16. DOME LIGHTS AND BUZZER ACTIVATED BY EMERGENCY EXIT WITH DOME LT SWITCH, P. 16....149
7.17. DOME LIGHTS ACTIVATED BY ENTRANCE DOOR (WITH ALTERNATE ENTRANCE DOOR), P. 17....150
7.18. FRONT DOME LIGHT CONTROLLED BY RHEOSTAT, P. 18....151
7.19. REAR DOME LIGHT CONTROLLED BY RHEOSTAT, P. 19....152
7.20. ENGINE COMPARTMENT LIGHT, P. 20....153
7.21. SWITCH ILLUMINATION WITH SEPARATE DIMMER SWITCH, P. 21....154
7.22. INDICATOR LIGHT 1” GREEN TIED TO DIRECTIONAL LIGHTS, P. 22....155
7.23. LAST DOME LH / RH SIDES, P. 23....156
7.24. REAR ROW DOME LIGHTS LH / RH SIDES, P. 24....157
7.25. FRONT REAR DOME LIGHTS, P. 25....158

8. EXTERIOR LIGHTING (CHAPTER 8)....159
8.1. BACKUP LIGHT AND ALARM, P. 1....159
8.2. DESTINATION SIGN FRONT AND REAR, P. 2....160
8.3. FOG LIGHTS, P. 3....161
8.4. HEADLIGHTS, P. 4....162
8.5. STROBE LIGHT REMOTE POWER SUPPLY, P. 5....163
8.6. STROBE LIGHT SELF CONTAINED, P. 6....164
8.7. TURN SIGNAL, P. 7....165
8.8. TURN SIGNAL, P. 8....166
8.9. BRAKE LIGHTS — AIR BRAKE ONLY, P. 9....167
8.10. TAIL LIGHTS, P. 10....168
8.11. BACKUP LIGHTS ACTIVATED BY REAR OVAL KICK OUT WINDOW, P. 11....169
8.12. CLEARANCE LIGHTS, P. 12....170
8.13. CLEARANCE LIGHTS, P. 13....171
8.14. LUGGAGE BOX LIGHTS, P. 14....172
8.15. LUGGAGE BOX LIGHTS SAN DIEGO, P. 15....173
8.16. 12 — 16 LAMP MONITOR, P. 16....174
8.17. STROBE LIGHT — OVERHEAD SWITCH PANEL, P. 17....175
8.18. STROBE LIGHT LEFT HAND SWITCH PANEL, P. 18....176
8.19. STROBE LIGHT ACTIVATED BY AMBER AND RED WARNING LIGHTS OR SWITCH, P. 19....177
8.20. BRAKE LIGHTS — HYDRAULIC BRAKE ONLY, P. 20....178

8.21. 8 LAMP MONITOR, P. 21.....179
8.22. LUGGAGE BOX LIGHTS, P. 22.....180

9. EMERGENCY EXITS (CHAPTER 9).....181
9.1. EMERGENCY K / O WINDOWS, P. 1.....181
9.2. ROOF HATCHES, P. 2.....182
9.3. EMERGENCY EXIT BUZZER WITHOUT EMERGENCY EXIT DOOR, P. 3.....183
9.4. ROOF HATCH WITH SINGLE SPEED POWER VENT, P. 4.....184
9.5. ROOF HATCH WITH DUAL SPEED POWER VENT, P. 5.....185

10. MIRRORS (CHAPTER 10).....186
10.1. HEATED MIRROR REAR VIEW / CROSS VIEW WITH MASTER DISCONNECT, P. 1.....186
10.2. HEATED MIRROR REAR VIEW / CROSS VIEW WITHOUT MASTER DISCONNECT, P. 2...187
10.3. MOTORIZED AND HEATED MIRRORS, P. 3.....188
10.4. MOTORIZED AND HEATED MIRRORS (ROSCO), P. 4.....189
10.5. MOTORIZED AND HEATED MIRRORS (ROSCO), P. 5.....190

11. LIFT DOOR (CHAPTER 11).....191
11.1. LIFT DOOR WITH FLASHING INDICATOR LIGHT IN RIGHT SWITCH PANEL, P. 1.....191
11.2. LIFT DOOR / INTERLOCK — AIR PARK BRAKE WITH 49GLZ 'IGNITION KEY ON', P. 2...192
11.3. LIFT DOOR / INTERLOCK — AIR PARK BRAKE WITH 49GLZ 'IGNITION KEY ON', P. 3...193
11.4. INTERIOR AND EXTERIOR LIFT LIGHT WITH TOGGLE SWITCH, P. 4.....194
11.5. LIFT DOOR AND INTERLOCK — AIR PARK BRAKES, P. 5.....195
11.6. LIFT DOOR INTERLOCK — AIR PARK BRAKE INTERLOCK WITH 49GLZ 'IGNITION KEY ON', P. 6.....196
11.7. LIFT DOOR INTERLOCK — AIR PARK BRAKE INTERLOCK WITH 49GLZ 'IGNITION KEY ON', P. 7.....197
11.8. LIFT DOOR / INTERLOCK — PARK BRAKE INTERLOCK WITH 49GLZ, P. 8.....198
11.9. LIFT DOOR / INTERLOCK — AIR PARK BRAKE INTERLOCK WITH 49GLZ 'IGNITION KEY ON OR OFF', P. 9.....199
11.10. PARK BRAKE / INTERLOCK — AIR PARK BRAKE INTERLOCK WITH 49GMM 'IGNITION KEY ON OR OFF', P. 10.....200
11.11. LIFT DOOR / INTERLOCK — AIR PARK BRAKE INTERLOCK WITH 49GMM 'IGNITION KEY ON OR OFF', P. 11.....201
11.12. LIFT DOOR / MIRAGE LIFT INTERLOCK — THRESHOLD WARNING SYSTEM WITH AIR PARK BRAKE, P. 12.....202

12. MISCELLANEOUS (CHAPTER 12).....203
12.1. AIR COMPRESSOR, P. 1.....203
12.2. BOOSTER PUMP, P. 2.....204
12.3. CAMERA IGNITION ACTIVATED, P. 3.....205
12.4. DC OUTLET, P. 4.....206
12.5. FUEL FIRED HEATER WITH 7–DAY TIMER, P. 5.....207
12.6. HEATED WIPER BLADES, P. 6.....208
12.7. IGNITION FEED DIAGRAM, P. 7.....209
12.8. IGNITION / ACCESSORY FEED DIAGRAM, P. 8.....210
12.9. LOCKING OVERHEAD COMPARTMENT WITH BUZZER, P. 9.....211
12.10. TRACTION SANDERS 5 OR 10 GALLON, P. 10.....212
12.11. DUAL INTERMITTENT WINDSHIELD WIPER, P. 11.....213
12.12. WINDSHIELD WIPER MOTOR, P. 12.....214
12.13. DUAL WINDSHIELD WIPER CONTROL, P. 13.....215
12.14. DUAL WINDSHIELD WIPER CONTROL, P. 14.....216
12.15. SINGLE INTERMITTENT WINDSHIELD WIPER, P. 15.....217

12.16. SINGLE INTERMITTENT WINDSHIELD WIPER, P. 16.....218
12.17. SINGLE WINDSHIELD WIPER CONTROL, P. 17.....219
12.18. SINGLE WINDSHIELD WIPER CONTROL, P. 18.....220
12.19. STARTER INTERRUPT / VANDAL LOCK — EMERGENCY EXITS, P. 19.....221
12.20. STARTER INTERRUPT / VANDAL LOCK — EMERGENCY EXITS, P. 20.....222
12.21. POST TRIP INSPECTION — CRS, P. 21.....223
12.22. POST TRIP INSPECTION — CRS, P. 22.....224
12.23. AIR HORN, P. 23.....225
12.24. CAMERA SWITCH ACTIVATED, P. 24.....226
12.25. CHILD CHECK — MATE SYSTEM, P. 25.....227
12.26. AIR HORN, PUSH BUTTON OR FOOT SWITCH OPERATION, P. 26.....228

13. CONNECTOR BODY COMPOSITES (CHAPTER 13).....229
13.1. CONNECTOR COMPOSITES (J1), P. 1.....229
13.2. CONNECTOR COMPOSITE (BBJ1), P. 2.....230
13.3. CONNECTOR COMPOSITES (J1), P. 3.....231
13.4. CONNECTOR COMPOSITE (J2), P. 4.....232
13.5. CONNECTOR COMPOSITES (BBJ2), P. 5.....233
13.6. CONNECTOR COMPOSITES (J2), P. 6.....234
13.7. CONNECTOR COMPOSITES (BLANK PAGE), P. 7.....235
13.8. CONNECTOR COMPOSITES (J3), P. 8.....236
13.9. CONNECTOR COMPOSITES (J4), P. 9.....237
13.10. CONNECTOR COMPOSITES (J4), P. 10.....238
13.11. CONNECTOR COMPOSITES (J5), P. 11.....239
13.12. CONNECTOR COMPOSITES (J5), P. 12.....240
13.13. CONNECTOR COMPOSITES (J6), P. 13.....241
13.14. CONNECTOR COMPOSITES (J7), P. 14.....242
13.15. CONNECTOR COMPOSITES (J9), P. 15.....243
13.16. CONNECTOR COMPOSITES (J9), P. 16.....244
13.17. CONNECTOR COMPOSITES (J10), (J33), P. 17.....245
13.18. CONNECTOR COMPOSITES (J11), P. 18.....246
13.19. CONNECTOR COMPOSITES (BLANK PAGE), P. 19.....247
13.20. CONNECTOR COMPOSITES (BLANK PAGE), P. 20.....248
13.21. CONNECTOR COMPOSITES (BLANK PAGE), P. 21.....249
13.22. CONNECTOR COMPOSITES (J33), P. 22.....250
13.23. CONNECTOR COMPOSITES (J40), P. 23.....251
13.24. CONNECTOR COMPOSITES (BLANK PAGE), P. 24.....252
13.25. CONNECTOR COMPOSITES (J41), P. 25.....253
13.26. CONNECTOR COMPOSITES (J44), P. 26.....254
13.27. CONNECTOR COMPOSITES (J45), P. 27.....255
13.28. CONNECTOR COMPOSITES (J45), P. 28.....256
13.29. CONNECTOR COMPOSITES (J46), P. 29.....257
13.30. CONNECTOR COMPOSITES (J46), P. 30.....258
13.31. CONNECTOR COMPOSITES (J48), P. 31.....259
13.32. CONNECTOR COMPOSITES (J49), P. 32.....260
13.33. CONNECTOR COMPOSITES (J50), P. 33.....261
13.34. CONNECTOR COMPOSITES (BLANK PAGE), P. 34.....262
13.35. CONNECTOR COMPOSITES (J51), P. 35.....263
13.36. CONNECTOR COMPOSITES (J52), P. 36.....264
13.37. CONNECTOR COMPOSITES (J52), P. 37.....265
13.38. CONNECTOR COMPOSITES (J53), P. 38.....266
13.39. CONNECTOR COMPOSITES (J54), P. 39.....267
13.40. CONNECTOR COMPOSITES (J55), P. 40.....268

13.41. CONNECTOR COMPOSITES (J56), P. 41.....269
13.42. CONNECTOR COMPOSITES (J56), P. 42.....270
13.43. CONNECTOR COMPOSITES (J57), P. 43.....271
13.44. CONNECTOR COMPOSITES (J57), P. 44.....272
13.45. CONNECTOR COMPOSITES (J58), P. 45.....273
13.46. CONNECTOR COMPOSITES (J58), P. 46.....274
13.47. CONNECTOR COMPOSITES (J60), P. 47.....275
13.48. CONNECTOR COMPOSITES (J61), P. 48.....276
13.49. CONNECTOR COMPOSITES (J62), P. 49.....277
13.50. CONNECTOR COMPOSITES (BLANK PAGE), P. 50.....278
13.51. CONNECTOR COMPOSITES (J66), P. 51.....279
13.52. CONNECTOR COMPOSITES (J67), P. 52.....280
13.53. CONNECTOR COMPOSITES (J68), P. 53.....281
13.54. CONNECTOR COMPOSITES (J70), P. 54.....282
13.55. CONNECTOR COMPOSITES (J71), (J72), P. 55.....283
13.56. CONNECTOR COMPOSITES (J73), P. 56.....284
13.57. CONNECTOR COMPOSITES (J74), P. 57.....285
13.58. CONNECTOR COMPOSITES (J75), P. 58.....286
13.59. CONNECTOR COMPOSITES (J75), P. 59.....287
13.60. CONNECTOR COMPOSITES (BLANK PAGE), P. 60.....288
13.61. CONNECTOR COMPOSITES (BLANK PAGE), P. 61.....289
13.62. CONNECTOR COMPOSITES (J87), P. 62.....290
13.63. CONNECTOR COMPOSITES (BLANK PAGE), P. 63.....291
13.64. CONNECTOR COMPOSITES (BLANK PAGE), P. 64.....292
13.65. CONNECTOR COMPOSITES (BLANK PAGE), P. 65.....293
13.66. CONNECTOR COMPOSITES (J109), P. 66.....294
13.67. CONNECTOR COMPOSITES (J110), P. 67.....295
13.68. CONNECTOR COMPOSITES (J111), P. 68.....296
13.69. CONNECTOR COMPOSITES (J112), P. 69.....297
13.70. CONNECTOR COMPOSITES (BLANK PAGE), P. 70.....298
13.71. CONNECTOR COMPOSITES (BLANK PAGE), P. 71.....299
13.72. CONNECTOR COMPOSITES (BLANK PAGE), P. 72.....300
13.73. CONNECTOR COMPOSITES (BLANK PAGE), P. 73.....301
13.74. CONNECTOR COMPOSITES (J530), P. 74.....302
13.75. CONNECTOR COMPOSITES (J540), P. 75.....303
13.76. CONNECTOR COMPOSITES (JA), P. 76.....304
13.77. CONNECTOR COMPOSITES (JB), P. 77.....305
13.78. CONNECTOR COMPOSITES (JC), P. 78.....306
13.79. CONNECTOR COMPOSITES (JD), P. 79.....307
13.80. CONNECTOR COMPOSITES (BLANK PAGE), P. 80.....308
13.81. CONNECTOR COMPOSITES (SS1), (SS2), P. 81.....309
13.82. CONNECTOR COMPOSITES (SS4), (SS5), P. 82.....310
13.83. CONNECTOR COMPOSITES (SS13), (SS30), P. 83.....311
13.84. CONNECTOR COMPOSITES (SS31), (SS32), P. 84.....312
13.85. CONNECTOR COMPOSITES (SS33), (SS34), P. 85.....313
13.86. CONNECTOR COMPOSITES (SS35), (SS36), P. 86.....314
13.87. CONNECTOR COMPOSITES (SS37), (SS38), P. 87.....315
13.88. CONNECTOR COMPOSITES (SS39), (SS40), P. 88.....316
13.89. CONNECTOR COMPOSITES (SS41), (SS52), P. 89.....317
13.90. CONNECTOR COMPOSITES (BLANK PAGE), P. 90.....318
13.91. CONNECTOR COMPOSITES (BLANK PAGE), P. 91.....319
13.92. CONNECTOR COMPOSITES (BLANK PAGE), P. 92.....320
13.93. CONNECTOR COMPOSITES (BLANK PAGE), P. 93.....321

13.94. CONNECTOR COMPOSITES (BLANK PAGE), P. 94.....322
13.95. CONNECTOR COMPOSITES (LEFT AND RIGHT DOME LIGHTS), P. 95.....323
13.96. CONNECTOR COMPOSITES (ES30), (ES32), P. 96.....324
13.97. CONNECTOR COMPOSITES (ES3), P. 97.....325
13.98. CONNECTOR COMPOSITES (1), (2), (5), (6), P. 98.....326
13.99. CONNECTOR COMPOSITES (7), (9), (10), P. 99.....327
13.100. CONNECTOR COMPOSITES (10), (11), (12), P. 100.....328
13.101. CONNECTOR COMPOSITES (12), (13), (14), P. 101.....329
13.102. CONNECTOR COMPOSITES (14), (15), (16), P. 102.....330
13.103. CONNECTOR COMPOSITES (17), (19), (20), (21), P. 103.....331
13.104. CONNECTOR COMPOSITES (22), (23), (24), P. 104.....332
13.105. CONNECTOR COMPOSITES (25), (26), (27), (28), P. 105.....333
13.106. CONNECTOR COMPOSITES (29), (30), (32), P. 106.....334
13.107. CONNECTOR COMPOSITES (32), (36), (37), (38), P. 107.....335
13.108. CONNECTOR COMPOSITES (C40), (40), P. 108.....336

1. ABBREVIATIONS, SYMBOLS, COMPONENTS, AND WIRE CHARTS (CHAPTER 1)

1.1. ABBREVIATIONS AND SYMBOLS, P. 1

INTERNATIONAL TRUCK AND ENGINE CORPORATION

THIS PRINT IS PROVIDED ON A RESTRICTED BASIS AND IS NOT TO BE USED IN ANY WAY DETRIMENTAL TO THE INTEREST OF INTERNATIONAL TRUCK AND ENGINE CORPORATION.

ELECTRICAL CIRCUIT DIAGRAM CHAPTER 1

ABBREVIATION AND SYMBOLS

COLOR ABBREVIATIONS

BLK	BLACK
BLU	BLUE
BRN	BROWN
GRA	GRAY
GRN	GREEN
ORN	ORANGE
PNK	PINK
RED	RED
VIO	VIOLET
WHT	WHITE
YEL	YELLOW

NOUN ABBREVIATIONS

C	SWITCH
CPC	SEALED CIRCULAR PLASTIC
ES	ECONOSEAL
DH	DISCONNECT HOUSING (MATE-N-LOCK)
LH	LATCH HOUSING (MATE-N-LOCK)
SC	SINGLE CIRCUIT
SS	SUPERSEALED
J	JUNCTION
K/O	KICK OUT WINDOW
P	PINS (MATE-N-LOCK)
RELAY'S	(FUNCTION) RELAY
S	SOCKETS (MATE-N-LOCK)
SW	SWITCH
AMP	AMPERAGE
CB	CIRCUIT BREAKER

SYMBOLS:

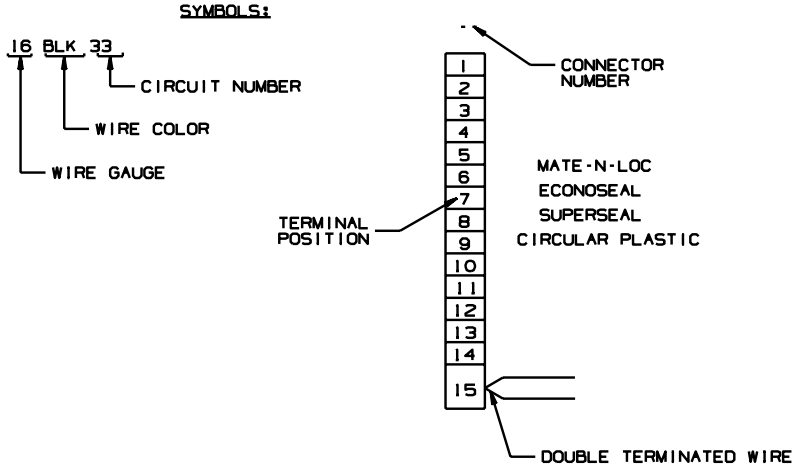

CHK	DATE	CHANGE	REV	REFERENCE	DRAWN 300152	NAME CIRCUIT DIAGRAM, RE BUS BODY
					RELEASE NO. 59856R	DATE 14DEC07 / PART NO. AE08-56299 / SHEET 001

Figure 1 Abbreviations and Symbols

1.2. ABBREVIATIONS AND SYMBOLS, P. 2

INTERNATIONAL TRUCK AND ENGINE CORPORATION

THIS PRINT IS PROVIDED ON A RESTRICTED BASIS AND IS NOT TO BE USED IN ANY WAY DETRIMENTAL TO THE INTEREST OF INTERNATIONAL TRUCK AND ENGINE CORPORATION.

ELECTRICAL CIRCUIT DIAGRAM CHAPTER 1

ABBREVIATION AND SYMBOLS

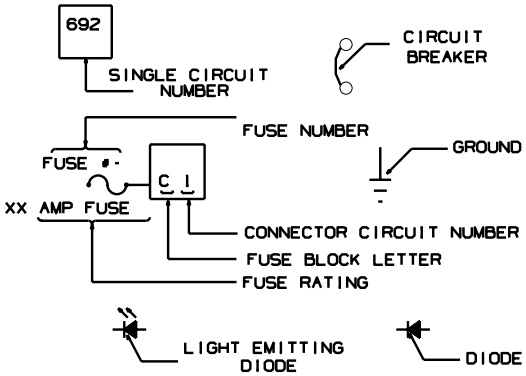

ELECTRICAL COMPONENTS:

454800271
454800272
454800273
454800274
454800275
454800276

WIRE REFERENCE OF GAUGE AND COLOR AND CIRCUIT :

454800280 - BLACK

454800281 - BLUE

454800282 - BROWN

454800283 - GRAY

454800284 - GREEN

454800285 - ORANGE

454800286 - PINK

454800287 - RED

454800288 - VIOLET

454800289 - WHITE

454800290 - YELLOW

CH#	DATE	CHANGE	REV	REFERENCE	DRAWN 300152	NAME CIRCUIT DIAGRAM, RE BUS BODY
					RELEASE NO. 59856R	DATE 14DEC07 PART NO. AE08-56299 SHEET 002

Figure 2 Abbreviations and Symbols

1.3. ELECTRICAL COMPONENT, P. 3

INTERNATIONAL TRUCK AND ENGINE CORPORATION

THIS PRINT IS PROVIDED ON A RESTRICTED BASIS AND IS NOT TO BE USED IN ANY WAY DETRIMENTAL TO THE INTEREST OF INTERNATIONAL TRUCK AND ENGINE CORPORATION.

ELECTRICAL CIRCUIT DIAGRAM CHAPTER 1

ELECTRICAL COMPONENT

RELAY'S

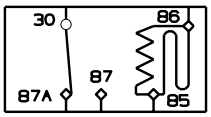

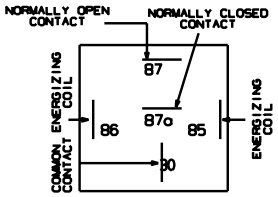

21012557C1
RELAY, GENERAL CONTROL

#1
RESET RELAY ON FLASHER PLATE (CROSSING GATE)

85	16 BLU 63
86	16 WHT
30	16 BLU 63
87	16 BLU 63
	16 BLU 63
87A	16 BLU 63

#2
LUGGAGE BOX

85	16 BRN 75
86	12 WHT 75
30	16 BLK 76
87	16 BLK 76
	16 BLK 76
87A	

#3
LIFT ENABLE

85	16 GRN 75
86	16 WHT
30	16 BLK 30
87	16 VIO 55
87A	

#4
STEP HEATER

85	RED 75
86	16 WHT
30	12 RED 75
87	12 RED 75
87A	

#5
NOISE KILL

85	16 BLK
86	16 WHT
30	16 BLK 75
87	16 BLK 75
87A	16 BLK 75

#6
LIFT DOOR LIGHT

85	16 GRN 67
86	16 WHT 55
30	16 BLK 30
	16 BLK 34
87	16 BRN 34
87A	

#7
IGNITION

85	16 BLK 40
	16 BLK 40
86	16 WHT 55
	16 WHT 55
30	16 BLK 30
	16 BLK 30
87	16 BLK 30
	16 BLK 30
87A	16 BLK 30

CHK	DATE	CHANGE	REV	REFERENCE	DRAWN 300152	NAME CIRCUIT DIAGRAM, RE BUS BODY	
					RELEASE NO. 59856R	DATE 14DEC07	PART NO. AE08-56299 SHEET 003

Figure 3 Electrical Component

1.4. ELECTRICAL COMPONENT, P. 4

INTERNATIONAL TRUCK AND ENGINE CORPORATION

THIS PRINT IS PROVIDED ON A RESTRICTED BASIS AND IS NOT TO BE USED IN ANY WAY DETRIMENTAL TO THE INTEREST OF INTERNATIONAL TRUCK AND ENGINE CORPORATION.

ELECTRICAL CIRCUIT DIAGRAM CHAPTER 1

ELECTRICAL COMPONENT

#8
1(CR)
NEW YORK OVERRIDE

85	16 WHT
	16 WHT
86	16 BLK 1
	16 BLK 1
30	16 BLU 63
	16 BLU 63
87	
87A	16 BLU 63

#9
2(CR)
NEW YORK OVERRIDE

85	16 WHT
86	16 BLK 1
30	12 BLK 54
	12 BLK 54
87	12 BRN 54
87A	

#10
PILOT LIGHT

85	16 WHT 75
86	16 BRN 83
30	16 BLK 75
87	16 BLK 75
87A	

#11
RESISTOR SUPPRESSED
(REMOTE CONTROL MIRROR)

85	16 BLK 40
86	16 WHT
30	16 BLK 36
87	16 BLK 36
87A	

#12
RELAY A
(VANDAL LOCK AIR DOOR)

85	16 BLK 25
	16 BLK 25
86	16 WHT
	16 WHT
30	16 BLK 25
	16 BLK 25
87	16 PNK
	16 PNK
87A	

#13
RELAY B
(VANDAL LOCK AIR DOOR)

85	16 BLK 25
86	16 WHT
	16 WHT
30	16 WHT
87	16 PNK 59
	16 PNK 59
87A	

#14
OVERRIDE SWITCH
(SEP CKT KY)

85	16 WHT
86	12 BRN 54
30	12 BLK 54
87	12 BRN 54
87A	

#15
OVERRIDE
(SIDE EMERGENCY DOOR
BOARDING LIGHT)

85	16 WHT
86	16 BRN 76
30	16 BLK 76
87	16 BRN 75
87A	

#16
1(CR)
BACK-UP LIGHT
(NJ)

85	16 BLK 75
	16 BLK 75
86	16 PNK 76
	16 PNK 76
30	16 VIO 75
87	16 BLK 75
87A	16 VIO 75

CHK	DATE	CHANGE	REV	REFERENCE	DRAWN	NAME
					300152	CIRCUIT DIAGRAM, RE BUS BODY
					RELEASE NO. 59856R	DATE 14DEC07 · PART NO. AE08-56299 · SHEET 004

Figure 4 Electrical Component

1.5. ELECTRICAL COMPONENT, P. 5

INTERNATIONAL TRUCK AND ENGINE CORPORATION

THIS PRINT IS PROVIDED ON A RESTRICTED BASIS AND IS NOT TO BE USED IN ANY WAY DETRIMENTAL TO THE INTEREST OF INTERNATIONAL TRUCK AND ENGINE CORPORATION.

ELECTRICAL CIRCUIT DIAGRAM CHAPTER 1

ELECTRICAL COMPONENT

#17
RR K/O WINDOW BUZZER
(NJ)

85	16 BLK 75
	16 BLK 75
86	16 PNK 76
30	16 WHT
87	16 PNK 5
87A	

#18
CROSSING GATE

85	16 BLU 63
86	16 WHT
30	16 BLU 63
87	16 BLU 63
	16 BLU 63
87A	16 BLU 63

#19
LH DOME LIGHT

85	16 PNK 75A
	16 PNK 75
86	16 BLK 30
	16 BLK 30
30	16 BRN 3A
87	16 BLK 30
	16 BLK 30
87A	16 BRN 3

#20
RH DOME LIGHT

85	16 PNK 75A
	16 PNK 75B
86	16 BLK 30
	16 BLK 30
	16 BLK C
30	16 BRN 33A
87	16 BLK 30
	16 BLK 30
	16 BLK C
	•16 BLK 30D
87A	16 BRN 33

#21
(RR DOME OR ACTIVITY
LIGHT RR DOOR ACTIVATED)
FE-ONLY

85	16 PNK 75B
86	16 BLK D
30	16 BRN 30B
87	16 BLK D
	16 BLK 30
	•16 BLK 30D
87A	16 BRN 30A

#22
PILOT LIGHT WARNING
(OPTIONAL)

85	16 WHT
86	RED 2
30	RED 1
	RED 4
87	ORN 8
87A	ORN 24

#23
(R6) HEADLIGHT SWITCH

85	16 GRN 75
86	16 WHT
30	12 BLK 75
87	12 RED 75
87A	16 VIO 55

#24
AIR DOOR
(CONTROLLED BY HEADLIGHTS)

85	16 BRN 83
86	16 WHT
30	16 BLK 20
87	16 YEL 2
87A	

#25
BOOSTER PUMP

85	16 RED 75
86	16 WHT
30	12 BLK 14
87	12 BLK 14
87A	

• DOME LT ACTIVATED BY ROCKER SW OR REAR EMER OR EXIT SW

CHK	DATE	CHANGE	REV	REFERENCE	DRAWN	NAME
					300152	CIRCUIT DIAGRAM, RE BUS BODY
					RELEASE NO. 59856R	DATE 14DEC07 · PART NO. AE08-56299 · SHEET 005

Figure 5 Electrical Component

1.6. ELECTRICAL COMPONENT, P. 6

INTERNATIONAL TRUCK AND ENGINE CORPORATION

THIS PRINT IS PROVIDED ON A RESTRICTED BASIS AND IS NOT TO BE USED IN ANY WAY DETRIMENTAL TO THE INTEREST OF INTERNATIONAL TRUCK AND ENGINE CORPORATION.

ELECTRICAL CIRCUIT DIAGRAM CHAPTER 1

ELECTRICAL COMPONENT

#26
(R1) DOME LIGHTS

85	16 BRN 83
	16 BRN 83
86	16 WHT
30	12 BLK 3
87	12 BLK 3
87A	

#27
AIR HORN

85	16 RED 75
86	16 WHT
30	12 BLK 14
87	12 BLK 14
87A	

#28
(A) HEADLIGHTS ISOLATOR

85	16 GRN 75
	16 GRN 75
86	16 WHT
30	16 VIO 75
87	16 GRN 75
87A	16 RED 75

#29
(B) HEADLIGHTS ON SENSE RELAY

85	16 VIO 75
86	16 WHT
30	16 BLK 75
87	16 BRN 75
87A	

#30
IGNITION RELAY

85	16 BLK 40
	•16 BLK 40
86	16 WHT 55
30	16 BLK 30
	•16 BLK 30
87	16 BLK 30
	•16 BLK 30
87A	

#31
LIFT KEY 'OFF' RELAY

85	16 BLK 40
86	16 WHT 59
30	16 BLK 30
87	
87A	16 BLK 30

#32
XMSN SHIFT INHIBIT RELAY

85	16 VIO 55
86	16 WHT 55
	16 WHT 55
30	16 ORN 55
87	
87A	16 ORN 55

#33
LIFT DOOR LIGHT RELAY

85	•16 WHT 55
	16 YEL 34
86	16 BLK 34
	16 BLK 34
30	16 BLK 34
87	•16 GRN 67
	•16 BRN 34
87A	&16 BRN 34

#34
XMSN INTERLOCK RELAY

85	16 VIO 55
86	16 WHT 55
30	16 ORN 55
87	16 ORN 55
87A	

• FOR LIFT DOOR INTERLOCK -PARK BRAKE INTERLOCK W/49GMM
& FOR LIFT DOOR INTERLOCK -PARK BRAKE INTERLOCK W/49GLZ

CHK	DATE	CHANGE	REV	REFERENCE	DRAWN 300152	NAME CIRCUIT DIAGRAM, RE BUS BODY
					RELEASE NO. 59856R	DATE 14DEC07 · PART NO. AE08-56299 · SHEET 006

Figure 6 Electrical Component

1.7. ELECTRICAL COMPONENT, P. 7

INTERNATIONAL TRUCK AND ENGINE CORPORATION

THIS PRINT IS PROVIDED ON A RESTRICTED BASIS AND IS NOT TO BE USED IN ANY WAY DETRIMENTAL TO THE INTEREST OF INTERNATIONAL TRUCK AND ENGINE CORPORATION.

ELECTRICAL CIRCUIT DIAGRAM CHAPTER 1

ELECTRICAL COMPONENT

#35
RELAY1
WARNING LIGHTS-FLORIDA

85	16 WHT 70
	12 WHT 70
86	16 RED 30
30	12 BRN 54
87	12 RED 30
	16 RED 30
87A	

#36
RELAY 2
WARNING LIGHTS-FLORIDA

85	16 WHT
	12 WHT 1
86	16 BLU 63
	16 BLU 63
30	16 BLU 63
87	16 BLU 66
87A	

#37
RELAY 3
WARNING LIGHTS-FLORIDA

85	16 WHT
86	16 BLU 68
	16 BLU 67
30	16 BLU 63
87	
87A	16 BLU 63

#38
WARNING LIGHTS-VIRGINIA

85	16 WHT
86	16 PNK 63
	16 PNK 63
30	16 RED 63
	16 RED 63
87	16 PNK 63
	16 PNK 63
87A	16 RED 63

#39
WARNING LIGHTS-MARYLAND

85	16 WHT A
86	16 BLU 63
30	16 RED 54
	16 RED 1
87	16 ORN 8A
87A	16 ORN 24A

#40
AIR CROSSING GATE
RESET RELAY

85	16 BLU 63D
86	16 WHT
30	16 BLU 63B
87	16 BLU 63D
	16 BLU 63C
87A	16 BLU 63E

#41
DOOR SWITCH RELAY 'A'
(TOGGLE SW FOR ELECTRIC
ENTRANCE DOOR-FAIRFAX)

85	16 WHT A
	16 WHT B
86	16 BLK 1
30	16 WHT
	16 WHT A
87	
87A	16 WHT 70

#42
STEP LIGHT RELAY 'B'
(TOGGLE SW FOR ELECTRIC
ENTRANCE DOOR-FAIRFAX)

85	16 WHT B
	16 WHT C
86	16 BLK 38
30	16 BRN 38
87	16 BRN 38A
87A	

#43
GROUND SW RELAY 'D'
(TOGGLE SW FOR ELECTRIC
ENTRANCE DOOR-FAIRFAX)

85	16 WHT F
	16 WHT E
86	16 BLK 38A
	16 BLK 38B
30	16 WHT E
	16 WHT D
87	16 WHT 4
87A	16 WHT 59

CHK	DATE	CHANGE	REV	REFERENCE	DRAWN	NAME
					300152	CIRCUIT DIAGRAM, RE BUS BODY
					RELEASE NO. 59856R	DATE 14DEC07 / PART NO. AE08-56299 / SHEET 007

Figure 7 Electrical Component

1.8. ELECTRICAL COMPONENT, P. 8

INTERNATIONAL TRUCK AND ENGINE CORPORATION

THIS PRINT IS PROVIDED ON A RESTRICTED BASIS AND IS NOT TO BE USED IN ANY WAY DETRIMENTAL TO THE INTEREST OF INTERNATIONAL TRUCK AND ENGINE CORPORATION.

ELECTRICAL CIRCUIT DIAGRAM CHAPTER 1

ELECTRICAL COMPONENT

#44
POWER SW RELAY 'C'
(TOGGLE SW FOR ELECTRIC ENTRANCE DOOR-FAIRFAX)

85	16 WHT C
	16 WHT D
86	16 BLK 83
	16 BLK 83A
30	16 BLK 32
87	16 BLK 32A
87A	16 BLK 4

#45
GROUND CONTROL RELAY 'E'
(TOGGLE SW FOR ELECTRIC ENTRANCE DOOR-FAIRFAX)

85	16 WHT F
	16 WHT G
86	16 BLK 75
	16 BLK 75A
30	16 WHT 4
87	16 BLU 5
87A	16 RED 5

#46
POWER CONTROL RELAY 'F'
(TOGGLE SW FOR ELECTRIC ENTRANCE DOOR-FAIRFAX)

85	16 WHT G
86	16 BLK 75A
30	16 BLK 32A
87	16 RED 6
	16 RED 6A
87A	16 BLU 6
	16 BLU 6A

#47
STROBE LIGHT RELAY

85	16 BLU 63
86	16 WHT
30	16 BLK 63
87	16 BLU 63•
	16 BLU 63A#
87A	

#48
STEPWELL LIGHT HEATER

85	GND
86	ORN
30	BRN
87	BLK
87A	

#49
STE LIGHT / CLEARANCE LIGHT RELAY

85	16 WHT
86	16 BRN 38
30	16 BLK 2
87	16 YEL 2
	16 BRN 38
87A	

• STOP ARM WITH STROBE LIGHT-AIR-REAR
STOP ARM WITH STROBE LIGHT-ELECTRIC-REAR

CHK	DATE	CHANGE	REV	REFERENCE	DRAWN 300152	NAME CIRCUIT DIAGRAM, RE BUS BODY	
					RELEASE NO. 59856R	DATE 14DEC07	PART NO. AE08-56299 SHEET 008

Figure 8 Electrical Component

1.9. STOP ARM — ELECTRIC (W/ CANCEL SWITCH), P. 9

INTERNATIONAL TRUCK AND ENGINE CORPORATION

THIS PRINT IS PROVIDED ON A RESTRICTED BASIS AND IS NOT TO BE USED IN ANY WAY DETRIMENTAL TO THE INTEREST OF INTERNATIONAL TRUCK AND ENGINE CORPORATION.

ELECTRICAL CIRCUIT DIAGRAM CHAPTER 1

STOP ARM - ELECTRIC (W/CANCEL SWITCH)

SYMBOL	DESCRIPTION
	MALE/FEMALE IN-LINE CONNECTION
	FEMALE TERMINAL
	MALE TERMINAL
	GROUND
	FUSE
	LIGHT EMITTING DIODE
	RESISTOR
	SWITCH CONTACT NORMALLY OPEN
	SWITCH CONTACT NORMALLY CLOSED
	JUNCTION POINT
	SPLICE
	SWITCH-PRESSURE
	SWITCH MANUAL/MECHANICAL
	SOLENOID GENERAL USAGE
	CIGAR LIGHTER

SYMBOL	DESCRIPTION
	MOTOR - ELECTRIC
30, 86, 87, 87A, 85; NORMALLY OPEN CONTACT, NORMALLY CLOSED CONTACT, COMMON CONTACT, ENERGIZING COIL, ENERGIZING COIL	RELAY-SUPPRESSED
	HORN/BUZZER
	SPEAKER - SOUND SYSTEM
	MAGNETIC SWITCH
	LIGHT - SINGLE FILAMENT
	LIGHT - DOUBLE FILAMENT
1, 2	SENDER-OIL, WATER, FUEL, TEMPERATURE

CHK	DATE	CHANGE	REV	REFERENCE	DRAWN	NAME
					300152	CIRCUIT DIAGRAM, RE BUS BODY
					RELEASE NO. 59856R	DATE 14DEC07 / PART NO. AE08-56299 / SHEET 009

Figure 9 Stop Arm — Electric (w/ Cancel Switch

1.10. SCHEMATIC SYMBOL CHART, P. 10

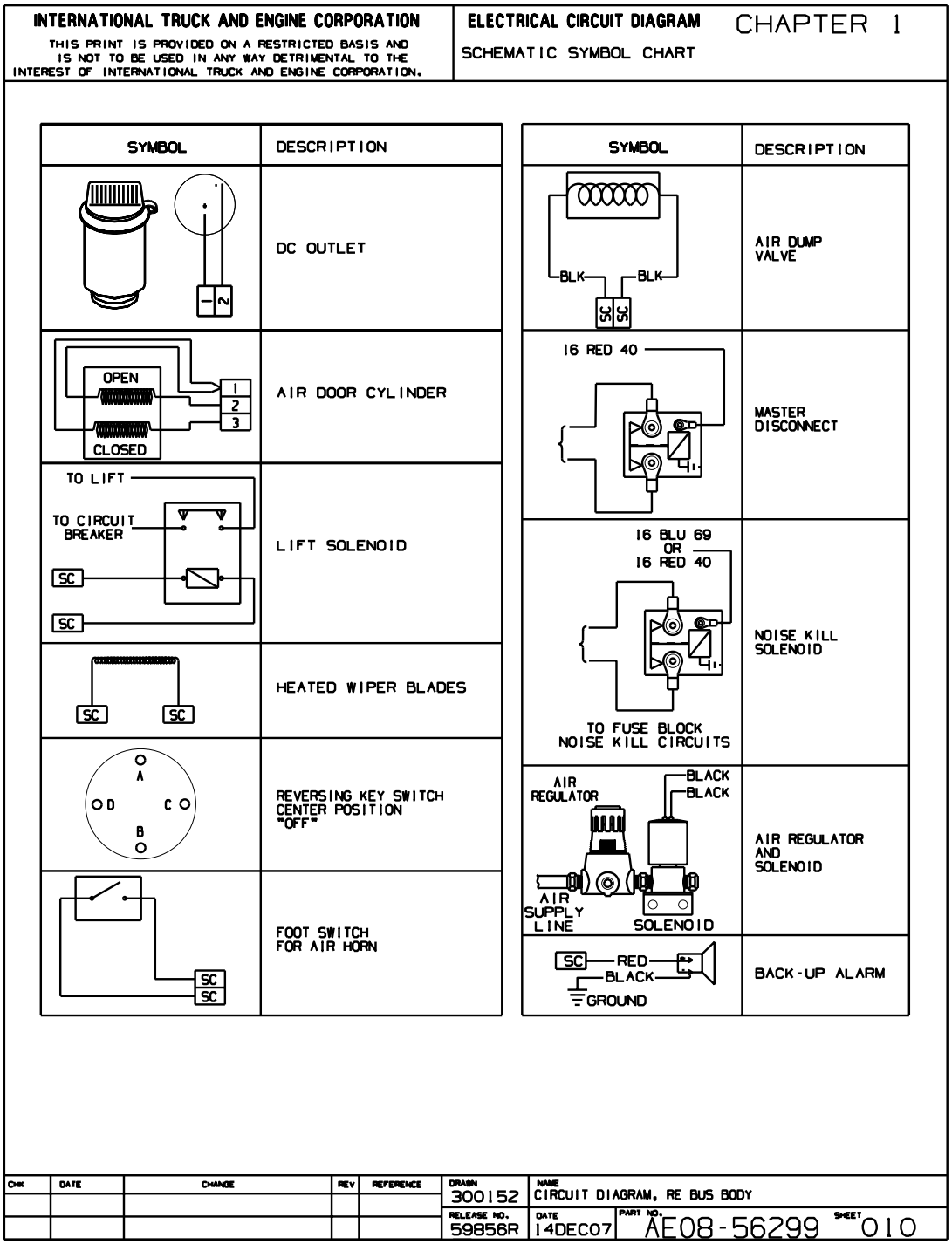

Figure 10 Schematic Symbol Chart

1.11. SCHEMATIC SYMBOL CHART, P. 11

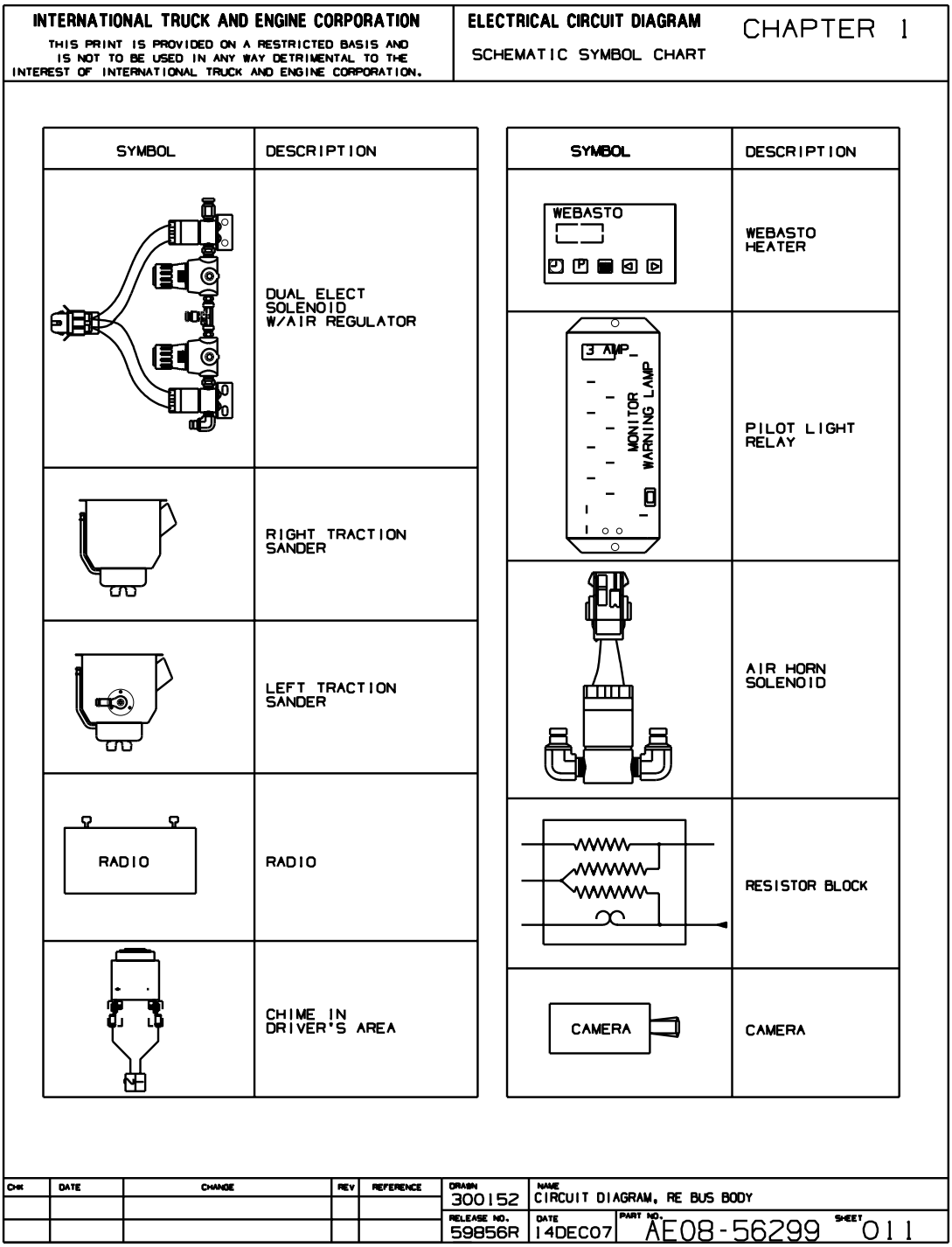

Figure 11 Schematic Symbol Chart

1.12. SCHEMATIC SYMBOL CHART, P. 12

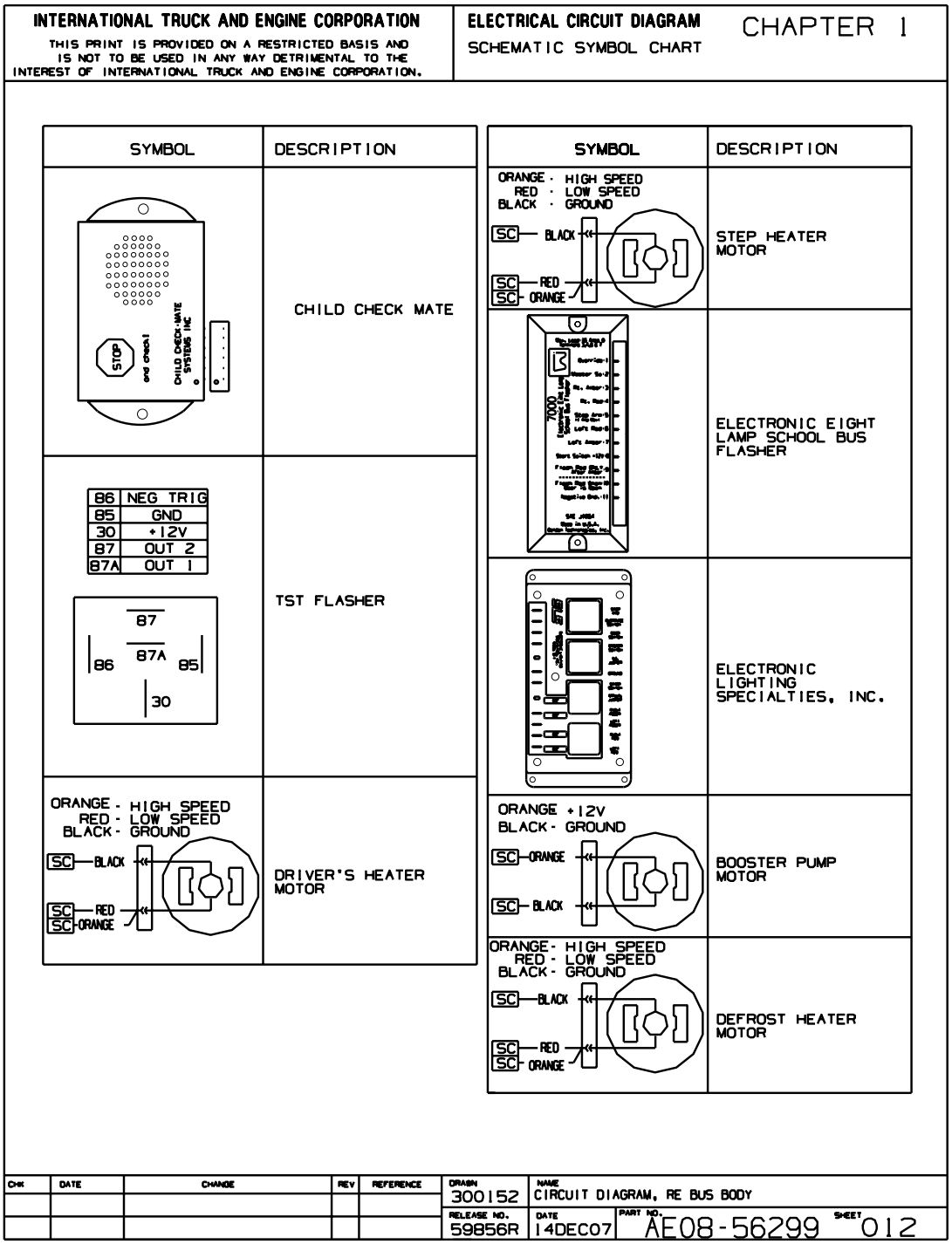

Figure 12 Schematic Symbol Chart

1.13. SCHEMATIC SYMBOL CHART, P. 13

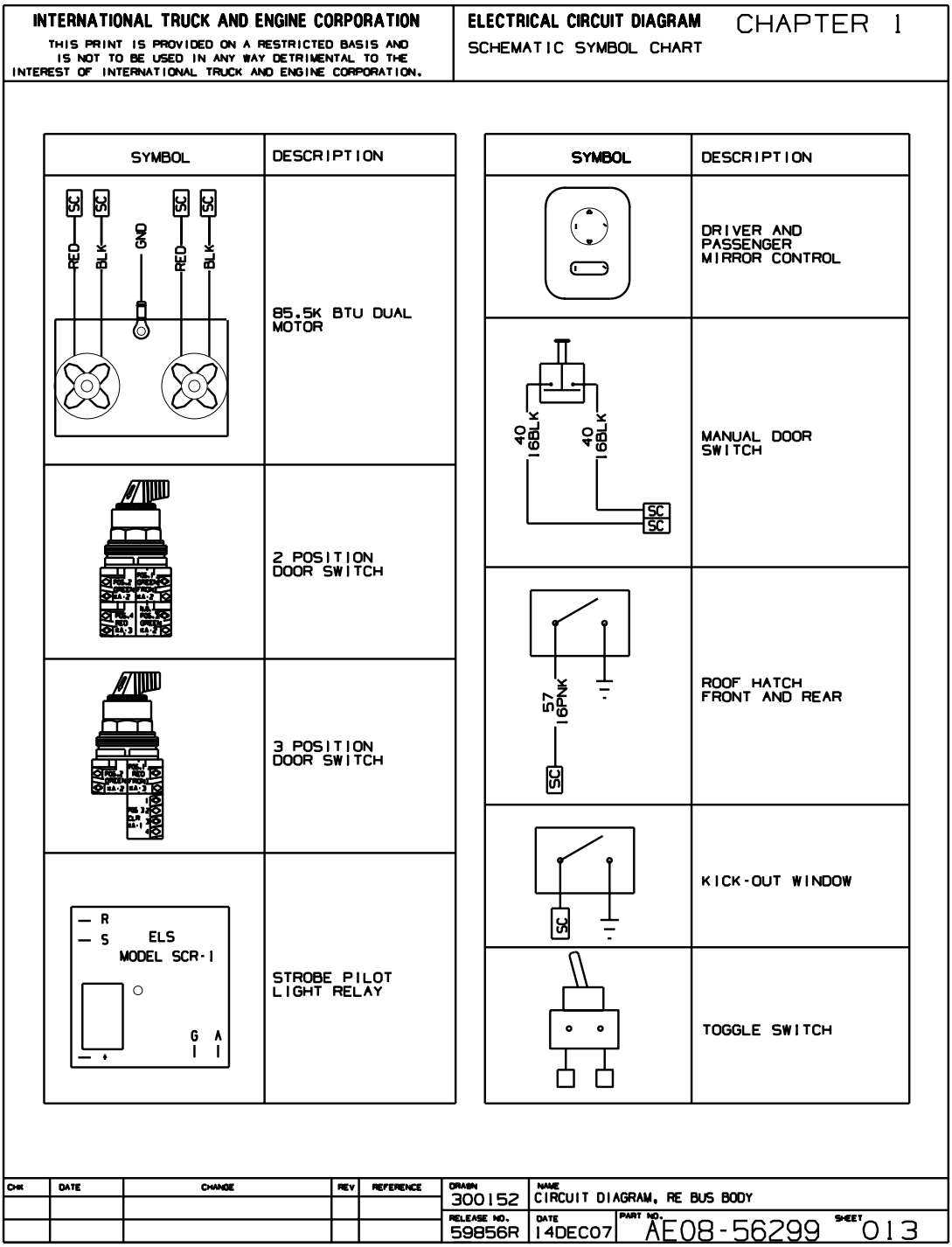

Figure 13 Schematic Symbol Chart

1.14. SCHEMATIC SYMBOL CHART, P. 14

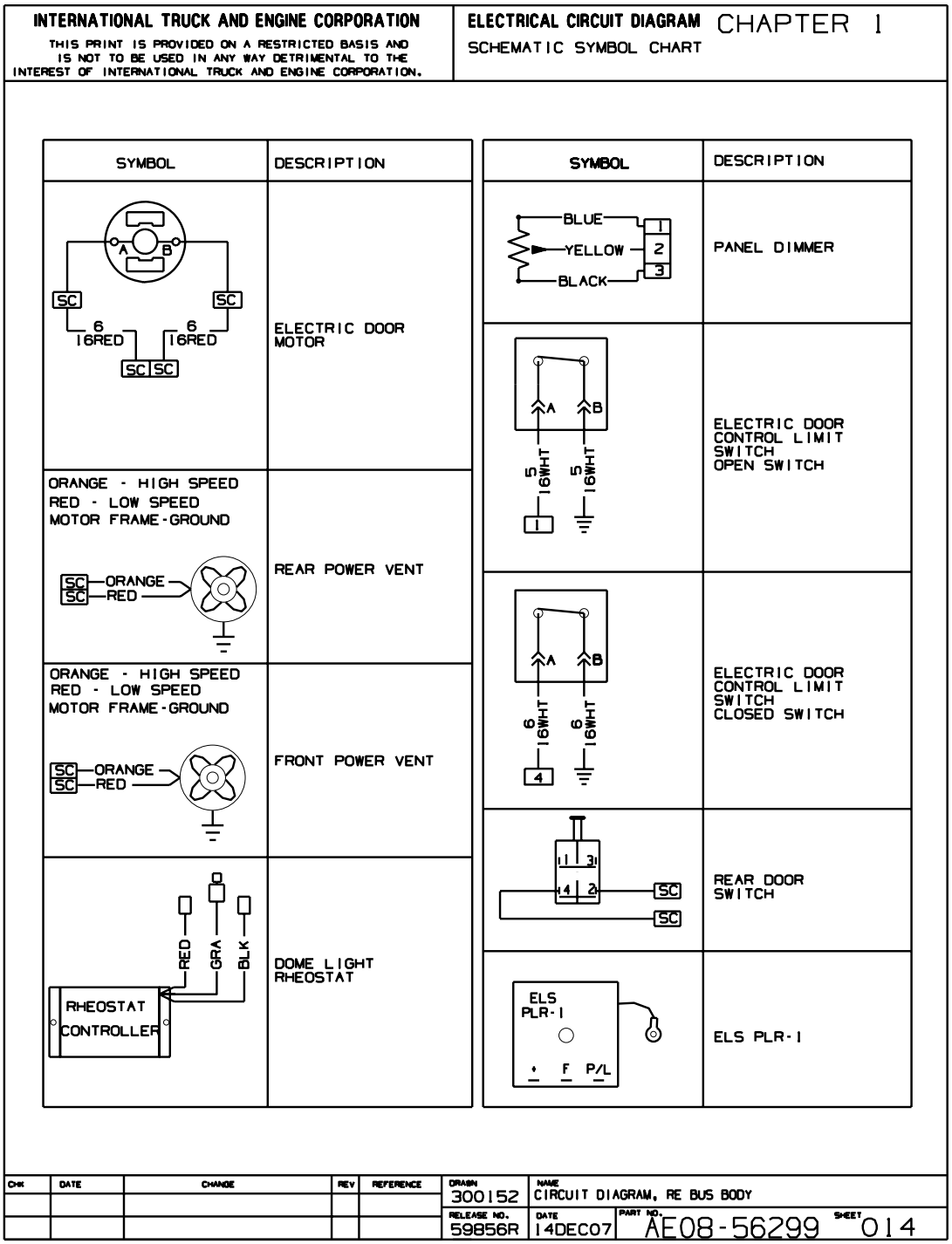

Figure 14 Schematic Symbol Chart

1.15. SCHEMATIC SYMBOL CHART, P. 15

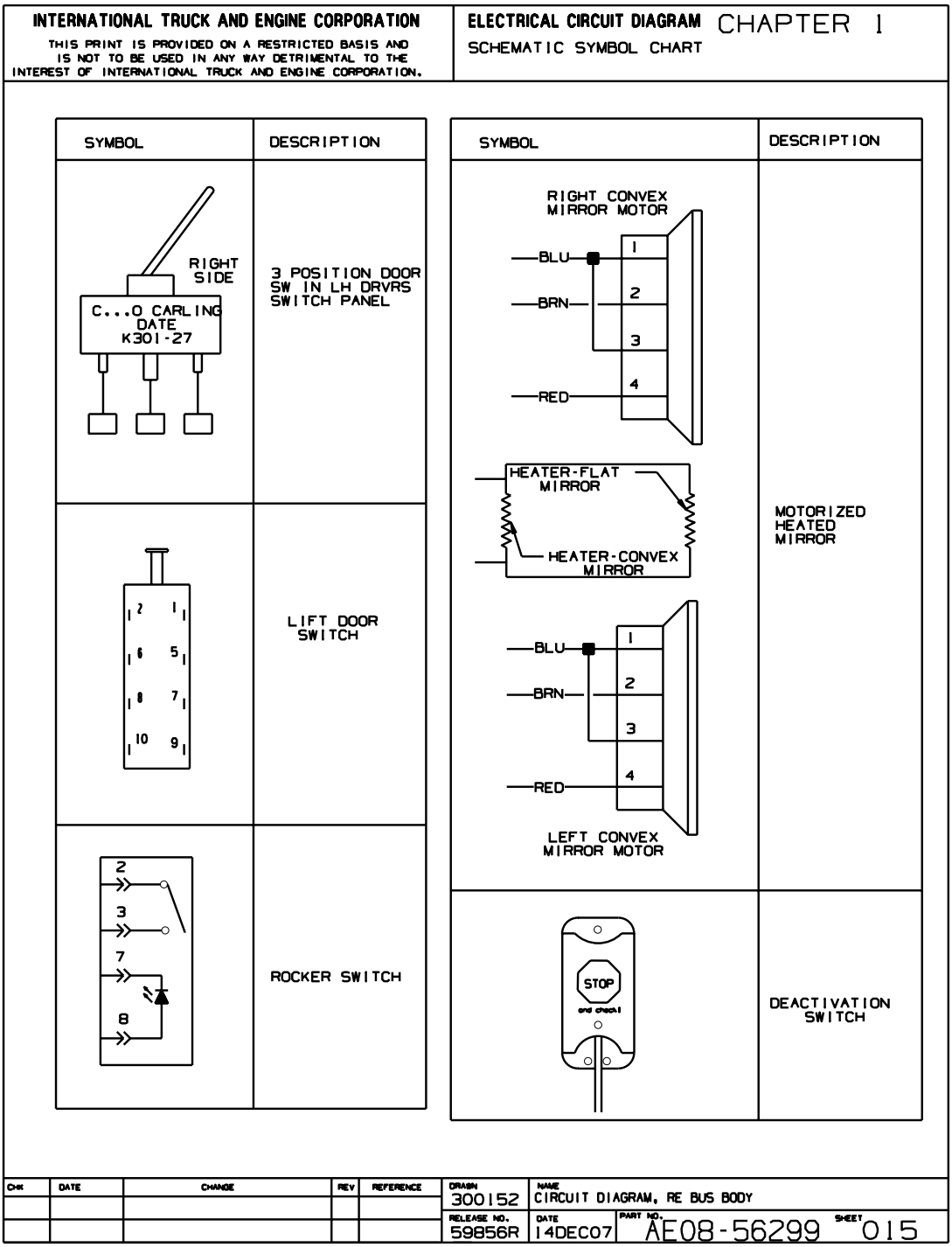

Figure 15 Schematic Symbol Chart

1.16. WIRE REFERENCE OF GAUGE AND COLOR AND CIRCUIT, P. 16

INTERNATIONAL TRUCK AND ENGINE CORPORATION

THIS PRINT IS PROVIDED ON A RESTRICTED BASIS AND IS NOT TO BE USED IN ANY WAY DETRIMENTAL TO THE INTEREST OF INTERNATIONAL TRUCK AND ENGINE CORPORATION.

ELECTRICAL CIRCUIT DIAGRAM CHAPTER 1

WIRE REFERENCE OF GAUGE & COLOR AND CIRCUIT

BLACK

12GA			
CKT #	DESCRIPTION	CKT #	DESCRIPTION
		50	
1	FEED-F.B. TO WARNING LIGHTS	51	
2	FEED-F.B. TO BOTTOM STEP HEATER RELAY	52	
3		53	
4		54	FEED-F.B. TO OVERRIDE SWITCH
5	FEED-LEFT HAND DEFOG FAN SWITCH	55	
6		56	
7	FEED-FRONT HEATER HI SPEED	57	
8	FEED-FRONT HEATER MEDIUM SPEED	58	
9	FEED-DRIVER'S HEATER FAN SWITCH	59	
10	FEED-F.B. TO LEFT MIDSHIP HEATER SW	60	FEED-F.B. TO RIGHT MIDSHIP HEATER SW
11	FEED-F.B. TO LEFT REAR HEATER SW	61	FEED-F.B. TO RIGHT REAR HEATER SW
12	FEED-F.B. TO WINDSHIELD WIPERS	62	
13	FEED-F.B. TO RIGHT WINDSHIELD WIPERS	63	
14	FEED-BOOSTER PUMP SWITCH	64	
15		65	FEED-AIR COMPRESSOR RELAY
16		66	
17		67	
18		68	
19		69	
20		70	
21		71	
22	FEED-F.B. TO DC OUTLET	72	
23		73	
24		74	
25		75	FEED-HEADLIGHT SWITCH
26		76	
27		77	
28		78	
29		79	
30		80	
31	FEED-LEFT OF DRIVER DEFOG BLOWER	81	
32		82	
33		83	
34		84	
35		85	
36		86	
37		87	
38		88	
39		89	
40		90	
41		91	
42	FEED-SANDER SWITCH	92	
43		93	
44		94	
45		95	
46		96	
47		97	
48		98	
49		99	

MISCELLANEOUS		
GA	CKT#	DESCRIPTION
4	—	FEED-STD CABLE
2	—	FEED-INVALIFT CABLE
2/0	—	BATTERY DIS SWITCH CABLE

BLACK

TO SHEET 17...

CHK	DATE	CHANGE	REV	REFERENCE	DRAWN 300152	NAME CIRCUIT DIAGRAM, RE BUS BODY	
					RELEASE NO. 59856R	DATE 14DEC07	PART NO. AE08-56299 SHEET 016

Figure 16 Wire Reference of Gauge and Color and Circuit

1.17. WIRE REFERENCE OF GAUGE AND COLOR AND CIRCUIT, P. 17

INTERNATIONAL TRUCK AND ENGINE CORPORATION

THIS PRINT IS PROVIDED ON A RESTRICTED BASIS AND IS NOT TO BE USED IN ANY WAY DETRIMENTAL TO THE INTEREST OF INTERNATIONAL TRUCK AND ENGINE CORPORATION.

ELECTRICAL CIRCUIT DIAGRAM CHAPTER 1

WIRE REFERENCE OF GAUGE & COLOR AND CIRCUIT

FROM SHEET 16...

BLACK

16GA

CKT #	DESCRIPTION	CKT #	DESCRIPTION
—		50	FEED-FOG LIGHTS
1	FEED-REVERSE MOTION SENSOR	51	
2	FEED-CLEARANCE / CLUSTER LIGHT	52	
3	FEED-LEFT SIDE DOME LIGHT SWITCH	53	
4	FEED MANUAL ENTRANCE DOOR VANDAL LOCK KEY SWITCH	54	FEED-OVERRIDE SWITCH
		55	FEED-IGNITION KEY OFF LIFT RELAY
	FEED AIR ENTRANCE DOOR VANDAL LOCK KEY SWITCH	56	
		57	
5	FEED-LEFT SIDE FAN	58	
6	FEED-RIGHT HAND DEFOG FAN SWITCH	59	
7		60	RETARD ON / OFF
8		61	RETARD HIGH / LOW
9		62	FEED-AIR HORN SOLENOID VALVE
10		63	FEED-STOP ARM
11		64	
12	FEED-WINDSHIELD WIPERS	65	
13		66	
14	FEED-HEATED MIRROR	67	
15	FEED-RIGHT SIDE DOME LIGHT SWITCH	68	
16	FEED-TO STOBE LIGHT SWITCH	69	
17	FEED-F.B. TO LIGHT MONITOR	70	
18	FEED-DESTINATION SIGN	71	
19	FEED-DUMP VALVE SWITCH	72	
20	FEED-AIR DOOR SOLENOID	73	
21	LEFT BODY HARNESS	74	
22	FEED-DC OUTLET	75	FEED - +12V (RIGHT HAND BODY)
23	FEED-POWER VENT FRONT AND REAR	76	FEED - DOOR OPEN LIGHT
24	FEED -ACTIVITY LIGHT SWITCH	77	
25	FEED-DUMP VALVE SWITCH	78	
26		79	
27		80	
28		81	
29		82	
30	F.B. LIFT RELAY/ENGINE COMP. LIGHTS	83	FEED-IGNITIION & RH SW PANEL SWITCHES
31	FEED-F.B.TO HEATED WIPER BLADES SWITCH	84	
32	FEED-ELECTRIC DOOR SYSTEM POWER	85	
33	FEED-CAMERA RELAY / SWITCH	86	
34	FEED LIFT DOOR LIGHTS	87	
35	FEED-F.B.TO LUGGAGE COMP. LIGHT SWITCH	88	
36	FEED-REMOTE MOTORIZED MIRROR	89	
37	FEED-SWITCH ILLUMINATION DIMMER CONTROL	90	
38	DOOR SWITCH (DOOR OPEN)	91	
39		92	
40	IGNITION / ACCESSORY POWER	93	
41	FEED-RADIO MEMORY	94	
42	FEED-RADIO POWER	95	
43		96	
44		97	
45	BUZZER ALWAYS HOT	98	
46	FEED-ALTERNATE ENTRANCE DOOR "OPEN"	99	
47	FEED-ALTERNATE ENTRANCE DOOR "CLOSE"		
48	FEED-ALTERNATE ENTRANCE DOOR"DUMPVALVE"		
49			

BLACK

CHK	DATE	CHANGE	REV	REFERENCE	DRAWN	NAME
					300152	CIRCUIT DIAGRAM, RE BUS BODY
					RELEASE NO. 59856R	DATE 14DEC07 · PART NO. AE08-56299 · SHEET 017

Figure 17 Wire Reference of Gauge and Color and Circuit

1.18. WIRE REFERENCE OF GAUGE AND COLOR AND CIRCUIT, P. 18

INTERNATIONAL TRUCK AND ENGINE CORPORATION

THIS PRINT IS PROVIDED ON A RESTRICTED BASIS AND IS NOT TO BE USED IN ANY WAY DETRIMENTAL TO THE INTEREST OF INTERNATIONAL TRUCK AND ENGINE CORPORATION.

ELECTRICAL CIRCUIT DIAGRAM CHAPTER1

WIRE REFERENCE OF GAUGE & COLOR AND CIRCUIT

BLUE

12GA			
CKT #	DESCRIPTION	CKT #	DESCRIPTION
—		50	
1		51	
2		52	
3		53	
4		54	
5		55	
6		56	
7		57	
8		58	
9		59	
10		60	
11		61	
12		62	
13		63	
14		64	
15		65	AIR COMPRESSOR
16		66	
17		67	
18		68	
19		69	
20		70	
21		71	
22	LEFT MIDSHIP HEATER (LOW)	72	
23		73	
24	RIGHT MIDSHIP HEATER (LOW)	74	
25		75	
26		76	
27		77	
28		78	
29		79	
30		80	
31		81	
32		82	
33	LEFT REAR HEATER (LOW)	83	
34		84	
35		85	
36		86	
37	RIGHT REAR HEATER (LOW)	87	
38	RIGHT REAR HEATER (HI)	88	
39		89	
40		90	
41		91	
42	DRIVER'S HEATER (LOW)	92	
43		93	
44	BOOSTER PUMP	94	
45		95	
46		96	
47		97	
48		98	
49		99	

BLUE

TO SHEET 19...

CHK	DATE	CHANGE	REV	REFERENCE	DRAWN 300152	NAME CIRCUIT DIAGRAM, RE BUS BODY	
					RELEASE NO. 59856R	DATE 14DEC07	PART NO. AE08-56299 SHEET 018

Figure 18 Wire Reference of Gauge and Color and Circuit

1.19. WIRE REFERENCE OF GAUGE AND COLOR AND CIRCUIT, P. 19

INTERNATIONAL TRUCK AND ENGINE CORPORATION

THIS PRINT IS PROVIDED ON A RESTRICTED BASIS AND IS NOT TO BE USED IN ANY WAY DETRIMENTAL TO THE INTEREST OF INTERNATIONAL TRUCK AND ENGINE CORPORATION.

ELECTRICAL CIRCUIT DIAGRAM CHAPTER 1

WIRE REFERENCE OF GAUGE & COLOR AND CIRCUIT

FROM SHEET 18...

BLUE

16GA

CKT #	DESCRIPTION	CKT #	DESCRIPTION
—		50	FOG LIGHTS
1		51	
2		52	
3		53	
4		54	
5	ELE. DOOR MOTOR,AIR DOOR VANDAL LOCK	55	
6	ELE. DOOR MOTOR,AIR DOOR VANDAL LOCK	56	
7		57	
8		58	PARK BRAKE SOLENOID
9		59	
10	DESTINATION SIGN	60	
11		61	
12		62	
13		63	SIGNAL STOP ARM EXTEND
14		64	STROBE LIGHT
15		65	
16		66	CHIME
17		67	WARNING LIGHT (FLORIDA)
18		68	REAR STOP ARM (OPTIONAL)
19		69	NOISE KILL SOLENOID "ON" SIGNAL
20		70	
21		71	
22	FRONT POWER VENT (LOW)	72	
23	REAR POWER VENT (LOW)	73	
24		74	
25		75	SPARE WIRE
26		76	
27		77	
28		78	
29		79	
30		80	
31		81	
32		82	
33		83	LEFT BACKUP LIGHTS/BACKING ALARM
34		84	RIGHT BACKUP LIGHTS
35		85	
36		86	
37		87	
38		88	
39	DEACTIVATION SWITCH	89	
40		90	
41		91	
42		92	
43	RIGHT HAND SPEAKER (-)	93	
44	RIGHT HAND SPEAKER (+)	94	
45		95	
46		96	
47		97	
48		98	
49		99	

BLUE

CHK	DATE	CHANGE	REV	REFERENCE	DRAWN 300152	NAME CIRCUIT DIAGRAM, RE BUS BODY
					RELEASE NO. 59856R	DATE 14DEC07 PART NO. AE08-56299 SHEET 019

Figure 19 Wire Reference of Gauge and Color and Circuit

1.20. WIRE REFERENCE OF GAUGE AND COLOR AND CIRCUIT, P. 20

INTERNATIONAL TRUCK AND ENGINE CORPORATION

THIS PRINT IS PROVIDED ON A RESTRICTED BASIS AND IS NOT TO BE USED IN ANY WAY DETRIMENTAL TO THE INTEREST OF INTERNATIONAL TRUCK AND ENGINE CORPORATION.

ELECTRICAL CIRCUIT DIAGRAM CHAPTER 1

WIRE REFERENCE OF GAUGE & COLOR AND CIRCUIT

BROWN

12GA			
CKT #	DESCRIPTION	CKT #	DESCRIPTION
		50	
1		51	
2		52	
3		53	
4		54	OVERRIDE SWITCH
5		55	
6		56	
7		57	
8		58	
9		59	
10		60	
11		61	
12		62	
13		63	
14		64	
15		65	
16		66	
17		67	
18		68	
19		69	
20		70	
21		71	
22		72	
23		73	
24		74	
25		75	+12V SWITCHED
26		76	
27		77	
28		78	
29		79	
30		80	
31		81	
32		82	
33		83	
34		84	
35		85	
36		86	
37		87	
38		88	
39		89	
40		90	
41		91	
42		92	
43		93	
44		94	
45		95	
46		96	
47		97	
48		98	
49		99	

BROWN

TO SHEET 21...

CHK	DATE	CHANGE	REV	REFERENCE	DRAWN 300152	NAME CIRCUIT DIAGRAM, RE BUS BODY	
					RELEASE NO. 59856R	DATE 14DEC07	PART NO. AE08-56299 SHEET 020

Figure 20 Wire Reference of Gauge and Color and Circuit

1.21. WIRE REFERENCE OF GAUGE AND COLOR AND CIRCUIT, P. 21

INTERNATIONAL TRUCK AND ENGINE CORPORATION

THIS PRINT IS PROVIDED ON A RESTRICTED BASIS AND IS NOT TO BE USED IN ANY WAY DETRIMENTAL TO THE INTEREST OF INTERNATIONAL TRUCK AND ENGINE CORPORATION.

ELECTRICAL CIRCUIT DIAGRAM CHAPTER 1

WIRE REFERENCE OF GAUGE & COLOR AND CIRCUIT

FROM SHEET 20...

BROWN

16GA

CKT #	DESCRIPTION	CKT #	DESCRIPTION
—		50	
1		51	
2		52	
3	DOME LIGHTS LEFT OR FRONT	53	REAR ROW DOME LIGHTS
4		54	OVERRIDE ROCKER SWITCH
5		55	ENGINE COMPARTMENT LIGHTS
6		56	
7		57	
8		58	
9		59	
10		60	
11		61	
12		62	
13		63	
14		64	
15		65	
16		66	
17		67	
18		68	
19		69	
20		70	LEFT AND RIGHT FRONT DIRECTIONAL LIGHT
21		71	
22		72	
23		73	
24		74	
25		75	DRIVER'S DOME LIGHT
26		76	ALTERNATE ENTRANCE DOOR LIGHT
27		77	
28		78	
29		79	
30	ACTIVITY LIGHT	80	
31		81	
32		82	
33	DOME LIGHTS RIGHT OR REAR	83	LEFT STOP AND TAIL LIGHTS
34	LIFT LIGHT	84	RIGHT STOP AND TAIL LIGHTS
35	LUGGAGE LIGHTS	85	
36	DRIVER'S DOME	86	
37		87	
38	STEP LIGHT/ALTERNATE ENTRANCE DOOR	88	
39		89	
40		90	
41		91	
42		92	
43		93	
44		94	
45		95	
46		96	
47		97	
48		98	
49		99	

BROWN

CHK	DATE	CHANGE	REV	REFERENCE	DRAWN 300152	NAME CIRCUIT DIAGRAM, RE BUS BODY	
					RELEASE NO. 59856R	DATE 14DEC07	PART NO. AE08-56299 SHEET 021

Figure 21 Wire Reference of Gauge and Color and Circuit

1.22. WIRE REFERENCE OF GAUGE AND COLOR AND CIRCUIT, P. 22

INTERNATIONAL TRUCK AND ENGINE CORPORATION

THIS PRINT IS PROVIDED ON A RESTRICTED BASIS AND IS NOT TO BE USED IN ANY WAY DETRIMENTAL TO THE INTEREST OF INTERNATIONAL TRUCK AND ENGINE CORPORATION.

ELECTRICAL CIRCUIT DIAGRAM CHAPTER 1

WIRE REFERENCE OF GAUGE & COLOR AND CIRCUIT

GRAY

12GA			
CKT #	DESCRIPTION	CKT #	DESCRIPTION
—		50	
1		51	
2		52	
3		53	
4		54	
5		55	
6		56	
7		57	
8		58	
9		59	
10		60	
11		61	
12		62	
13		63	
14		64	
15		65	
16		66	
17		67	
18		68	
19		69	
20		70	
21		71	
22		72	
23		73	
24		74	
25		75	
26		76	
27		77	
28		78	
29		79	
30		80	
31		81	
32		82	
33		83	
34		84	
35		85	
36		86	
37		87	
38		88	
39		89	
40		90	
41		91	
42	FEED - SANDERS SWITCH	92	
43		93	
44		94	
45		95	
46		96	
47		97	
48		98	
49		99	

GRAY

TO SHEET 23...

CHK	DATE	CHANGE	REV	REFERENCE	DRAWN 300152	NAME CIRCUIT DIAGRAM, RE BUS BODY	
					RELEASE NO. 59856R	DATE 14DEC07	PART NO. AE08-56299 SHEET 022

Figure 22 Wire Reference of Gauge and Color and Circuit

1.23. WIRE REFERENCE OF GAUGE AND COLOR AND CIRCUIT, P. 23

INTERNATIONAL TRUCK AND ENGINE CORPORATION

THIS PRINT IS PROVIDED ON A RESTRICTED BASIS AND IS NOT TO BE USED IN ANY WAY DETRIMENTAL TO THE INTEREST OF INTERNATIONAL TRUCK AND ENGINE CORPORATION.

ELECTRICAL CIRCUIT DIAGRAM CHAPTER 1

WIRE REFERENCE OF GAUGE & COLOR AND CIRCUIT

FROM SHEET 22...

GRAY

16GA

CKT #	DESCRIPTION	CKT #	DESCRIPTION
—		50	
1		51	
2		52	
3		53	
4		54	
5		55	
6		56	
7		57	
8		58	
9		59	HEATED MIRRORS (UPPER)
10		60	HEATED MIRRORS (LOWER)
11		61	
12		62	
13		63	
14		64	
15		65	
16		66	
17		67	
18		68	
19		69	
20		70	
21		71	
22		72	
23		73	
24		74	
25		75	AIR HORN RELAY INTERFACE
26		76	
27		77	
28		78	
29		79	
30		80	
31		81	
32		82	
33		83	
34		84	
35		85	
36		86	
37		87	
38		88	
39		89	
40		90	
41	LEFT HAND SPEAKER (-)	91	
42	LEFT HAND SPEAKER(+) / FEED LEFT HAND SANDER	92	
43	FEED-RIGHT HAND SANDER	93	
44		94	
45		95	
46		96	
47		97	
48		98	
49		99	

GRAY

CHK	DATE	CHANGE	REV	REFERENCE	DRAWN	NAME
					300152	CIRCUIT DIAGRAM, RE BUS BODY
					RELEASE NO. 59856R	DATE 14DEC07 · PART NO. AE08-56299 · SHEET 023

Figure 23 Wire Reference of Gauge and Color and Circuit

1.24. WIRE REFERENCE OF GAUGE AND COLOR AND CIRCUIT, P. 24

INTERNATIONAL TRUCK AND ENGINE CORPORATION

THIS PRINT IS PROVIDED ON A RESTRICTED BASIS AND IS NOT TO BE USED IN ANY WAY DETRIMENTAL TO THE INTEREST OF INTERNATIONAL TRUCK AND ENGINE CORPORATION.

ELECTRICAL CIRCUIT DIAGRAM CHAPTER1

WIRE REFERENCE OF GAUGE & COLOR AND CIRCUIT

GREEN

12GA			
CKT #	DESCRIPTION	CKT #	DESCRIPTION
		50	
1		51	
2		52	
3		53	
4		54	
5		55	
6		56	
7		57	
8		58	
9		59	
10		60	
11	LEFT HAND WIPER (LOW)	61	
12	LEFT HAND WIPER (HI)	62	
13		63	
14		64	
15		65	
16		66	
17		67	
18	LEFT HAND DEFOG FAN (LOW)	68	
19		69	
20		70	
21		71	
22		72	
23		73	
24		74	
25		75	
26	LEFT HAND WIPER PARK	76	
27		77	
28		78	
29		79	
30		80	
31		81	
32		82	
33		83	
34		84	
35		85	
36		86	
37		87	
38		88	
39		89	
40		90	
41		91	
42		92	
43		93	
44		94	
45		95	
46		96	
47		97	
48		98	
49		99	

GREEN

TO SHEET 25...

CHK	DATE	CHANGE	REV	REFERENCE	DRAWN 300152	NAME CIRCUIT DIAGRAM, RE BUS BODY	
					RELEASE NO. 59856R	DATE 14DEC07	PART NO. AE08-56299 SHEET 024

Figure 24 Wire Reference of Gauge and Color and Circuit

1.25. WIRE REFERENCE OF GAUGE AND COLOR AND CIRCUIT, P. 25

INTERNATIONAL TRUCK AND ENGINE CORPORATION

THIS PRINT IS PROVIDED ON A RESTRICTED BASIS AND IS NOT TO BE USED IN ANY WAY DETRIMENTAL TO THE INTEREST OF INTERNATIONAL TRUCK AND ENGINE CORPORATION.

ELECTRICAL CIRCUIT DIAGRAM CHAPTER 1

WIRE REFERENCE OF GAUGE & COLOR AND CIRCUIT

FROM SHEET 24...

GREEN

16GA

CKT #	DESCRIPTION	CKT #	DESCRIPTION
—		50	
1		51	
2		52	
3		53	
4		54	
5		55	
6		56	
7		57	
8		58	
9		59	
10		60	
11		61	
12		62	
13		63	
14		64	
15		65	
16		66	LIFT LIGHT
17		67	RECIRCULATED CONTROL SIGNAL
18	LEFT DEFOG FAN (LOW)	68	
19		69	
20		70	
21		71	
22		72	
23		73	
24	RETARD HIGH / LOW	74	DOOR CONTROL SOLENOID VALVE
25		75	ALTERNATE ENTRANCE DOOR - INTERLOCK
26			DOOR MOTOR - INSIDE
27		76	
28		77	
29		78	
30		79	
31		80	
32		81	
33		82	
34		83	RIGHT DIRECTIONAL LIGHTS
35		84	
36		85	
37		86	
38		87	
39		88	
40		89	
41		90	
42		91	
43		92	
44		93	
45		94	
46		95	
47		96	
48		97	
49		98	
		99	

GREEN

CHK	DATE	CHANGE	REV	REFERENCE	DRAWN	NAME
					300152	CIRCUIT DIAGRAM, RE BUS BODY
					RELEASE NO. 59856R	DATE 14DEC07 · PART NO. AE08-56299 · SHEET 025

Figure 25 Wire Reference of Gauge and Color and Circuit

1.26. WIRE REFERENCE OF GAUGE AND COLOR AND CIRCUIT, P. 26

INTERNATIONAL TRUCK AND ENGINE CORPORATION

THIS PRINT IS PROVIDED ON A RESTRICTED BASIS AND IS NOT TO BE USED IN ANY WAY DETRIMENTAL TO THE INTEREST OF INTERNATIONAL TRUCK AND ENGINE CORPORATION.

ELECTRICAL CIRCUIT DIAGRAM CHAPTER 1

WIRE REFERENCE OF GAUGE & COLOR AND CIRCUIT

ORANGE

12GA			
CKT #	DESCRIPTION	CKT #	DESCRIPTION
—		50	
1		51	
2		52	
3		53	
4		54	
5		55	
6		56	
7		57	
8	LEFT REAR RED WARNING LIGHT	58	
9	RIGHT REAR RED WARNING LIGHT	59	
10		60	
11		61	
12		62	
13		63	
14		64	
15		65	
16		66	
17		67	
18		68	
19		69	
20		70	
21	LEFT DRIVER DEFOG BLOWER (LOW)	71	
22		72	
23		73	
24	LEFT REAR AMBER WARNING LIGHT	74	
25	RIGHT REAR AMBER WARNING LIGHT	75	
26		76	
27		77	
28		78	
29		79	
30		80	
31		81	
32		82	
33		83	
34		84	
35		85	
36		86	
37		87	
38		88	
39		89	
40		90	
41		91	
42		92	
43		93	
44		94	
45		95	
46		96	
47		97	
48		98	
49		99	

ORANGE

TO SHEET 27...

CHK	DATE	CHANGE	REV	REFERENCE	DRAWN 300152	NAME CIRCUIT DIAGRAM, RE BUS BODY	
					RELEASE NO. 59856R	DATE 14DEC07	PART NO. AE08-56299 SHEET 026

Figure 26 Wire Reference of Gauge and Color and Circuit

1.27. WIRE REFERENCE OF GAUGE AND COLOR AND CIRCUIT, P. 27

INTERNATIONAL TRUCK AND ENGINE CORPORATION

THIS PRINT IS PROVIDED ON A RESTRICTED BASIS AND IS NOT TO BE USED IN ANY WAY DETRIMENTAL TO THE INTEREST OF INTERNATIONAL TRUCK AND ENGINE CORPORATION.

ELECTRICAL CIRCUIT DIAGRAM CHAPTER 1

WIRE REFERENCE OF GAUGE & COLOR AND CIRCUIT

FROM SHEET 26...

ORANGE

16GA

CKT #	DESCRIPTION	CKT #	DESCRIPTION
—		50	
1		51	DOOR OPEN SWITCH ENTRANCE DOOR
2		52	
3		53	
4		54	
5		55	XSMN INTERLOCK
6		56	
7		57	
8	LEFT RED WARNING LIGHT	58	
9	RIGHT RED WARNING LIGHT	59	
10		60	
11		61	
12		62	AIR HORN RELAY TO AIR HORN SOLENOID
13		63	
14		64	
15		65	
16		66	
17		67	PUSH BUTTON SWITCH - AIR HORN
18		68	
19		69	
20		70	
21		71	
22		72	
23		73	
24	LEFT AMBER WARNING LIGHTS	74	
25	RIGHT AMBER WARNING LIGHTS	75	SPARE WIRE
26		76	
27		77	
28		78	
29		79	
30		80	
31		81	
32		82	
33		83	
34		84	
35		85	
36		86	
37		87	
38		88	
39		89	
40		90	
41		91	
42		92	
43		93	
44		94	
45		95	
46		96	
47		97	
48		98	
49		99	

ORANGE

CHK	DATE	CHANGE	REV	REFERENCE	DRAWN	NAME
					300152	CIRCUIT DIAGRAM, RE BUS BODY
					RELEASE NO. 59856R	DATE 14DEC07 · PART NO. AE08-56299 · SHEET 027

Figure 27 Wire Reference of Gauge and Color and Circuit

1.28. WIRE REFERENCE OF GAUGE AND COLOR AND CIRCUIT, P. 28

INTERNATIONAL TRUCK AND ENGINE CORPORATION

THIS PRINT IS PROVIDED ON A RESTRICTED BASIS AND IS NOT TO BE USED IN ANY WAY DETRIMENTAL TO THE INTEREST OF INTERNATIONAL TRUCK AND ENGINE CORPORATION.

ELECTRICAL CIRCUIT DIAGRAM CHAPTER 1

WIRE REFERENCE OF GAUGE & COLOR AND CIRCUIT

PINK

12GA

CKT #	DESCRIPTION	CKT #	DESCRIPTION
—		50	
1		51	
2		52	
3		53	
4		54	
5		55	
6		56	
7		57	
8	LEFT FRONT RED WARNING LIGHT	58	
9	RIGHT FRONT RED WARNING LIGHT	59	
10		60	
11		61	
12		62	
13		63	
14		64	
15		65	
16		66	
17		67	
18		68	
19		69	
20		70	
21		71	
22		72	
23		73	
24	LEFT FRONT AMBER WARNING LIGHT	74	
25	RIGHT FRONT AMBER WARNING LIGHT	75	
26		76	
27		77	
28		78	
29		79	
30		80	
31		81	
32		82	
33		83	
34		84	
35		85	
36		86	
37		87	
38		88	
39		89	
40		90	
41		91	
42		92	
43		93	
44		94	
45		95	
46		96	
47		97	
48		98	
49		99	

PINK

TO SHEET 29...

CHK	DATE	CHANGE	REV	REFERENCE	DRAWN 300152	NAME CIRCUIT DIAGRAM, RE BUS BODY	
					RELEASE NO. 59856R	DATE 14DEC07	PART NO. AE08-56299 SHEET 028

Figure 28 Wire Reference of Gauge and Color and Circuit

1.29. WIRE REFERENCE OF GAUGE AND COLOR AND CIRCUIT, P. 29

INTERNATIONAL TRUCK AND ENGINE CORPORATION

THIS PRINT IS PROVIDED ON A RESTRICTED BASIS AND IS NOT TO BE USED IN ANY WAY DETRIMENTAL TO THE INTEREST OF INTERNATIONAL TRUCK AND ENGINE CORPORATION.

ELECTRICAL CIRCUIT DIAGRAM CHAPTER 1

WIRE REFERENCE OF GAUGE & COLOR AND CIRCUIT

FROM SHEET 28... PINK

16GA

CKT #	DESCRIPTION	CKT #	DESCRIPTION
—		50	SPARE WIPER
1		51	
2		52	
3		53	
4		54	
5	EMERGENCY DOOR BUZZER	55	
6		56	
7		57	SIGNAL ROOF HATCHES
8		58	REAR WINDOW VANDAL LOCK
9		59	VANDAL LOCK SOLENOID AIR ENTRANCE DOOR
10		60	
11		61	
12		62	
13		63	CHIME (VIRGINIA OPTION)
14	KNOCK-OUT WINDOW	64	
15		65	
16		66	
17		67	
18		68	
19		69	
20		70	
21		71	
22		72	
23		73	
24		74	
25		75	SPECIAL BODY OPTION / CAMERA
26		76	BACK-UP LIGHTS
27		77	
28		78	
29		79	
30		80	
31		81	
32		82	
33		83	
34		84	
35		85	
36		86	
37		87	
38		88	
39		89	
40		90	
41	LEFT HAND SPEAKER (-)	91	
42		92	
43	LEFT HAND SPEAKER (+)	93	
44		94	
45		95	
46		96	
47		97	
48		98	
49		99	

PINK

CHK	DATE	CHANGE	REV	REFERENCE	DRAWN 300152	NAME CIRCUIT DIAGRAM, RE BUS BODY
					RELEASE NO. 59856R	DATE 14DEC07 PART NO. AE08-56299 SHEET 029

Figure 29 Wire Reference of Gauge and Color and Circuit

1.30. WIRE REFERENCE OF GAUGE AND COLOR AND CIRCUIT, P. 30

INTERNATIONAL TRUCK AND ENGINE CORPORATION

THIS PRINT IS PROVIDED ON A RESTRICTED BASIS AND IS NOT TO BE USED IN ANY WAY DETRIMENTAL TO THE INTEREST OF INTERNATIONAL TRUCK AND ENGINE CORPORATION.

ELECTRICAL CIRCUIT DIAGRAM CHAPTER 1

WIRE REFERENCE OF GAUGE & COLOR AND CIRCUIT

RED

12GA

CKT #	DESCRIPTION	CKT #	DESCRIPTION
—		50	
1		51	
2		52	
3		53	
4		54	
5		55	
6		56	
7		57	
8		58	
9		59	
10		60	
11		61	
12		62	
13		63	
14		64	
15		65	
16		66	
17		67	
18		68	+12V TO HEATER CONTROL-BLOWER SWITCH
19	LEFT HAND DEFOG FAN (HIGH)	69	
20		70	
21		71	
22	LEFT DRIVER DEFOG BLOWER (HIGH)	72	
23	LEFT MIDSHIP HEATER (HIGH)	73	
24		74	DIMMER SWITCH
25	RIGHT MIDSHIP HEATER (HIGH)	75	
26		76	
27		77	
28		78	
29		79	
30	MASTER FLASHER SWITCH	80	
31		81	
32		82	
33		83	FEED-REAR BRAKE LIGHTS
34	LEFT REAR HEATER (HIGH)	84	
35		85	
36		86	
37		87	
38	RIGHT REAR HEATER (HIGH)	88	
	FLASHER LIGHT START SWITCH - VIRGINIA	89	
39	FLASHER START SWITCH	90	
40		91	
41		92	
42		93	
43	DRIVER'S HEATER (HIGH)	94	
44		95	
45		96	
46		97	
47		98	
48		99	
49			

RED

TO SHEET 31...

CHK	DATE	CHANGE	REV	REFERENCE	DRAWN 300152	NAME CIRCUIT DIAGRAM, RE BUS BODY	
					RELEASE NO. 59856R	DATE 14DEC07	PART NO. AE08-56299 SHEET 030

Figure 30 Wire Reference of Gauge and Color and Circuit

1.31. WIRE REFERENCE OF GAUGE AND COLOR AND CIRCUIT, P. 31

INTERNATIONAL TRUCK AND ENGINE CORPORATION

THIS PRINT IS PROVIDED ON A RESTRICTED BASIS AND IS NOT TO BE USED IN ANY WAY DETRIMENTAL TO THE INTEREST OF INTERNATIONAL TRUCK AND ENGINE CORPORATION.

ELECTRICAL CIRCUIT DIAGRAM CHAPTER 1

WIRE REFERENCE OF GAUGE & COLOR AND CIRCUIT

RED

FROM SHEET 30...

16GA

CKT #	DESCRIPTION	CKT #	DESCRIPTION
—		50	
1	FEED - MASTER FLASHER PILOT	51	
2		52	
3		53	
4		54	OVERRIDE 'ON' (PILOT LIGHT)
5	ELE. DOOR MOTOR,AIR DOOR VANDAL LOCK	55	
6	ELE. DOOR MOTOR,AIR DOOR VANDAL LOCK	56	
7		57	
8		58	
9		59	
10		60	
11		61	
12		62	
13		63	WARNING LIGHTS (VIRGINIA)
14		64	CROSSING GATE ELECTRO MAGNET
15		65	
16		66	
17		67	
18		68	
19	LEFT DEFOG FAN (HIGH)	69	
20		70	
21		71	
22	FRONT POWER VENT (HIGH)	72	
23	REAR POWER VENT (HIGH)	73	
24	RETARD HIGH / LOW	74	
25	RETARD ON / OFF	75	CAMERA
26			GREEN FLASHER INDICATOR LIGHT
27		76	SIDE EMERGENCY DOOR SWITCH
28		77	
29		78	
30	WARNING LIGHTS (FLORIDA)	79	
31		80	
32	RIGHT DEFOG FAN (HIGH)	81	
33		82	
34		83	LEFT BRAKE AND STOP LIGHT
35		84	RIGHT BRAKE AND STOP LIGHT
36		85	
37		86	
38		87	
39	DEACTIVATION SWITCH	88	
40		89	
41		90	
42		91	
43		92	
44		93	
45		94	
46		95	
47		96	
48		97	
49		98	
		99	

RED

CHK	DATE	CHANGE	REV	REFERENCE	DRAWN 300152	NAME CIRCUIT DIAGRAM, RE BUS BODY
					RELEASE NO. 59856R	DATE 14DEC07 PART NO. AE08-56299 SHEET 031

Figure 31 Wire Reference of Gauge and Color and Circuit

1.32. WIRE REFERENCE OF GAUGE AND COLOR AND CIRCUIT, P. 32

INTERNATIONAL TRUCK AND ENGINE CORPORATION

THIS PRINT IS PROVIDED ON A RESTRICTED BASIS AND IS NOT TO BE USED IN ANY WAY DETRIMENTAL TO THE INTEREST OF INTERNATIONAL TRUCK AND ENGINE CORPORATION.

ELECTRICAL CIRCUIT DIAGRAM CHAPTER 1

WIRE REFERENCE OF GAUGE & COLOR AND CIRCUIT

VIOLET

12GA

CKT #	DESCRIPTION	CKT #	DESCRIPTION
—		50	
1		51	
2		52	
3		53	
4		54	
5		55	
6		56	
7		57	
8		58	
9		59	
10		60	
11		61	
12		62	
13		63	
14		64	
15		65	
16		66	
17		67	
18		68	
19		69	
20		70	
21		71	
22		72	
23		73	
24		74	
25		75	
26		76	
27	RIGHT WIPER (LOW)	77	
28	RIGHT WIPER (HI)	78	
29	RIGHT WIPER PARK	79	
30		80	
31		81	
32		82	
33		83	
34		84	
35		85	
36		86	
37		87	
38		88	
39		89	
40		90	
41		91	
42		92	
43		93	
44		94	
45		95	
46		96	
47		97	
48		98	
49		99	

VIOLET

TO SHEET 33...

CHK	DATE	CHANGE	REV	REFERENCE	DRAWN	NAME
					300152	CIRCUIT DIAGRAM, RE BUS BODY
					RELEASE NO. 59856R	DATE 14DEC07 · PART NO. AE08-56299 · SHEET 032

Figure 32 Wire Reference of Gauge and Color and Circuit

1.33. WIRE REFERENCE OF GAUGE AND COLOR AND CIRCUIT, P. 33

INTERNATIONAL TRUCK AND ENGINE CORPORATION

THIS PRINT IS PROVIDED ON A RESTRICTED BASIS AND IS NOT TO BE USED IN ANY WAY DETRIMENTAL TO THE INTEREST OF INTERNATIONAL TRUCK AND ENGINE CORPORATION.

ELECTRICAL CIRCUIT DIAGRAM CHAPTER 1

WIRE REFERENCE OF GAUGE & COLOR AND CIRCUIT

FROM SHEET 32... VIOLET

16GA

CKT #	DESCRIPTION	CKT #	DESCRIPTION
—		50	
1		51	
2		52	
3		53	
4		54	
5		55	LIFT SOLENOID
6		56	
7		57	
8		58	
9		59	
10		60	
11		61	
12		62	
13		63	
14		64	
15		65	
16		66	
17		67	
18		68	
19		69	
20	ENGINE COMPARTMENT LIGHTS	70	
21		71	
22		72	
23		73	
24		74	
25		75	TO BLU83 BACK-UP LIGHTS/HEADLIGHT SENSE
26		76	
27		77	
28		78	
29		79	
30	ENGINE SERVICE DOOR	80	
31	RIGHT DEFOG FAN (LOW)	81	
32		82	
33		83	
34		84	
35		85	
36		86	
37	FEED-SWITCH PANEL ILLUMINATION	87	
38		88	
39		89	
40		90	
41		91	
42		92	
43		93	
44		94	
45		95	
46		96	
47	WINDSHIELD WASHER BOTTLES(3 OR 8 QUART)	97	
48		98	
49		99	

VIOLET

CHK	DATE	CHANGE	REV	REFERENCE	DRAWN	NAME
					300152	CIRCUIT DIAGRAM, RE BUS BODY
					RELEASE NO. 59856R	DATE 14DEC07 · PART NO. AE08-56299 · SHEET 033

Figure 33 Wire Reference of Gauge and Color and Circuit

1.34. WIRE REFERENCE OF GAUGE AND COLOR AND CIRCUIT, P. 34

INTERNATIONAL TRUCK AND ENGINE CORPORATION

THIS PRINT IS PROVIDED ON A RESTRICTED BASIS AND IS NOT TO BE USED IN ANY WAY DETRIMENTAL TO THE INTEREST OF INTERNATIONAL TRUCK AND ENGINE CORPORATION.

ELECTRICAL CIRCUIT DIAGRAM CHAPTER 1

WIRE REFERENCE OF GAUGE & COLOR AND CIRCUIT

WHITE

12GA

CKT #	DESCRIPTION	CKT #	DESCRIPTION
—		50	
1		51	
2		52	
3		53	
4		54	
5		55	
6		56	
7		57	
8	GROUND-DRIVER'S HEATER	58	
9	GROUND-DEFROST HEATER	59	
10		60	GROUND
11		61	GROUND-RIGHT REAR HEATER
12		62	GROUND
13		63	GROUND
14		64	GROUND
15		65	GROUND
16		66	
17		67	
18		68	
19	GROUND-LEFT DEFOG FAN/BLOWER	69	
20		70	GROUND
21		71	
22		72	
23	GROUND-LEFT MIDSHIP HEATER	73	
24		74	
25	GROUND-RIGHT MIDSHIP HEATER	75	GROUND
26		76	
27		77	
28		78	
29		79	
30		80	
31		81	
32		82	
33		83	
34	GROUND-LEFT REAR HEATER	84	
35		85	
36		86	
37		87	
38		88	
39		89	
40		90	
41		91	
42		92	
43		93	
44		94	
45		95	
46		96	
47		97	
48		98	
49		99	

WHITE

TO SHEET 35...

CHK	DATE	CHANGE	REV	REFERENCE	DRAWN 300152	NAME CIRCUIT DIAGRAM, RE BUS BODY
					RELEASE NO. 59856R	DATE 14DEC07 PART NO. AE08-56299 SHEET 034

Figure 34 Wire Reference of Gauge and Color and Circuit

1.35. WIRE REFERENCE OF GAUGE AND COLOR AND CIRCUIT, P. 35

INTERNATIONAL TRUCK AND ENGINE CORPORATION

THIS PRINT IS PROVIDED ON A RESTRICTED BASIS AND IS NOT TO BE USED IN ANY WAY DETRIMENTAL TO THE INTEREST OF INTERNATIONAL TRUCK AND ENGINE CORPORATION.

ELECTRICAL CIRCUIT DIAGRAM CHAPTER 1

WIRE REFERENCE OF GAUGE & COLOR AND CIRCUIT

FROM SHEET 34...

WHITE

16GA

CKT #	DESCRIPTION	CKT #	DESCRIPTION
—		50	GROUND-SANDER LEVEL SWITCH
1	GROUND-FRONT CLUSTER LIGHTS	51	GROUND-RIGHT LEVEL BAR HARNESS
2	GROUND CLEARANCE LIGHTS RELAY	52	
3	GROUND-REAR DIRECTIONAL	53	GROUND-DOOR OPEN LF ENGINE COMP LIGHTS
4	RELAY "D"- 3 POS TOGGLE SWITCH FOR ELECTRIC DOOR (FAIR FAX COUNTY)	54	GROUND-STOP ARM RELAY
		55	GROUND-LEFT DOOR SWITCH
5	GROUND-AIR OR ELECTRIC DOOR CONTROL	56	GROUND
6		57	GROUND
7		58	GROUND
8	GROUND-RIGHT HAND SWITCH PANEL	59	GROUND-HEATED MIRRORS (CROSSVIEW)
9		60	GROUND
10		61	GROUND
11		62	GROUND
12		63	GROUND-STOP ARM/AIR VALVE
13		64	GROUND-STROBE LIGHT
14		65	GROUND
15	NO CHILD LF BEHIND-WITH DEACTIVATION SW	66	GROUND-CHIME
16		67	GROUND-CAMERA
17		68	GROUND-RECIRCULATE MOTOR
18		69	GROUND-NOISE KILL SOLENOID
19	GROUND-FAR RIGHT DEFOG FAN	70	GROUND
20		71	
21		72	
22	GROUND-MARKER /CLUSTER LIGHTS	73	
23	GROUND	74	
24		75	GROUND
25		76	GROUND-RH DIRECTIONAL TO FLASHER PLATE
26		77	
27		78	
28		79	
29		80	
30	GROUND-ACTIVITY LIGHT	81	
31	GROUND-HEATED WIPER BLADES	82	
32	SIGNAL VANDAL LOCK SW TO DOOR OPEN RELAY	83	LH REAR END LIGHT
		84	RH REAR END LIGHT
33	SIGNAL VANDAL LOCK SW TO DOOR CLOSED RELAY	85	
		86	
34	GROUND-INTERIOR LIFT LIGHT	87	
35		88	
36	GROUND-DRIVER'S DOME LIGHT	89	
37	GROUND-SWITCH PANEL ILLUMINATION	90	
38		91	
39		92	
40	GROUND-IGNITION/ACCESSORY GROUND-MASTER DISCONNECT SOLENOID	93	
		94	
41		95	
42	GROUND-RADIO	96	
43		97	
44		98	
45		99	
46			
47			
48			
49			

WHITE

CHK	DATE	CHANGE	REV	REFERENCE	DRAWN	NAME
					300152	CIRCUIT DIAGRAM, RE BUS BODY
					RELEASE NO. 59856R	DATE 14DEC07 · PART NO. AE08-56299 · SHEET 035

Figure 35 Wire Reference of Gauge and Color and Circuit

1.36. WIRE REFERENCE OF GAUGE AND COLOR AND CIRCUIT, P. 36

INTERNATIONAL TRUCK AND ENGINE CORPORATION

THIS PRINT IS PROVIDED ON A RESTRICTED BASIS AND IS NOT TO BE USED IN ANY WAY DETRIMENTAL TO THE INTEREST OF INTERNATIONAL TRUCK AND ENGINE CORPORATION.

ELECTRICAL CIRCUIT DIAGRAM CHAPTER 1

WIRE REFERENCE OF GAUGE & COLOR AND CIRCUIT

YELLOW

12GA			
CKT #	DESCRIPTION	CKT #	DESCRIPTION
		50	
1		51	
2		52	
3		53	
4		54	
5		55	
6		56	
7		57	
8		58	
9		59	
10		60	
11		61	
12		62	
13		63	
14		64	
15		65	
16		66	
17		67	
18		68	
19		69	
20		70	
21		71	
22		72	
23		73	
24		74	
25		75	
26		76	
27		77	
28		78	
29		79	
30		80	
31		81	
32		82	
33		83	
34		84	
35		85	
36		86	
37		87	
38		88	
39		89	
40		90	
41		91	
42		92	
43		93	
44		94	
45		95	
46		96	
47		97	
48		98	
49		99	

TO SHEET 37...

YELLOW

CHK	DATE	CHANGE	REV	REFERENCE	DRAWN 300152	NAME CIRCUIT DIAGRAM, RE BUS BODY	
					RELEASE NO. 59856R	DATE 14DEC07	PART NO. AE08-56299 SHEET 036

Figure 36 Wire Reference of Gauge and Color and Circuit

1.37. WIRE REFERENCE OF GAUGE AND COLOR AND CIRCUIT, P. 37

INTERNATIONAL TRUCK AND ENGINE CORPORATION

THIS PRINT IS PROVIDED ON A RESTRICTED BASIS AND IS NOT TO BE USED IN ANY WAY DETRIMENTAL TO THE INTEREST OF INTERNATIONAL TRUCK AND ENGINE CORPORATION.

ELECTRICAL CIRCUIT DIAGRAM CHAPTER 1

WIRE REFERENCE OF GAUGE & COLOR AND CIRCUIT

FROM SHEET 36...

YELLOW

16GA

CKT #	DESCRIPTION	CKT #	DESCRIPTION
—		50	SPARE WIRE
1		51	CLUSTER LIGHTS
2	SIDE & CORNER MARKERS/CLEARANCE/ CLUSTER LIGHTS	52	WARNING LIGHTS
		53	
3		54	
4		55	
5		56	
6		57	
7		58	
8		59	
9		60	
10		61	
11		62	
12		63	ELECTRIC CROSSING GATE
13		64	
14		65	
15		66	
16		67	
17		68	
18		69	
19		70	
20		71	
21		72	
22		73	
23		74	
24		75	STOP ARM HEATER
25			DOOR MOTOR - OUTSIDE
26		76	
27		77	
28		78	
29		79	
30	PA SPEAKER / HORN	80	
31	PA SPEAKER / HORN	81	
32		82	
33		83	LEFT DIRECTION LIGHTS
34	LIFT DOOR SWITCH	84	
35		85	
36		86	
37		87	
38	FEED-STEP LIGHT RELAY	88	
39		89	
40		90	
41		91	
42		92	
43		93	
44		94	
45		95	
46		96	
47		97	
48		98	
49		99	

YELLOW

CHK	DATE	CHANGE	REV	REFERENCE	DRAWN	NAME
					300152	CIRCUIT DIAGRAM, RE BUS BODY
					RELEASE NO. 59856R	DATE 14DEC07 · PART NO. AE08-56299 · SHEET 037

Figure 37 Wire Reference of Gauge and Color and Circuit

1.38. RE BUS WIRING LAYOUT, P. 38

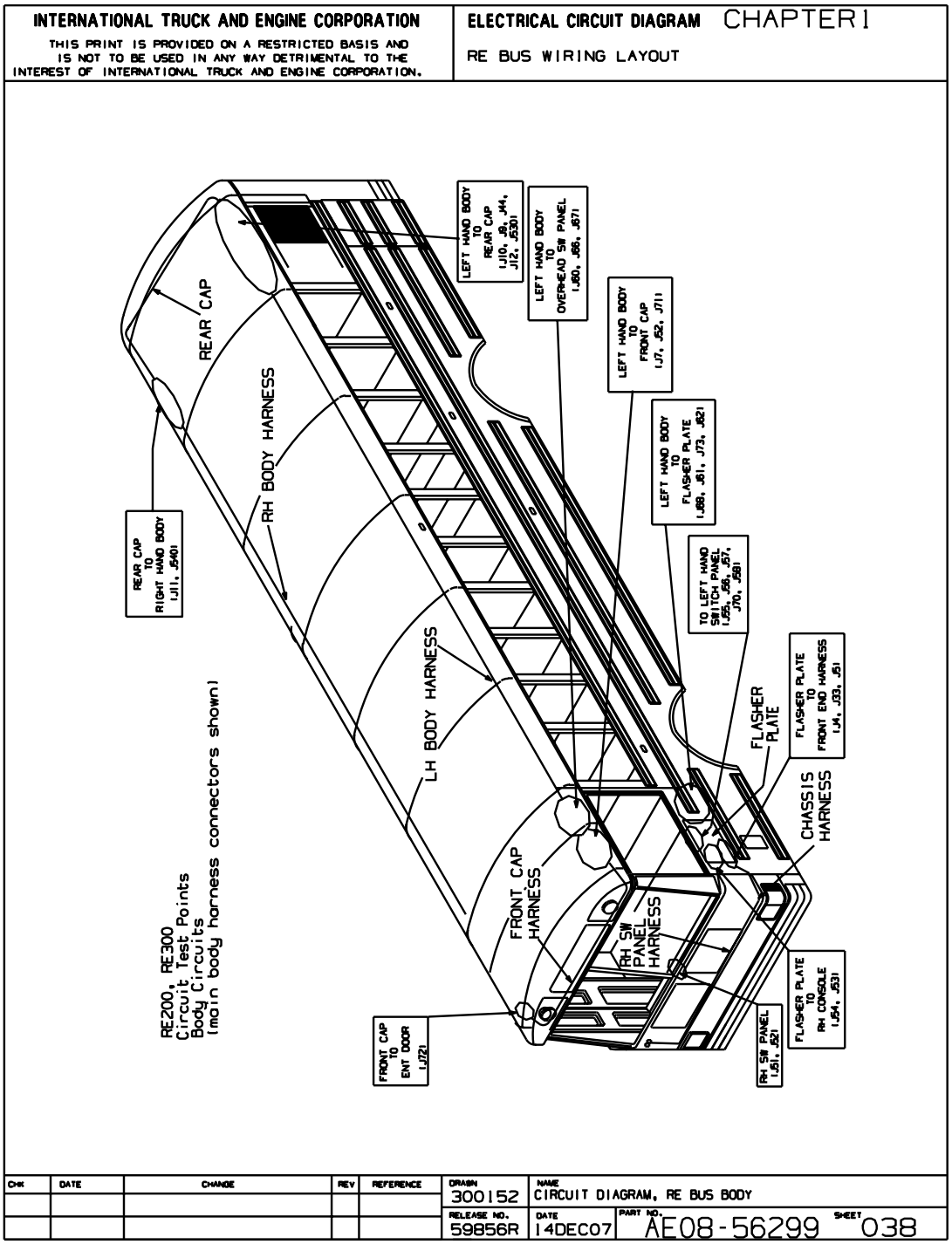

Figure 38 RE Bus Wiring Layout

2. POWER DISTRIBUTION (CHAPTER 2)

2.1. 18CKT POWER DISTRIBUTION IGNITION OPERATED MASTER DISCONNECT, P. 1

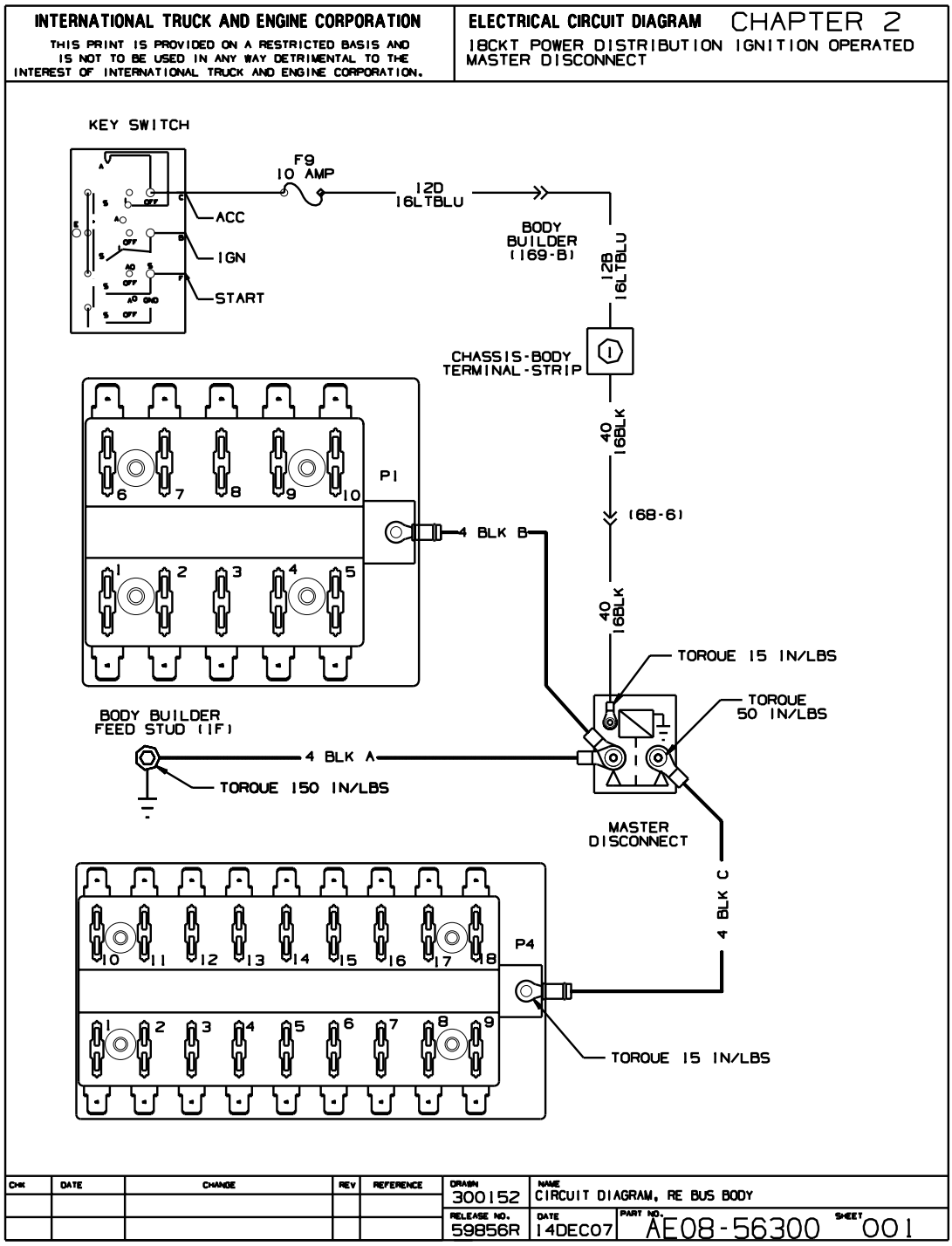

Figure 39 18ckt Power Distribution Ignition Operated Master Disconnect

2.2. ALL CIRCUITS HOT ALL THE TIME, P. 2

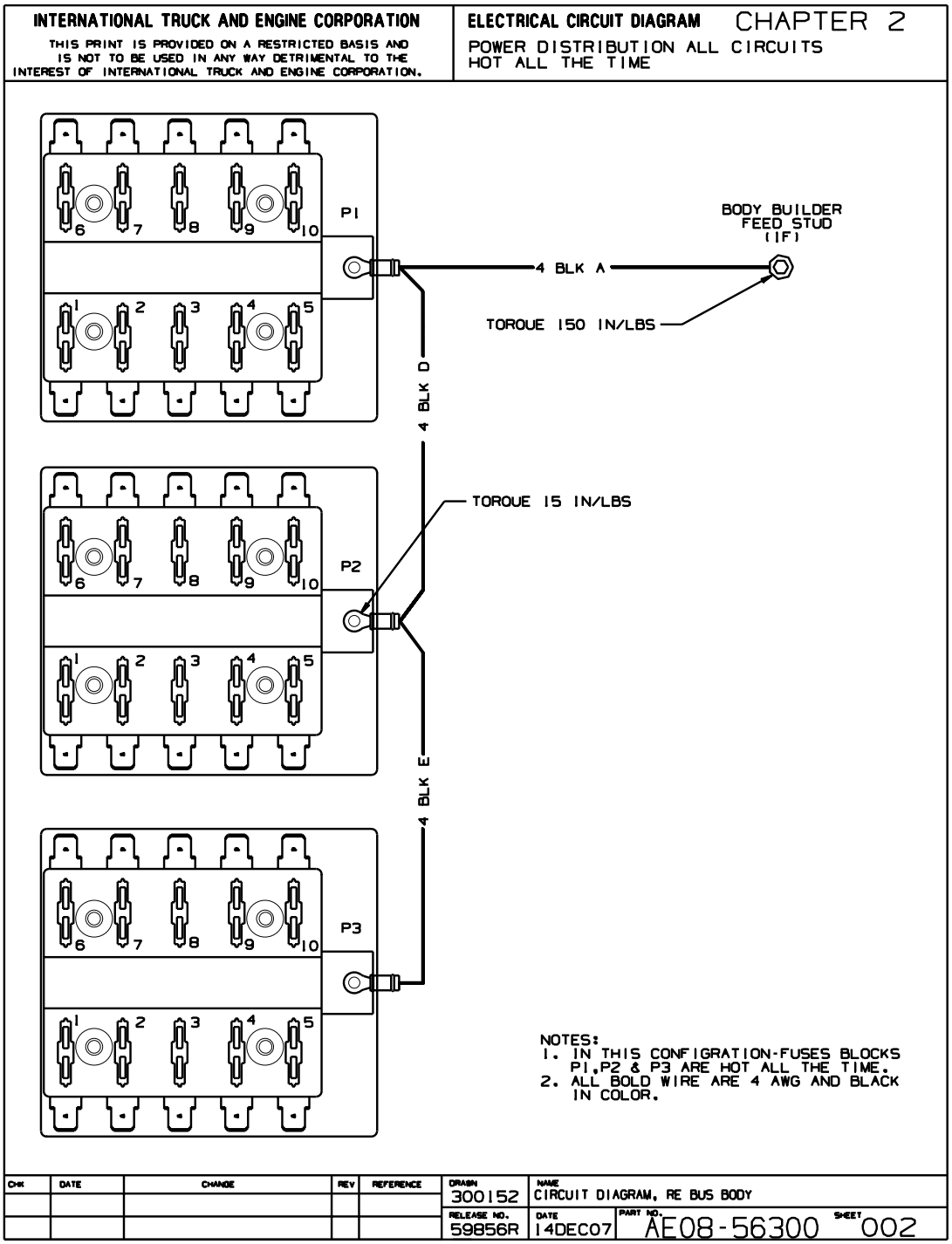

Figure 40 All Circuits Hot All the Time

2.3. FUSE BLOCK P1, P. 3

INTERNATIONAL TRUCK AND ENGINE CORPORATION

THIS PRINT IS PROVIDED ON A RESTRICTED BASIS AND IS NOT TO BE USED IN ANY WAY DETRIMENTAL TO THE INTEREST OF INTERNATIONAL TRUCK AND ENGINE CORPORATION.

ELECTRICAL CIRCUIT DIAGRAM CHAPTER 2

POWER DISTRIBUTION FUSE BLOCK P1

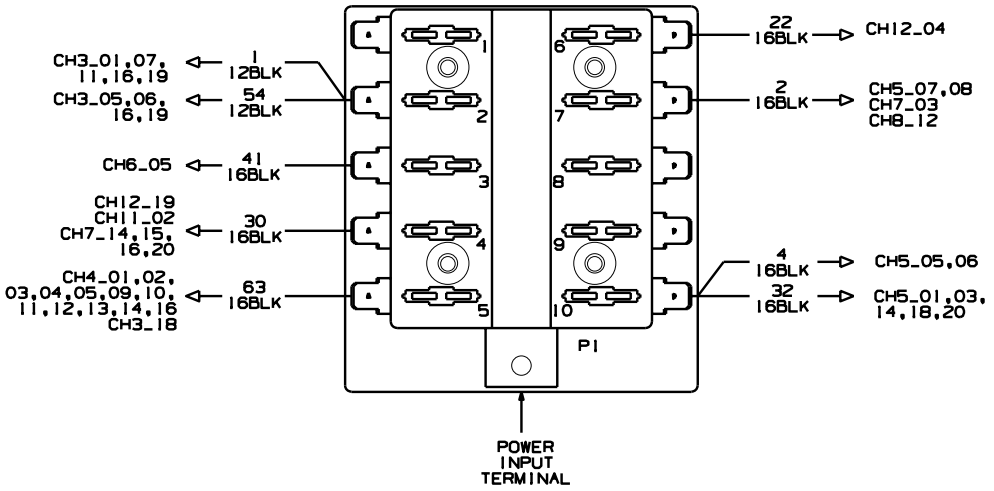

FUSE BLOCK DESIGNATION	FUSE VALUE (AMPERAGE)	CIRCUIT DESIGNATION	FUNCTION
1	SPARE		
2	25	12 BLK 1	WARNING LIGHT
	25	12 BLK 54	OVERRIDE SWITCH
3	7.5	16 BLK 41	RADIO MEMORY
4	7.5	16 BLK 30	ENGINE COMPARTMENT LIGHT
5	7.5	16 BLK 63	STOP ARM
6	7.5	16 BLK 22	DC OUTLET
7	7.5	16 BLK 2	CLEARANCE LIGHT
8	15	16 BLK 3	LEFT SIDE DOME LIGHT
9	15	16 BLK 15	RIGHT SIDE DOME LIGHT
10	7.5	16 BLK 4	VANDAL LOCK
	15	16 BLK 32	ELECTRIC DOOR

INPUT POWER TO FUSE BLOCK POWER INPUT TERMINAL IS WIRED "HOT ALL THE TIME".

NOTES:
1. BOLD TEXT REPRESENTS STANDARD BUS FEATURE.
2. DUE TO THE MANY VARIATIONS IN CUSTOMER OPTIONS. THIS FUSE CHART SHOULD BE USED FOR REFERENCE ONLY. FUSE LOCATIONS MAY CHANGE DUE TO MANY POSSIBLE OPTION COMBINATIONS.

CHK	DATE	CHANGE	REV	REFERENCE	DRAWN	NAME	
					300152	CIRCUIT DIAGRAM, RE BUS BODY	
					RELEASE NO. 59856R	DATE 14DEC07	PART NO. AE08-56300 SHEET 003

Figure 41 Fuse Block P1

2.4. FUSE BLOCK P2, P. 4

INTERNATIONAL TRUCK AND ENGINE CORPORATION

THIS PRINT IS PROVIDED ON A RESTRICTED BASIS AND IS NOT TO BE USED IN ANY WAY DETRIMENTAL TO THE INTEREST OF INTERNATIONAL TRUCK AND ENGINE CORPORATION.

ELECTRICAL CIRCUIT DIAGRAM CHAPTER 2

POWER DISTRIBUTION FUSE BLOCK P2

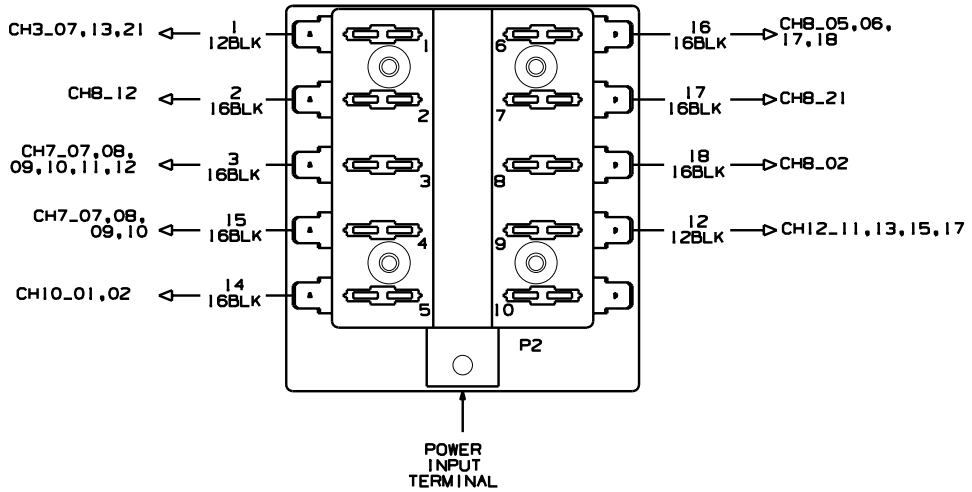

FUSE BLOCK DESIGNATION	FUSE VALUE (AMPERAGE)	CIRCUIT DESIGNATION	FUNCTION
1	25	12 BLK 1	WARNING LIGHTS
2	7.5	16 BLK 2	CLEARANCE LIGHTS
3	15	16 BLK 3	LEFT DOME LIGHTS
4	15	16 BLK 15	RIGHT DOME LIGHTS
5	15	16 BLK 14	HEATED MIRROR
		16 BLK 36	MOTORIZED MIRROR
6	10	16 BLK 16	STROBE LIGHT
7	10	16 BLK 17	LIGHT MONITOR
8	7.5	16 BLK 18	DESTINATION SIGN
9	25 AUTO RESET	12 BLK 12	WINDSHIELD WIPERS
10	SPARE		

INPUT POWER TO FUSE BLOCK POWER INPUT TERMINAL P2 CAN BE WIRED IN TWO WAYS.

1. HOT ALL THE TIME

OR

2. THRU MASTER DISCONNECT SOLENOID.

NOTES:
1. BOLD TEXT REPRESENTS STANDARD BUS FEATURES.
2. DUE TO THE MANY VARIATIONS IN CUSTOMER OPTIONS. THIS FUSE CHART SHOULD BE USED FOR REFERENCE ONLY. FUSE LOCATIONS MAY CHANGE DUE TO MANY POSSIBLE OPTION COMBINATIONS.

CHK	DATE	CHANGE	REV	REFERENCE	DRAWN	NAME
					300152	CIRCUIT DIAGRAM, RE BUS BODY
					RELEASE NO. 59856R	DATE 14DEC07 · PART NO. AE08-56300 · SHEET 004

Figure 42 Fuse Block P2

2.5. FUSE BLOCK P3, P. 5

INTERNATIONAL TRUCK AND ENGINE CORPORATION

THIS PRINT IS PROVIDED ON A RESTRICTED BASIS AND IS NOT TO BE USED IN ANY WAY DETRIMENTAL TO THE INTEREST OF INTERNATIONAL TRUCK AND ENGINE CORPORATION.

ELECTRICAL CIRCUIT DIAGRAM CHAPTER 2

POWER DISTRIBUTION FUSE BLOCK P3

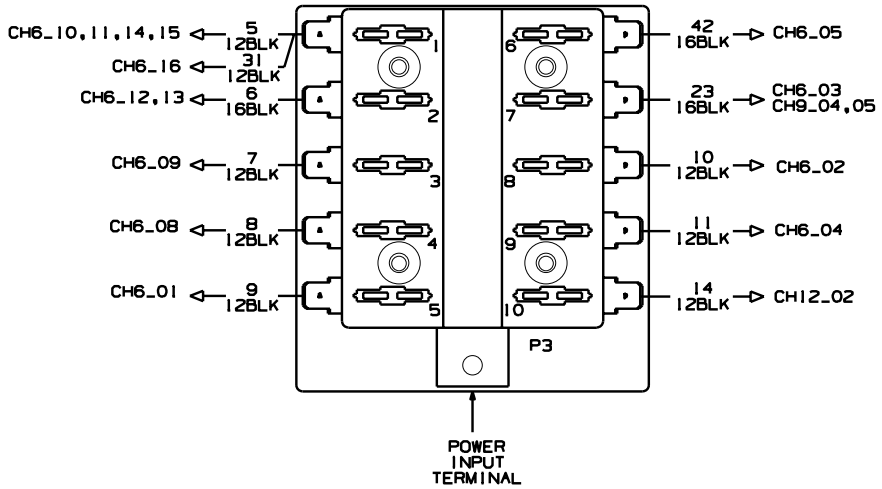

FUSE BLOCK DESIGNATION	FUSE VALUE (AMPERAGE)	CIRCUIT DESIGNATION	FUNCTION
1	7.5	12 BLK 5	SINGLE LEFT DEFOG FAN
	20	12 BLK 31	DRIVER LEFT DEFOG BLOWER
2	7.5	16 BLK 6	RIGHT DEFOG FAN
3	20	12 BLK 7	DEFROST FAN
4	20	12 BLK 8	STEP HEATER
5	20	12 BLK 9	DRIVERS HEATER
6	7.5	16 BLK 42	RADIO
7	15	16 BLK 23	POWER VENT
8	20	12 BLK 10	MIDSHIP HEATER
9	20	12 BLK 11	REAR HEATER
10	20	12 BLK 14	BOOSTER PUMP

INPUT POWER TO FUSE BLOCK POWER INPUT TERMINAL P3 CAN BE WIRED IN THREE WAYS.

1. HOT ALL THE TIME
   OR
2. THRU MASTER DISCONNECT SOLENOID.
   OR
3. NOISE KILL DISCONNECT SOLENOID

NOTES:
1. BOLD TEXT REPRESENTS STANDARD BUS FEATURES.
2. DUE TO THE MANY VARIATIONS IN CUSTOMER OPTIONS. THIS FUSE CHART SHOULD BE USED FOR REFERENCE ONLY. FUSE LOCATIONS MAY CHANGE DUE TO MANY POSSIBLE OPTION COMBINATIONS.

CHK	DATE	CHANGE	REV	REFERENCE	DRAWN 300152	NAME CIRCUIT DIAGRAM, RE BUS BODY	
					RELEASE NO. 59856R	DATE 14DEC07	PART NO. AE08-56300 SHEET 005

Figure 43 Fuse Block P3

2.6. FUSE BLOCK P4, P. 6

INTERNATIONAL TRUCK AND ENGINE CORPORATION

THIS PRINT IS PROVIDED ON A RESTRICTED BASIS AND IS NOT TO BE USED IN ANY WAY DETRIMENTAL TO THE INTEREST OF INTERNATIONAL TRUCK AND ENGINE CORPORATION.

ELECTRICAL CIRCUIT DIAGRAM CHAPTER 2

POWER DISTRIBUTION FUSE BLOCK P4

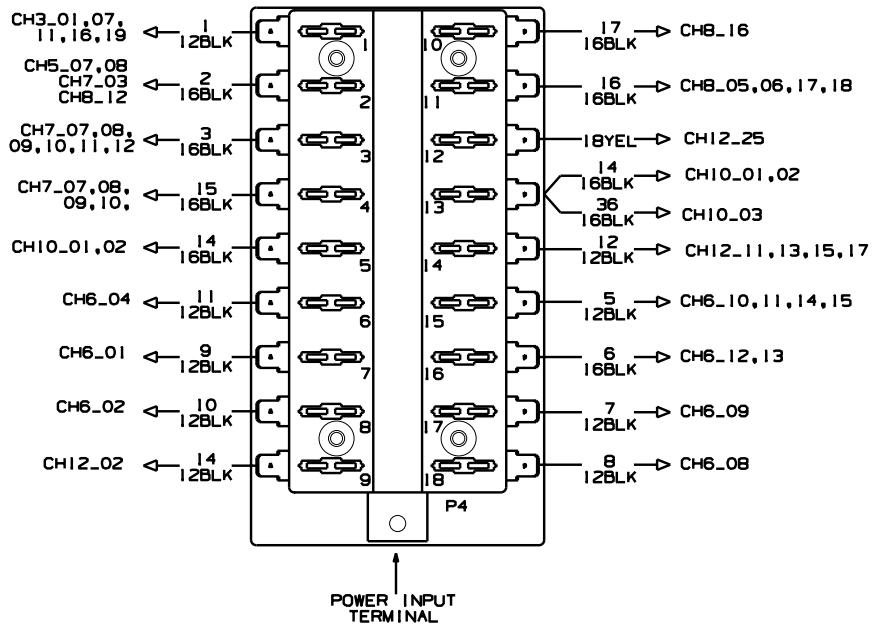

FUSE BLOCK DESIGNATION	FUSE VALUE (AMPERAGE)	CIRCUIT DESIGNATION	FUNCTION
1	25	12 BLK 1	WARNING LIGHTS
2	15	16 BLK 2	CLEARANCE LIGHTS
3	15	16 BLK 3	LEFT DOME LIGHTS
4	15	16 BLK 15	RIGHT DOME LIGHTS
5	15	16 BLK 14	MOTORIZED MIRRORS
		16 BLK 36	
6	20	12 BLK 11	REAR HEATER
7	20	12 BLK 9	DRIVER'S HEATER
8	20	12 BLK 10	MIDSHIP HEATER
9	20	12 BLK 14	BOOSTER PUMP
10	10	16 BLK 17	LIGHT MONITOR
11	10	16 BLK 16	STROBE LIGHT
12	3	16 YEL	CHILD CHECK MATE
13	7.5	16 BLK 14	HEATED MIRROR
		16 BLK 36	MOTORIZED MIRROR
14	25 AUTO RESET	12 BLK 12	WINDSHIELD WIPERS
		16 BLK 12	
15	20	12 BLK 5	SINGLE LEFT DEFOG FAN
	7.5	16 BLK 30	SINGLE CENTER BLOWER FAN
16	7.5	16 BLK 6	RIGHT DEFOG FAN
17	20	12 BLK 7	DEFROST FAN
18	20	12 BLK 8	STEP HEATER

INPUT POWER TO FUSE BLOCK POWER INPUT TERMINAL P4 CAN BE WIRED IN TWO WAYS.

NOTES:
1. BOLD TEXT REPRESENTS STANDARD BUS FEATURES.
2. DUE TO THE MANY VARIATIONS IN CUSTOMER OPTIONS. THIS FUSE CHART SHOULD BE USED FOR REFERENCE ONLY. FUSE LOCATIONS MAY CHANGE DUE TO MANY POSSIBLE OPTION COMBINATIONS.

CHK	DATE	CHANGE	REV	REFERENCE	DRAWN 300152	NAME CIRCUIT DIAGRAM, RE BUS BODY	
					RELEASE NO. 59856R	DATE 14DEC07	PART NO. AE08-56300 SHEET 006

Figure 44 Fuse Block P4

2.7. FUSE BLOCK FLORIDA, P. 7

INTERNATIONAL TRUCK AND ENGINE CORPORATION

THIS PRINT IS PROVIDED ON A RESTRICTED BASIS AND IS NOT TO BE USED IN ANY WAY DETRIMENTAL TO THE INTEREST OF INTERNATIONAL TRUCK AND ENGINE CORPORATION.

ELECTRICAL CIRCUIT DIAGRAM CHAPTER 2

FUSE BLOCK FLORIDA

FUSE LOCATIONS FOR STATE OF FLORIDA

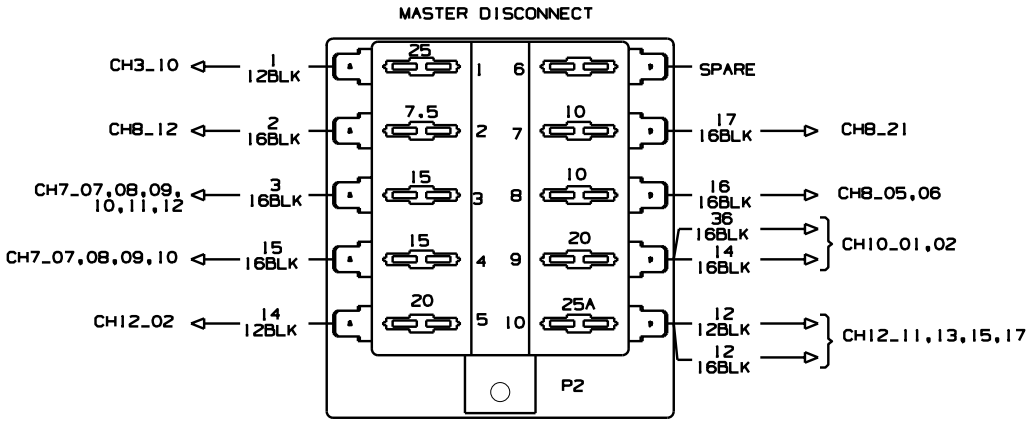

FUSE BLOCK DESIGNATION	FUSE VALUE (AMPERAGE)	CIRCUIT DESIGNATION	FUNCTION
1	25	12 BLK 1	WARN LIGHTS
2	7.5	16 BLK 2	CLEARANCE LIGHT
3	15	16 BLK 3	DOME LIGHTS
4	15	16 BLK 15	DOME LIGHTS
5	20	12 BLK 14	BOOSTER PUMP
6	SPARE		
7	10	16 BLK 17	LIGHT MONITOR
8	10	16 BLK 16	STROBE LIGHT
9	20	16 BLK 36	MOTORIZED MIRROR
		16 BLK 14	HEATED MIRROR
10	25	12 BLK 12	WIPERS
		16 BLK 12	WIPERS

CHK	DATE	CHANGE	REV	REFERENCE	DRAWN	NAME
					300152	CIRCUIT DIAGRAM, RE BUS BODY
					RELEASE NO. 59856R	DATE 14DEC07 · PART NO. AE08-56300 · SHEET 007

Figure 45 Fuse Block Florida

2.8. FUSE BLOCK FLORIDA, P. 8

INTERNATIONAL TRUCK AND ENGINE CORPORATION

THIS PRINT IS PROVIDED ON A RESTRICTED BASIS AND IS NOT TO BE USED IN ANY WAY DETRIMENTAL TO THE INTEREST OF INTERNATIONAL TRUCK AND ENGINE CORPORATION.

ELECTRICAL CIRCUIT DIAGRAM CHAPTER 2

FUSE BLOCK FLORIDA

FUSE LOCATIONS FOR STATE OF FLORIDA

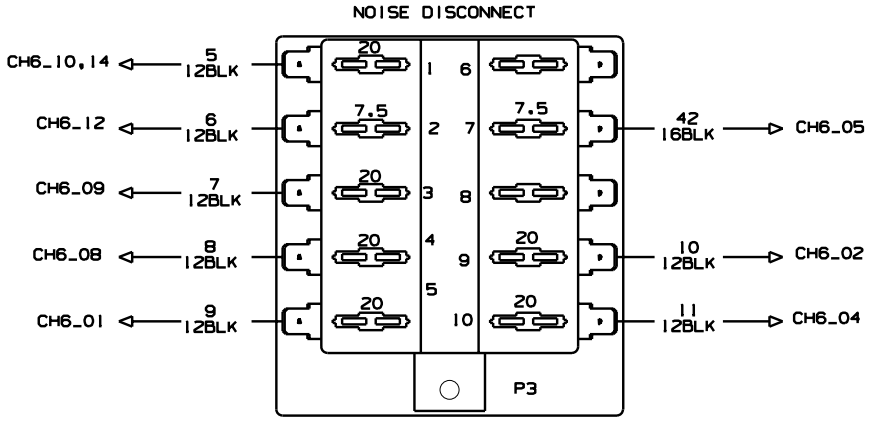

FUSE BLOCK DESIGNATION	FUSE VALUE (AMPERAGE)	CIRUIT DESIGNATION	FUNCTION
1	20	12 BLK 5	DEFOG FAN
2	7.5	12 BLK 6	DEFOG FAN
3	20	12 BLK 7	DRIVERS DEFROST
4	20	12 BLK 8	STEP HEATER
5	20	12 BLK 9	DRIVER HEATER
6	SPARE		
7	7.5	16 BLK 42	RADIO
8	SPARE		
9	20	12 BLK 10	MIDSHIP HEATER
10	20	12 BLK 11	REAR HEATER

CHK	DATE	CHANGE	REV	REFERENCE	DRAWN 300152	NAME CIRCUIT DIAGRAM, RE BUS BODY	
					RELEASE NO. 59856R	DATE 15DEC07	PART NO. AE08-56300 SHEET 008

Figure 46 Fuse Block Florida

2.9. FUSE BLOCK FLORIDA, P. 9

INTERNATIONAL TRUCK AND ENGINE CORPORATION

THIS PRINT IS PROVIDED ON A RESTRICTED BASIS AND IS NOT TO BE USED IN ANY WAY DETRIMENTAL TO THE INTEREST OF INTERNATIONAL TRUCK AND ENGINE CORPORATION.

ELECTRICAL CIRCUIT DIAGRAM CHAPTER 2

FUSE BLOCK FLORIDA

FUSE LOCATIONS FOR STATE OF FLORIDA

HOT ALL TIME

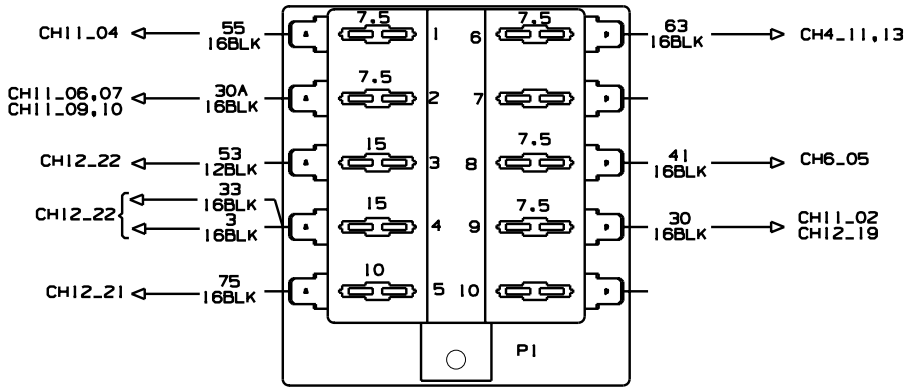

FUSE BLOCK DESIGNATION	FUSE VALUE (AMPERAGE)	CIRCUIT DESIGNATION	FUNCTION
1	7.5	16 BLK 55	LIFT LIGHT
2	7.5	16 BLK 30A	LIFT INTERLOCK
3	15	12 BLK 53	CRS RELAY
4	15	16 BLK 3	CRS DOME LIGHTS
		16 BLK 33	CRS DOME LIGHTS
5	10	16 BLK 75	CRS MODULE
6	7.5	16 BLK 63	STOP ARM
7	SPARE		
8	7.5	16 BLK 41	RADIO MEMORY
9	7.5	16 BLK 30	ENGINE COMP. LIGHT
10	SPARE		

CHK	DATE	CHANGE	REV	REFERENCE	DRAWN 300152	NAME CIRCUIT DIAGRAM, RE BUS BODY	
					RELEASE NO. 59856R	DATE 14DEC07	PART NO. AE08-56300 SHEET 009

Figure 47 Fuse Block Florida

2.10. 18CKT POWER DISTRIBUTION ROCKER SWITCH OPERATED MASTER DISCONNECT, P. 10

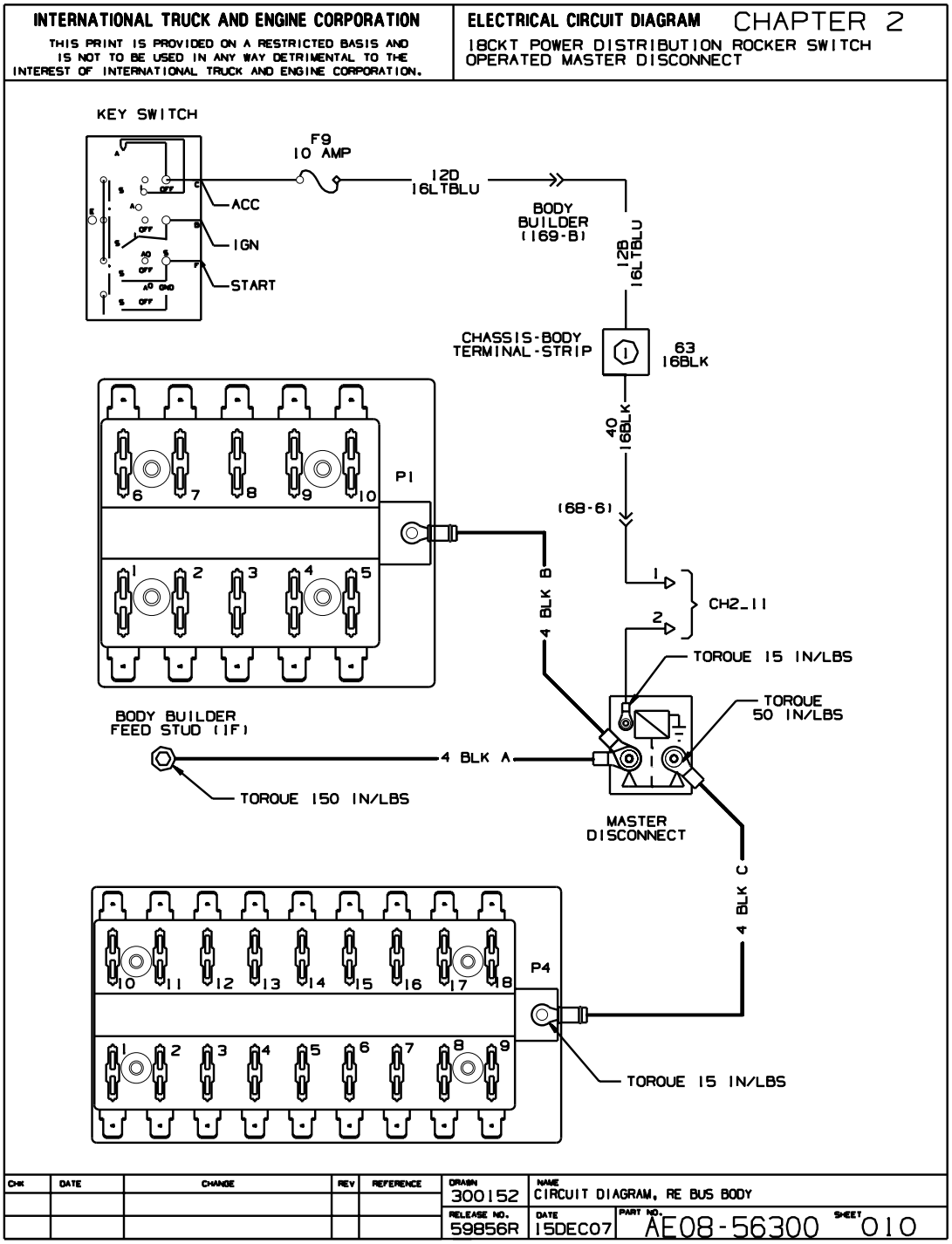

Figure 48 18ckt Power Distribution Rocker Switch Operated Master Disconnect

2.11. 18CKT POWER DISTRIBUTION ROCKER SWITCH OPERATED MASTER DISCONNECT, P. 11

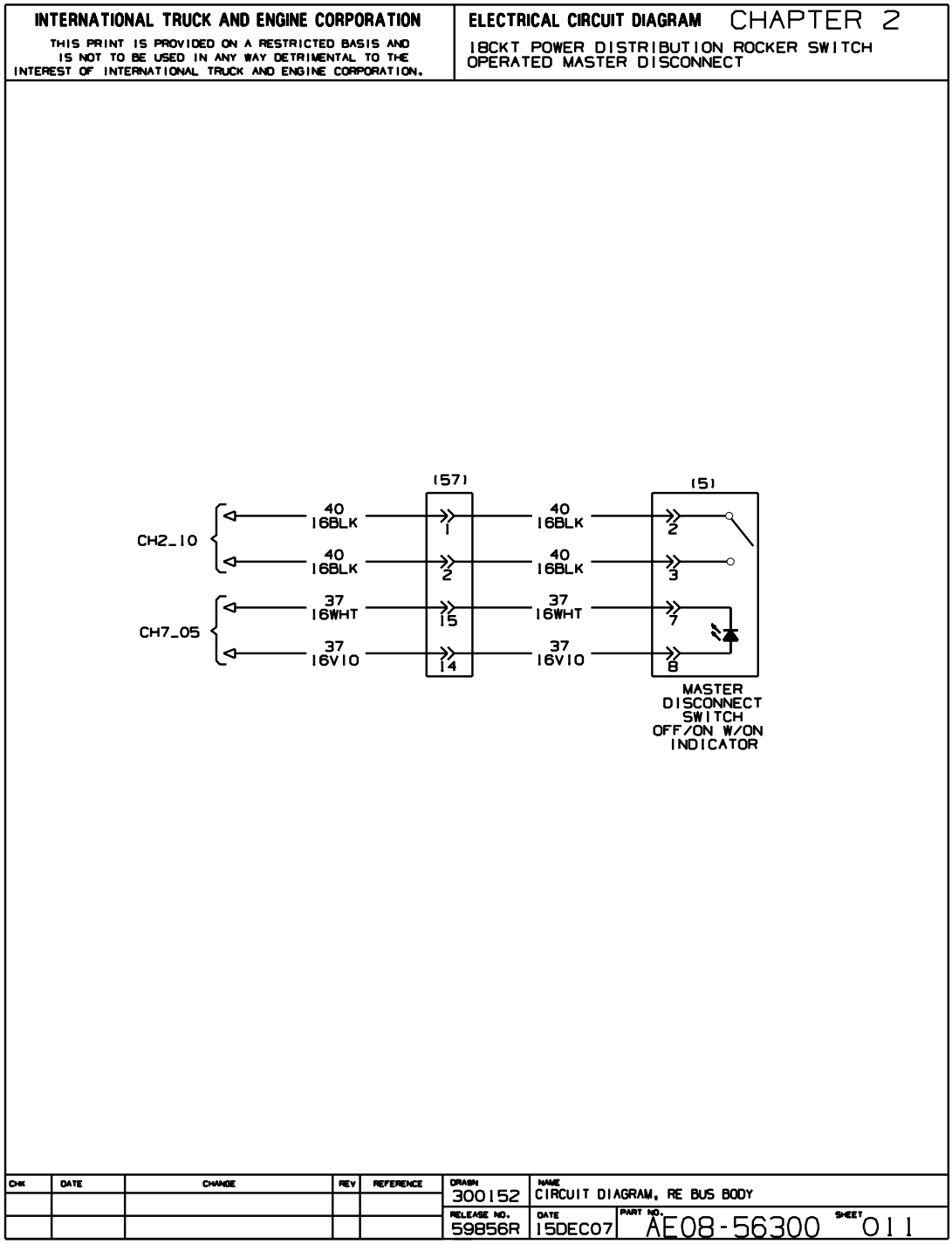

Figure 49 18ckt Power Distribution Rocker Switch Operated Master Disconnect

2.12. POWER DISTRIBUTED ROCKER SWITCH OPERATED MASTER DISCONNECT, P. 12

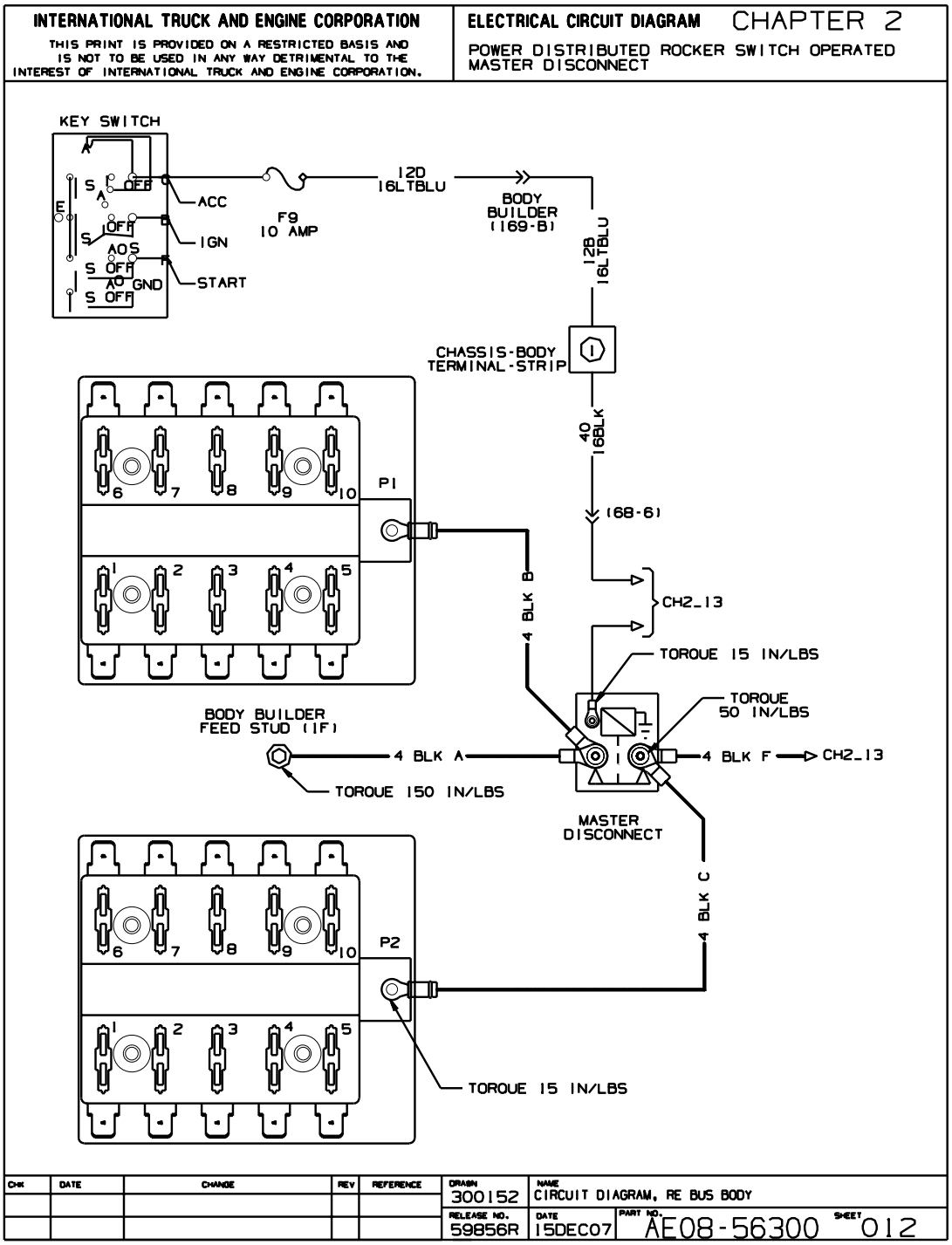

Figure 50 Power Distributed Rocker Switch Operated Master Disconnect

2.13. POWER DISTRIBUTED ROCKER SWITCH OPERATED MASTER DISCONNECT, P. 13

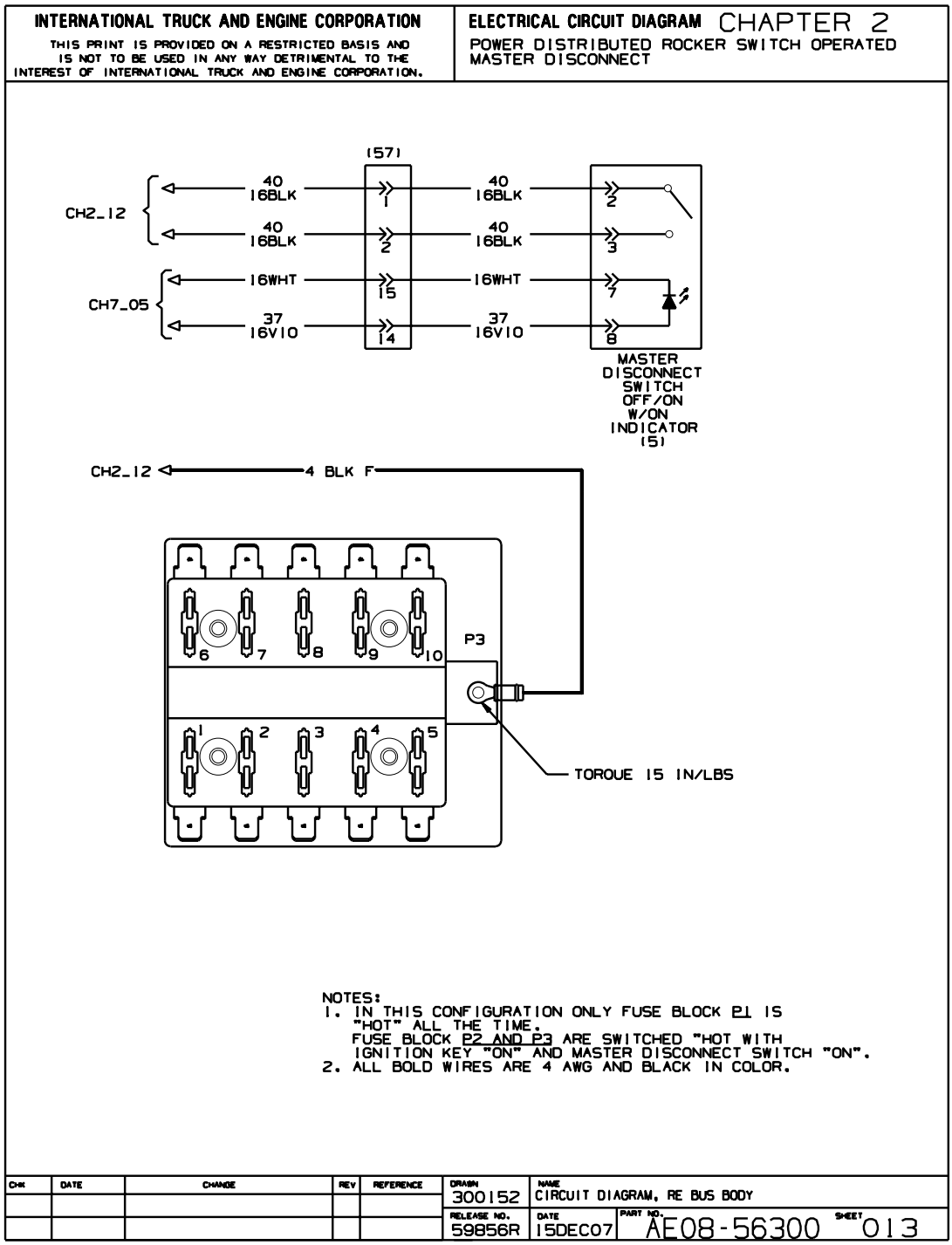

Figure 51 Power Distributed Rocker Switch Operated Master Disconnect

2.14. POWER DISTRIBUTED ROCKER SWITCH OPERATED NOISE KILL, P. 14

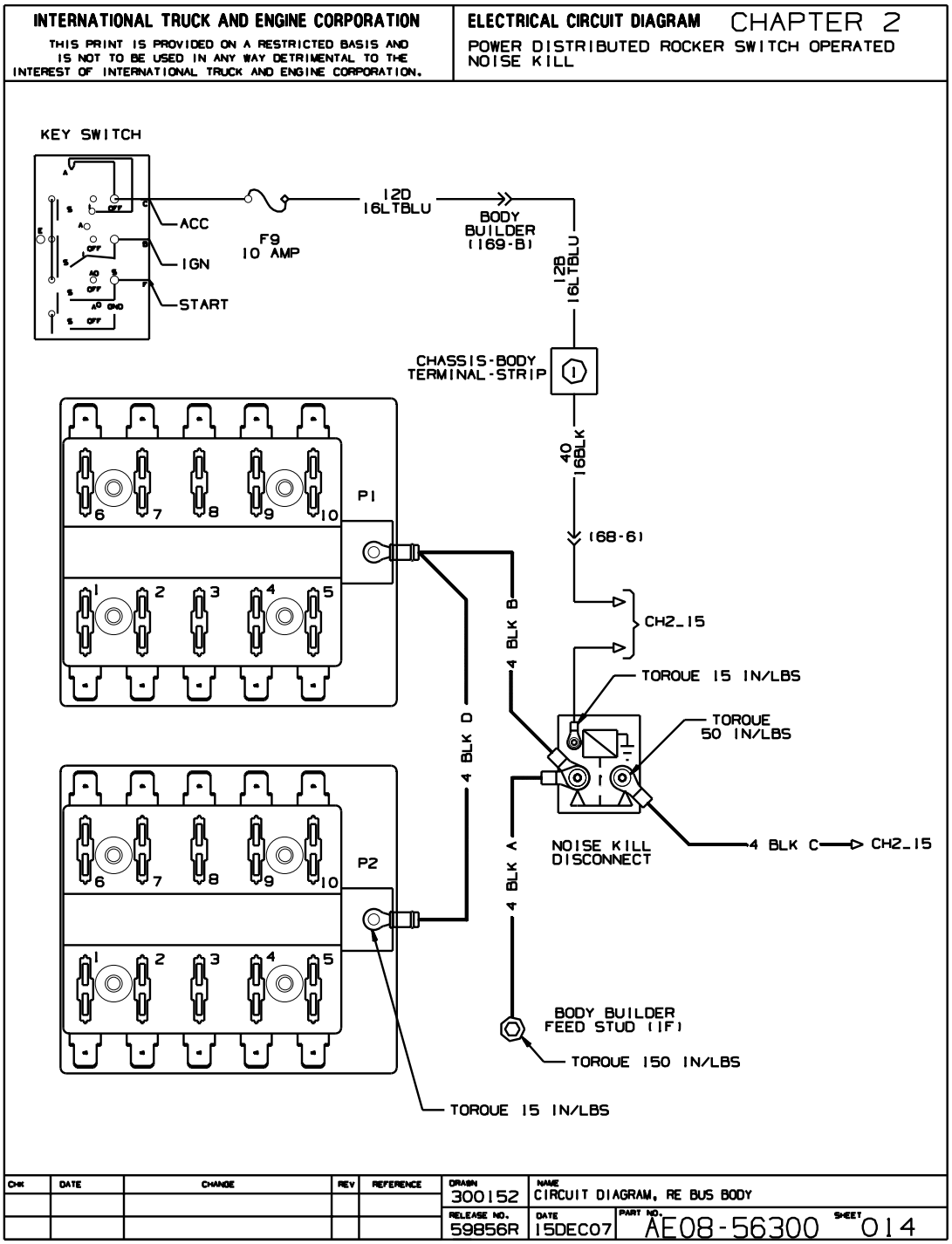

Figure 52 Power Distributed Rocker Switch Operated Noise Kill

2.15. POWER DISTRIBUTED ROCKER SWITCH OPERATED NOISE KILL, P. 15

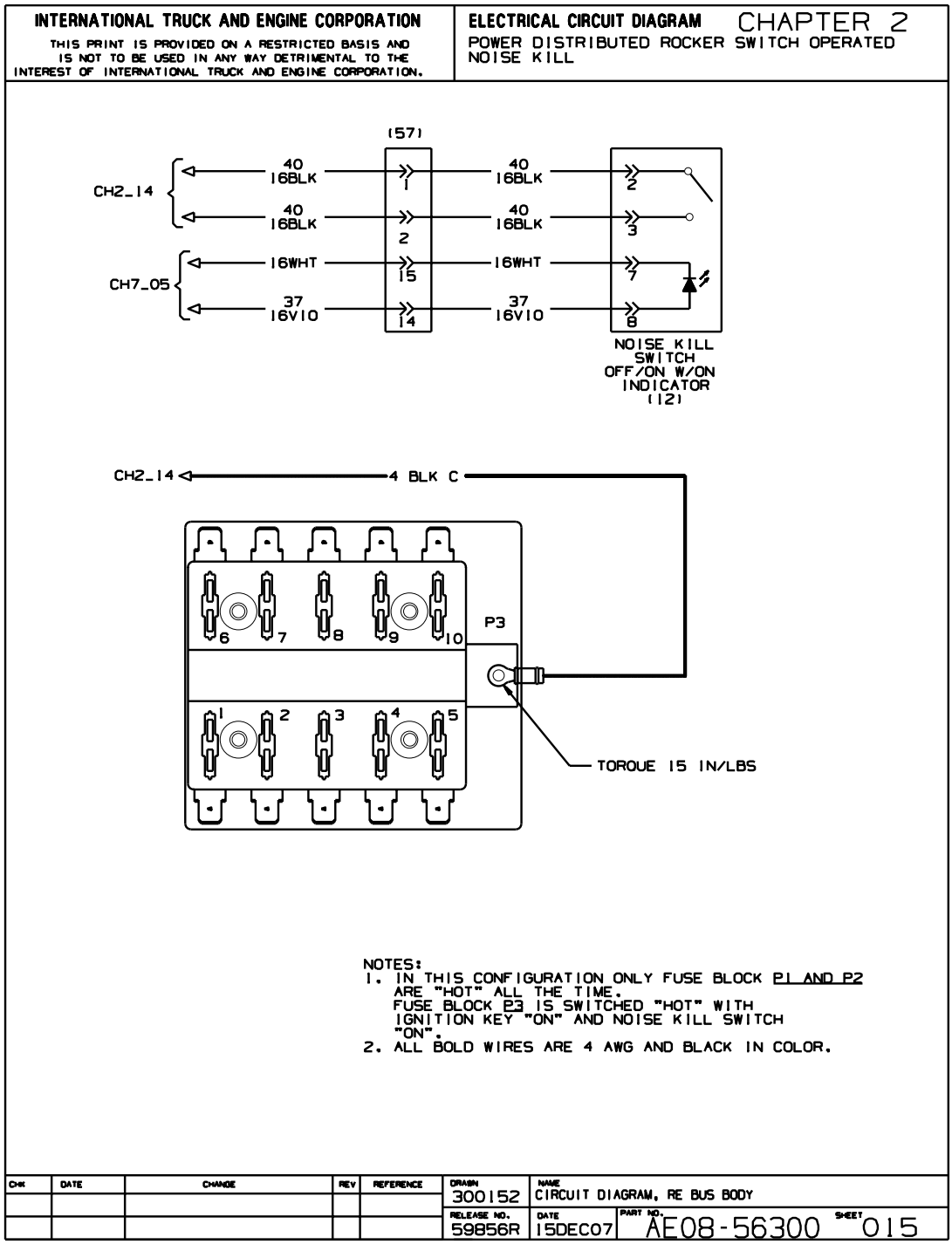

Figure 53 Power Distributed Rocker Switch Operated Noise Kill

2.16. POWER DISTRIBUTION IGNITION OPERATED MASTER DISCONNECT, P. 16

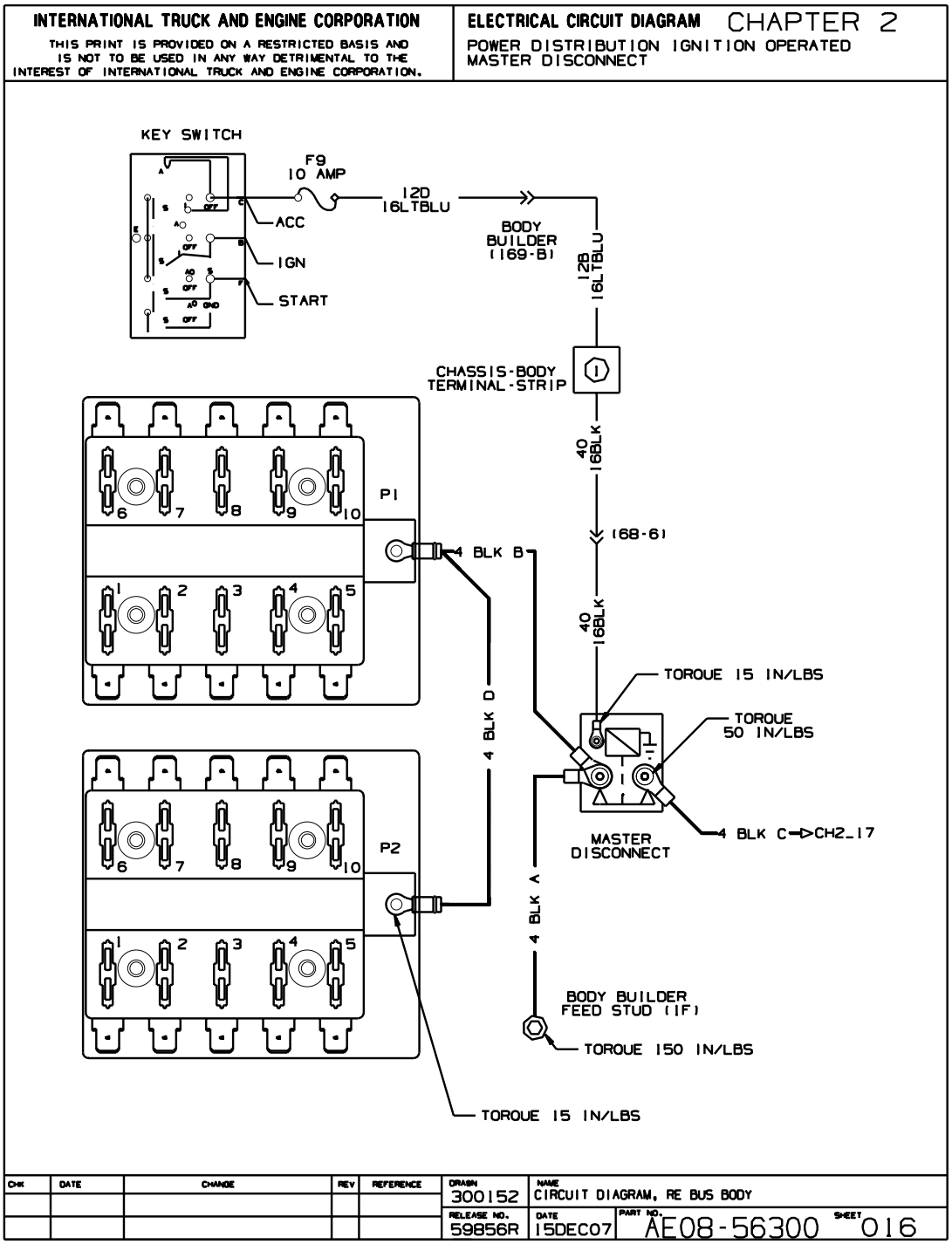

Figure 54 Power Distribution Ignition Operated Master Disconnect

2.17. POWER DISTRIBUTION IGNITION OPERATED MASTER DISCONNECT, P. 17

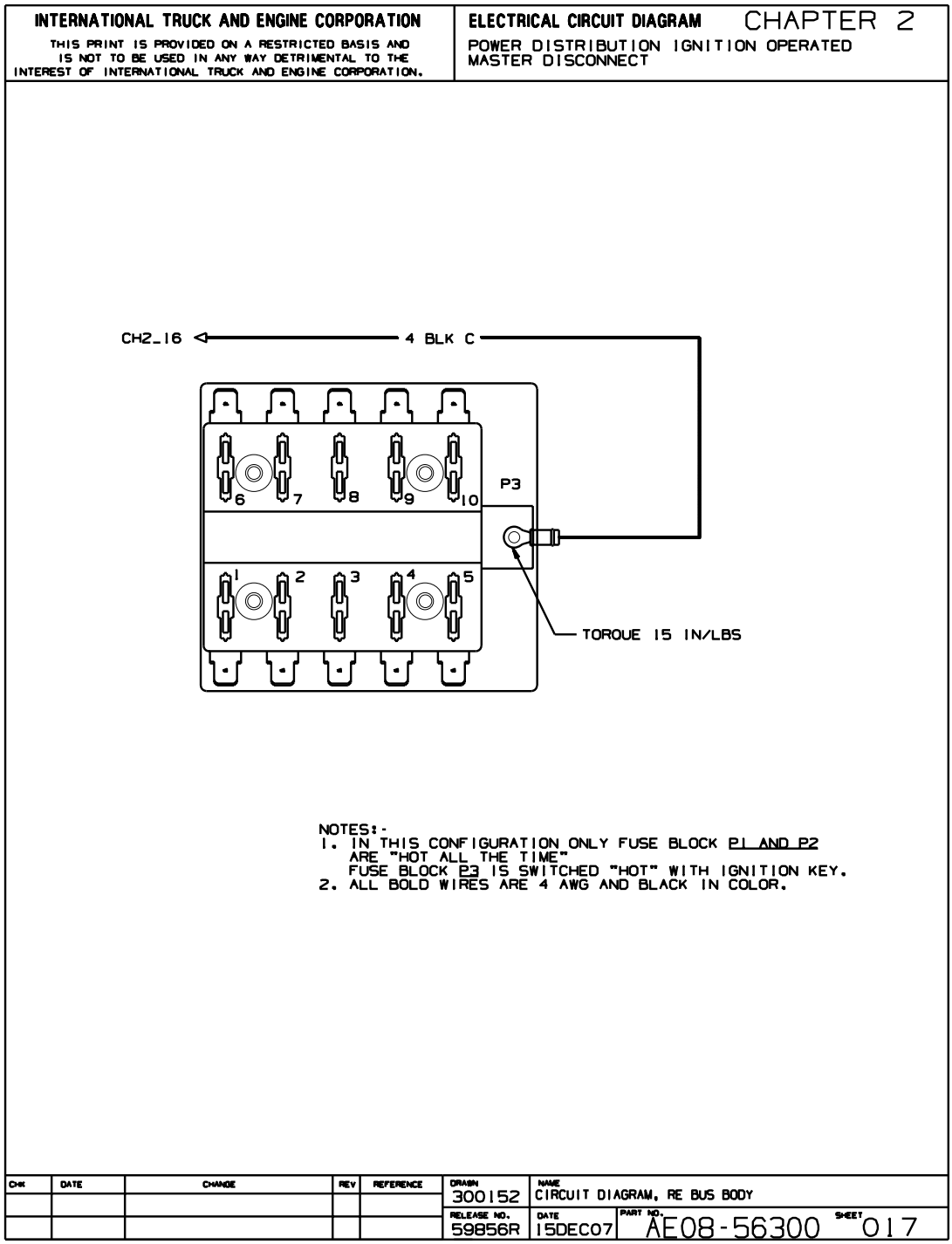

Figure 55 Power Distribution Ignition Operated Master Disconnect

2.18. POWER DISTRIBUTION PB30500, P. 18

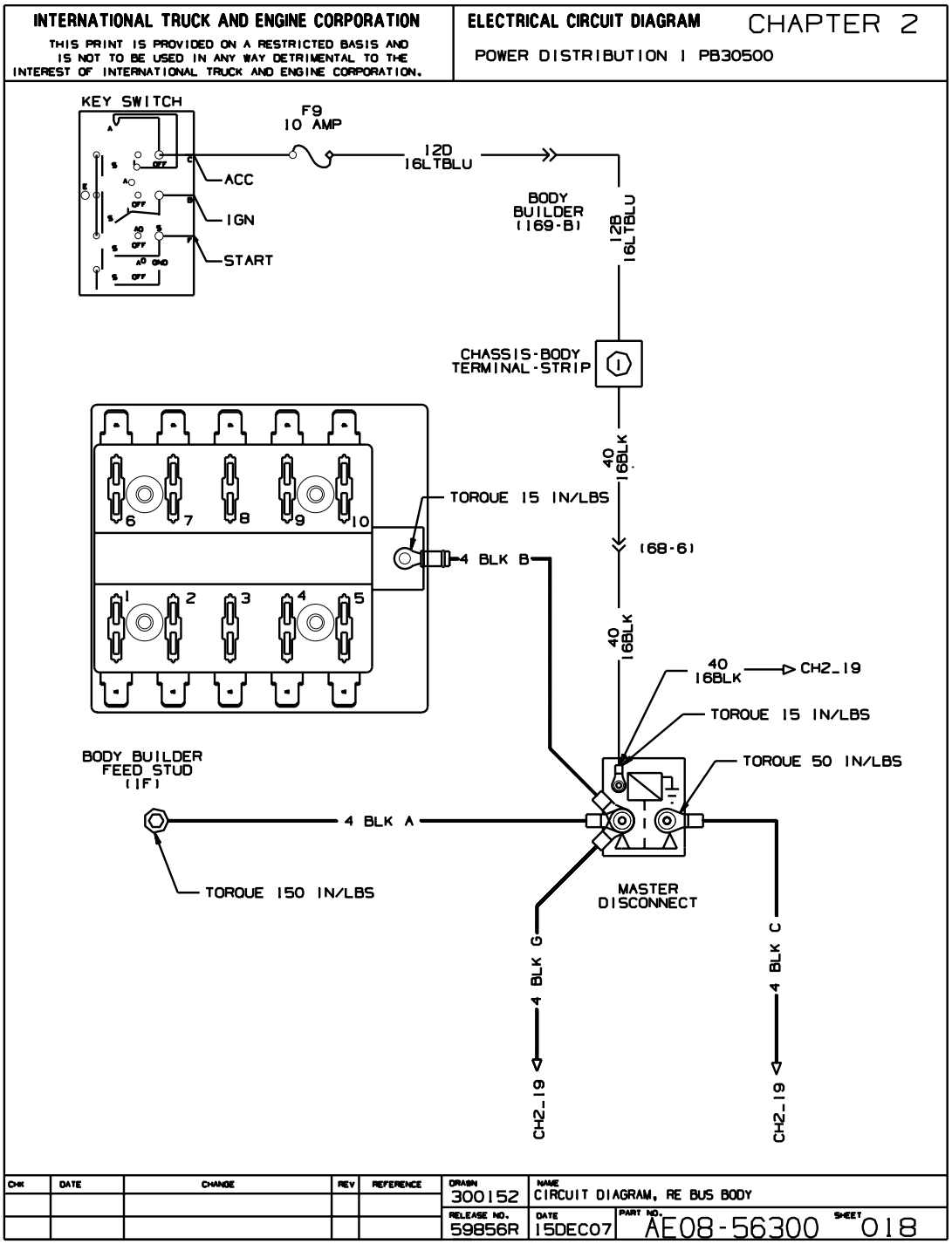

Figure 56 Power Distribution PB30500

2.19. POWER DISTRIBUTION PB30500, P. 19

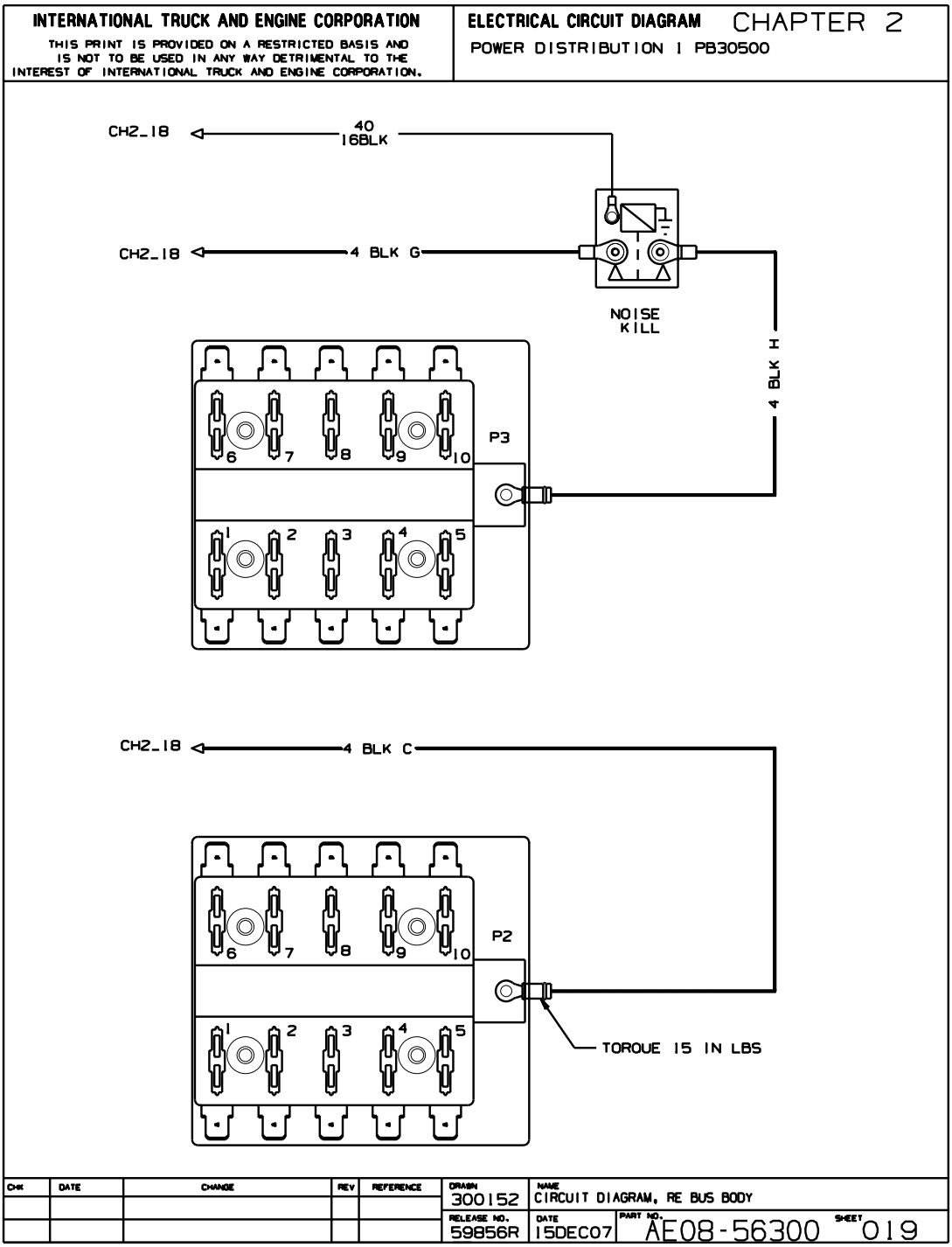

Figure 57 Power Distribution PB30500

2.20. IGNITION ACTIVATED MASTER DISCONNECT ROCKER SWITCH OPERATED NOISE KILL DISCONNECT, P. 20

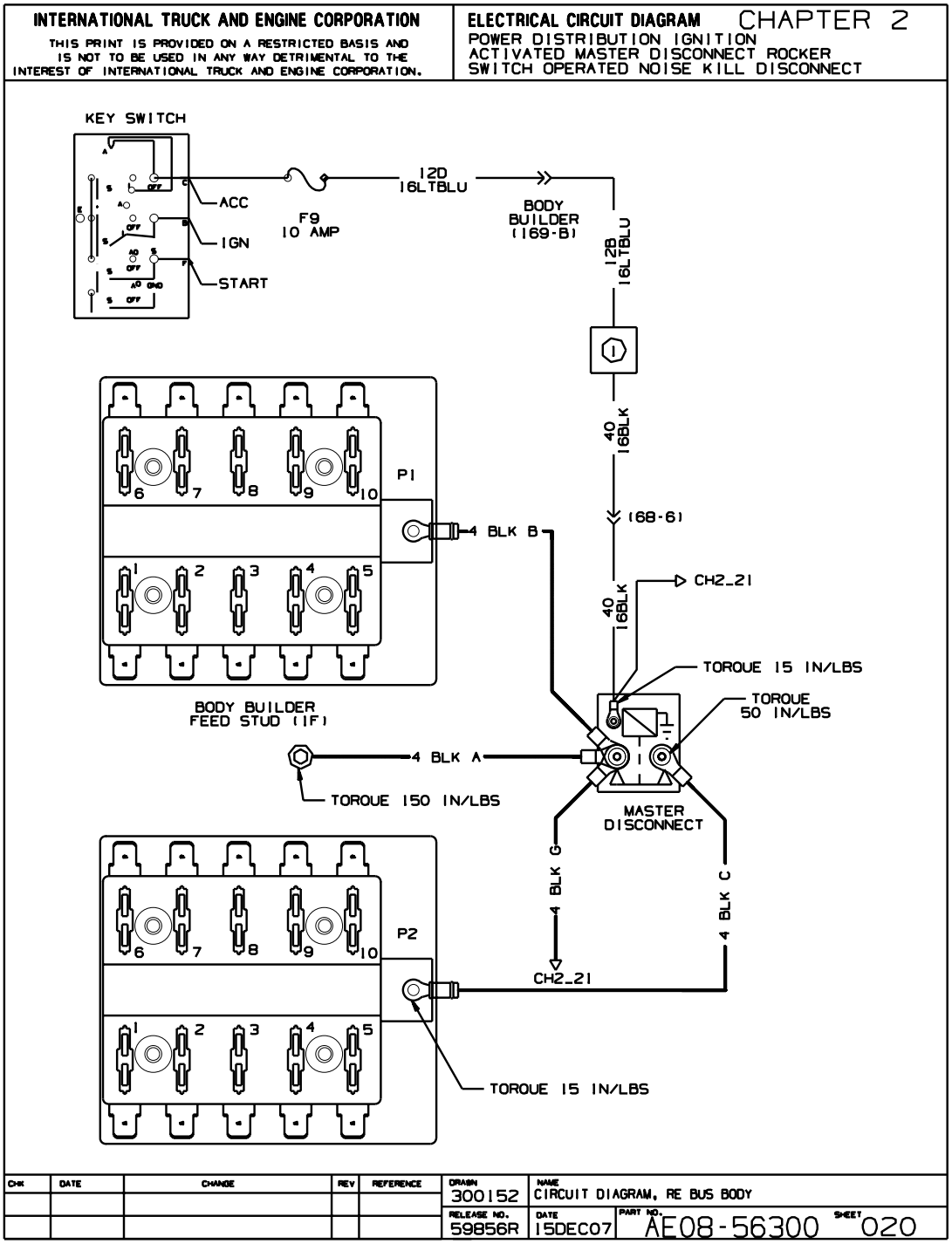

Figure 58 Ignition Activated Master Disconnect Rocker Switch Operated Noise Kill Disconnect

2.21. IGNITION ACTIVATED MASTER DISCONNECT ROCKER SWITCH OPERATED NOISE KILL DISCONNECT, P. 21

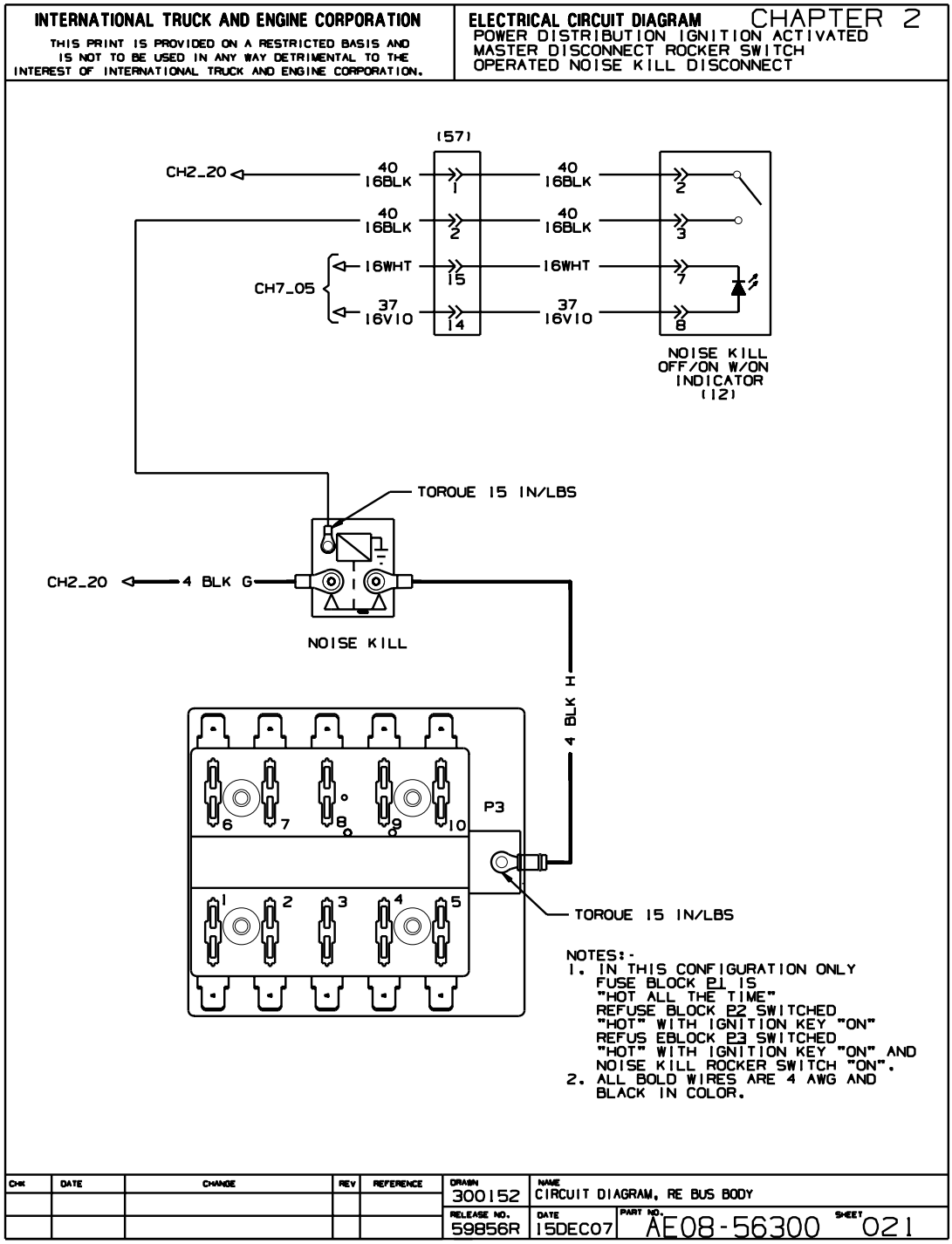

Figure 59 Ignition Activated Master Disconnect Rocker Switch Operated Noise Kill Disconnect

3. WARNING LIGHT SYSTEMS (CHAPTER 3)

3.1. WARNING LIGHTS — ELS, P. 1

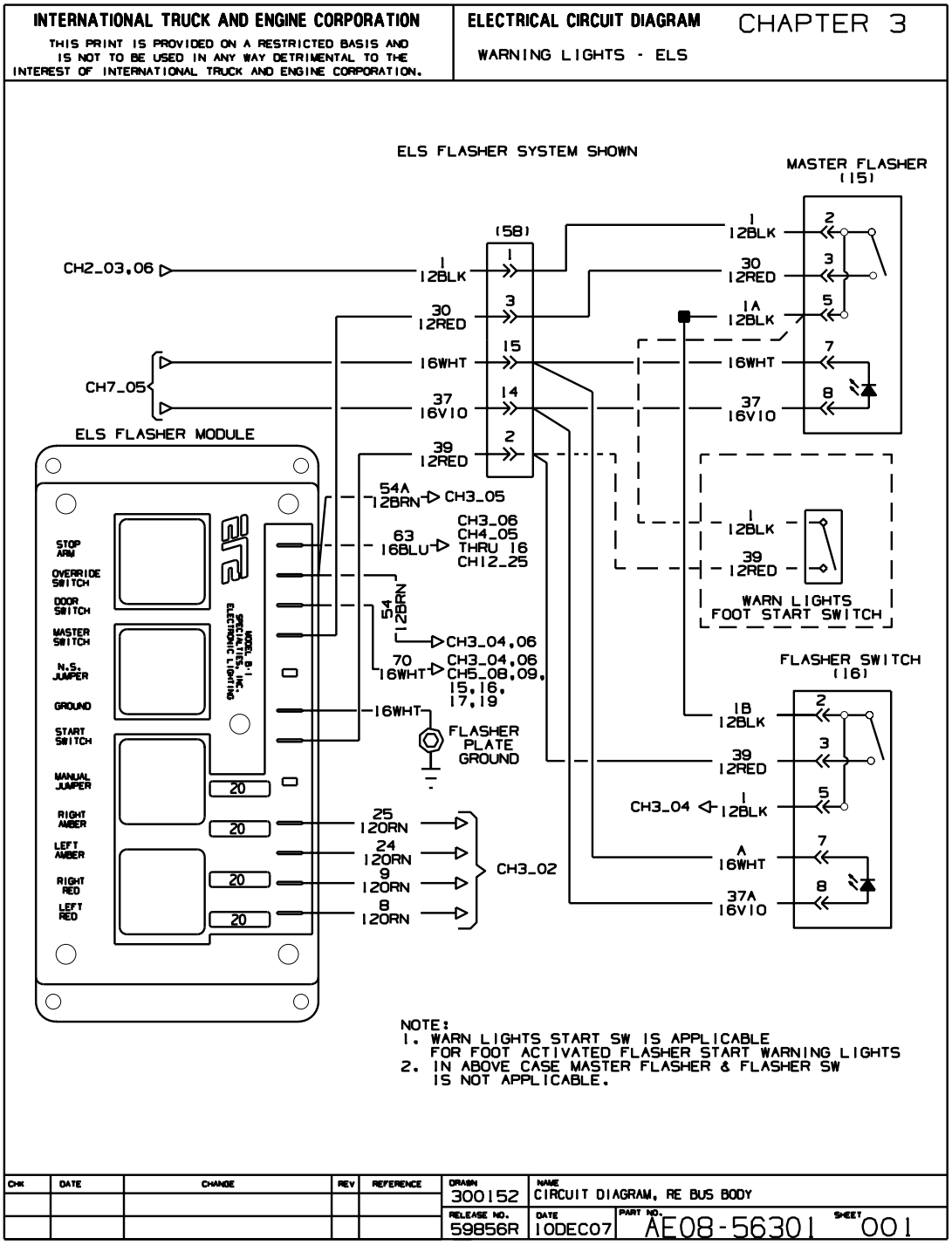

Figure 60 Warning Lights — ELS

3.2. WARNING LIGHTS, P. 2

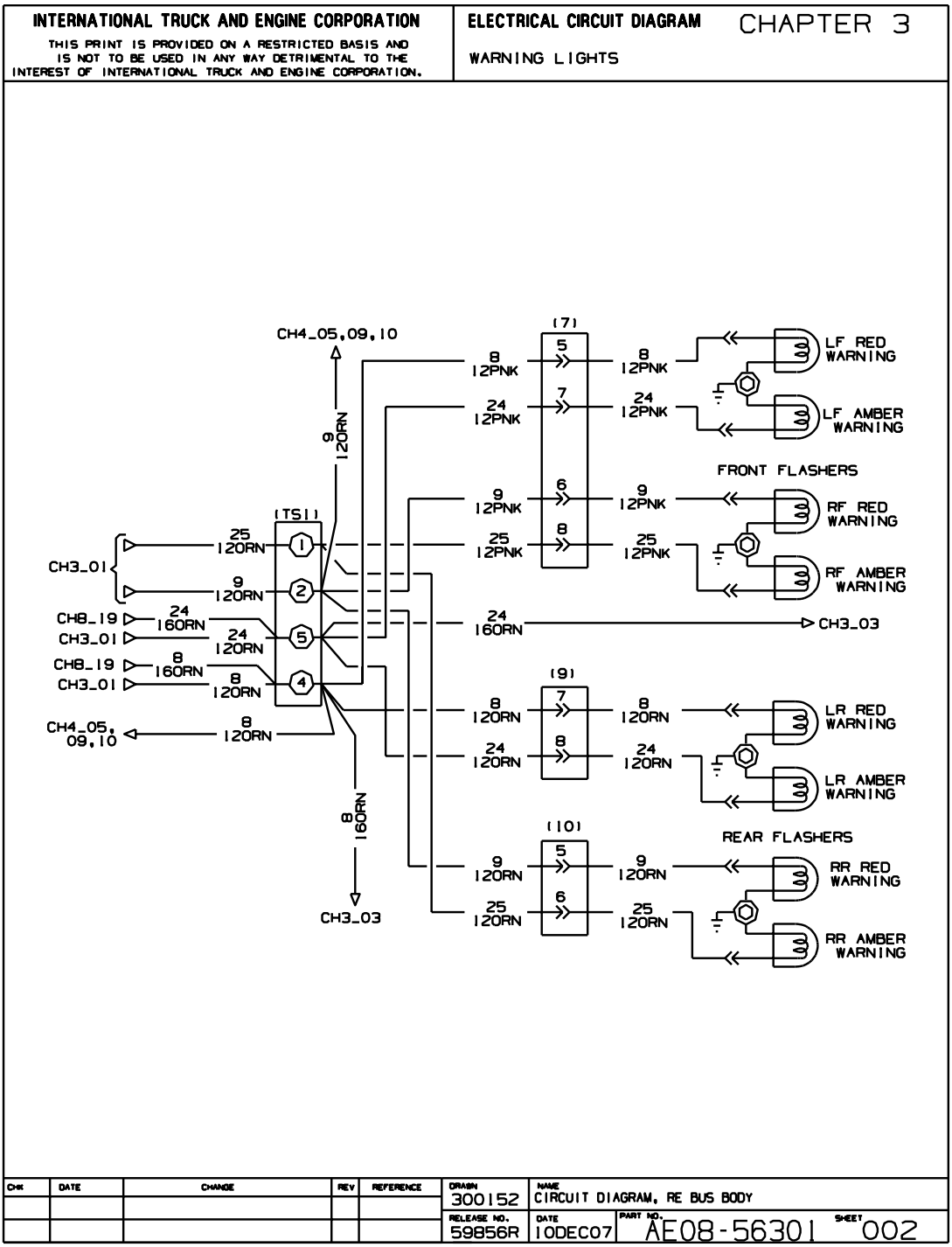

Figure 61 Warning Lights

3.3. INDICATOR LIGHTS FOR WARNING LIGHT SYSTEM IN RIGHT SWITCH PANEL, P. 3

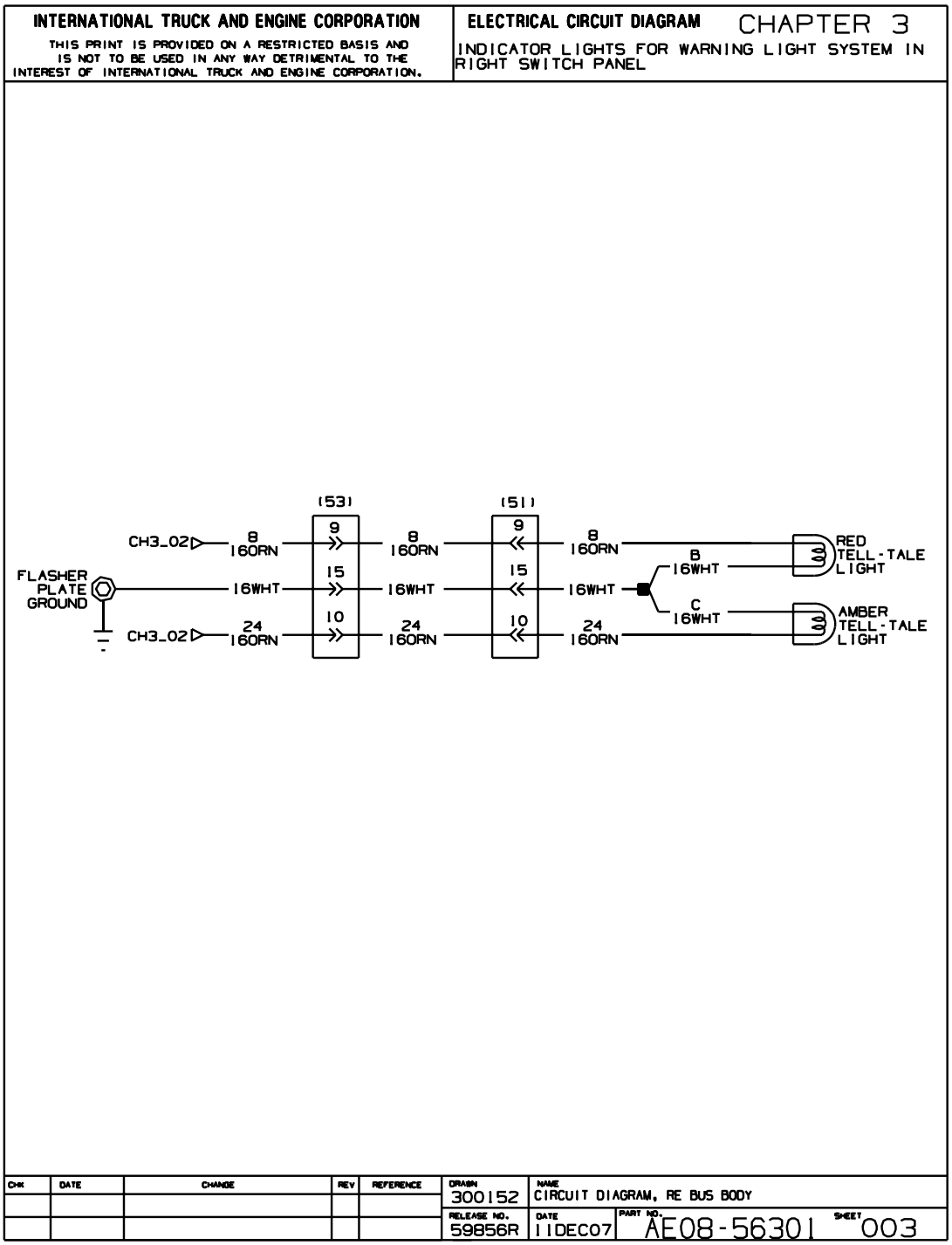

Figure 62 Indicator Lights for Warning Light System in Right Switch Panel

3.4. OVERRIDE, P. 4

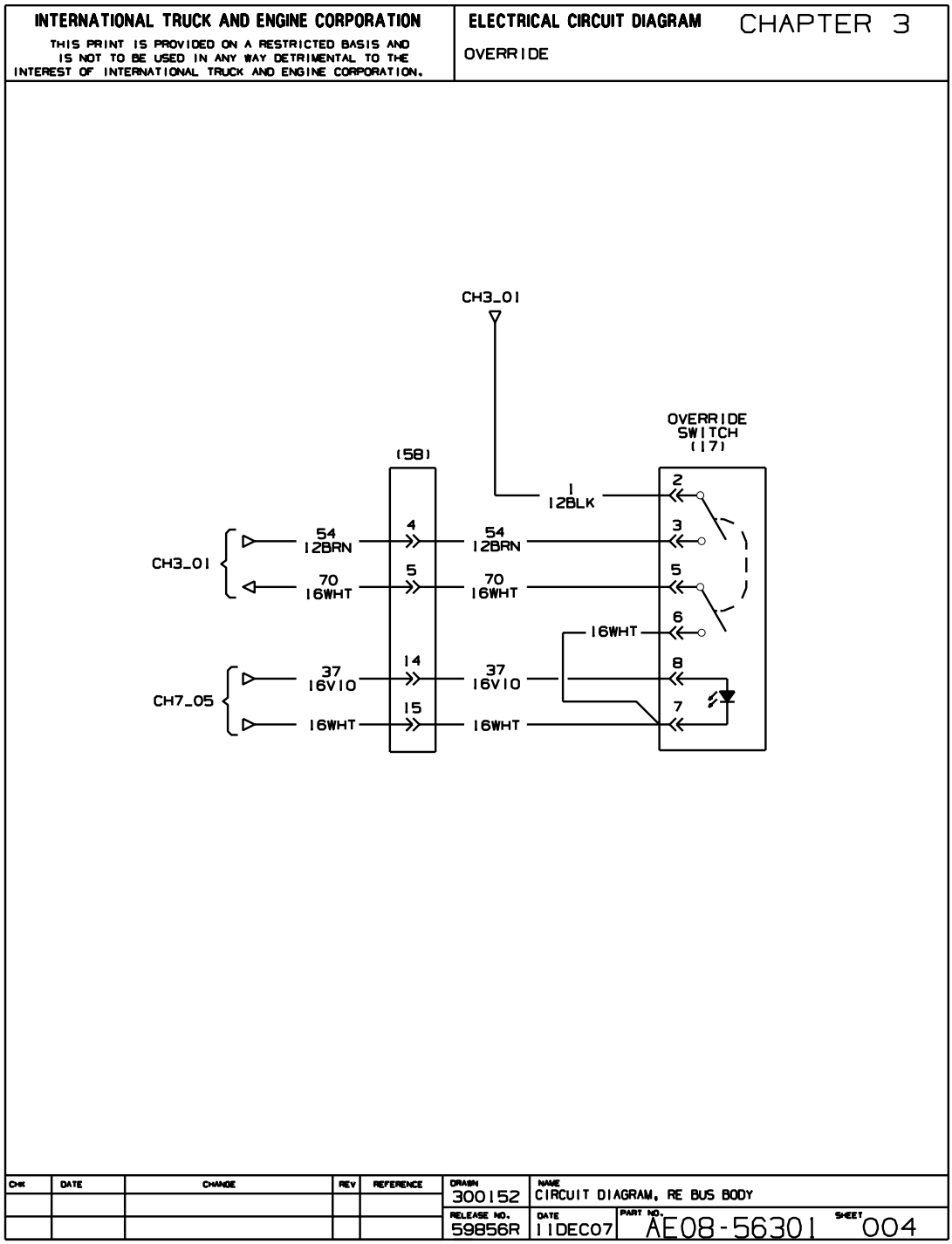

Figure 63 Override

3.5. OVERRIDE ON A SEPARATE SWITCH, P. 5

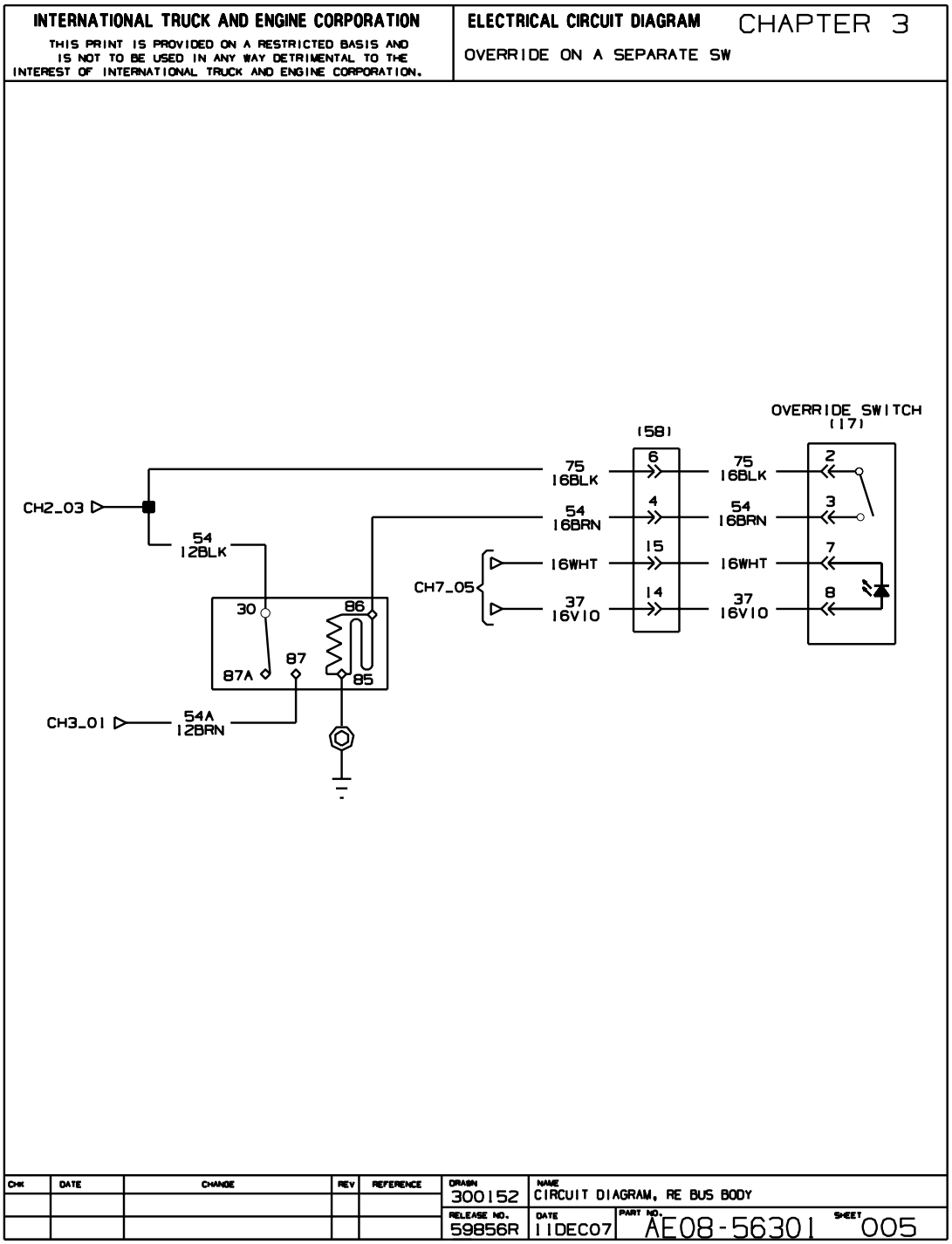

Figure 64 Override on a Separate Switch

3.6. ALWAYS HOT OVERRIDE ROCKER SWITCH (WITH MANUAL DOOR), P. 6

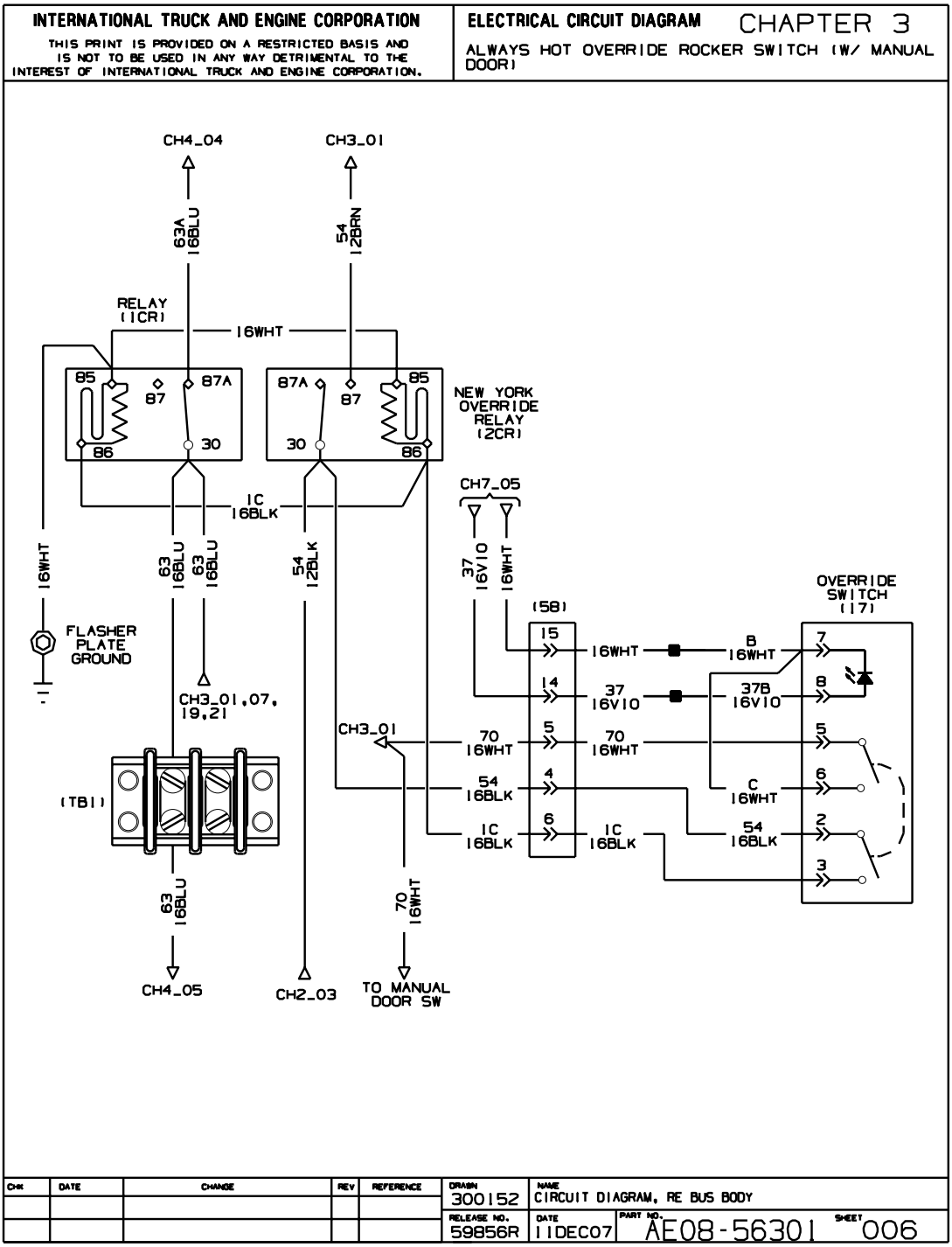

Figure 65 Always hot Override Rocker Switch (with Manual Door)

3.7. WELDON FLASHER SYSTEM WITH MASTER FLASHER SWITCH AND FLASHER LIGHT START SWITCH, P. 7

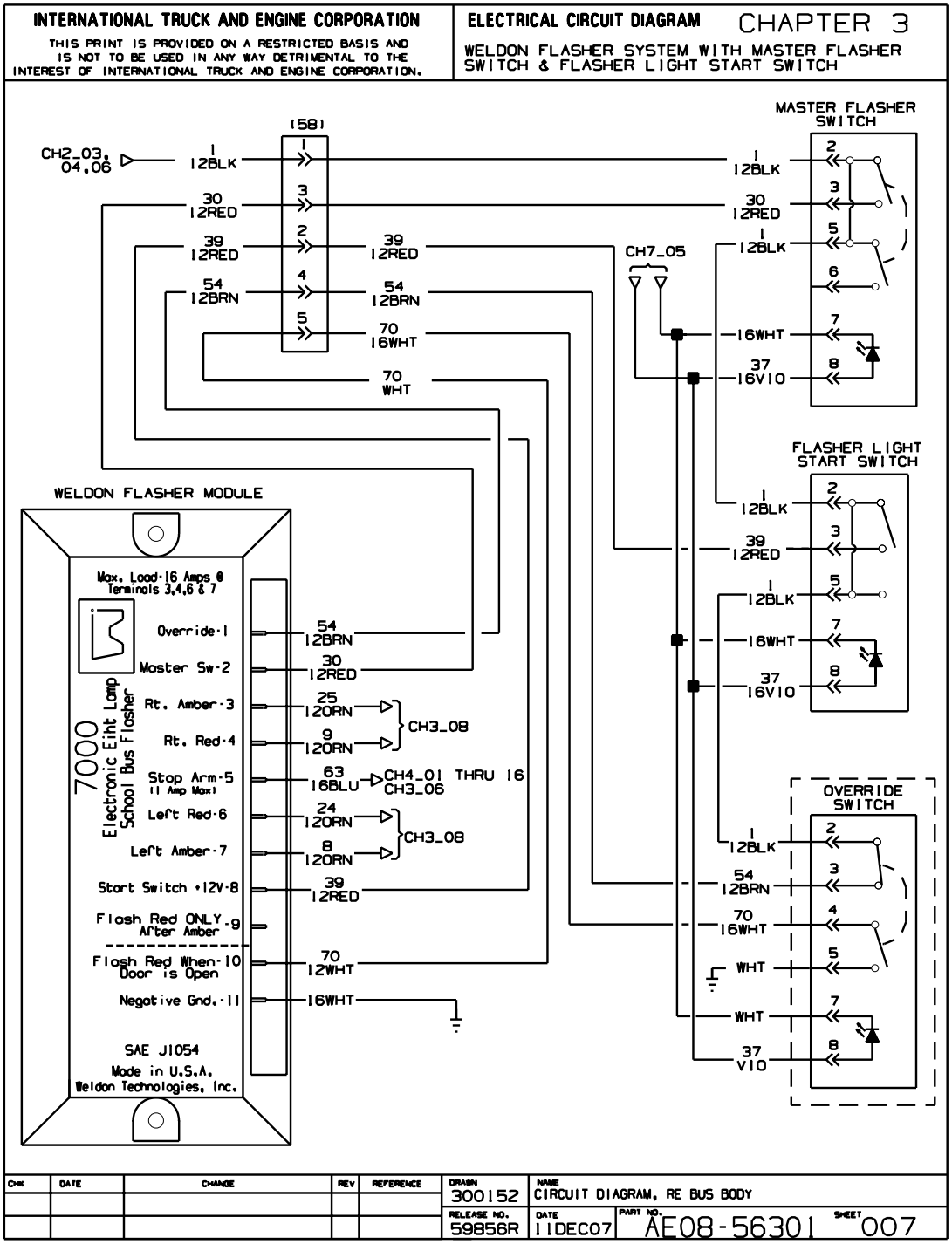

Figure 66 Weldon Flasher System with Master Flasher Switch and Flasher Light Start Switch

3.8. WARNING LIGHTS SYSTEM, P. 8

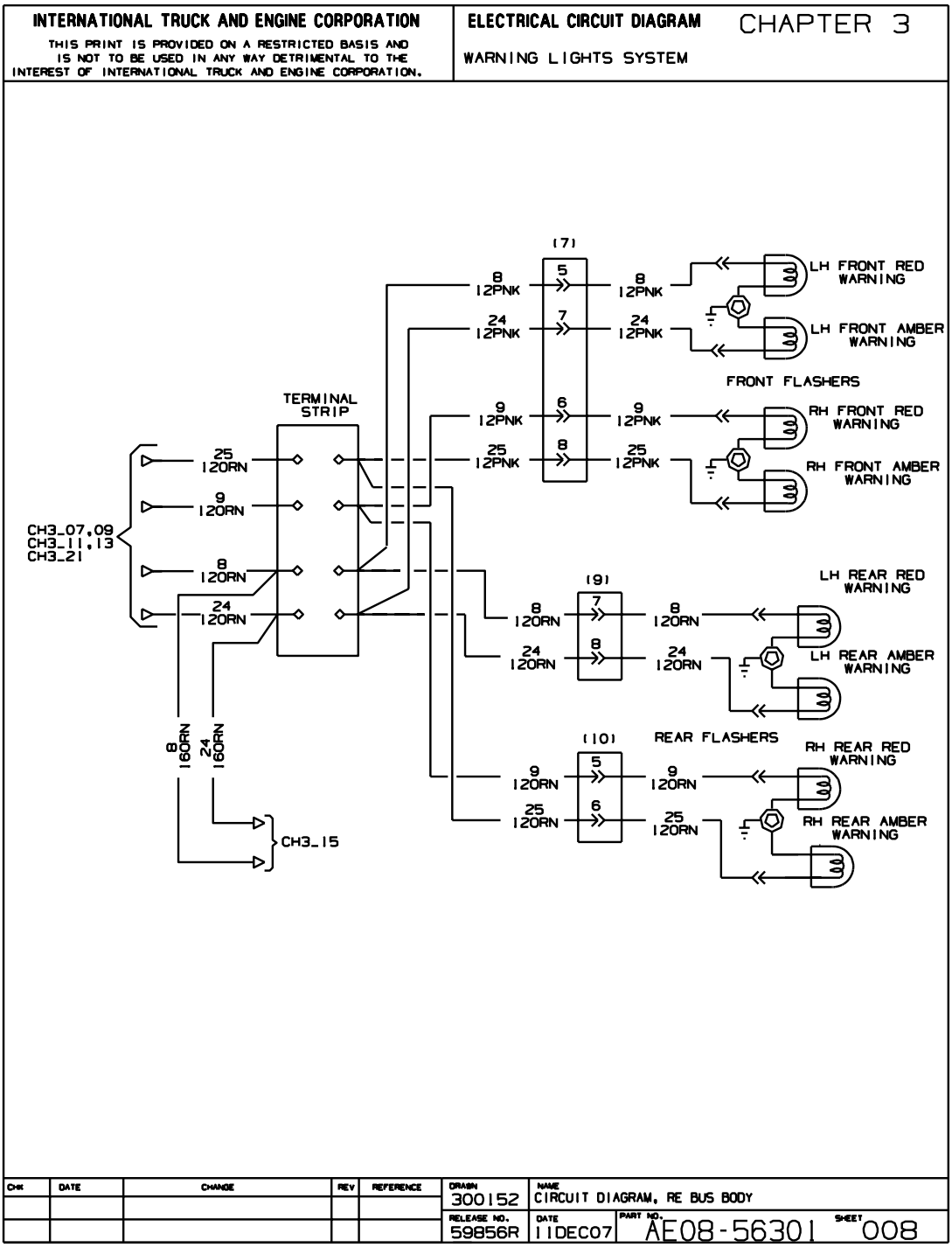

Figure 67 Warning Lights System

3.9. WARNING LIGHTS SYSTEM — FLORIDA, P. 9

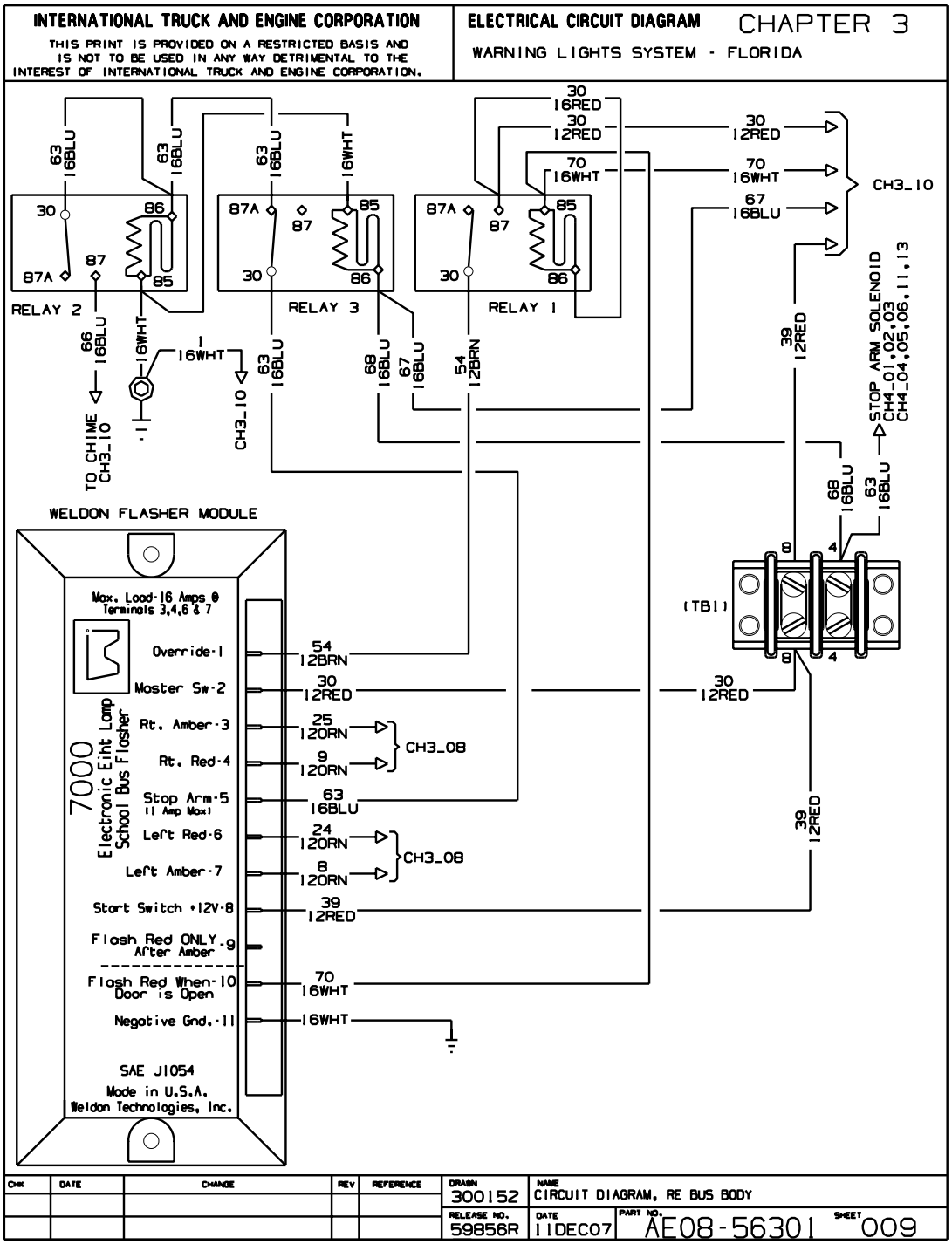

Figure 68 Warning Lights System — Florida

3.10. WARNING LIGHTS SYSTEM — FLORIDA, P. 10

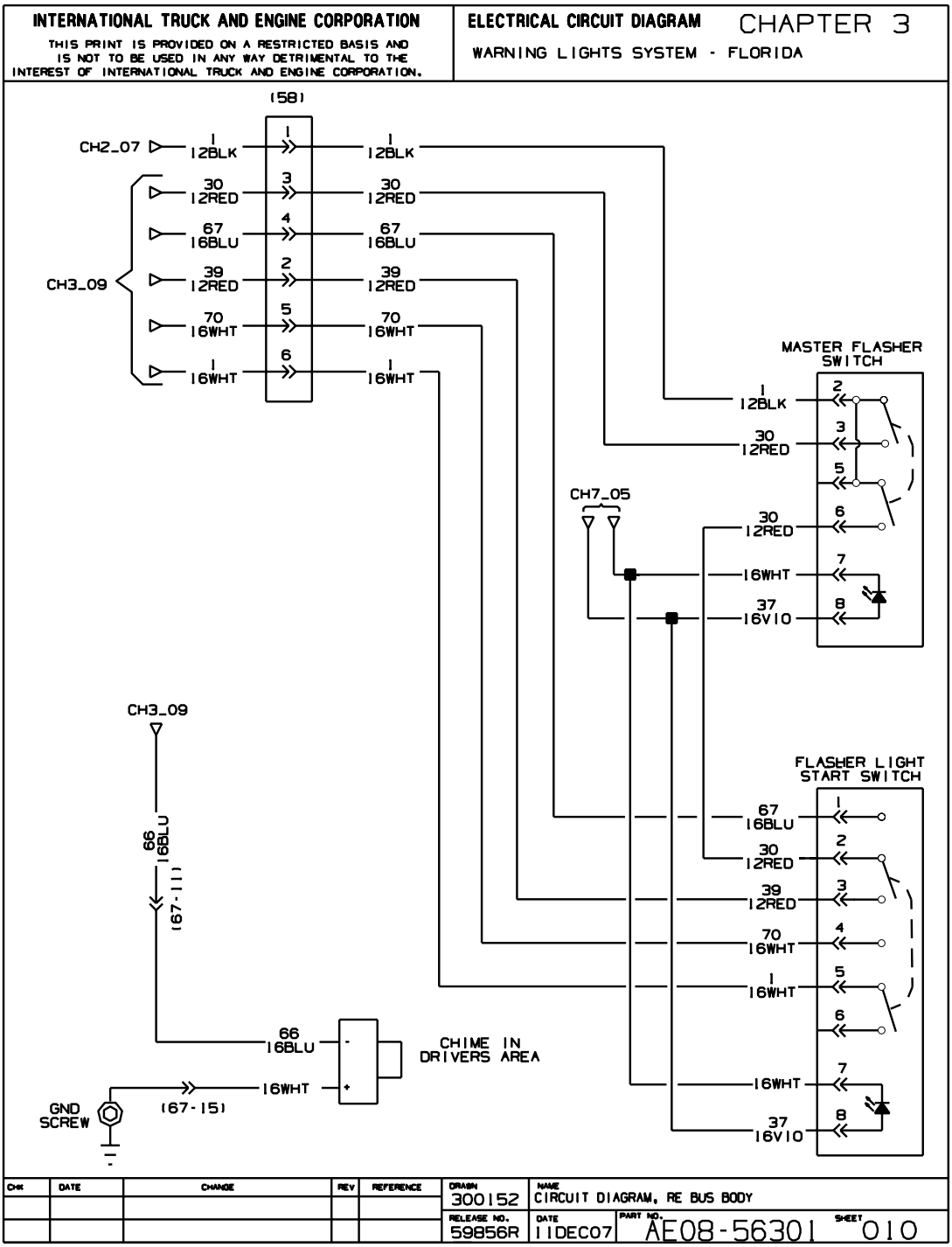

Figure 69 Warning Lights System — Florida

3.11. WARNING LIGHTS SYSTEM — VIRGINIA, P. 11

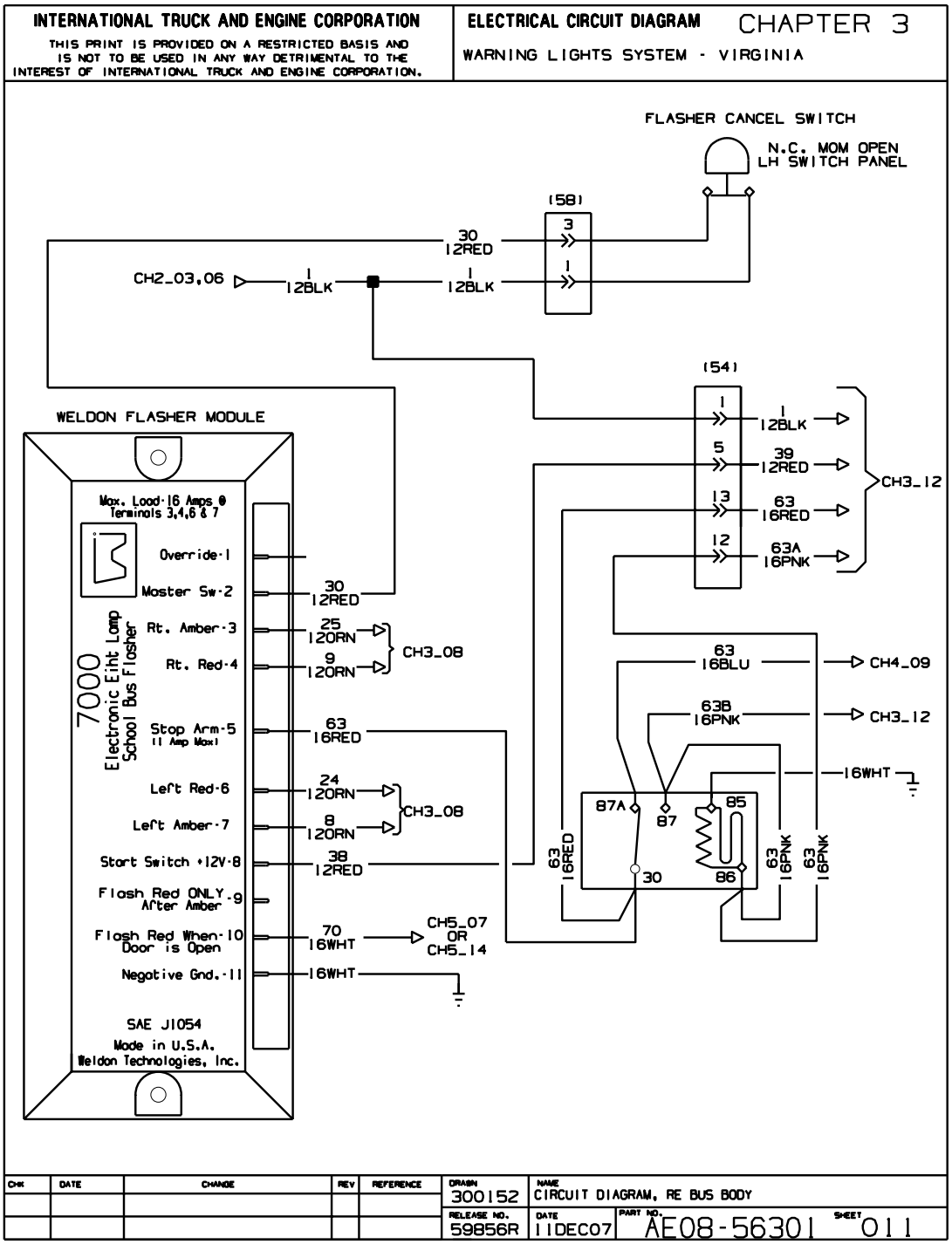

Figure 70 Warning Lights System — Virginia

3.12. WARNING LIGHTS SYSTEM — VIRGINIA, P. 12

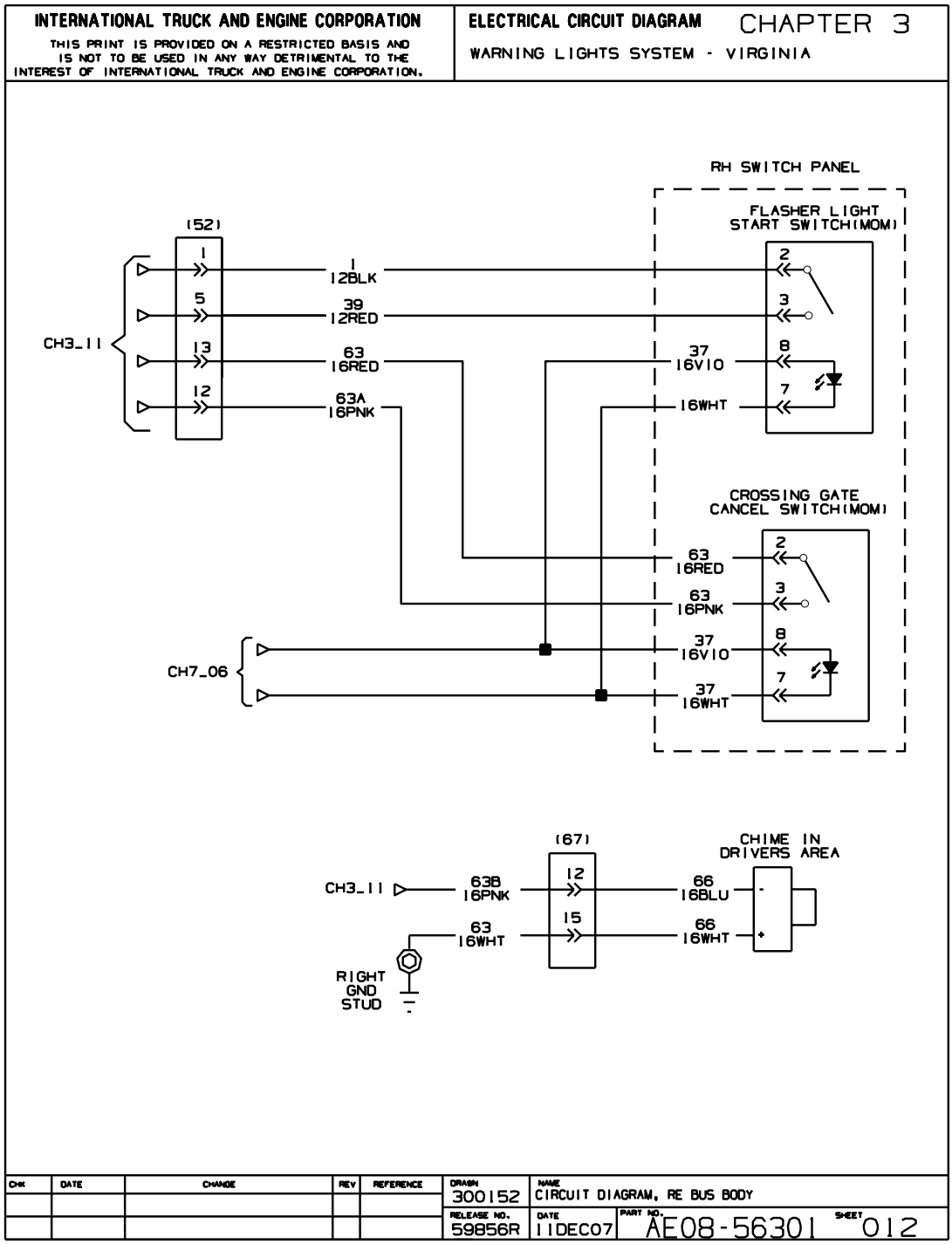

Figure 71 Warning Lights System — Virginia

3.13. WARNING LIGHTS SYSTEM — MARYLAND, P. 13

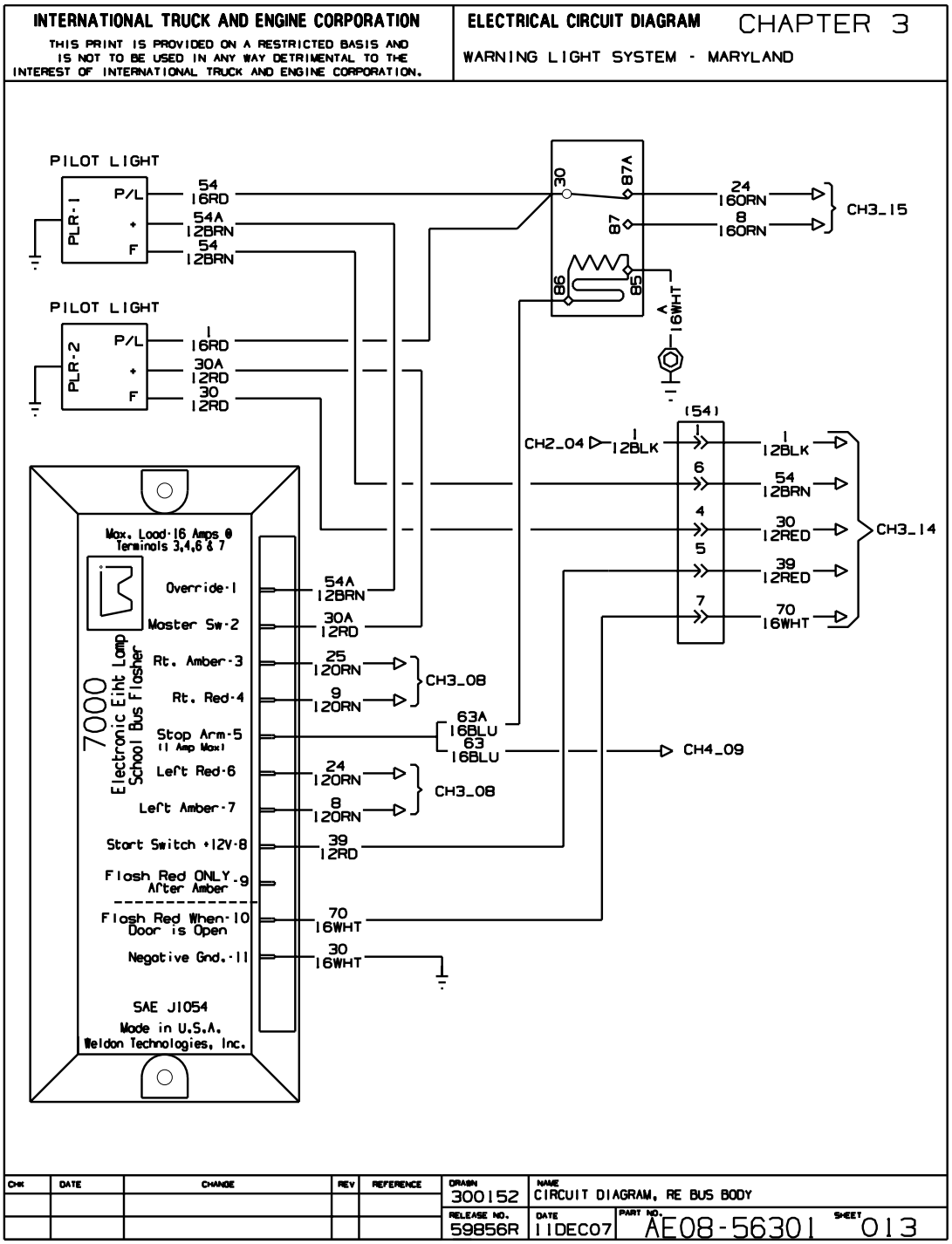

Figure 72 Warning Lights System — Maryland

3.14. WARNING LIGHTS SYSTEM — MARYLAND, P. 14

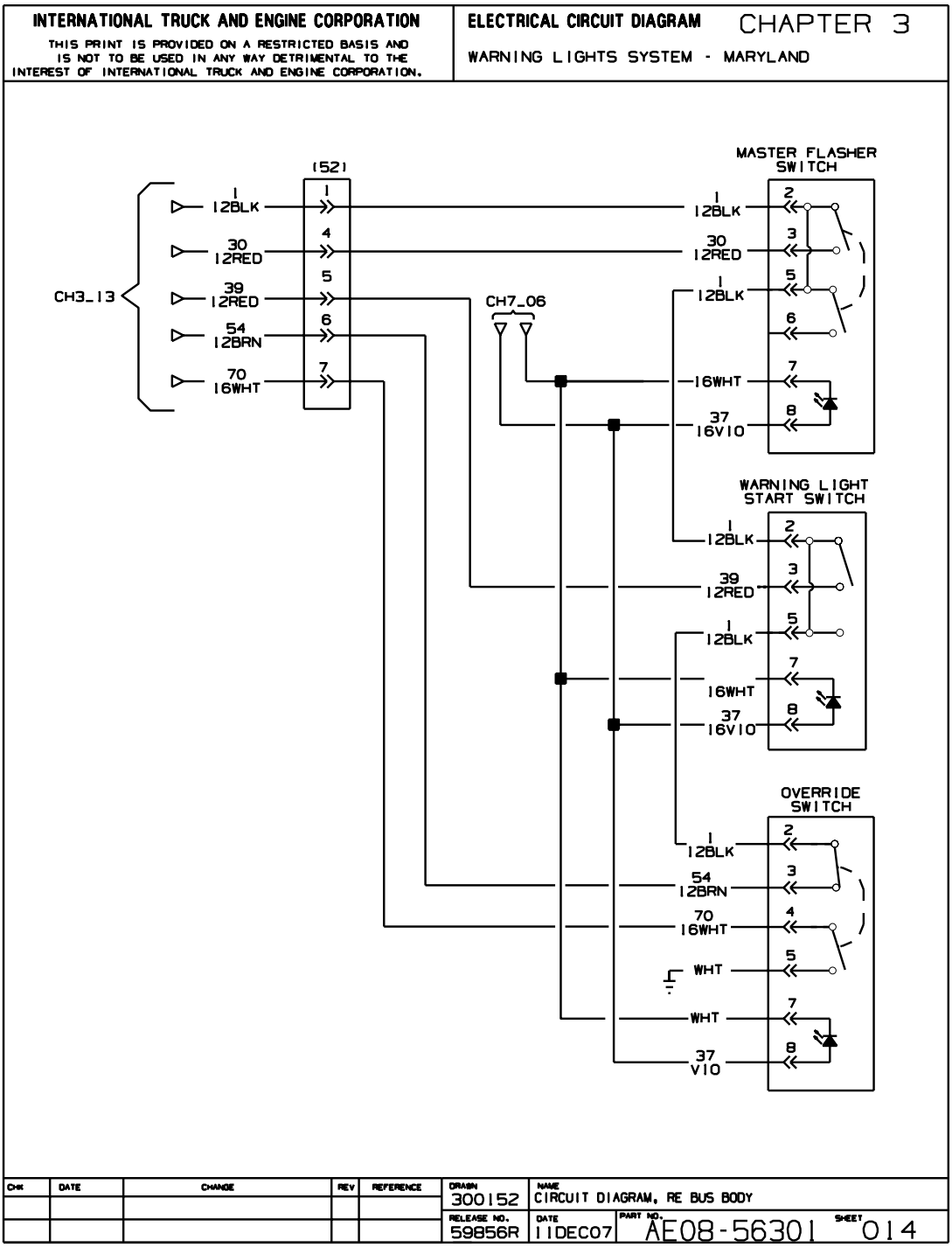

Figure 73 Warning Lights System — Maryland

3.15. WARNING LIGHTS SYSTEM — MARYLAND, P. 15

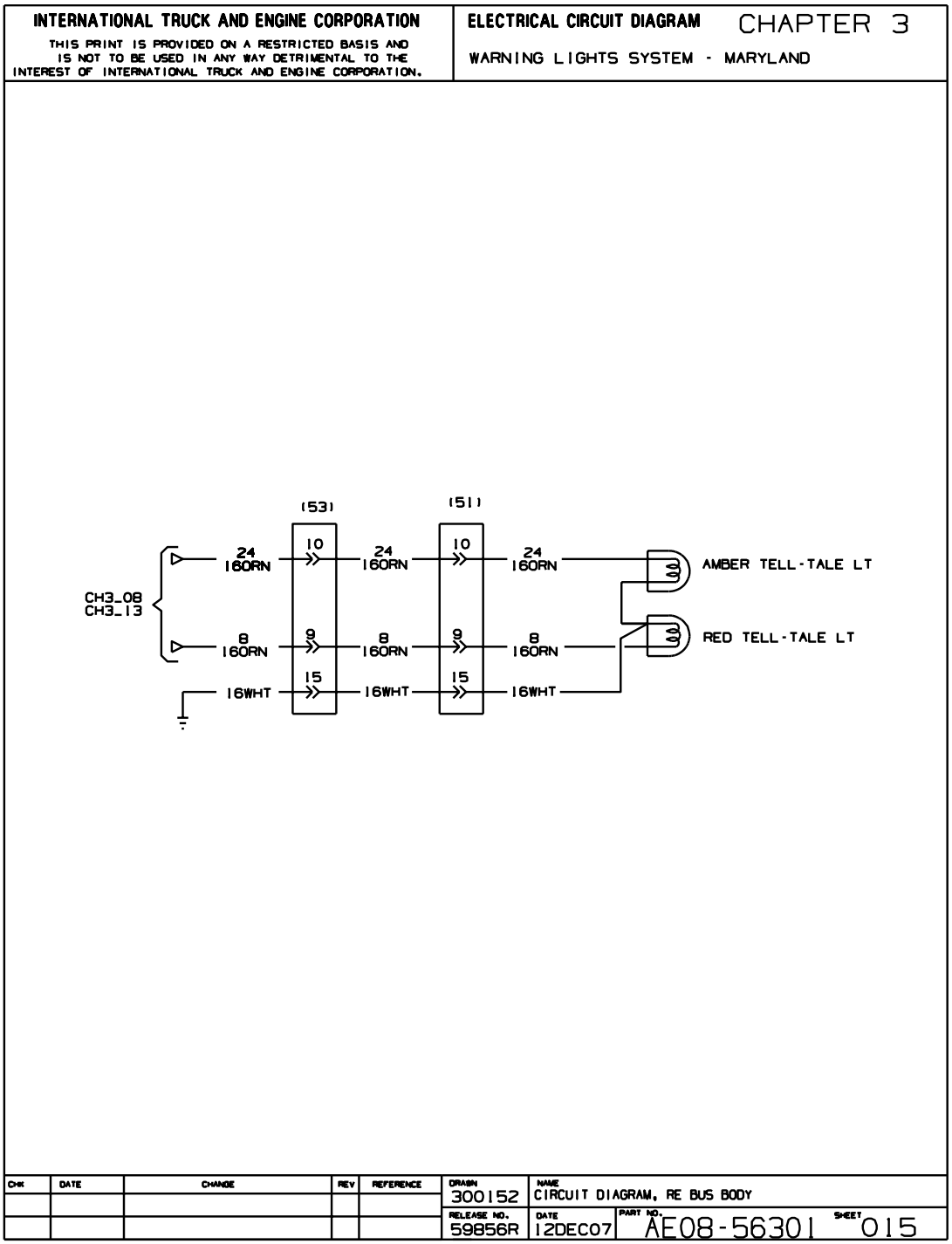

Figure 74 Warning Lights System — Maryland

3.16. WARNING LIGHTS SYSTEM — WEST VIRGINIA, P. 16

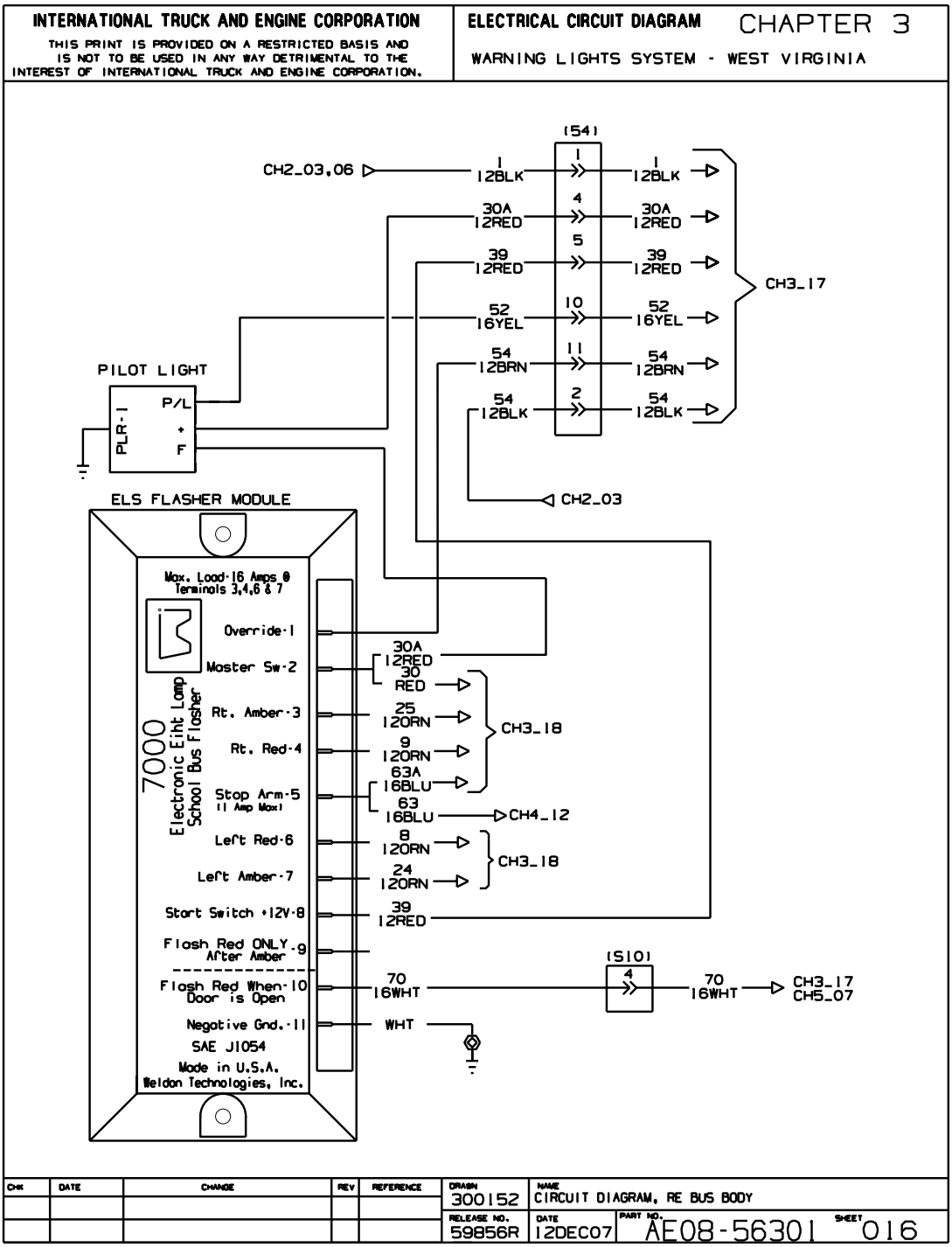

Figure 75 Warning Lights System — West Virginia

3.17. WARNING LIGHTS SYSTEM — WEST VIRGINIA, P. 17

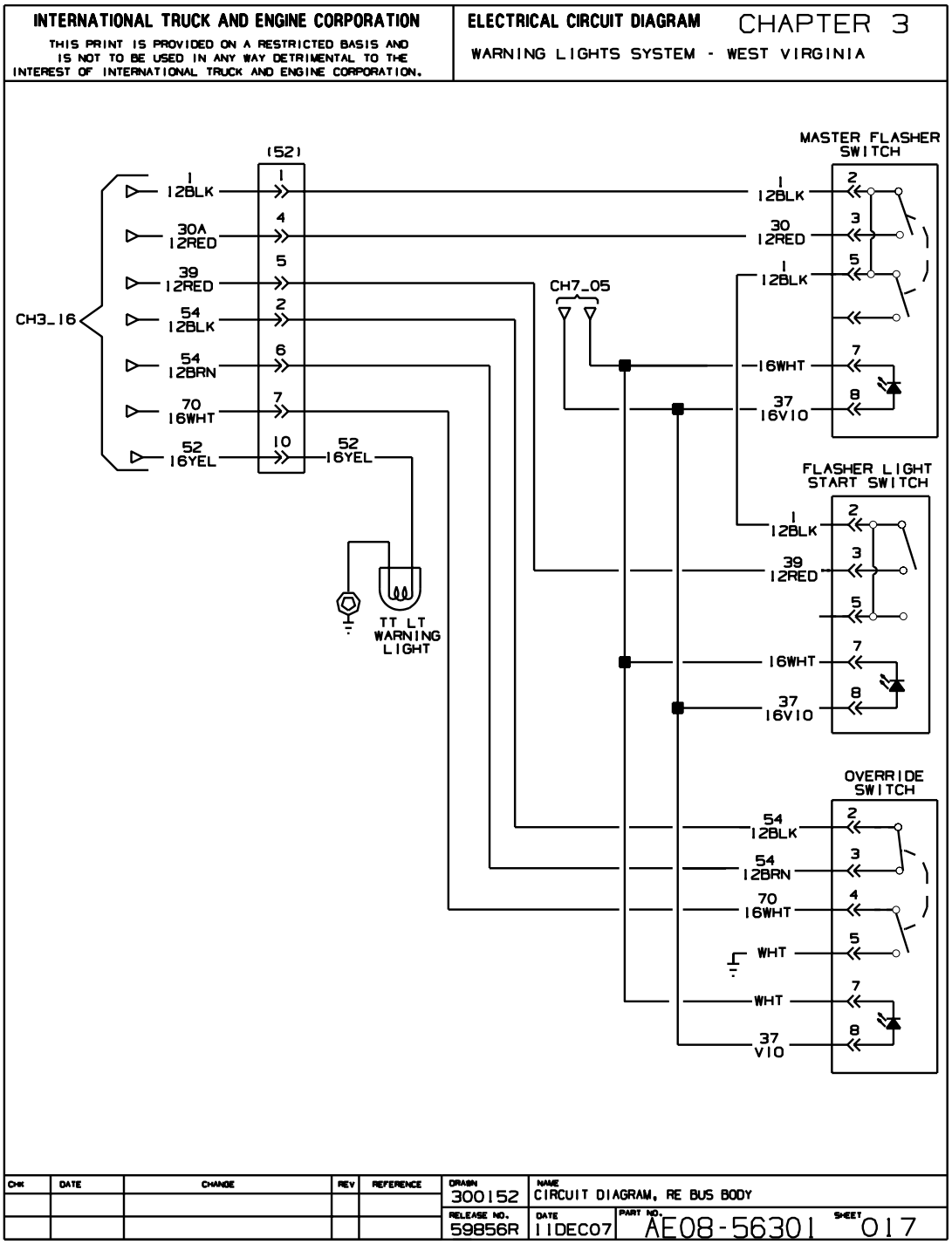

Figure 76 Warning Lights System — West Virginia

3.18. WARNING LIGHTS SYSTEM — WEST VIRGINIA, P. 18

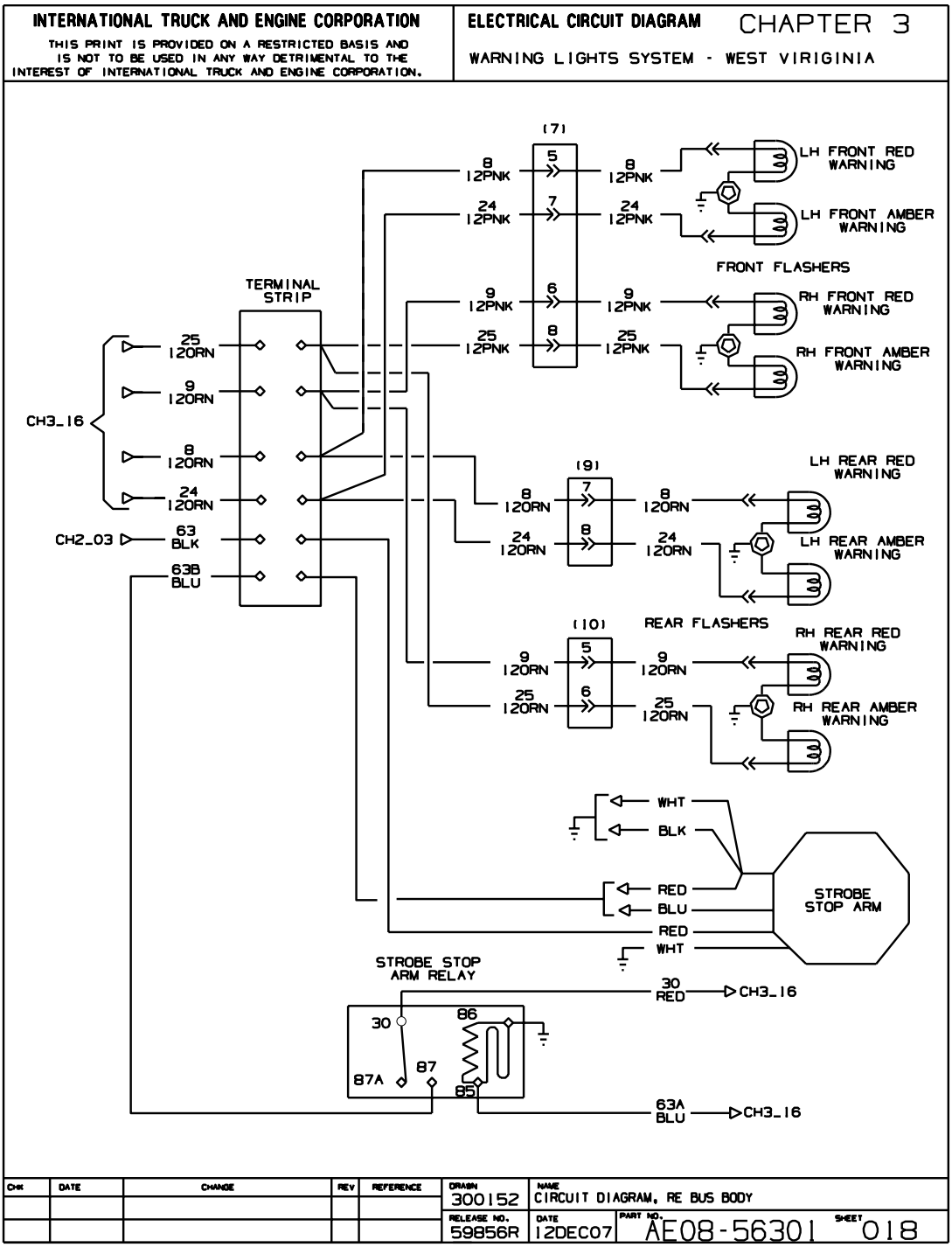

Figure 77 Warning Lights System — West Virginia

3.19. WARNING LIGHTS SYSTEM — OHIO, P. 19

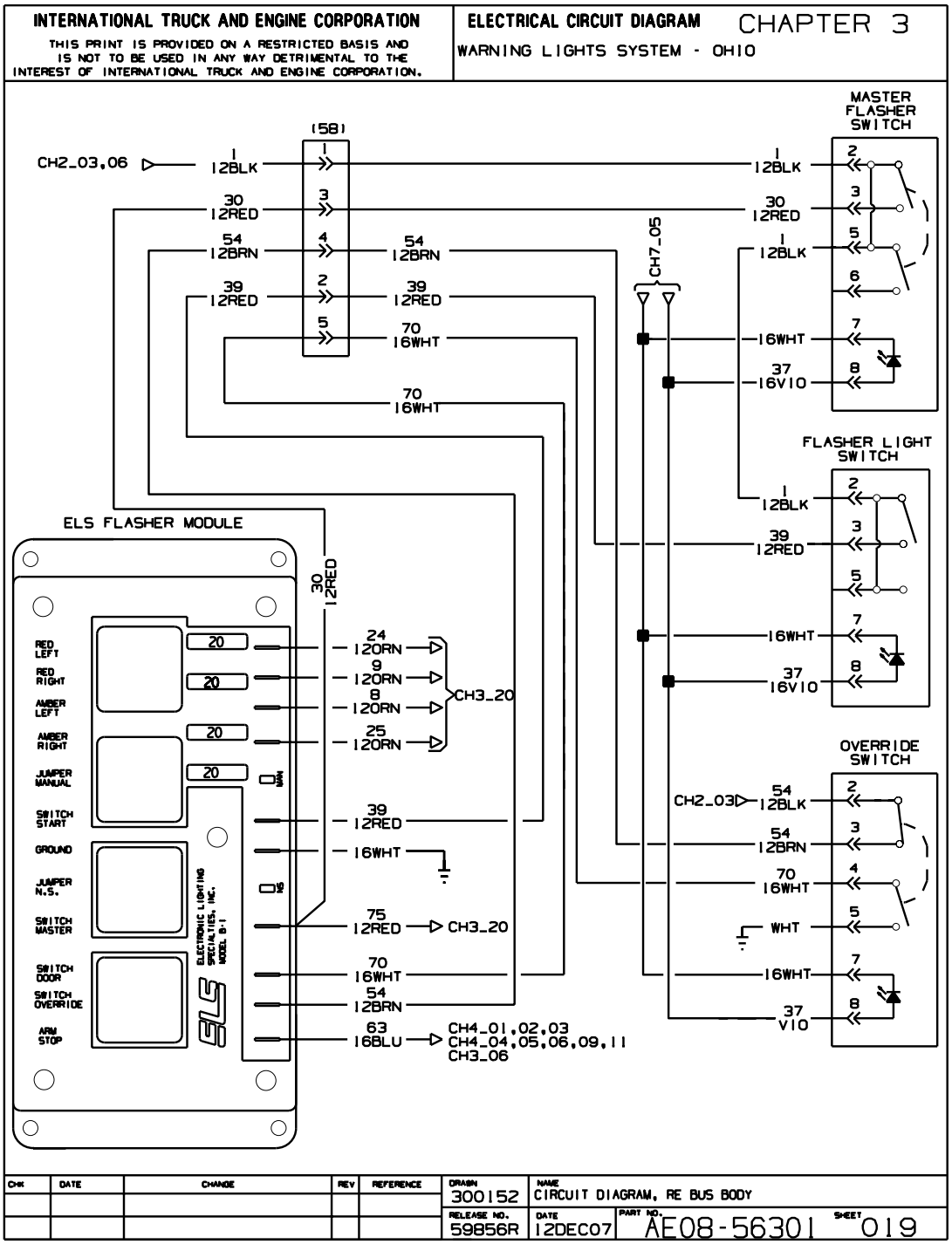

Figure 78 Warning Lights System — Ohio

3.20. WARNING LIGHTS SYSTEM — OHIO, P. 20

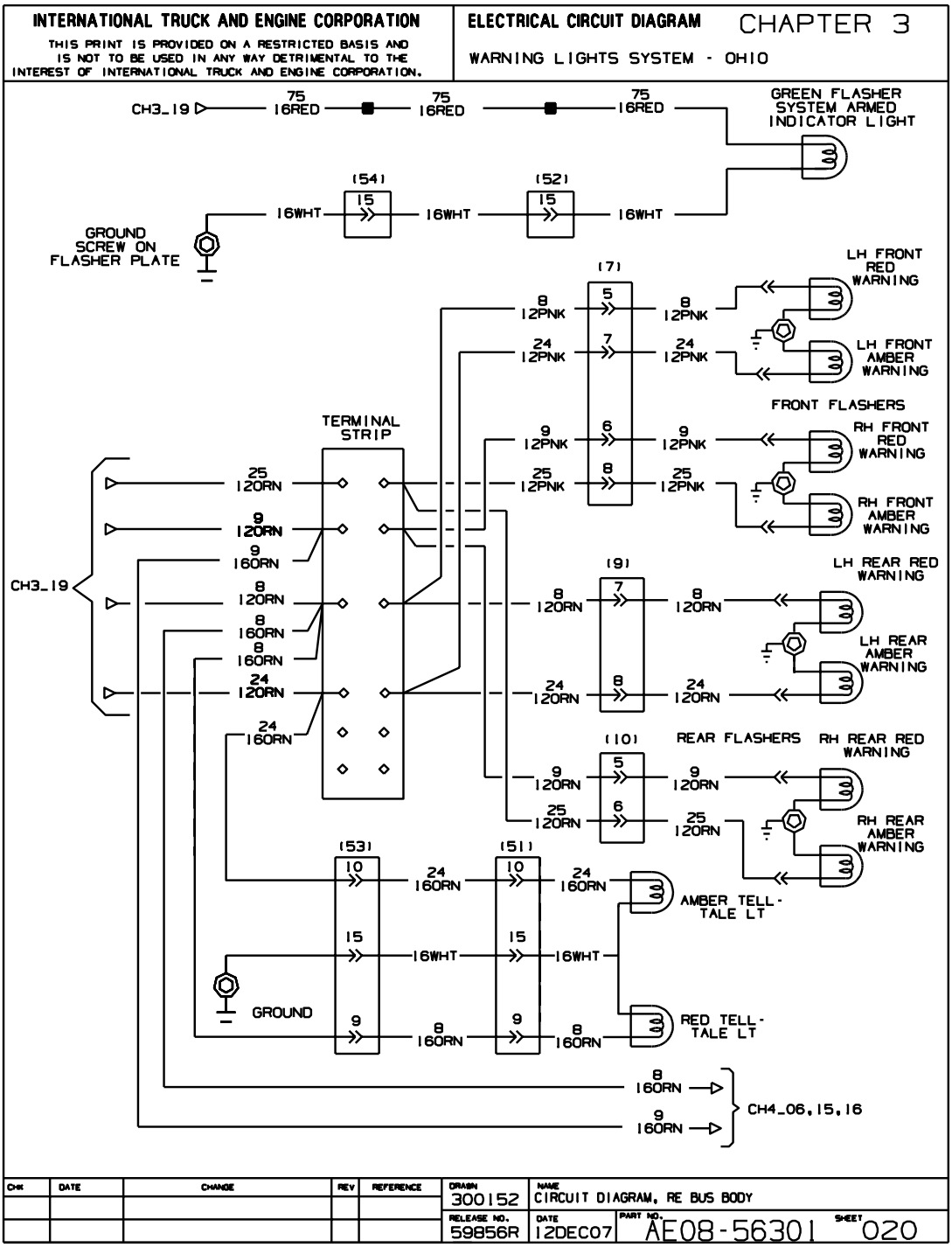

Figure 79 Warning Lights System — Ohio

3.21. ELS FLASHER SYSTEM WITH MASTER FLASHER SWITCH AND FLASHER LIGHT START SWITCH, P. 21

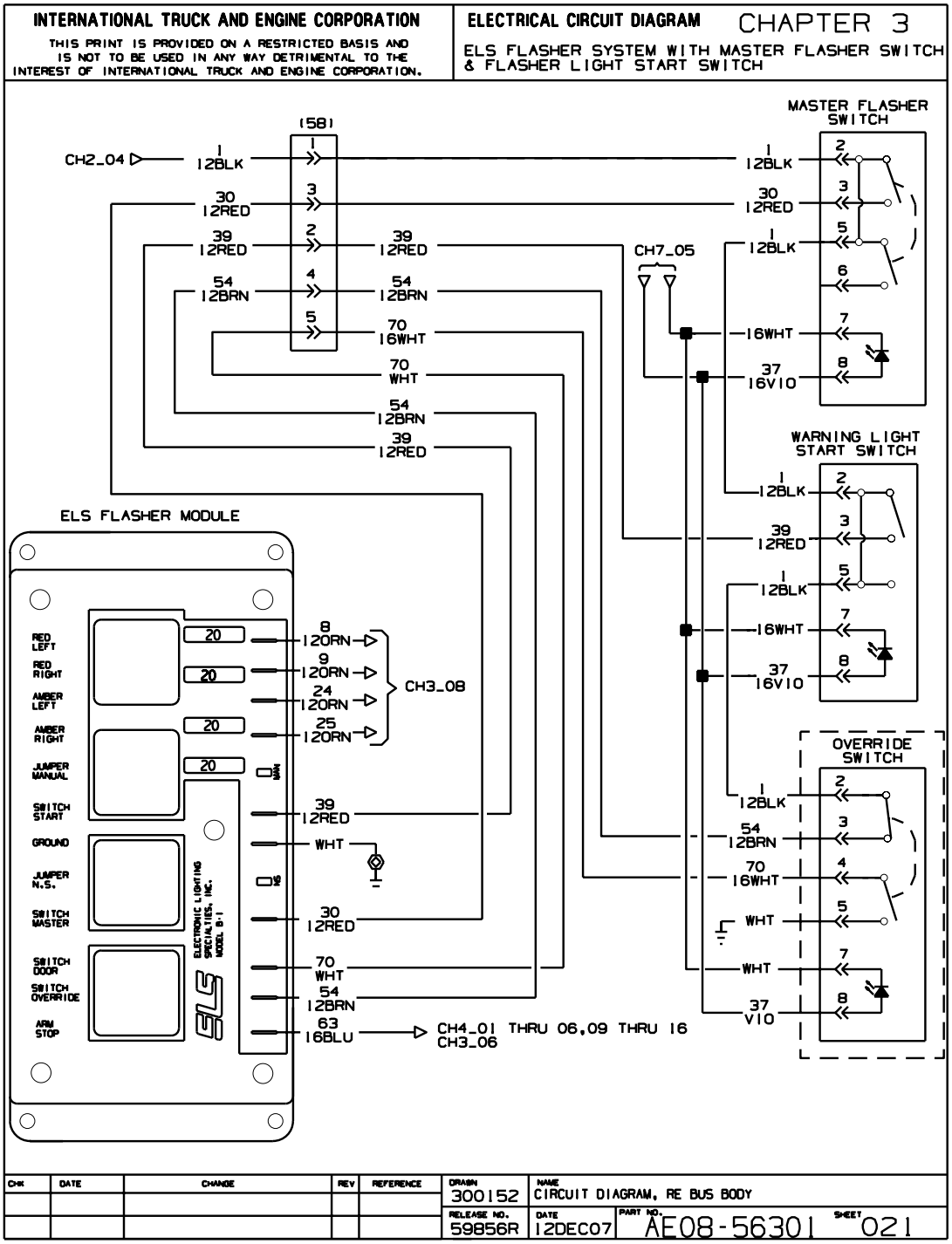

Figure 80 ELS Flasher System with Master Flasher Switch and Flasher Light Start Switch

4. STOP ARM — CROSSING GATE (CHAPTER 4)

4.1. CROSSING GATE ELECTRIC WITH OVERHEAD CANCEL, P. 1

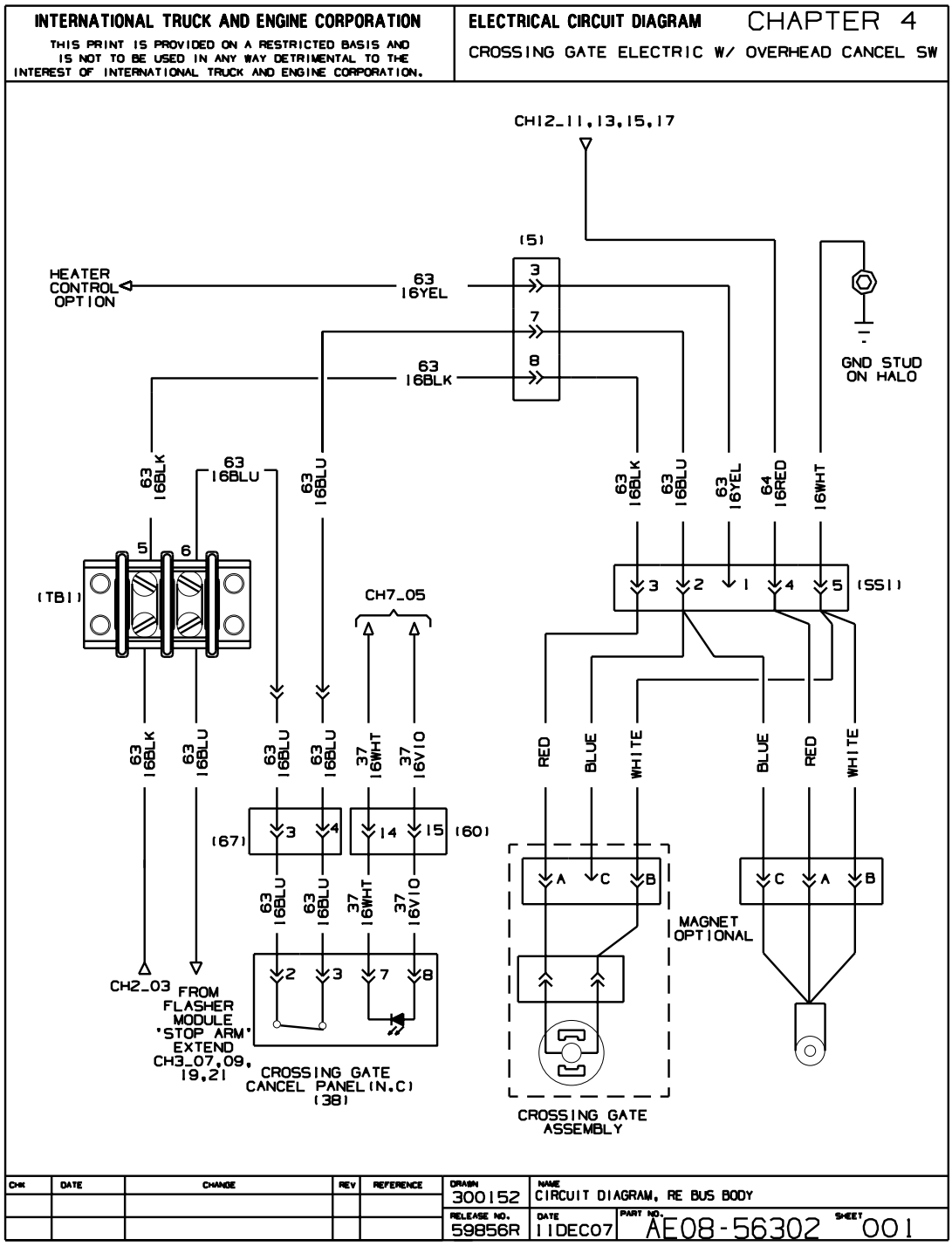

Figure 81 Crossing Gate Electric with Overhead Cancel

4.2. CROSSING GATE ELECTRIC WITH LH CANCEL SW, P. 2

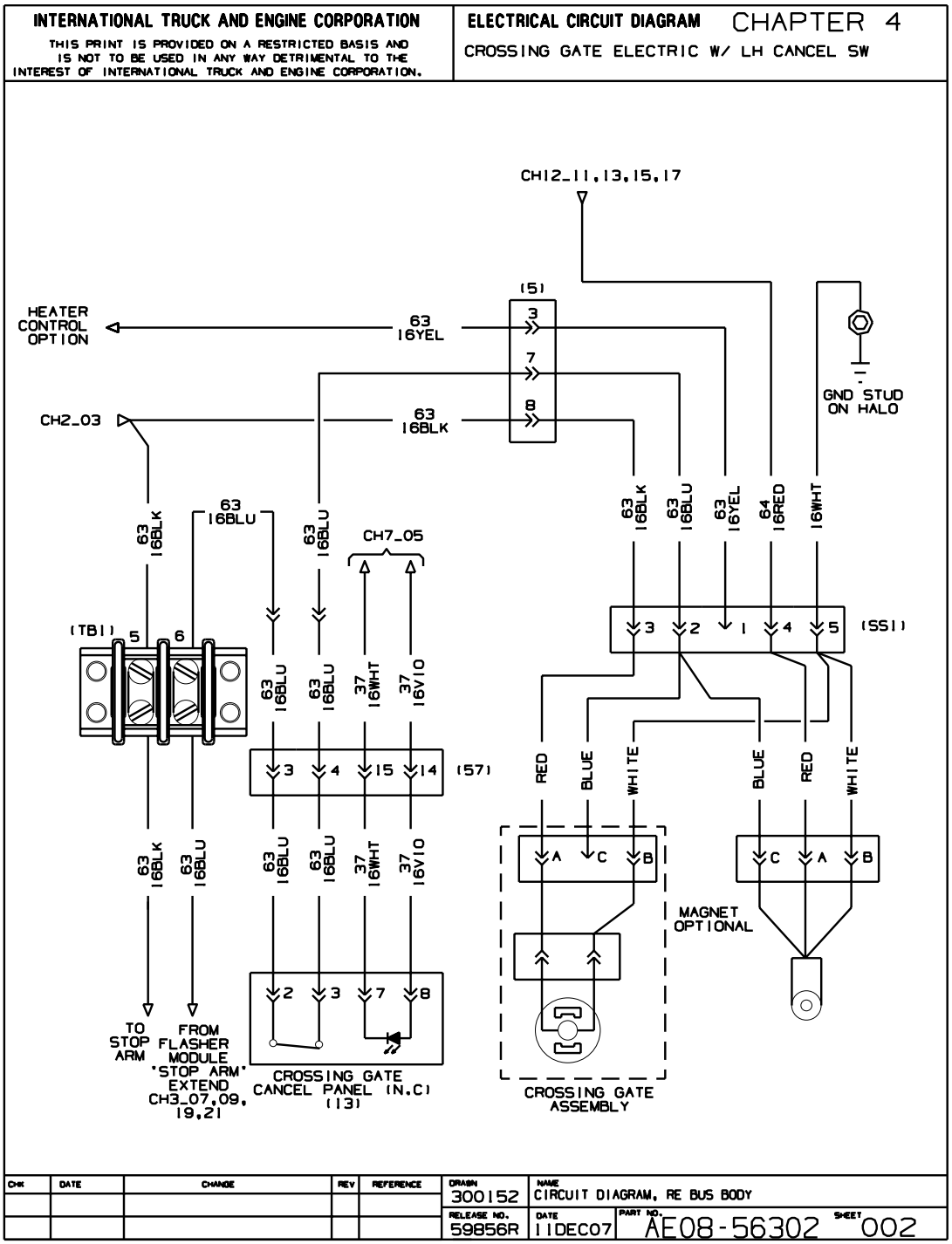

Figure 82 Crossing Gate Electric with LH Cancel Sw

4.3. CROSSING GATE ELECTRIC WITH LH CANCEL SW SINGLE CYCLE, P. 3

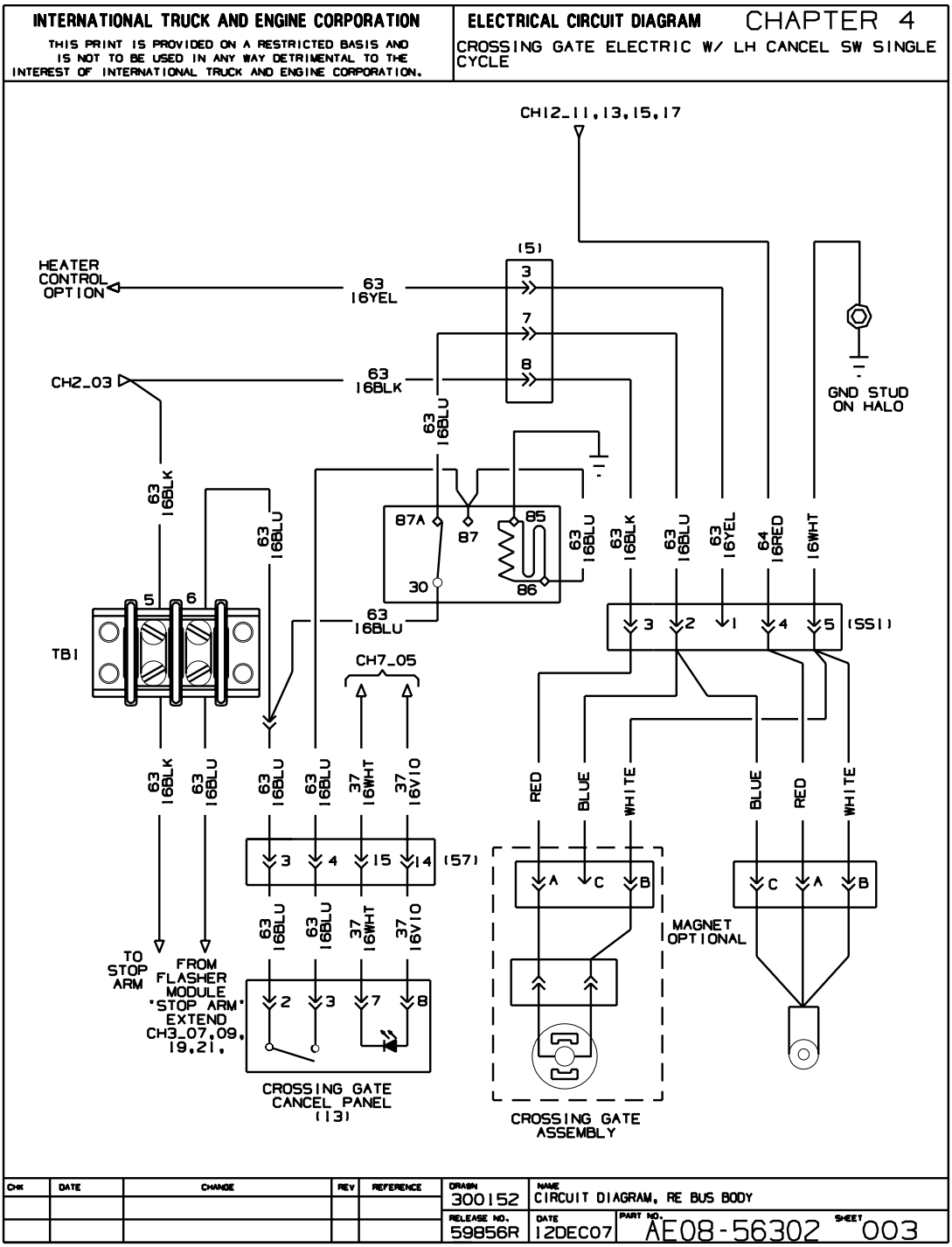

Figure 83 Crossing Gate Electric with LH Cancel Sw Single Cycle

4.4. CROSSING GATE ELECTRIC, P. 4

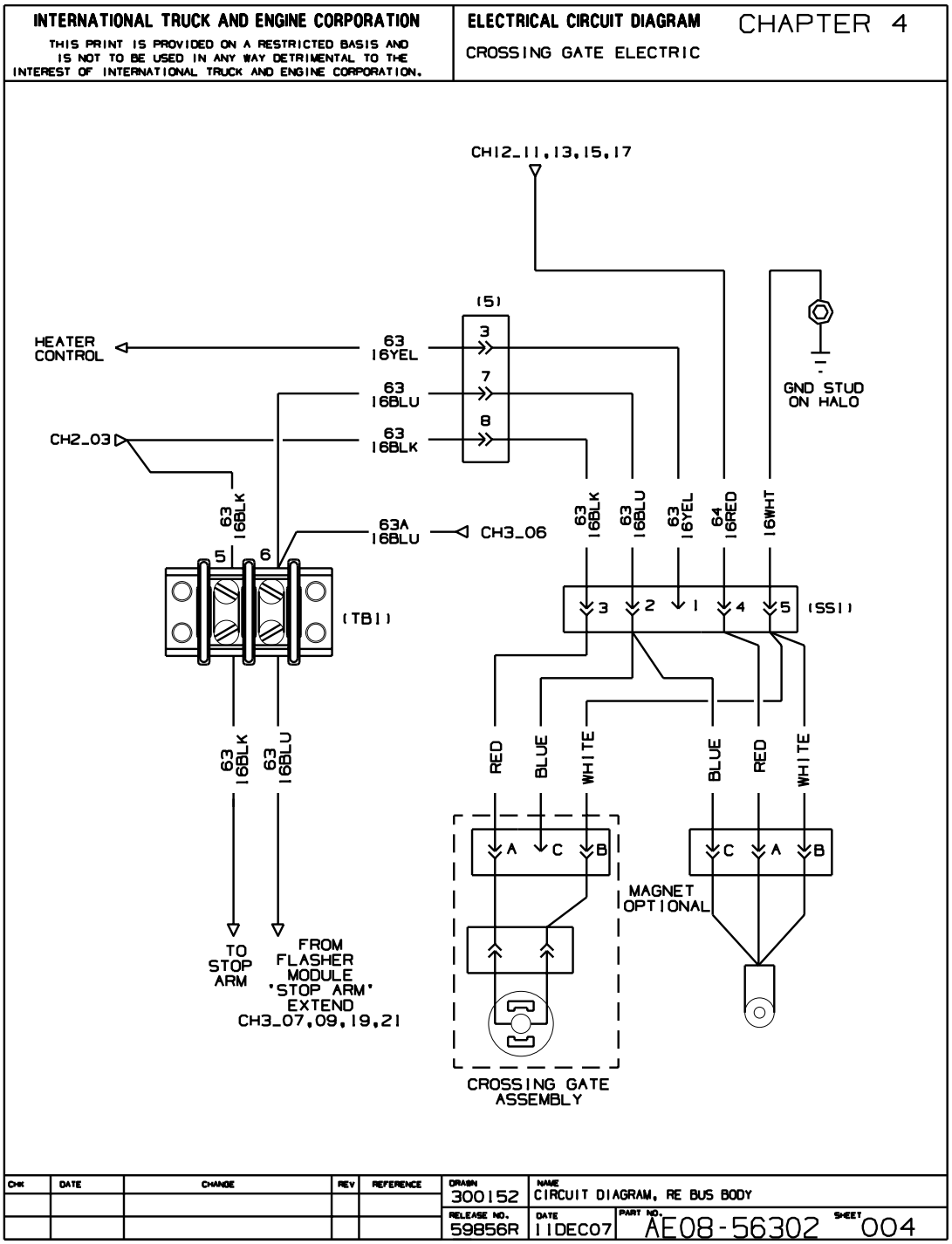

Figure 84 Crossing Gate Electric

4.5. STOP ARM — ELECTRIC (WITH CANCEL SWITCH), P. 5

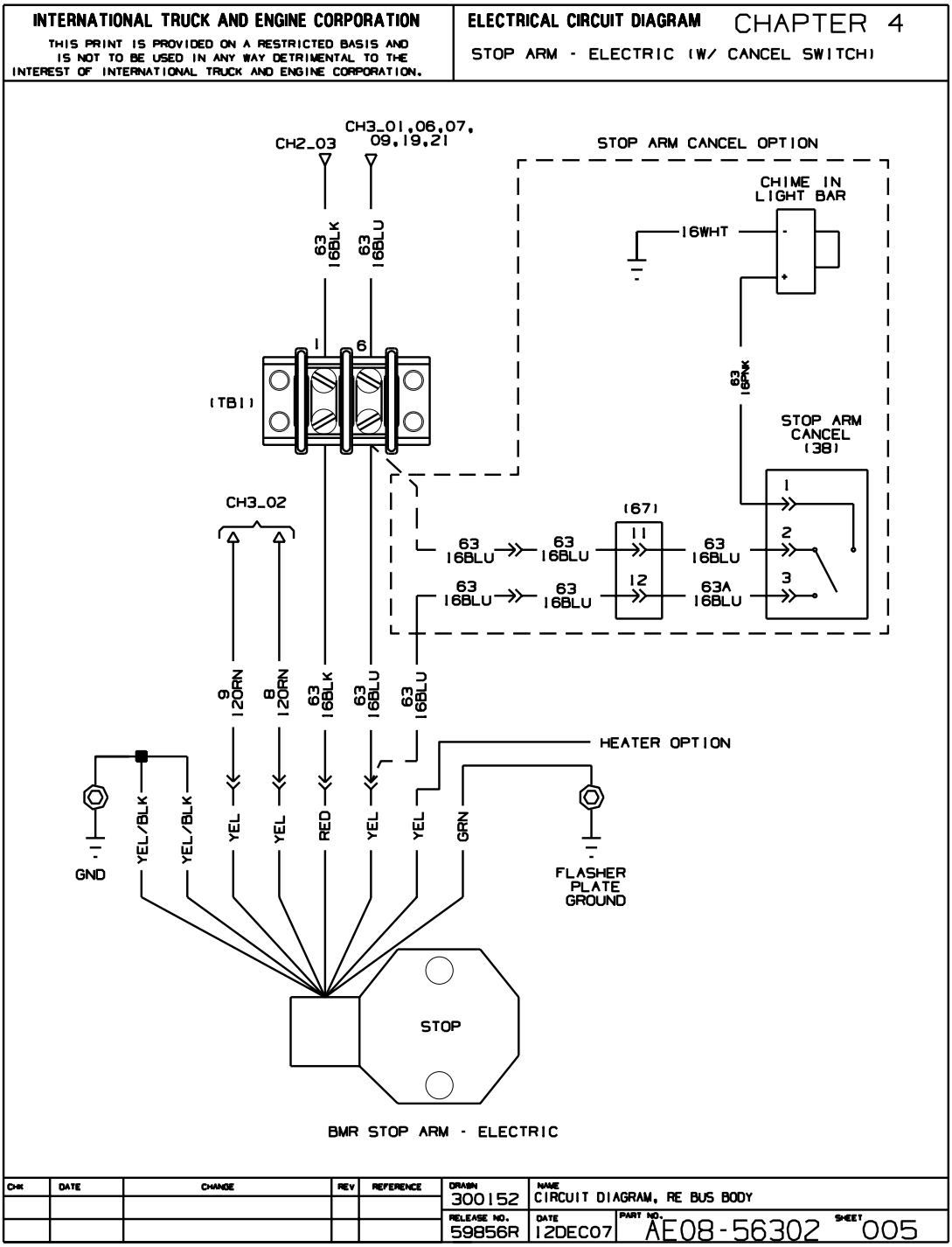

Figure 85 Stop Arm — Electric (with Cancel Switch)

4.6. STOP ARM — AIR (WITH CANCEL SWITCH) INCANDESCENT LIGHTS — FRONT, P. 6

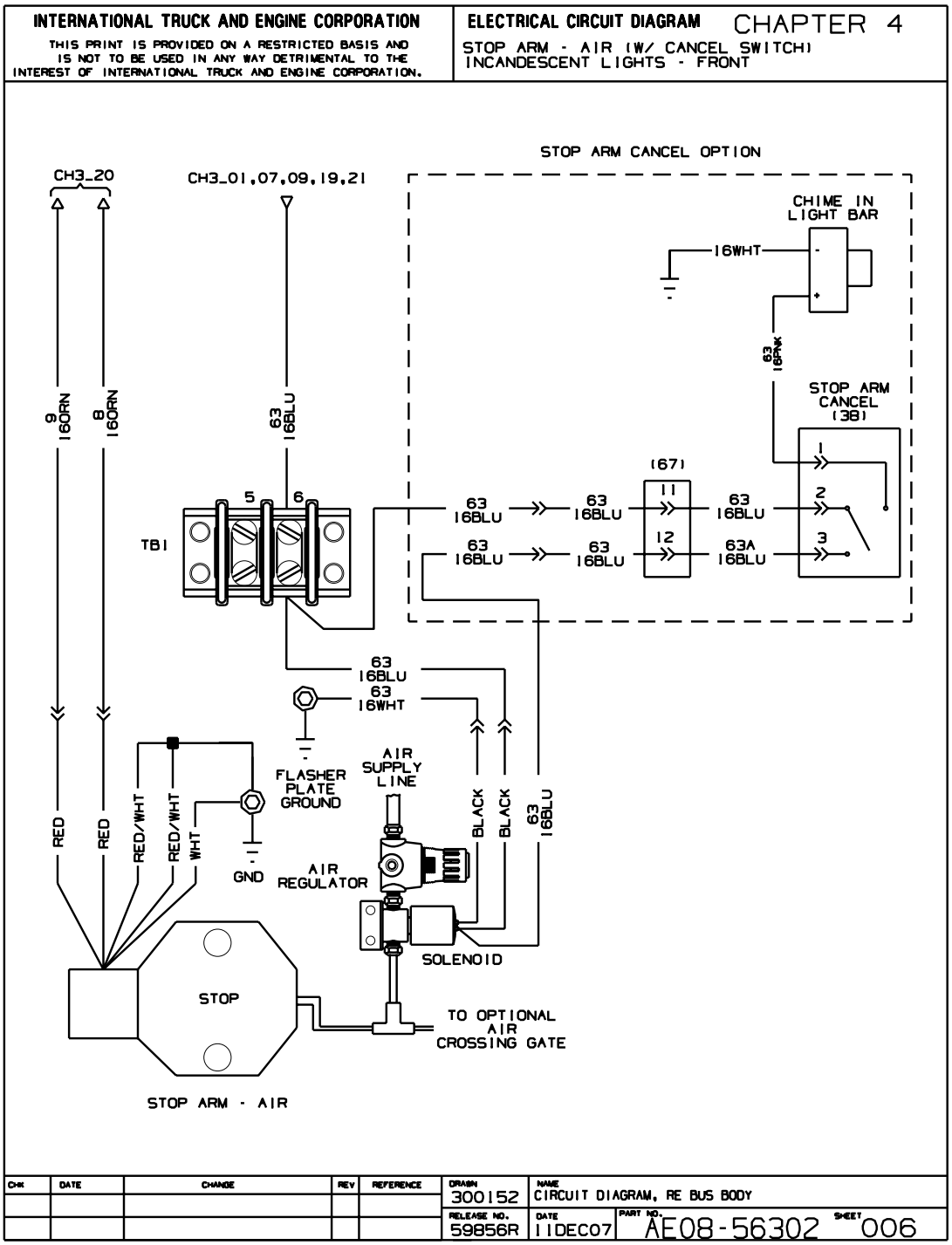

Figure 86 Stop Arm — Air (with Cancel Switch) Incandescent Lights — Front

4.7. AIR CROSSING GATE WITH CROSSING GATE CANCEL SWITCH, P. 7

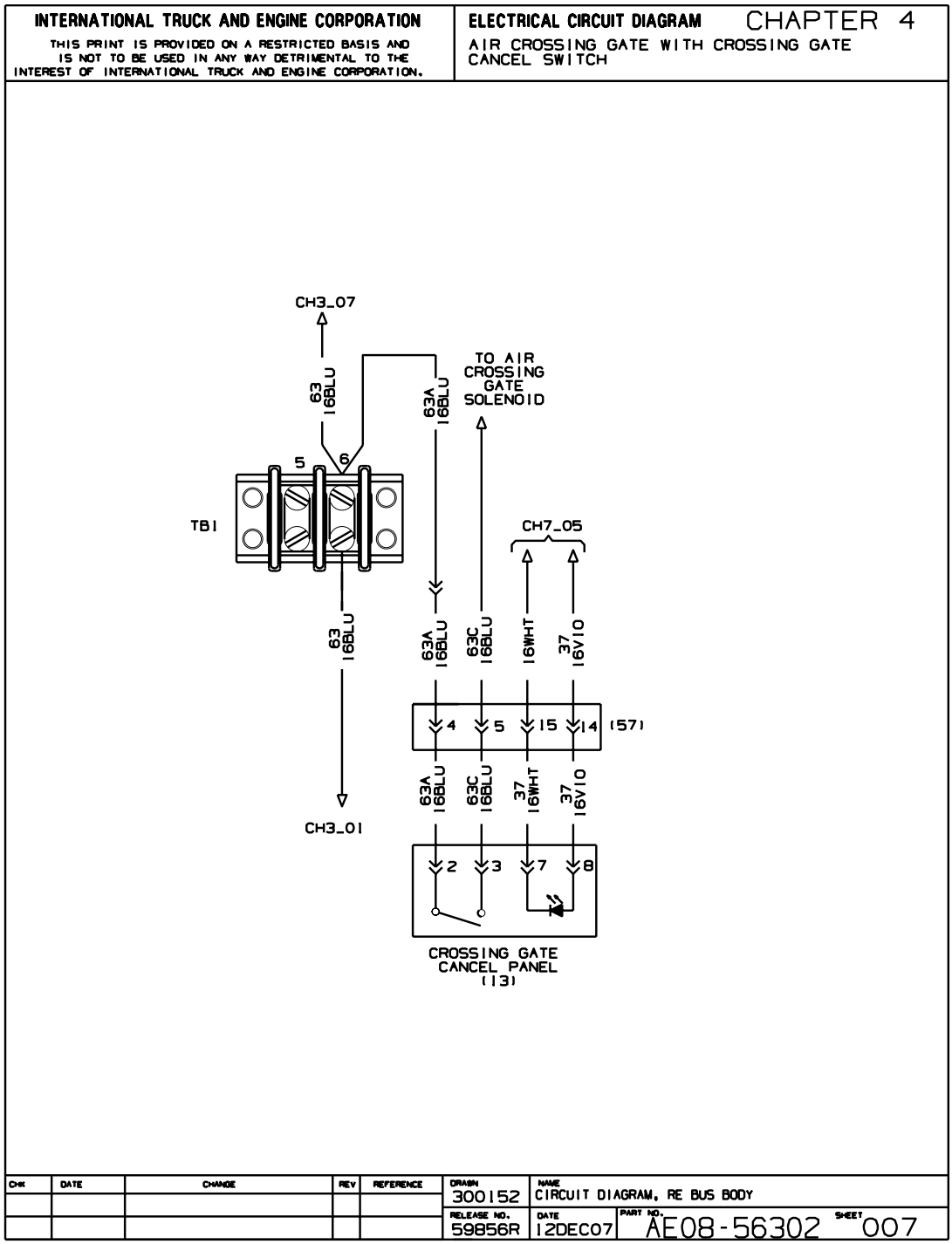

Figure 87 Air Crossing Gate with Crossing Gate Cancel Switch

4.8. AIR CROSSING GATE WITH SINGLE CYCLE CROSSING GATE CANCEL SWITCH, P. 8

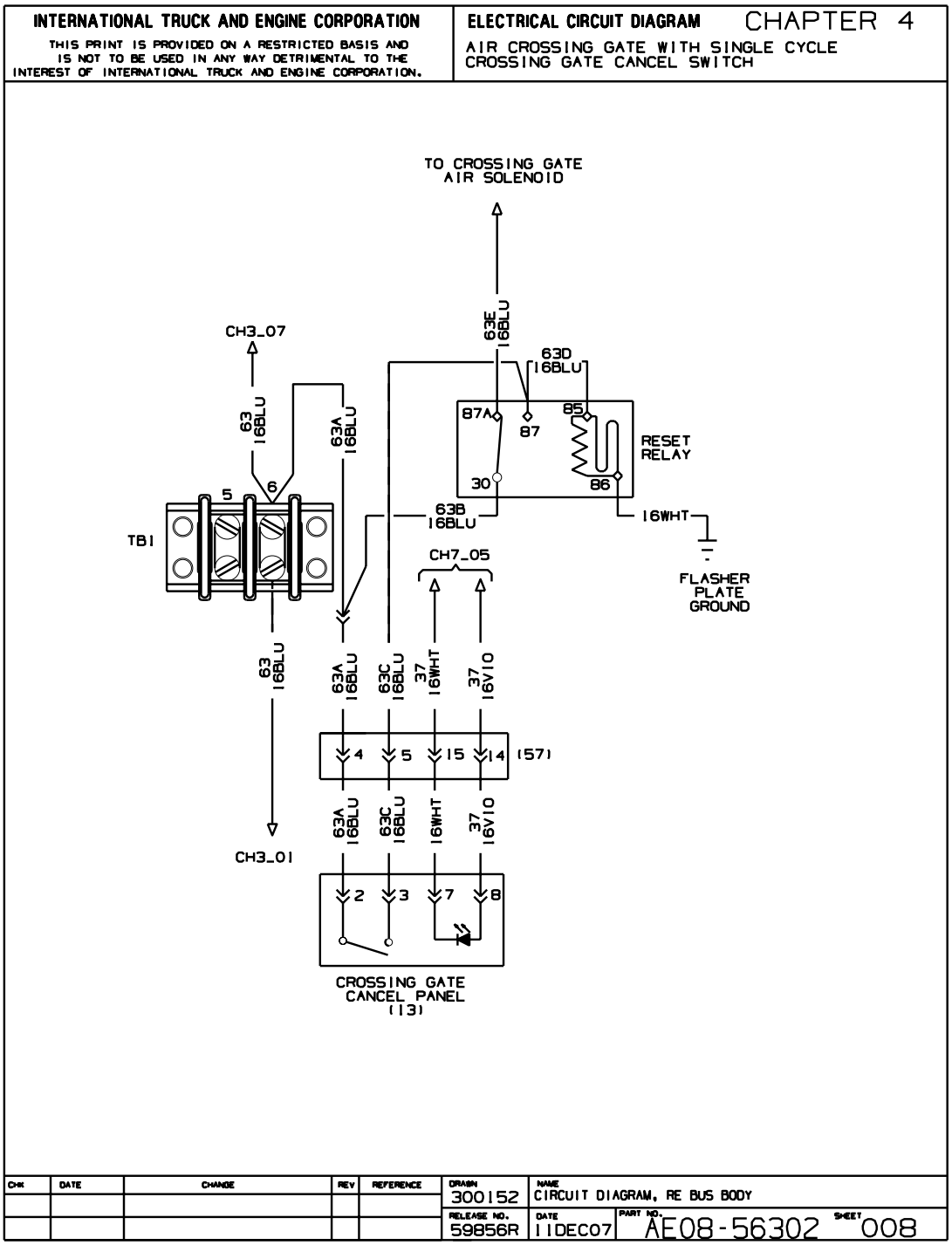

Figure 88 Air Crossing Gate with Single Cycle Crossing Gate Cancel Switch

4.9. ELECTRIC FRONT STOP ARM — SPECIALTY, P. 9

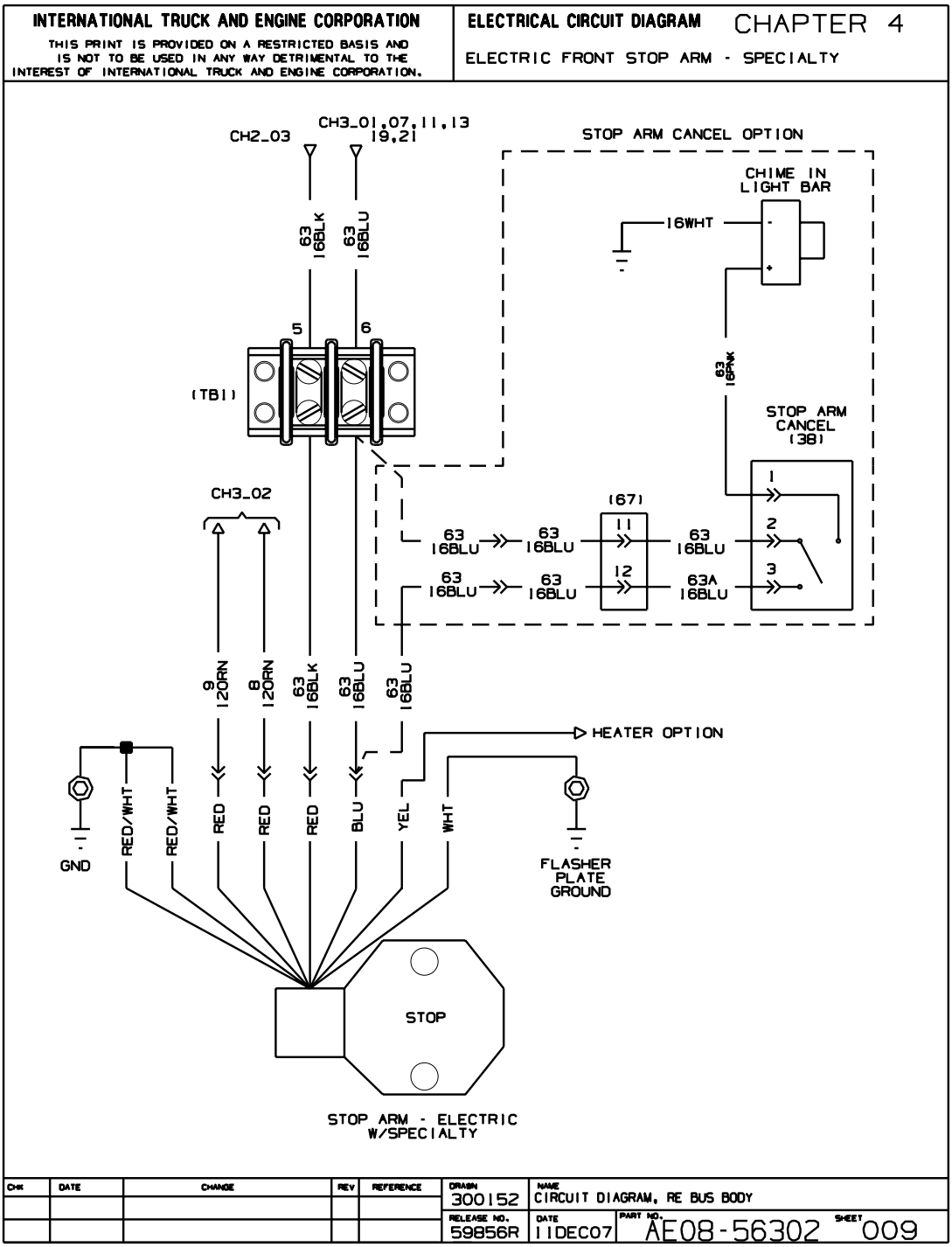

Figure 89 Electric Front Stop Arm — Specialty

4.10. ELECTRIC FRONT STOP ARM — TRANSPEC, P. 10

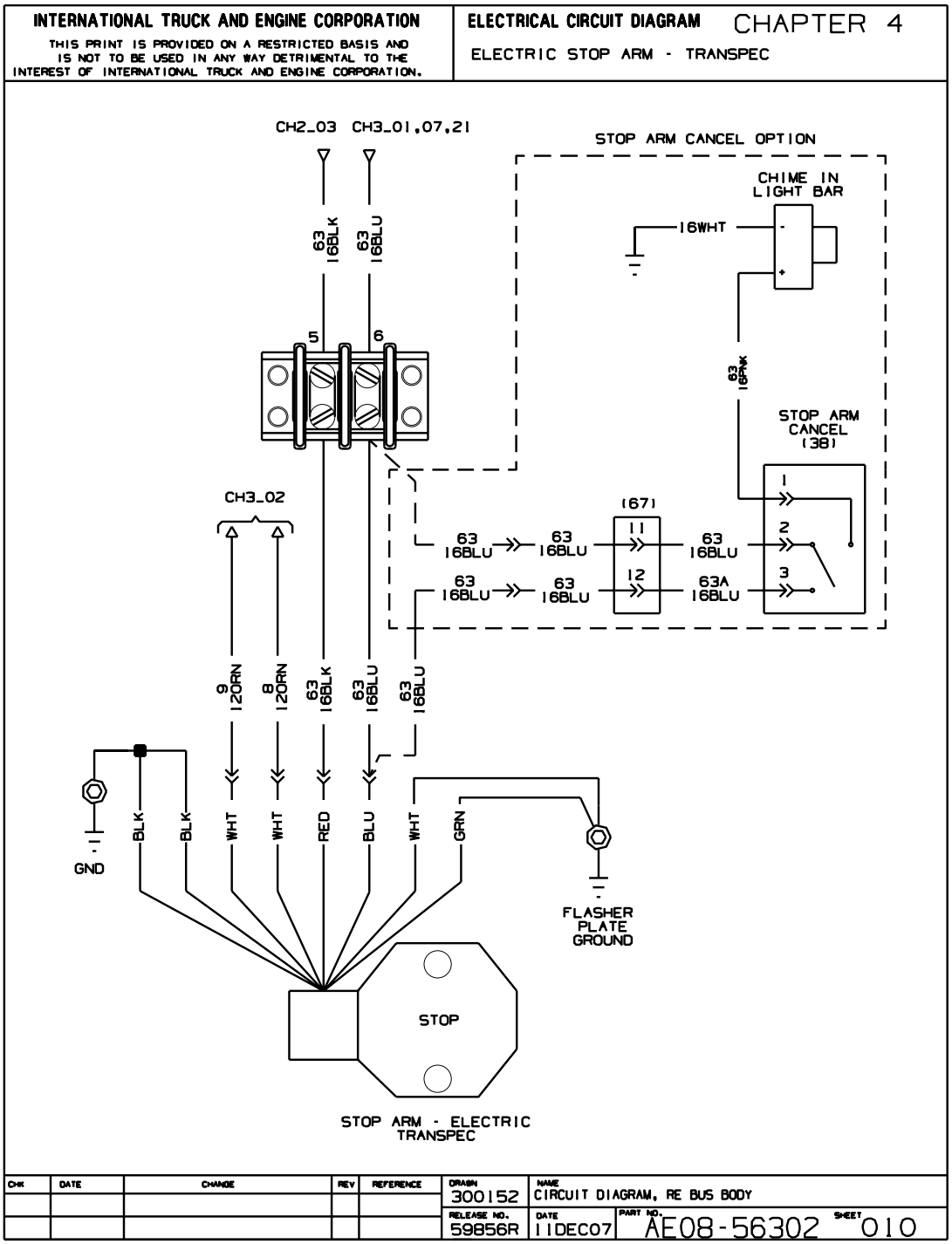

Figure 90 Electric Front Stop Arm — Transpec

4.11. STOP ARM WITH STROBE LIGHT — AIR FRONT, P. 11

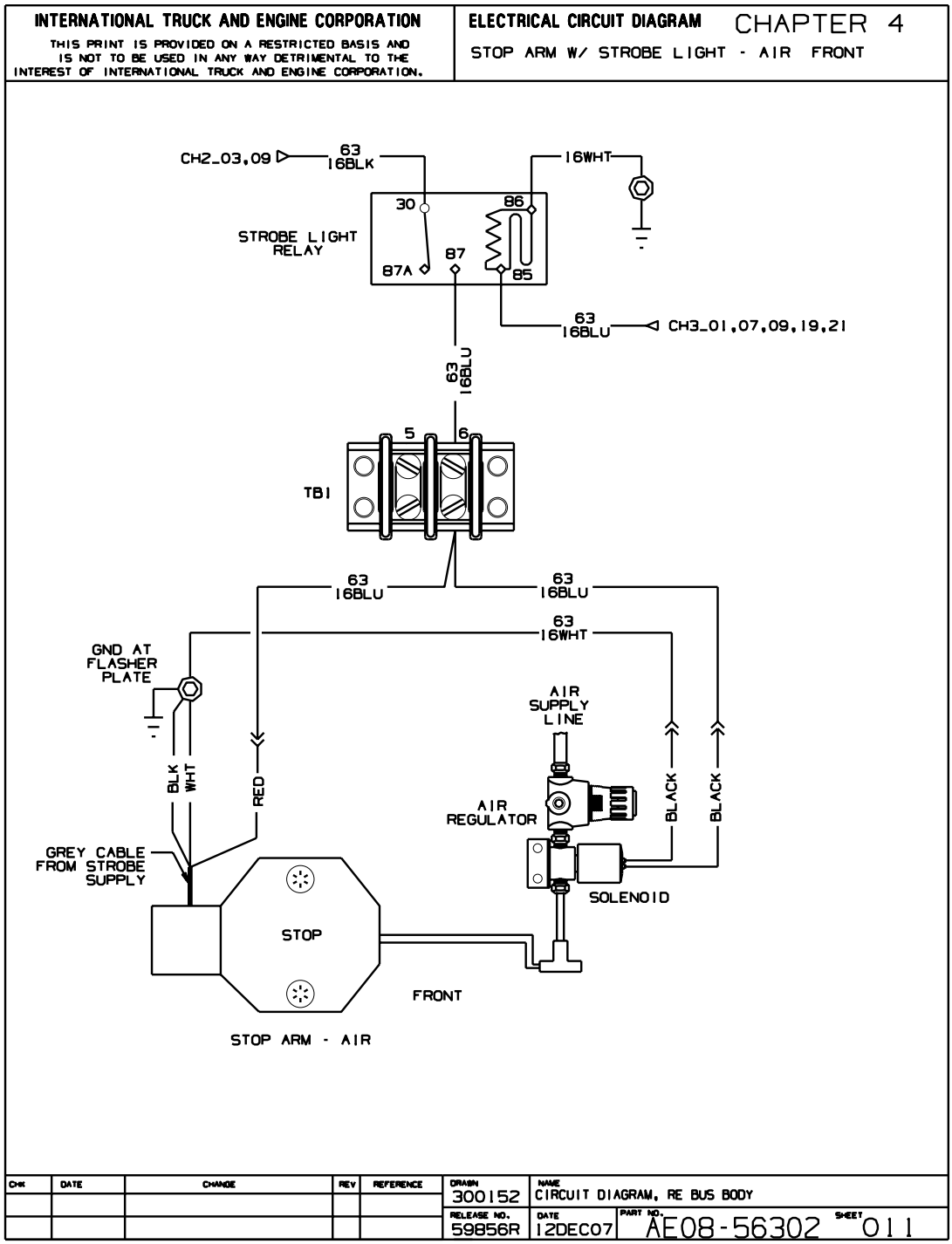

Figure 91 Stop Arm with Strobe Light — Air Front

4.12. STOP ARM WITH STROBE LIGHT — ELECTRIC FRONT, P. 12

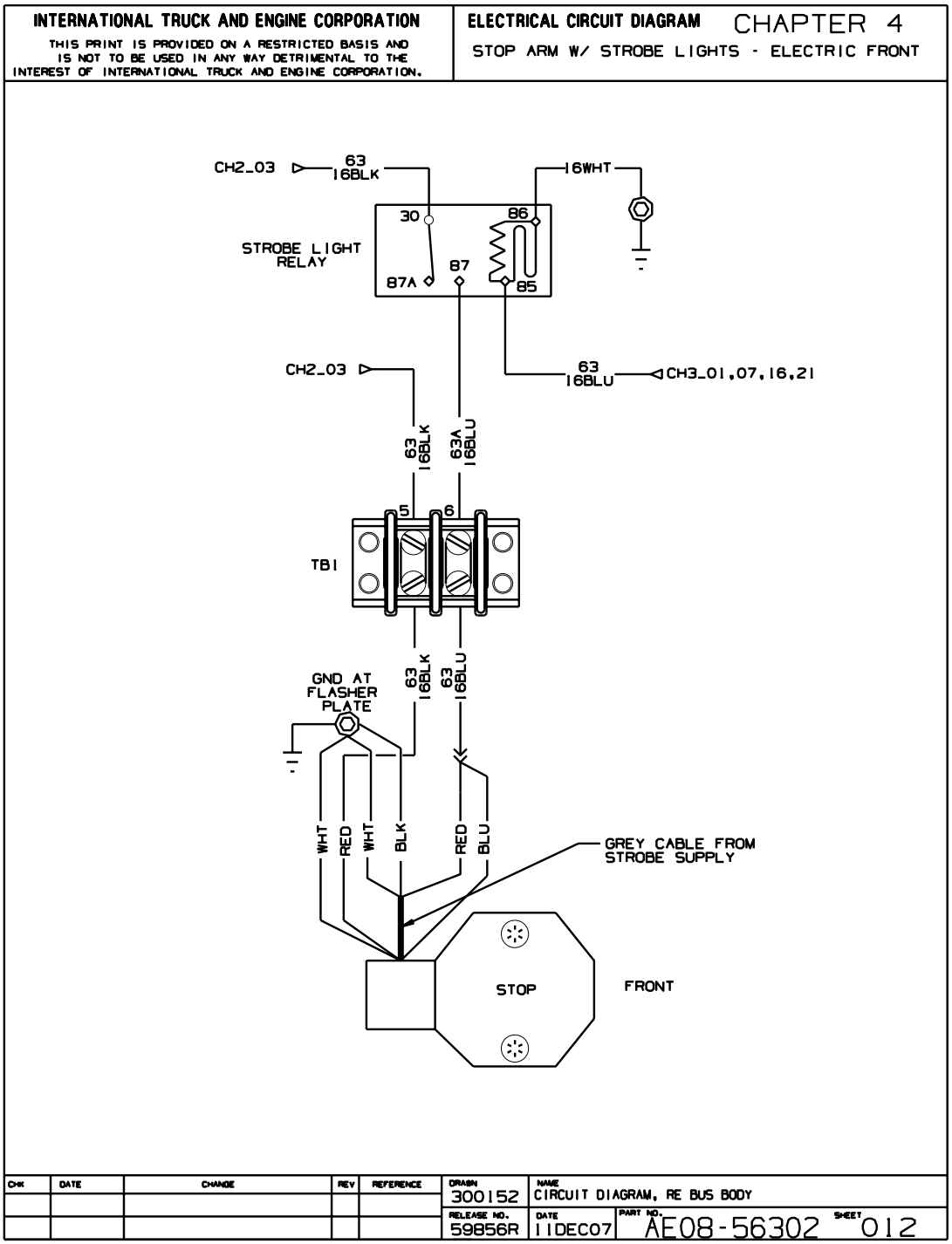

Figure 92 Stop Arm with Strobe Light — Electric Front

4.13. STOP ARM WITH STROBE LIGHT — AIR REAR, P. 13

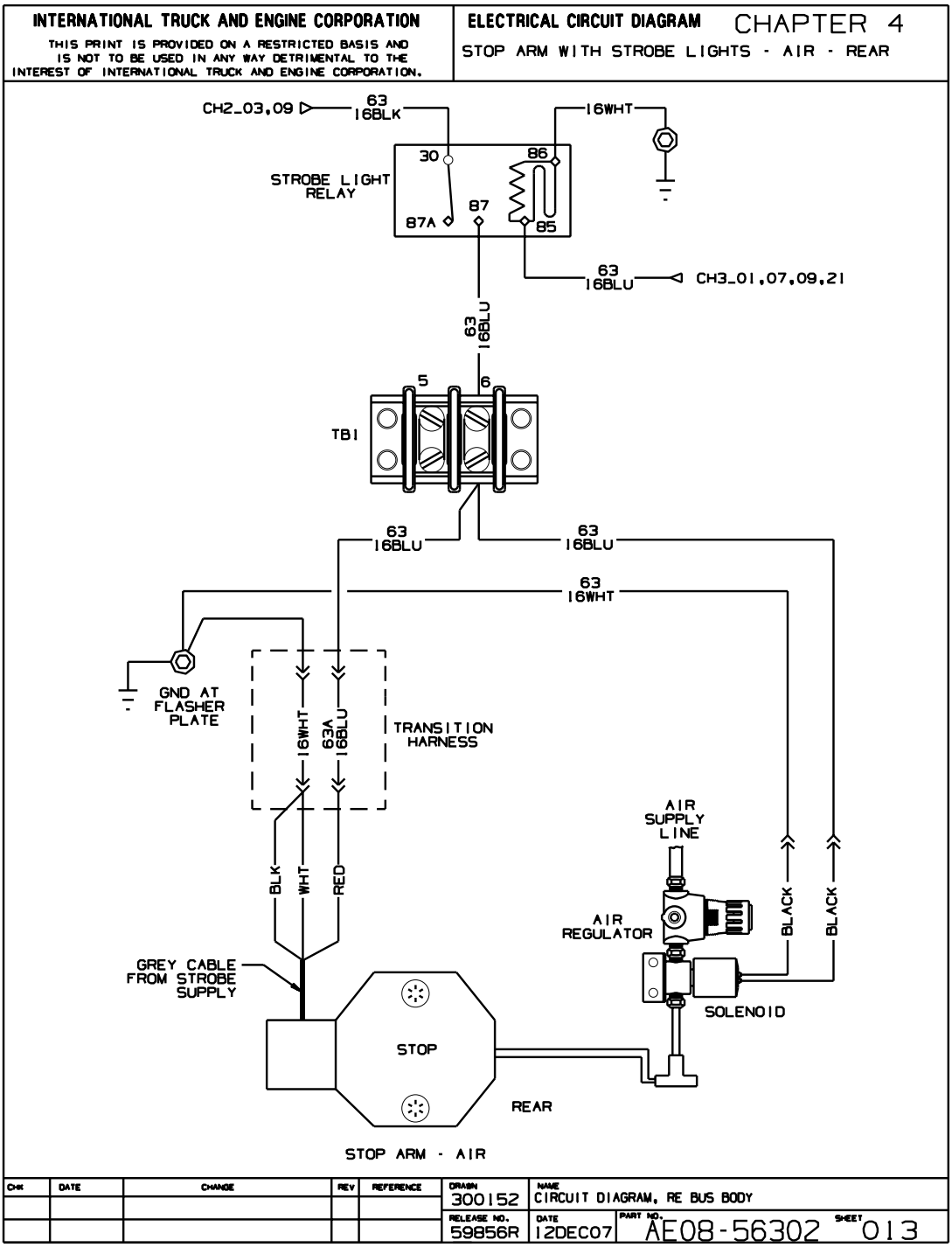

Figure 93 Stop Arm with Strobe Light — Air Rear

4.14. STOP ARM WITH STROBE LIGHT — ELECTRIC REAR, P. 14

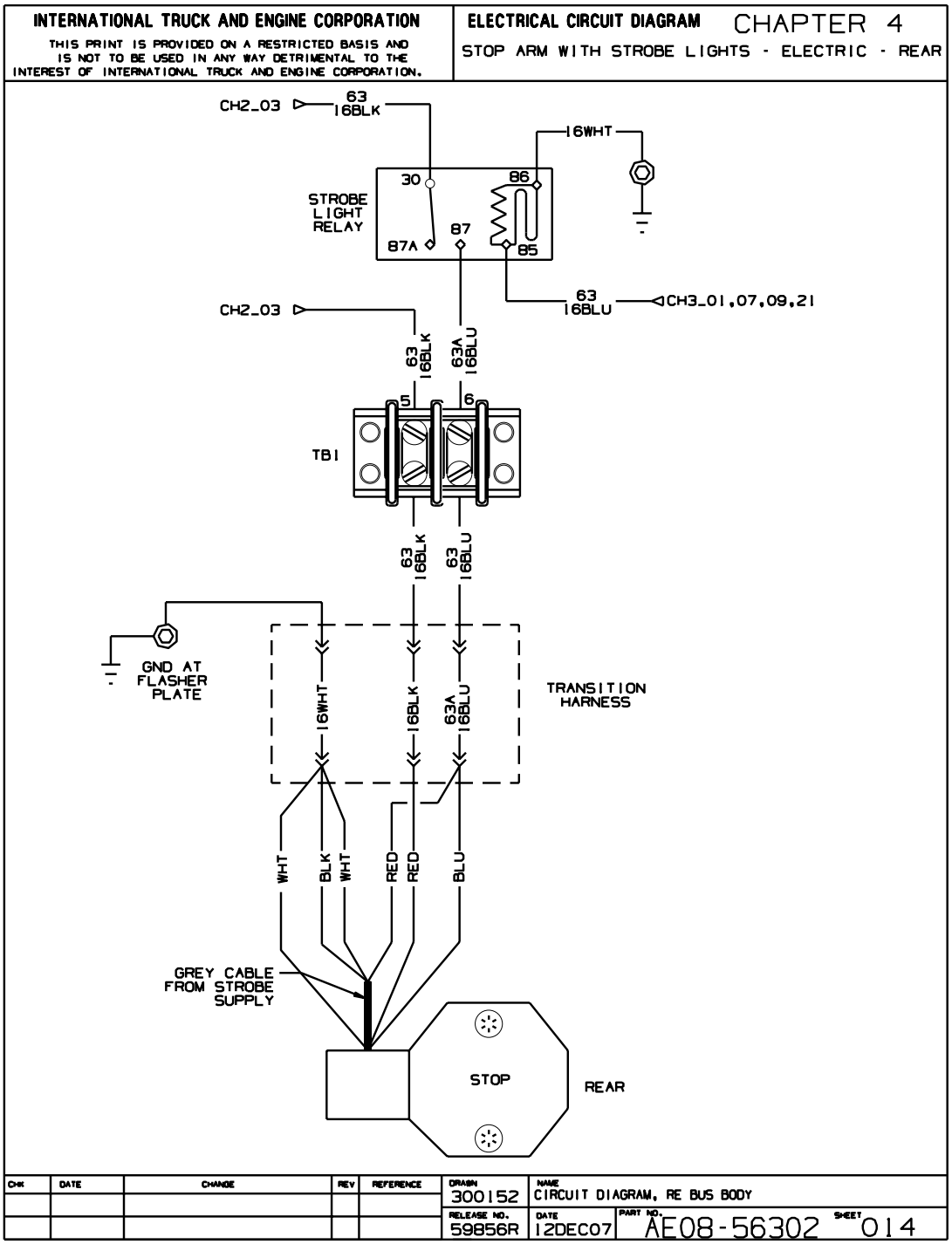

Figure 94 Stop Arm with Strobe Light — Electric Rear

4.15. STOP ARM WITH INCANDESCENT LIGHT — AIR REAR, P. 15

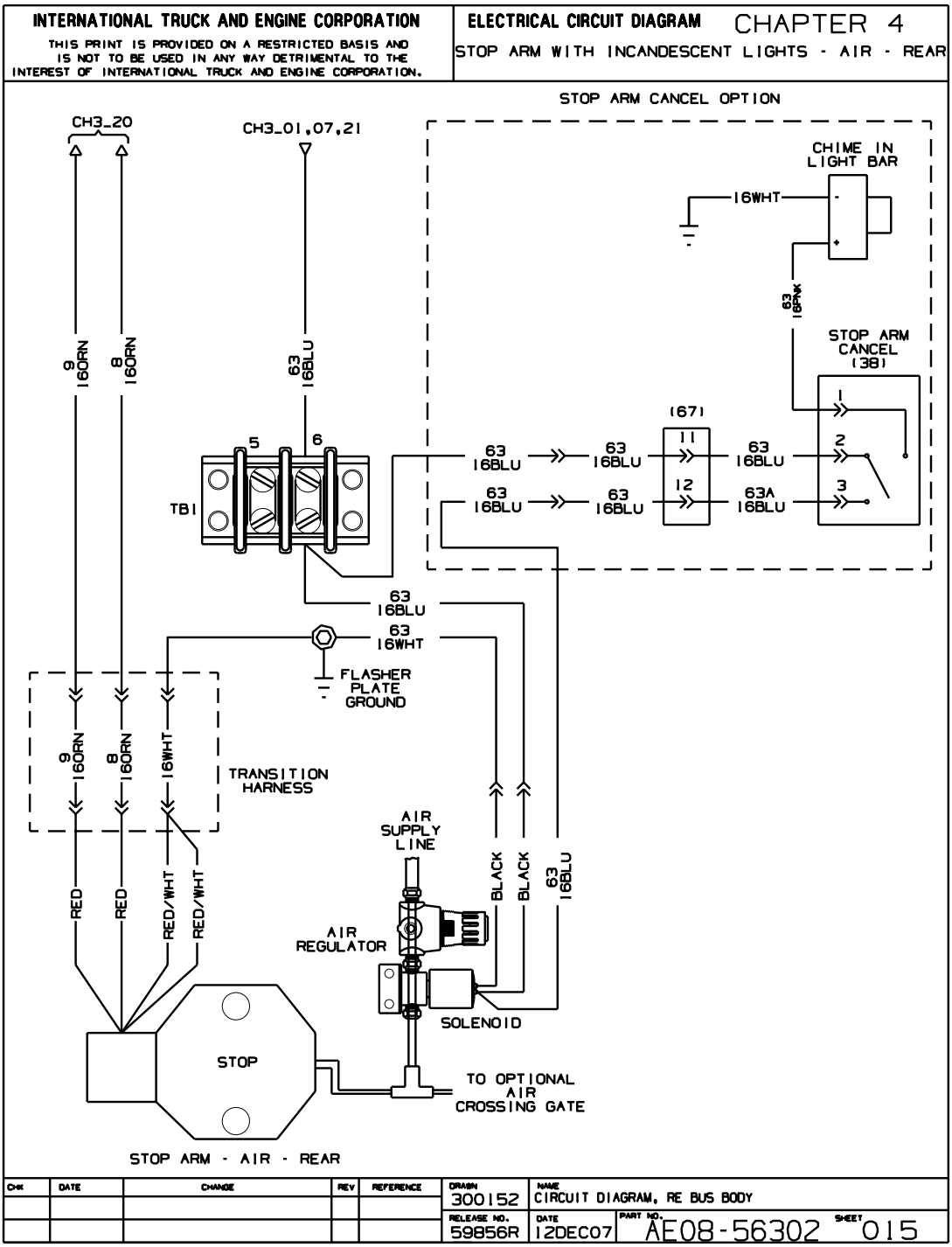

Figure 95 Stop Arm with Incandescent Light — Air Rear

4.16. STOP ARM WITH INCANDESCENT LIGHT — AIR REAR, P. 16

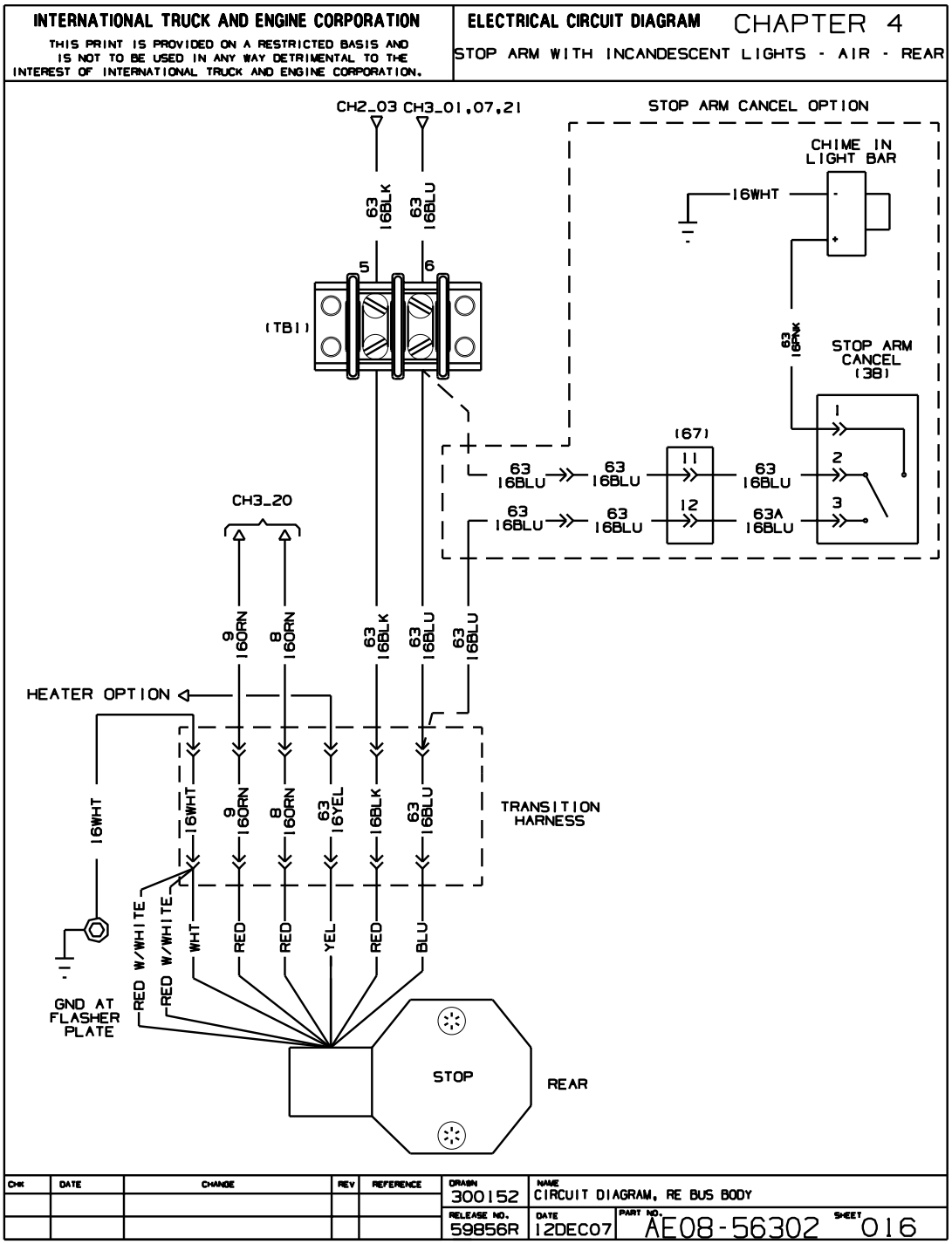

Figure 96 Stop Arm with Incandescent Light — Air Rear

5. ENTRANCE DOOR CONTROL (CHAPTER 5)

5.1. ELECTRIC DOOR — 2 POSITION DOOR CONTROL WITH VANDAL LOCK, P. 1

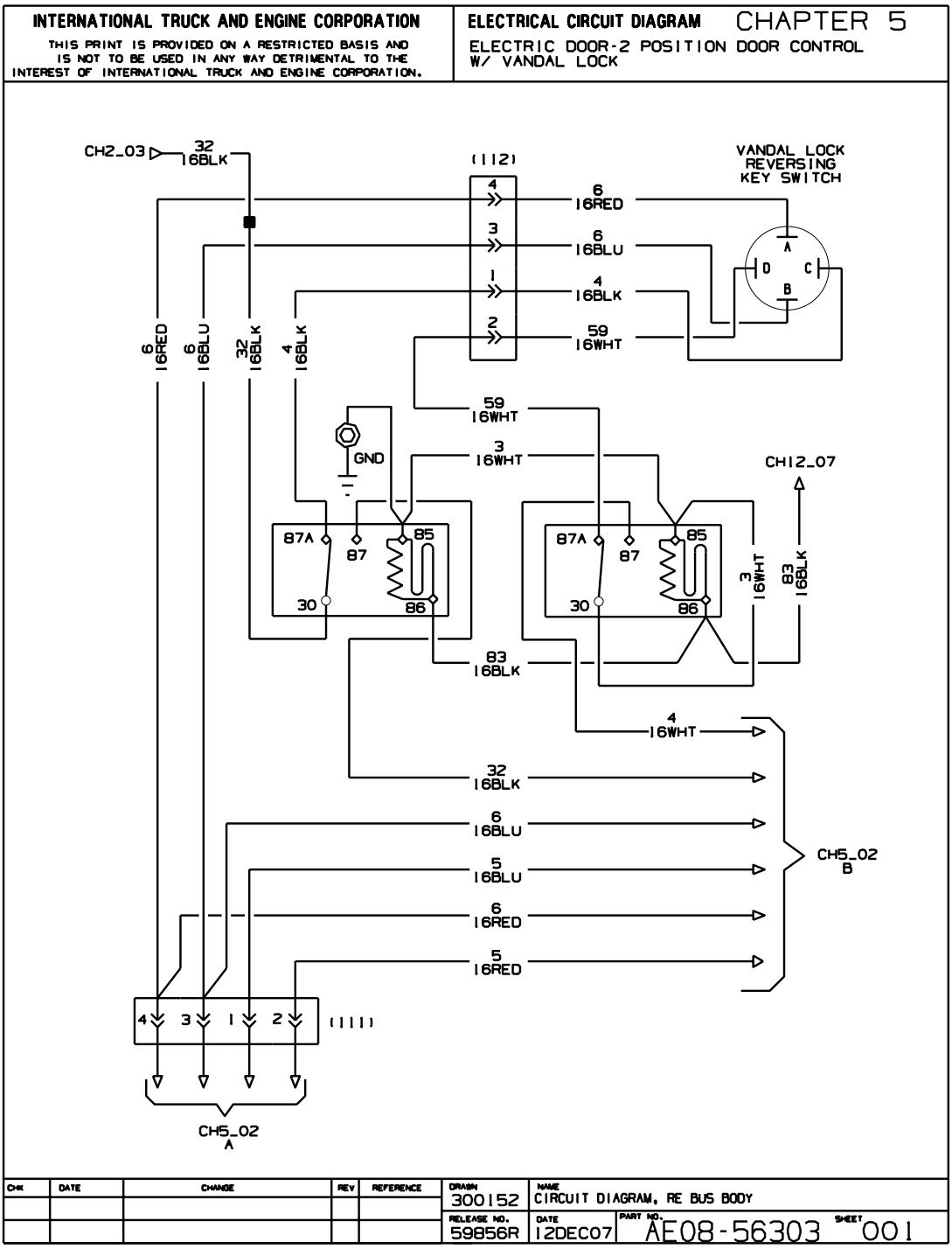

Figure 97 Electric Door — 2 Position Door Control with Vandal Lock

5.2. ELECTRIC DOOR — 2 POSITION DOOR CONTROL WITH VANDAL LOCK, P. 2

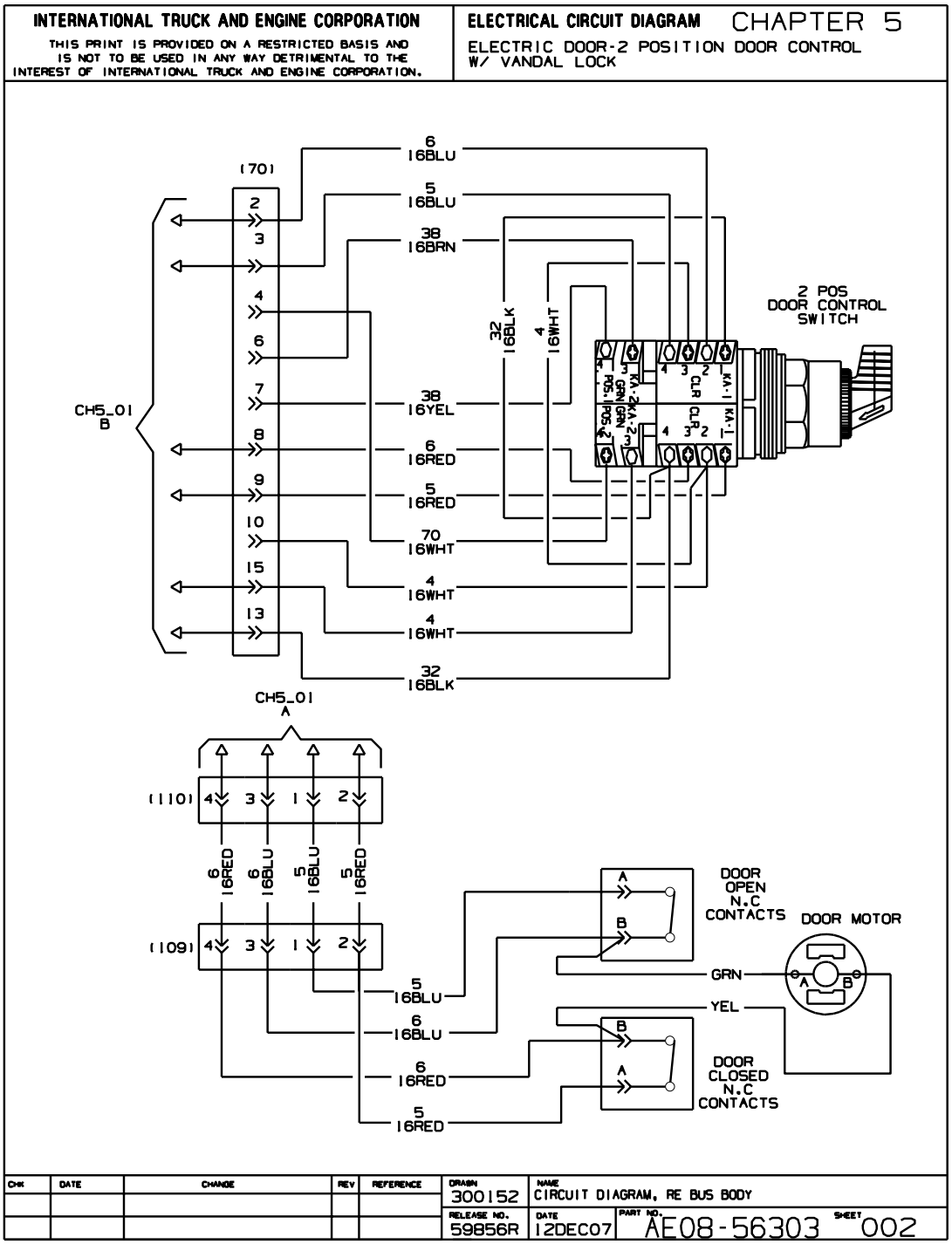

Figure 98 Electric Door — 2 Position Door Control with Vandal Lock

5.3. ELECTRIC DOOR — 3 POSITION DOOR CONTROL WITH VANDAL LOCK, P. 3

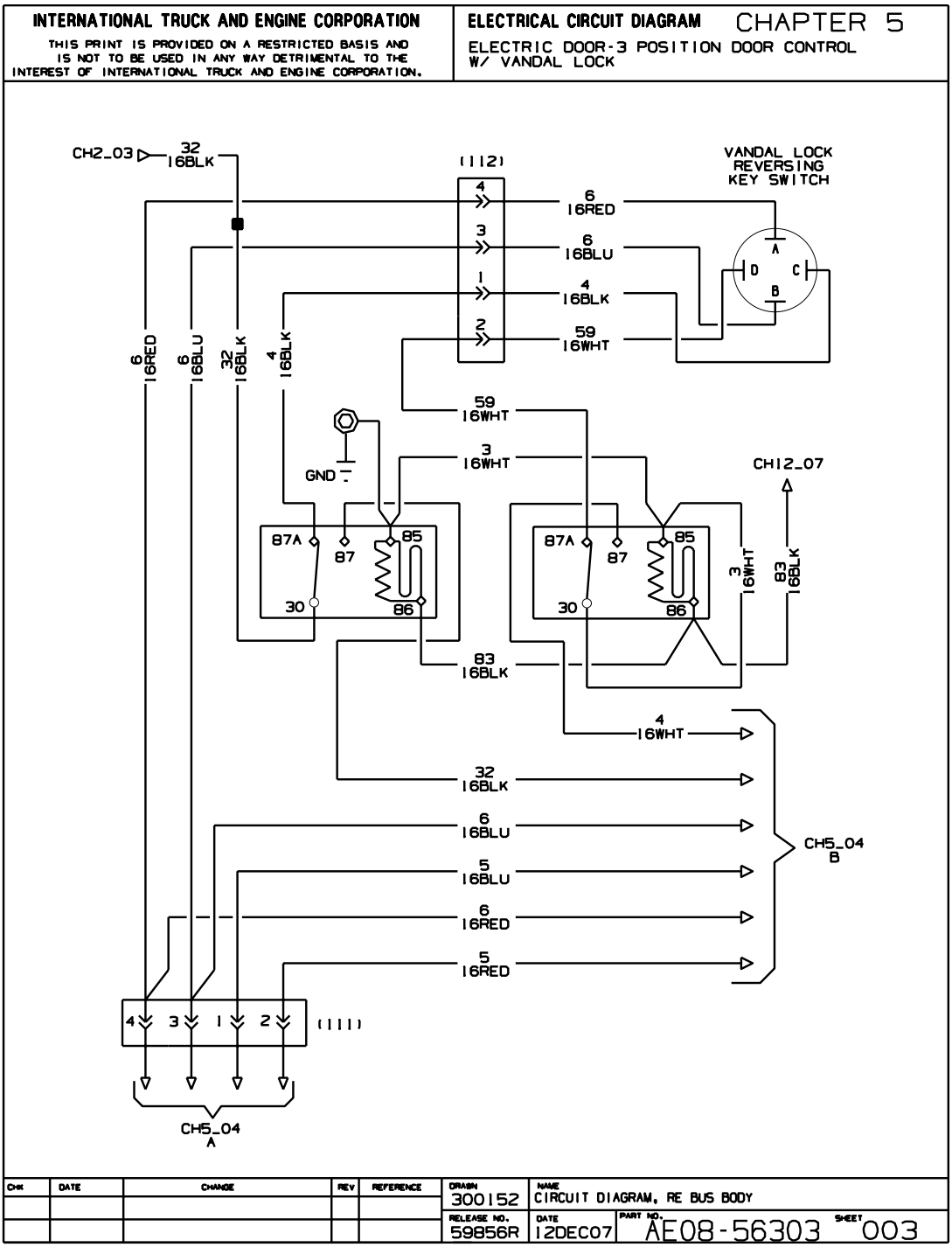

Figure 99 Electric Door — 3 Position Door Control with Vandal Lock

5.4. ELECTRIC DOOR — 3 POSITION DOOR CONTROL WITH VANDAL LOCK, P. 4

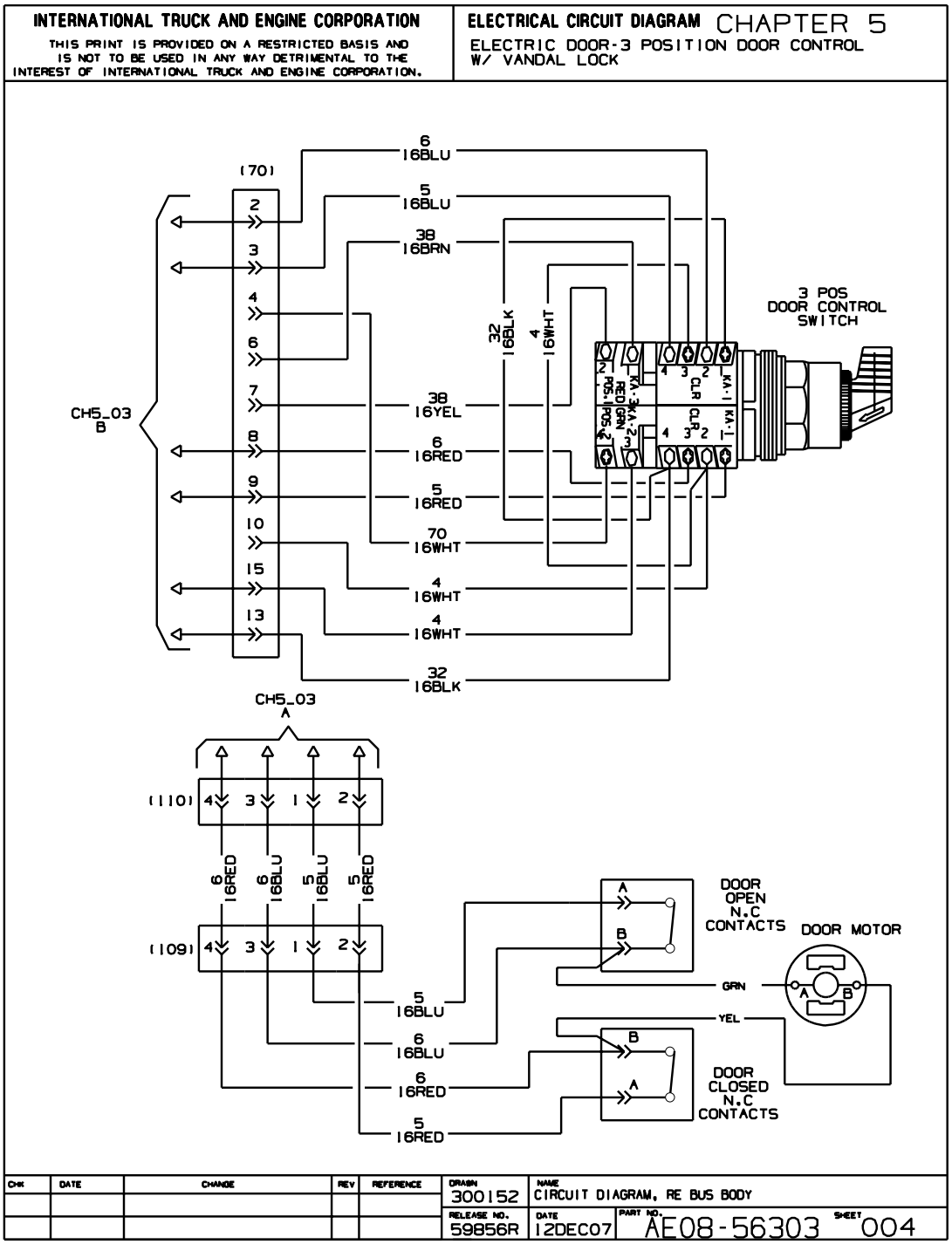

Figure 100 Electric Door — 3 Position Door Control with Vandal Lock

5.5. VANDAL LOCK FOR AIR ENTRANCE DOOR, P. 5

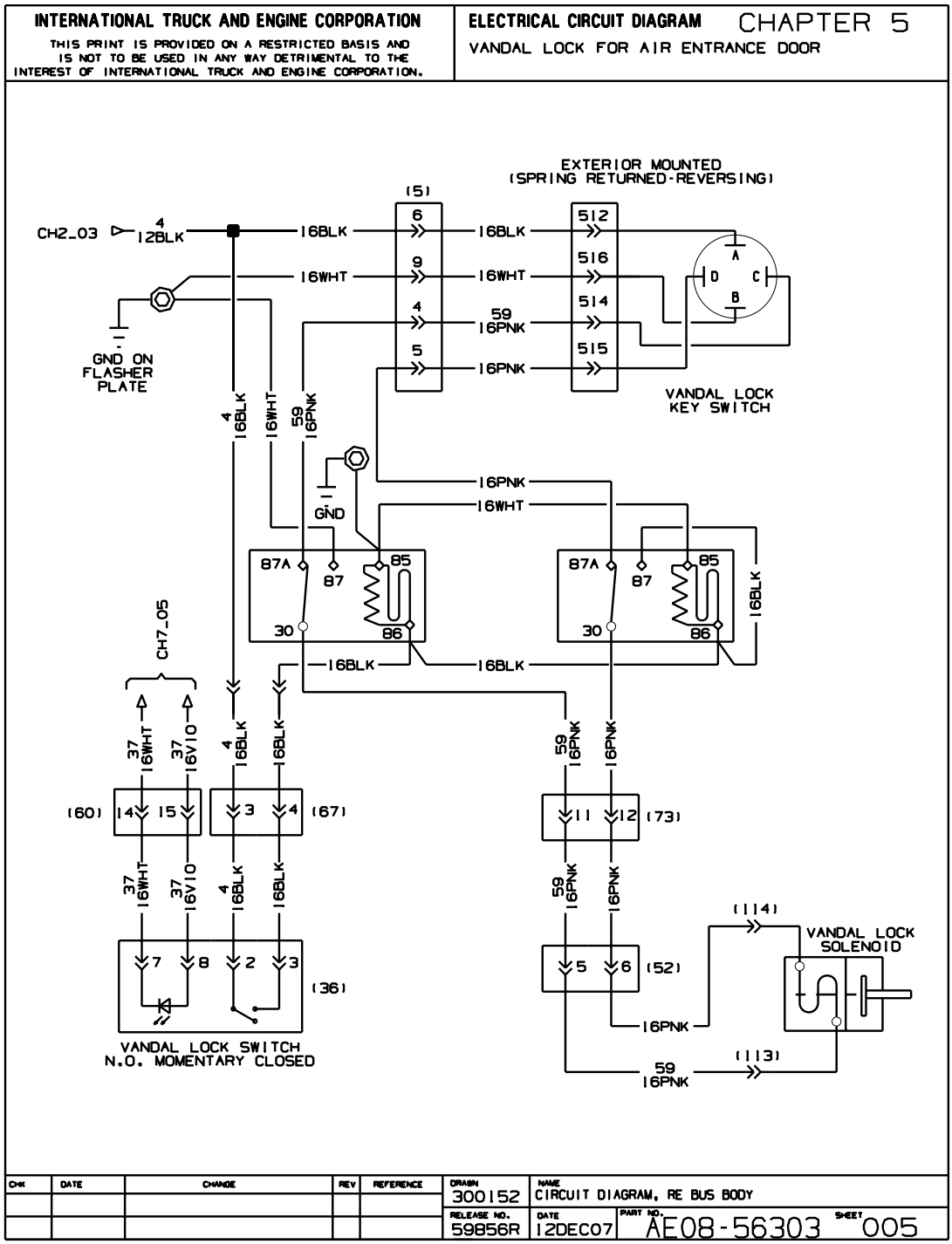

Figure 101 Vandal Lock for Air Entrance Door

5.6. MANUAL DOOR CONTROL WITH VANDAL LOCK, P. 6

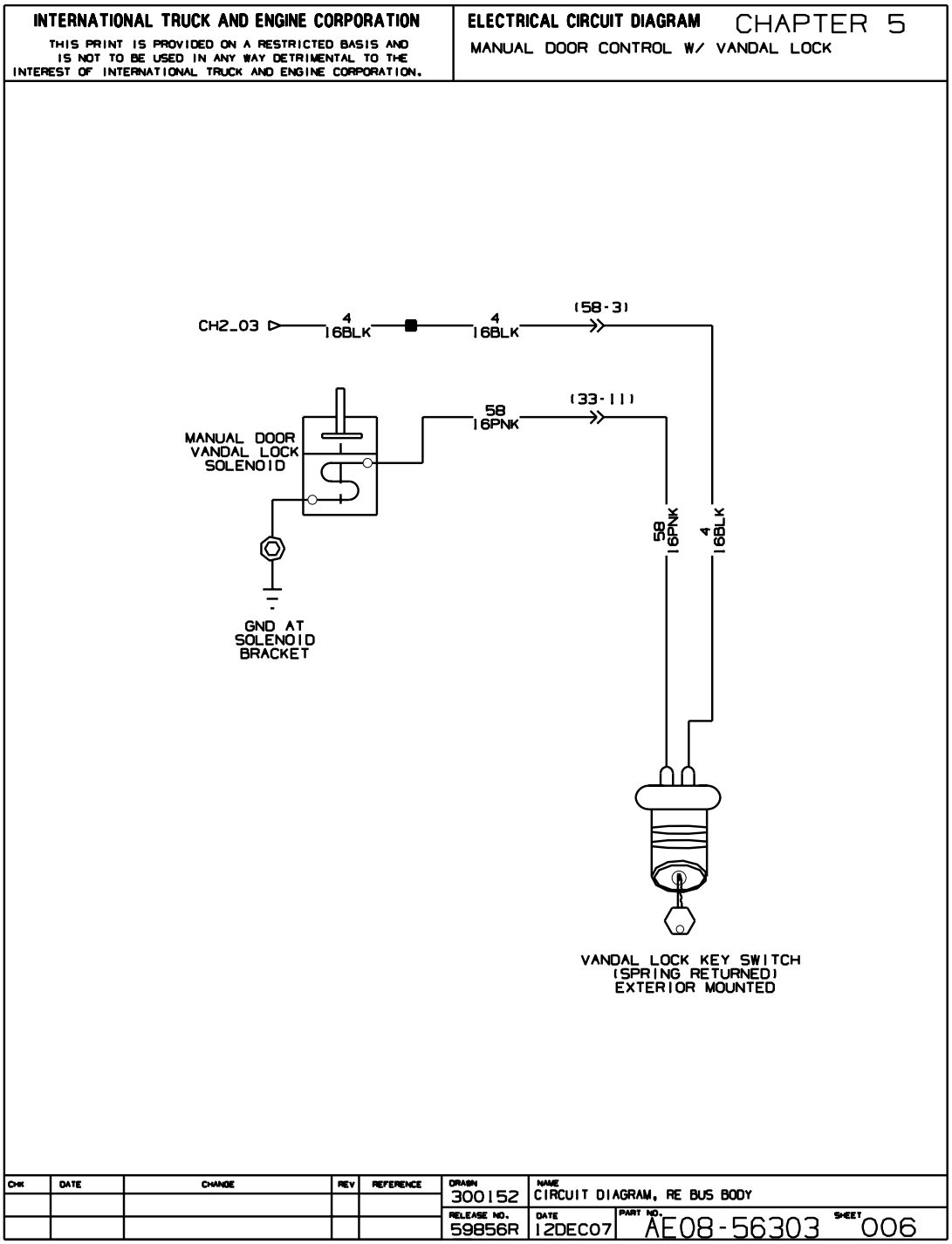

Figure 102 Manual Door Control with Vandal Lock

5.7. AIR DOOR WITH 2 POSITION DOOR CONTROL, P. 7

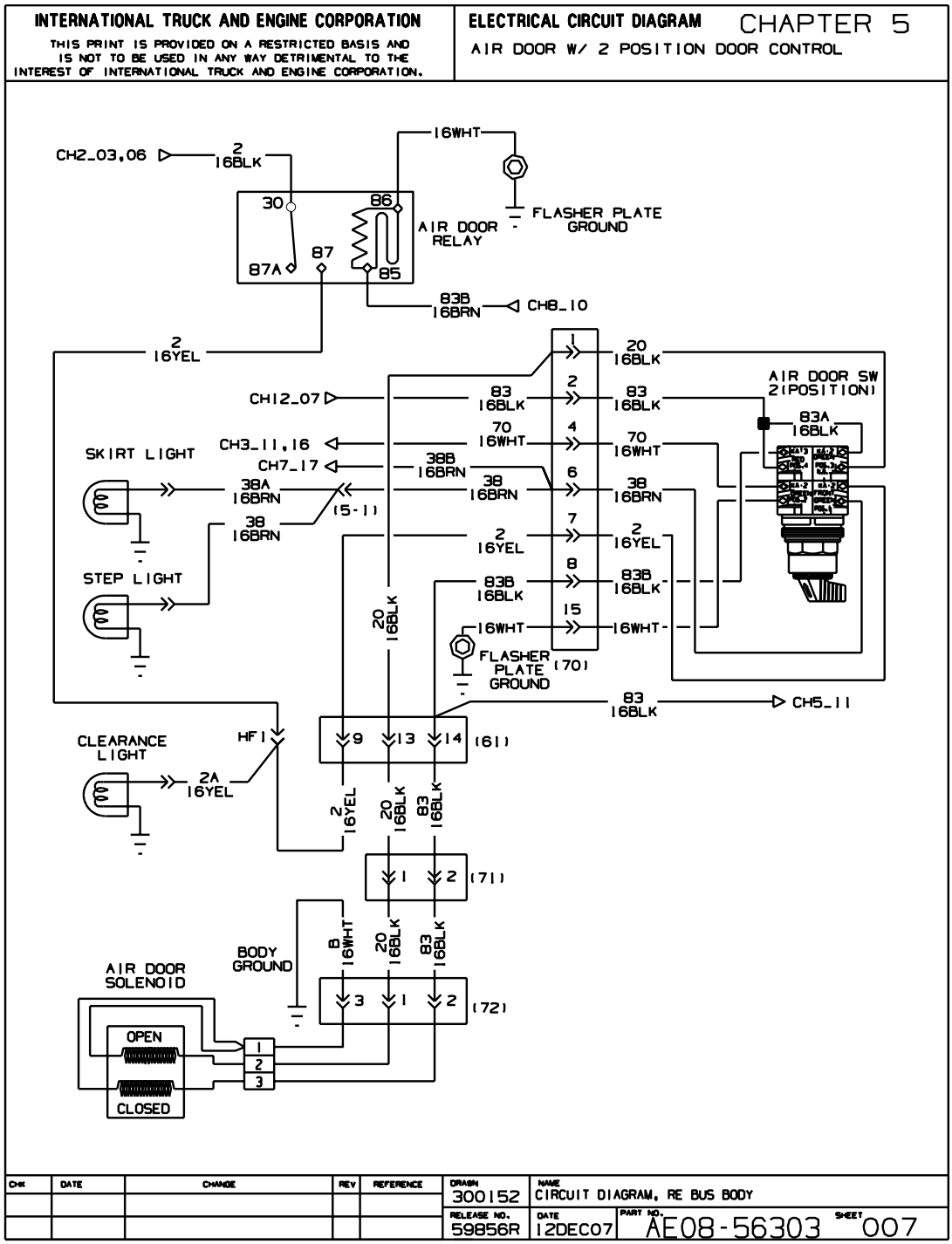

Figure 103 Air Door with 2 Position Door Control

5.8. AIR DOOR WITH 3 POSITION DOOR CONTROL, P. 8

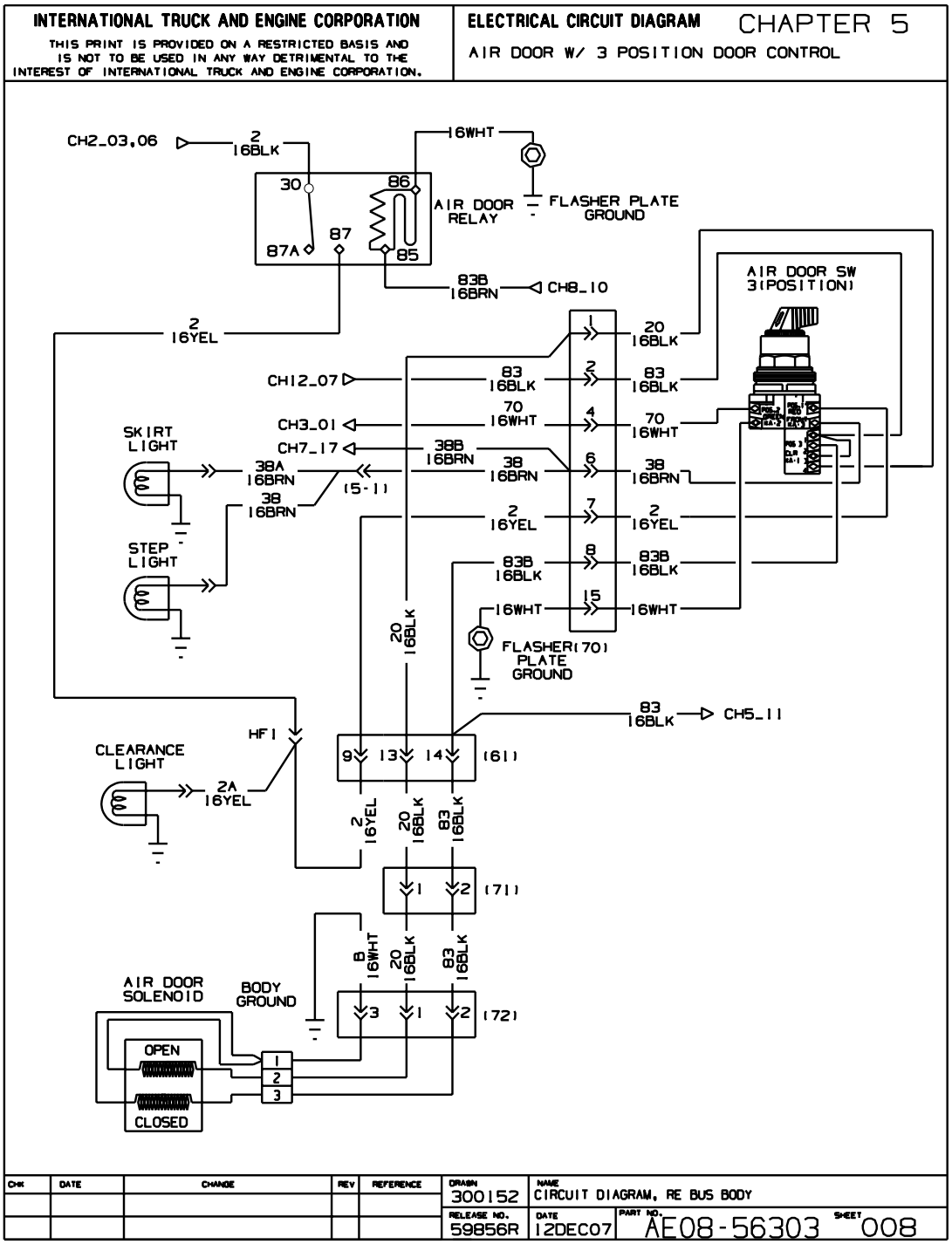

Figure 104 Air Door with 3 Position Door Control

5.9. AIR DOOR WITH 3 POSITION TOGGLE SWITCH DOOR CONTROL, P. 9

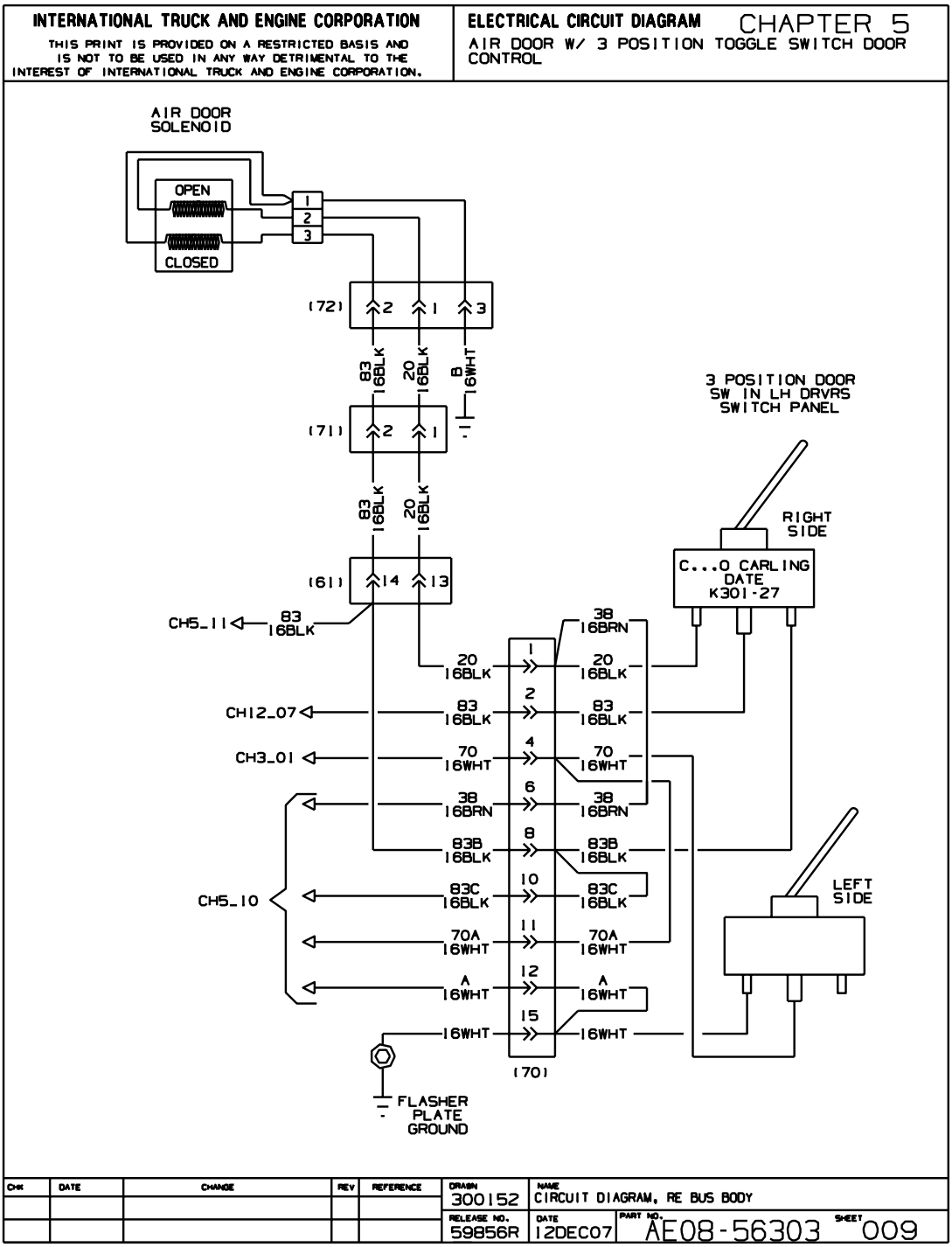

Figure 105 Air Door with 3 Position Toggle Switch Door Control

5.10. AIR DOOR WITH 3 POSITION TOGGLE SWITCH DOOR CONTROL, P. 10

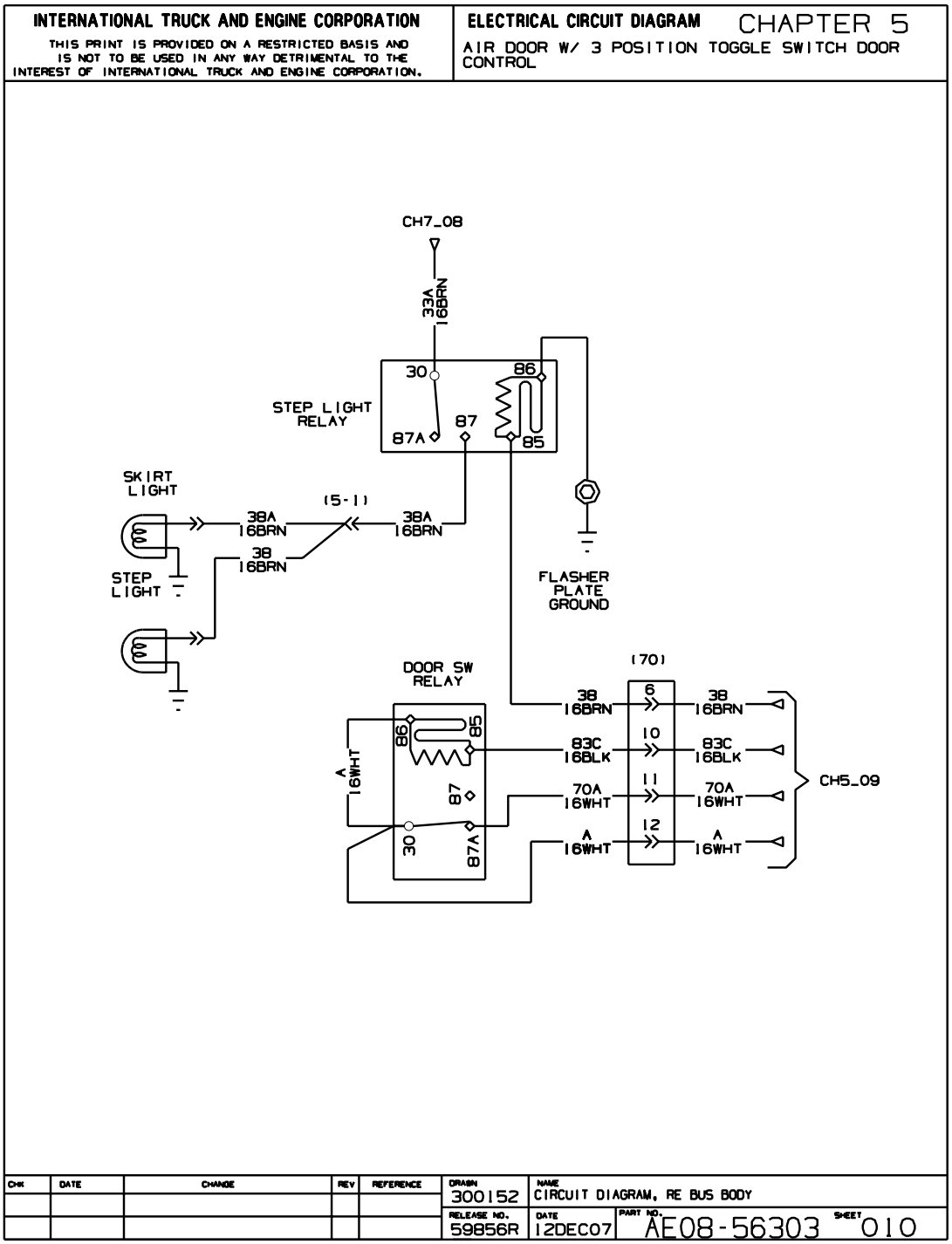

Figure 106 Air Door with 3 Position Toggle Switch Door Control

5.11. DUMP VALVE, P. 11

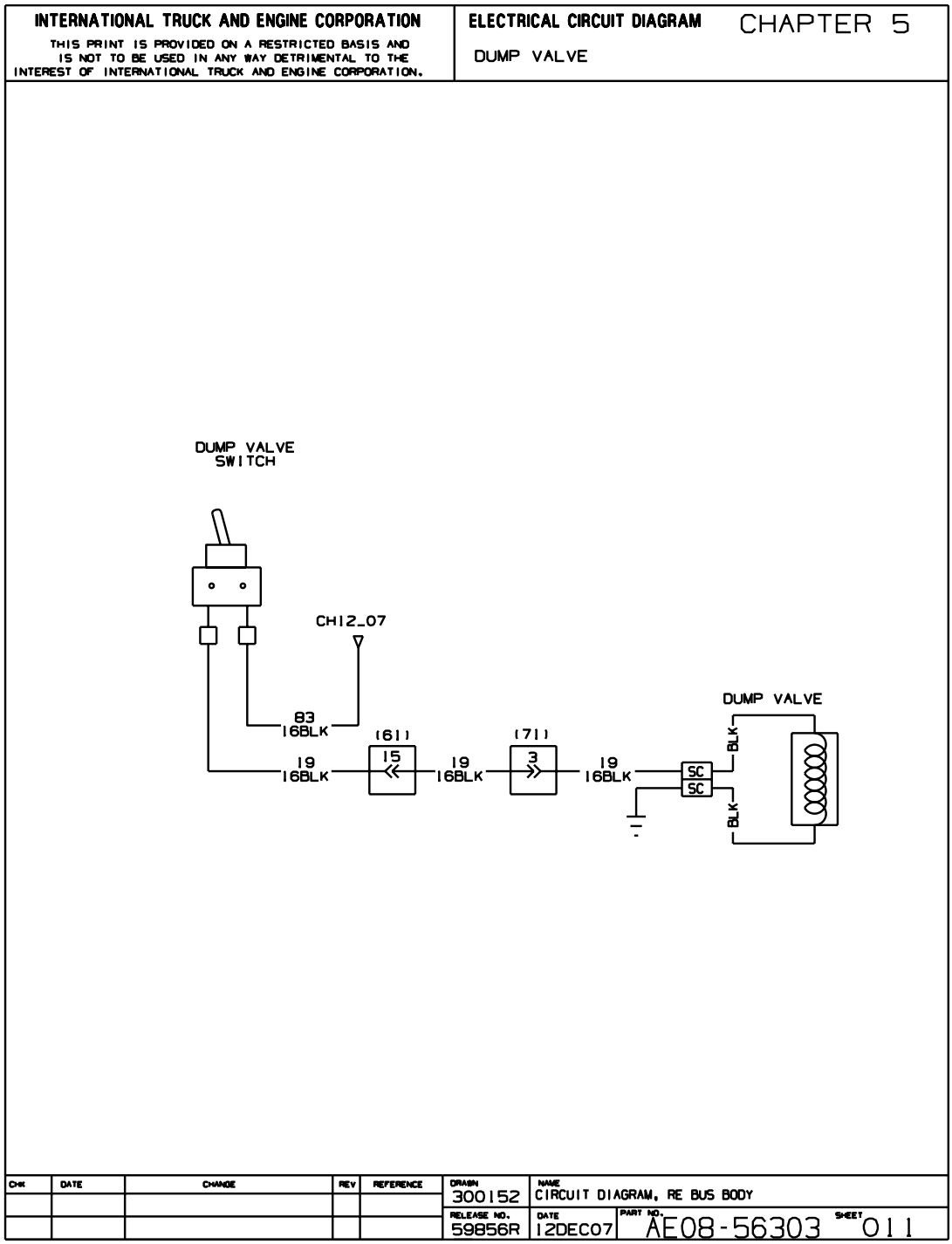

Figure 107 Dump Valve

5.12. MARYLAND AIR DOOR EXTERNAL SWITCH RELEASE, P. 12

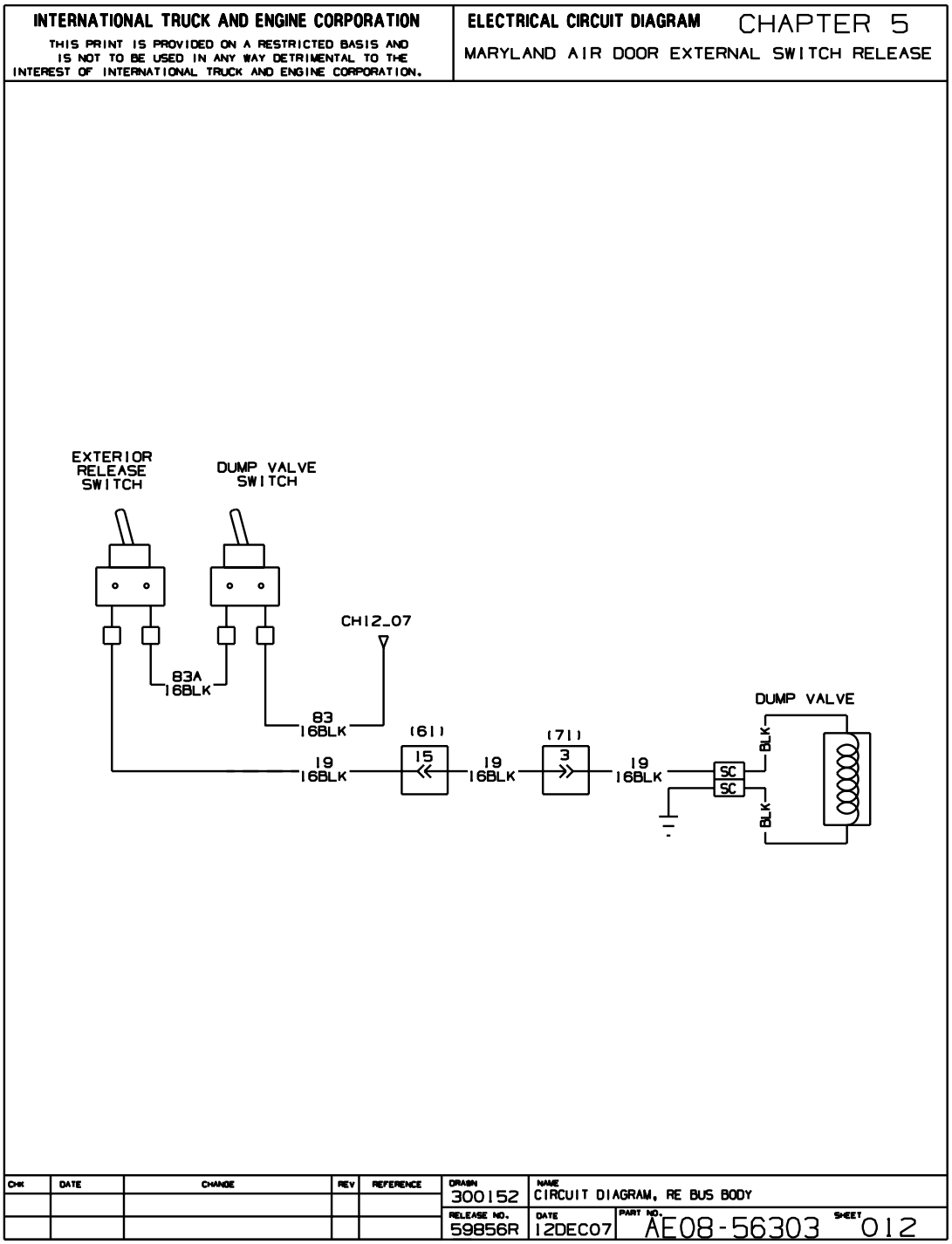

Figure 108 Maryland Air Door External Switch Release

5.13. 3–POSITION TOGGLE SWITCH FOR ELECTRIC ENTRANCE DOOR (FAIRFAX COUNTY), P. 13

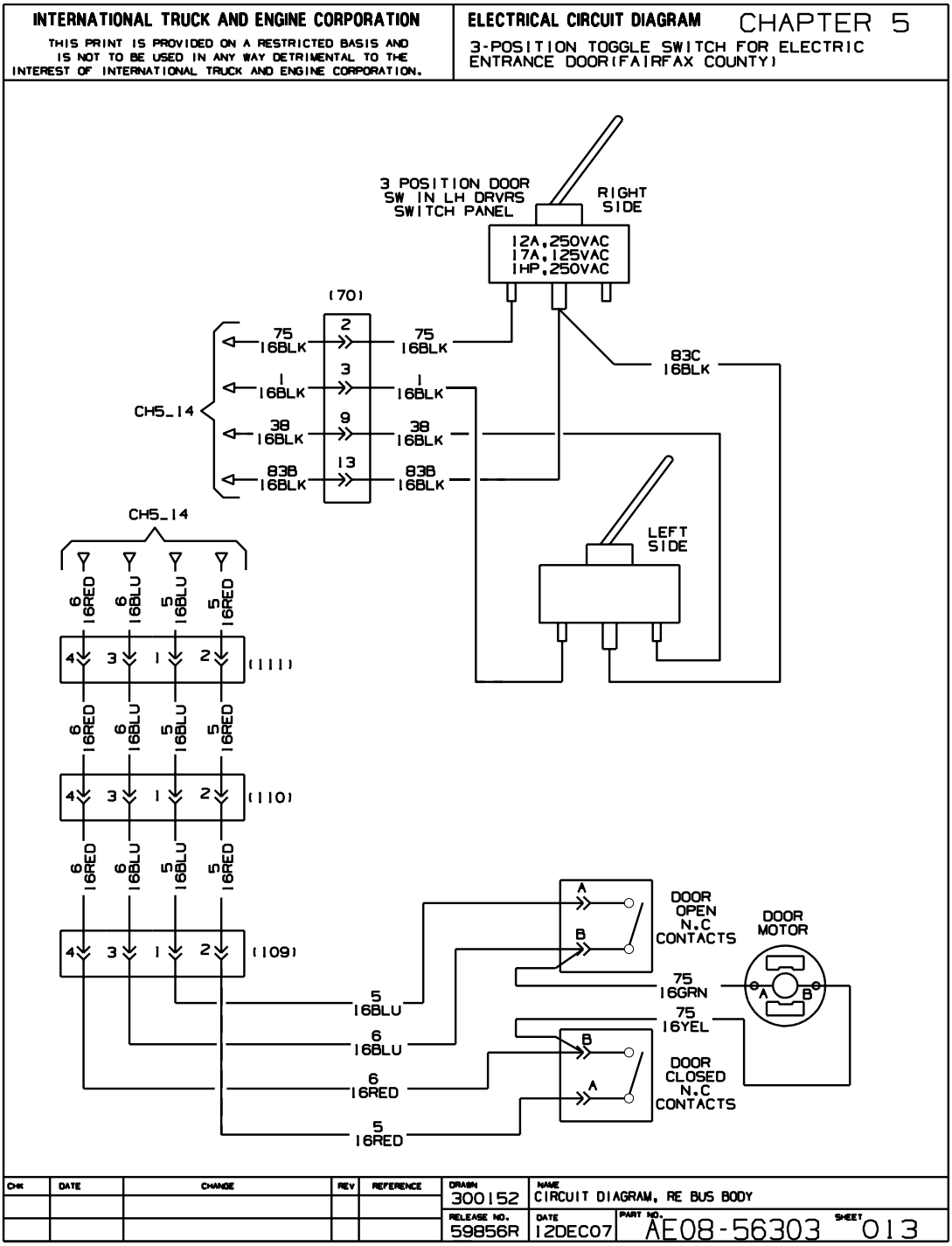

Figure 109 3–Position Toggle Switch for Electric Entrance Door (Fairfax County)

5.14. 3–POSITION TOGGLE SWITCH FOR ELECTRIC ENTRANCE DOOR (FAIRFAX COUNTY), P. 14

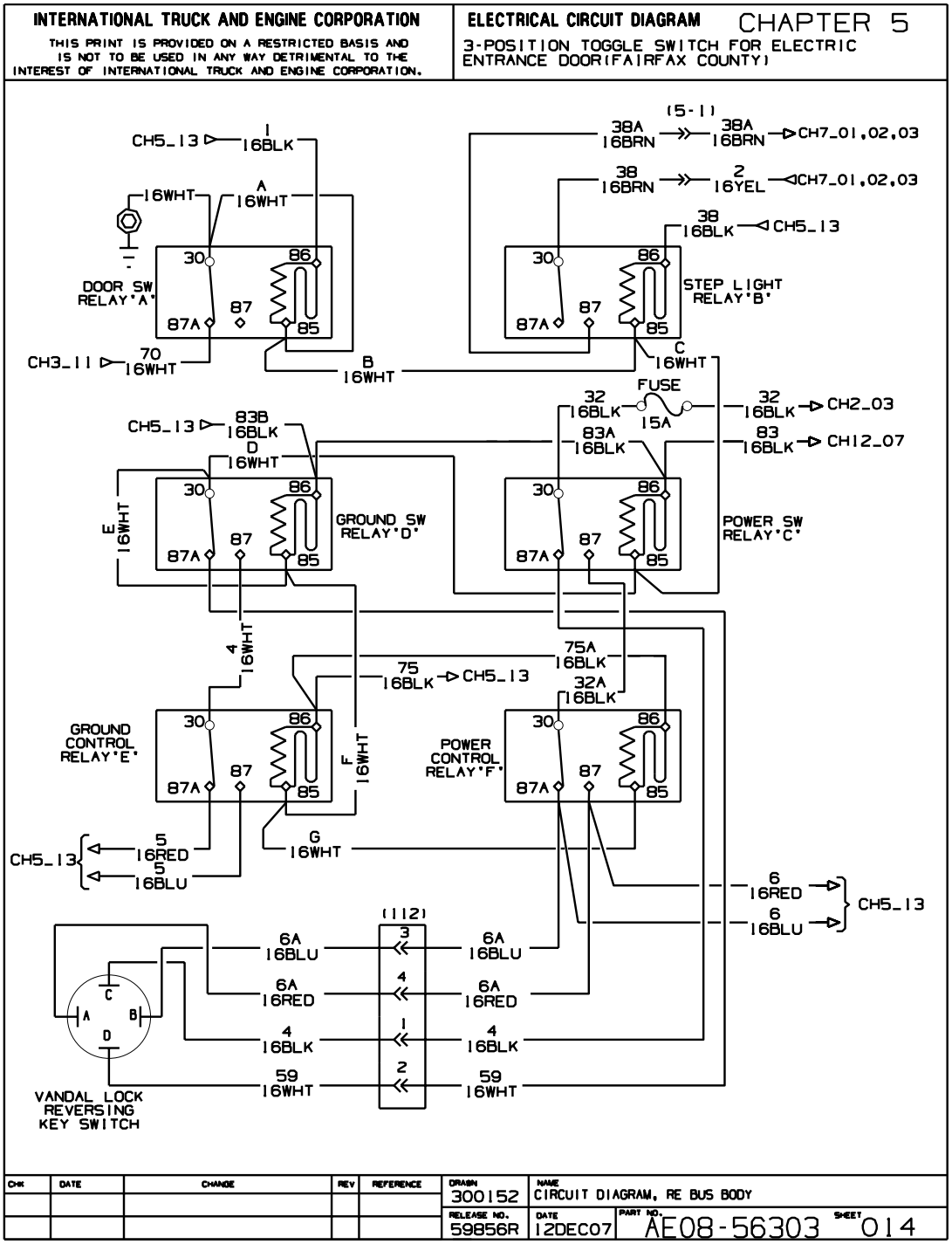

Figure 110 3–Position Toggle Switch for Electric Entrance Door (Fairfax County)

5.15. 2–POSITION ROTARY FOR AIR ENTRANCE DOOR SWITCH, P. 15

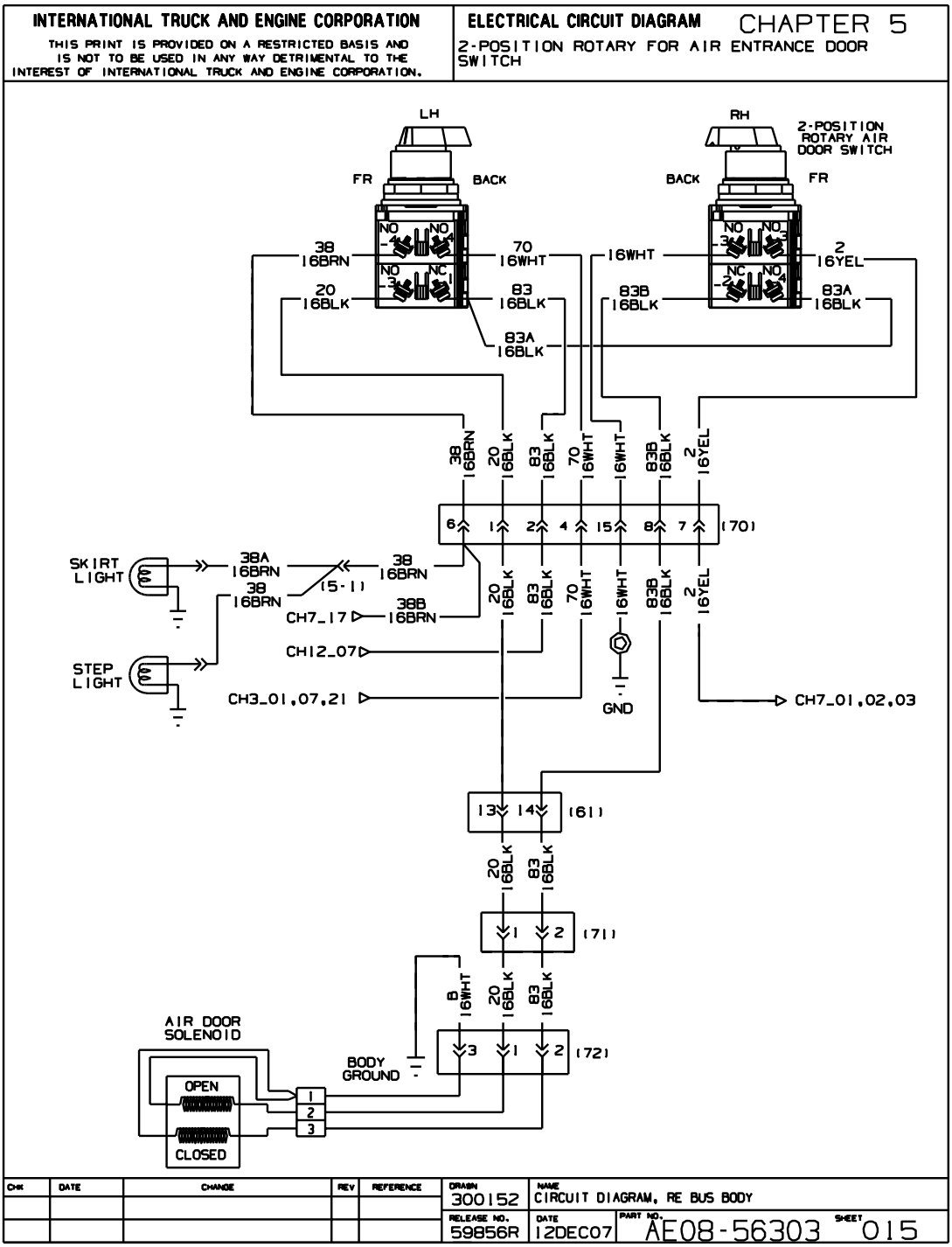

Figure 111 2–Position Rotary for Air Entrance Door Switch

5.16. 3–POSITION ROTARY FOR AIR ENTRANCE DOOR SWITCH, P. 16

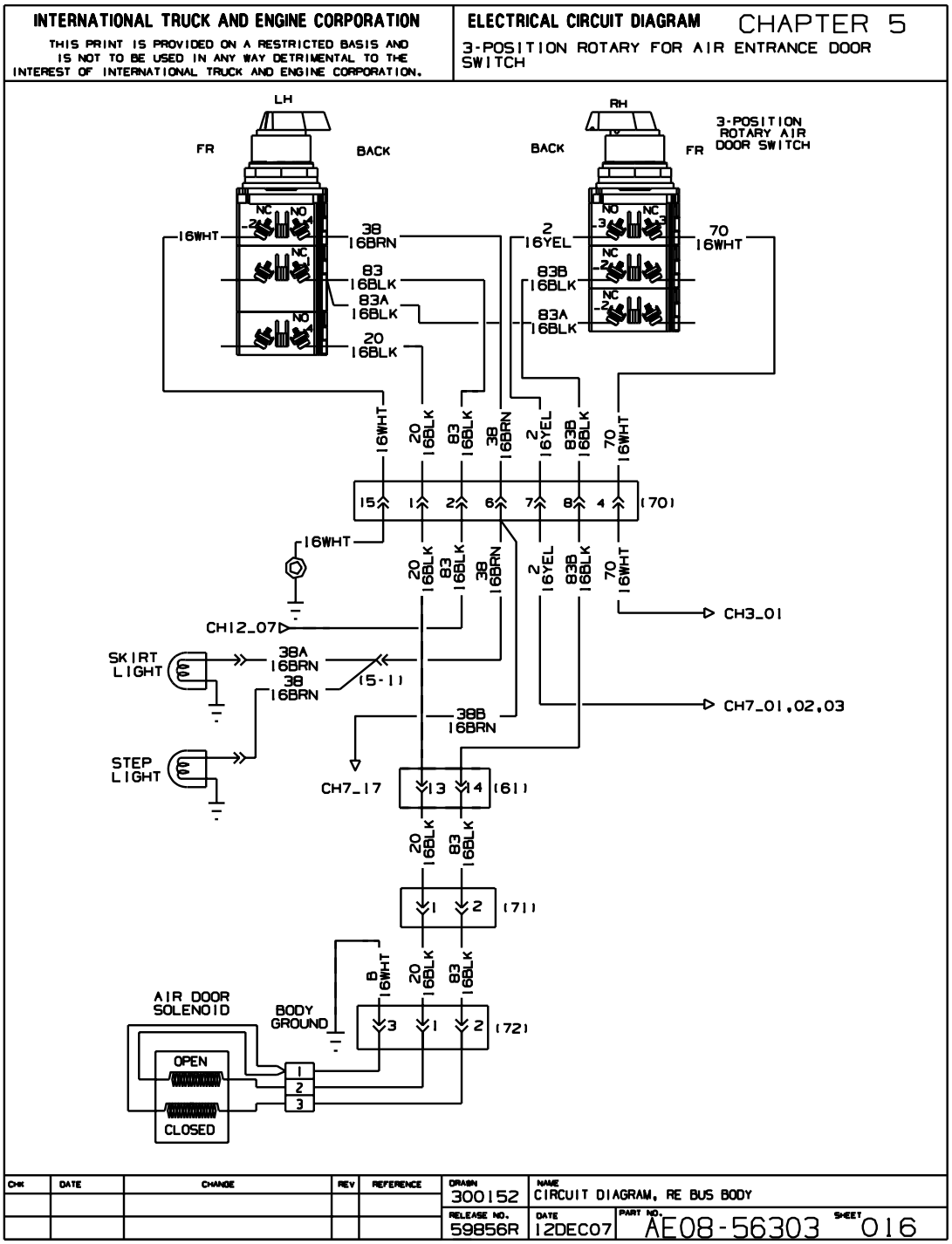

Figure 112 3–Position Rotary for Air Entrance Door Switch

5.17. 2–POSITION ROTARY FOR ELECTRIC ENTRANCE DOOR SWITCH, P. 17

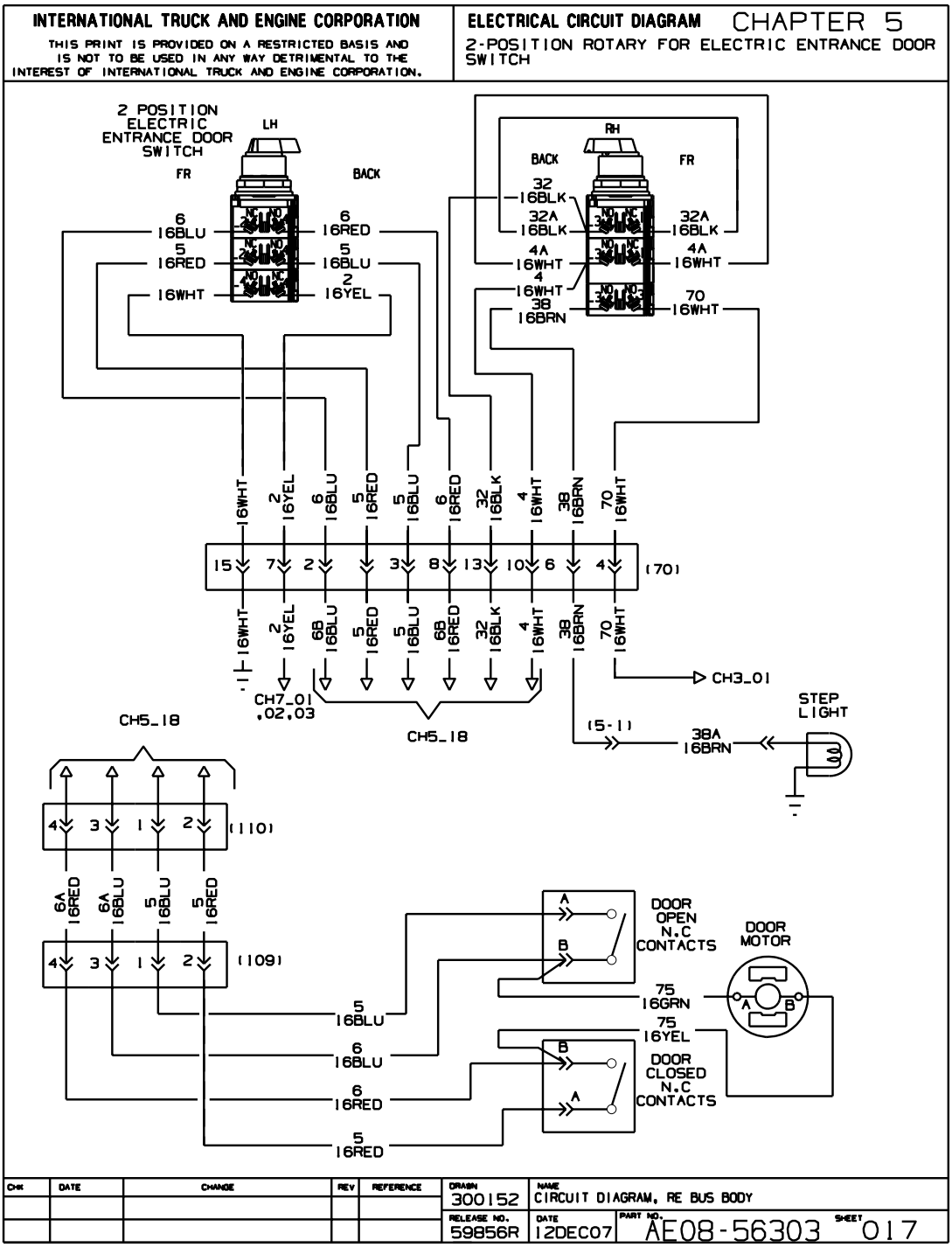

Figure 113 2–Position Rotary for Electric Entrance Door Switch

5.18. 2–POSITION ROTARY FOR ELECTRIC ENTRANCE DOOR SWITCH, P. 18

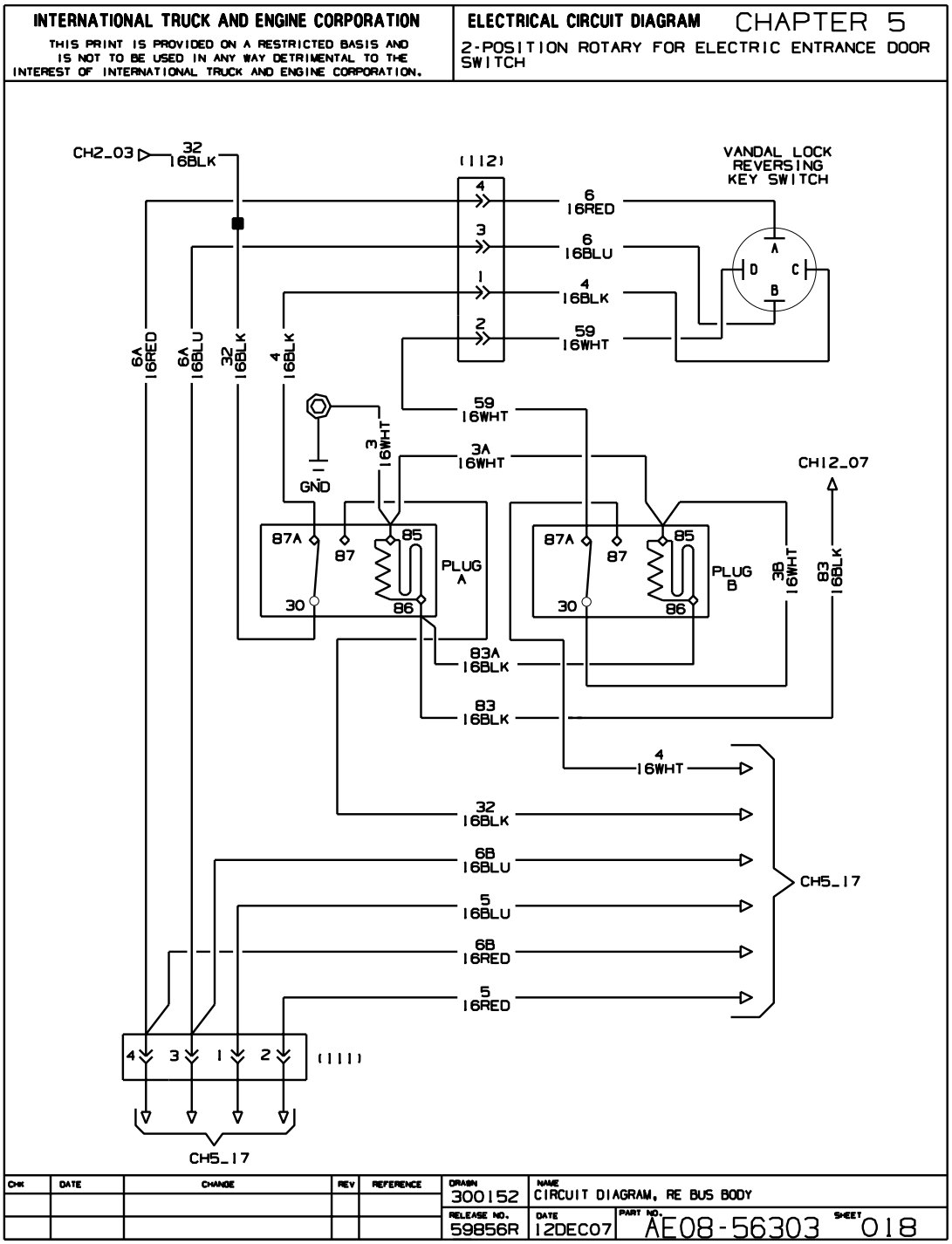

Figure 114 2–Position Rotary for Electric Entrance Door Switch

5.19. 3–POSITION ROTARY FOR ELECTRIC ENTRANCE DOOR SWITCH, P. 19

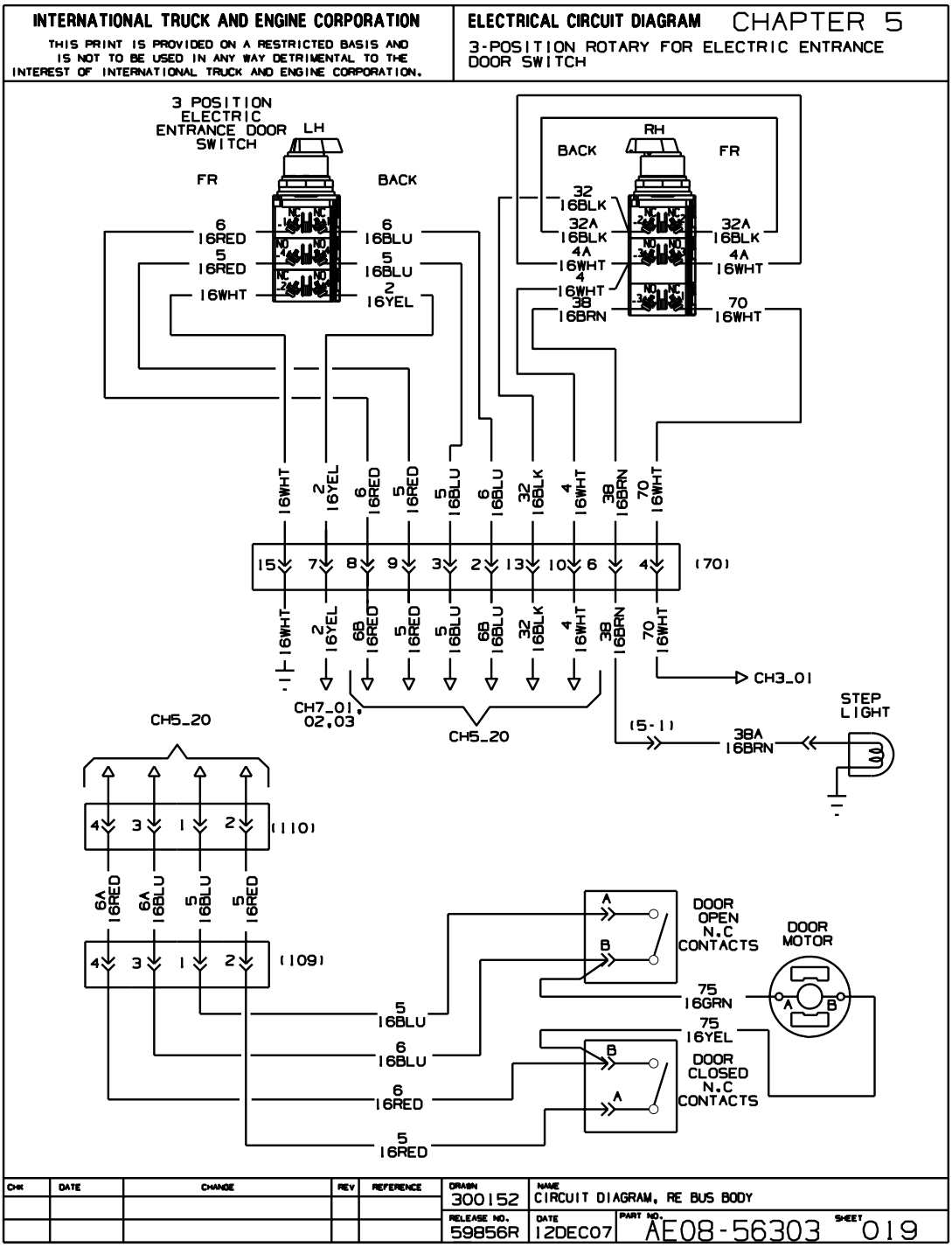

Figure 115 3–Position Rotary for Electric Entrance Door Switch

5.20. 3–POSITION ROTARY FOR ELECTRIC ENTRANCE DOOR SWITCH, P. 20

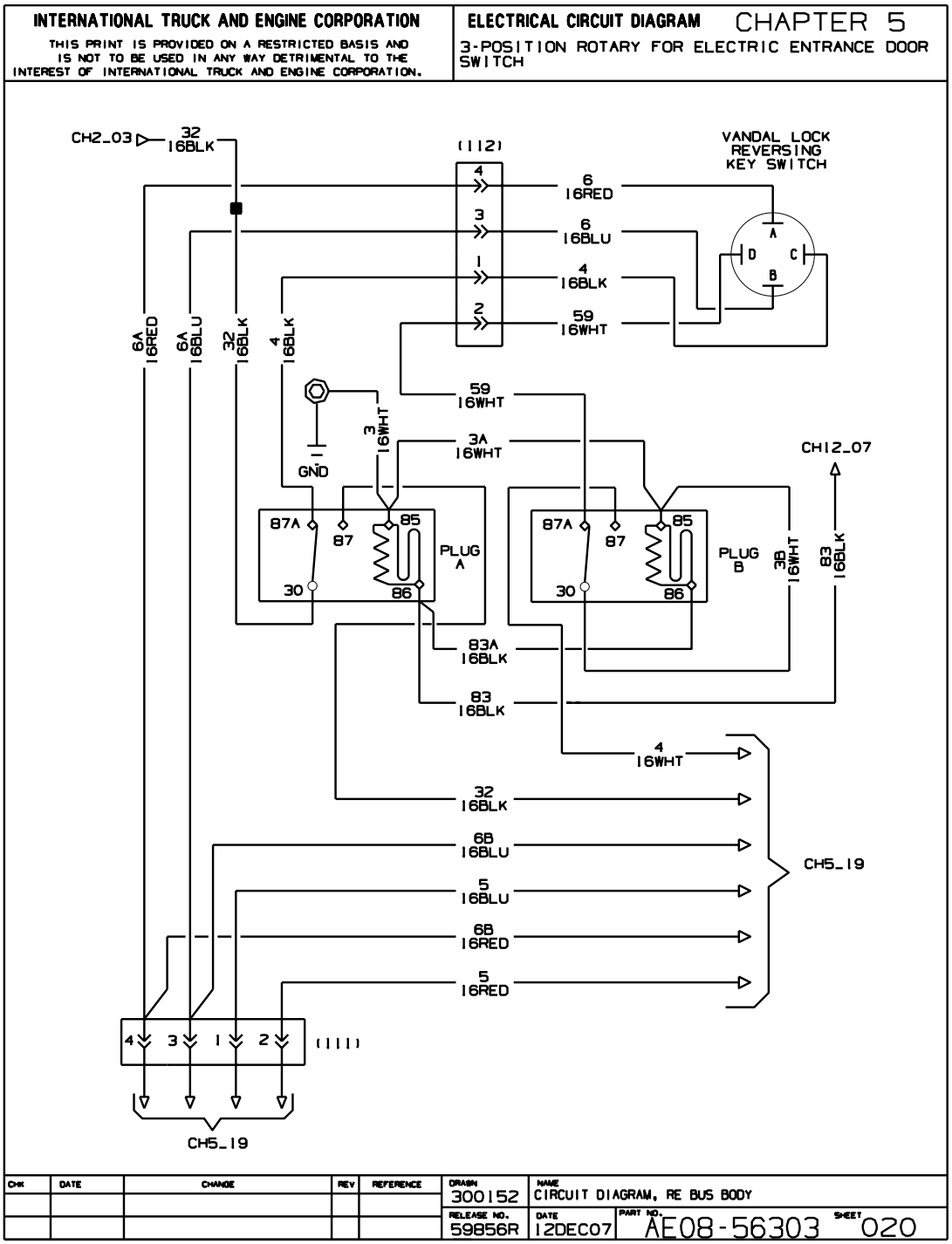

Figure 116 3–Position Rotary for Electric Entrance Door Switch

5.21. ALTERNATE ENTRANCE DOOR CONTROL, P. 21

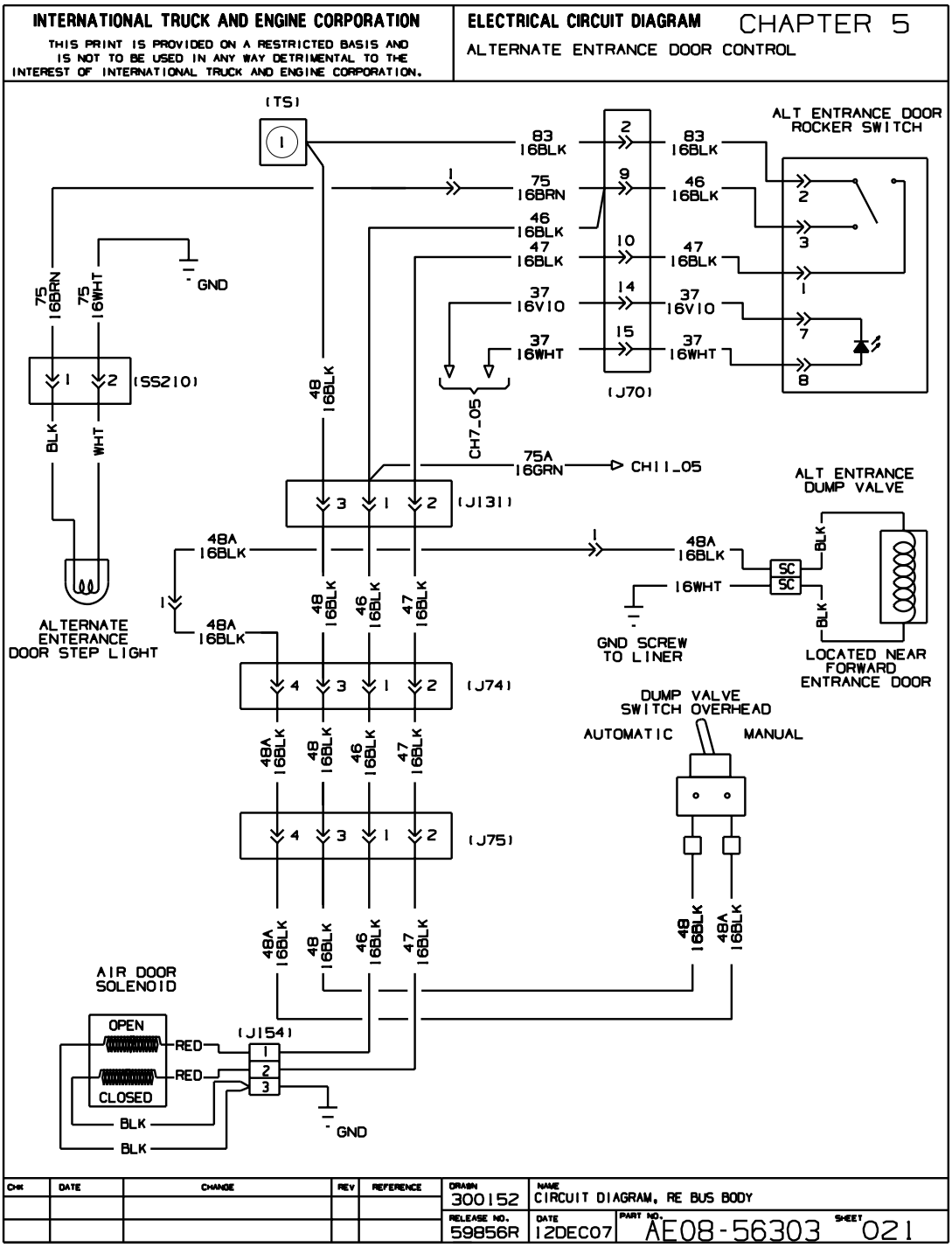

Figure 117 Alternate Entrance Door Control