Cause
Fuel pressure above system maximum limit

Details

Pressure on Rail is above system maximum limit (1485 bar). Engine actual running conditions, reading error from sensor or a defective wire harness may have generated this code.
As this is one of the sensors built-in at Rail, erase all active fault codes and proceed according to Troubleshooting Routine.

Strategy

Sensor is defective or pressure value exceeds 1485 bar.	
Red light turns ON	Engine power is reduced below 80%.
Fuel pump return will open	Rail pressure will be reduced to 80 bar.
ECM uses this signal to calculate fuel injection volume and as a safety element for the system.	

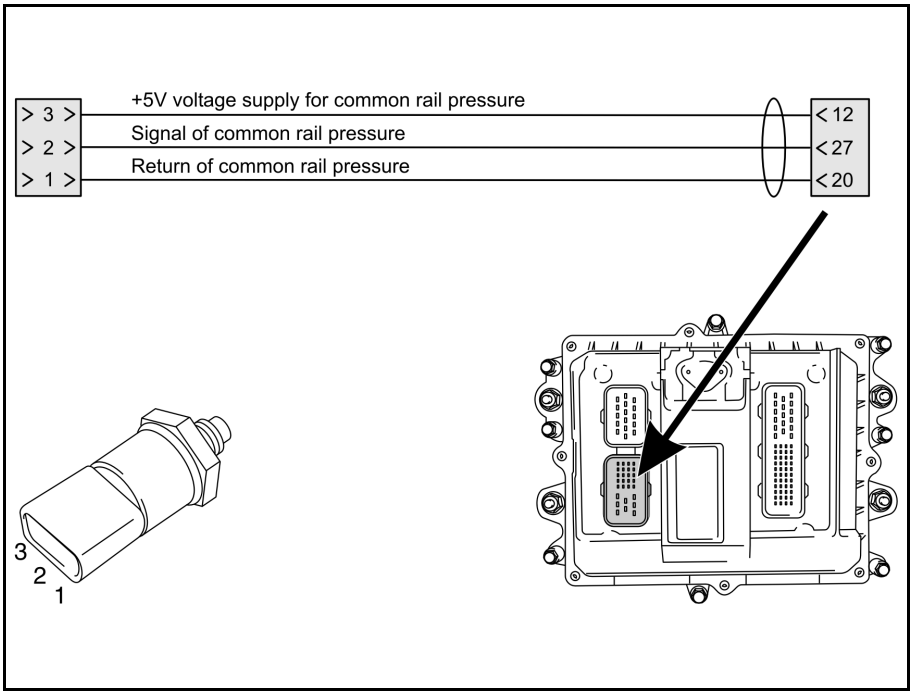

Troubleshooting Routine

Mpa	Volts
0	0.10 (± 5%)
40	1.17 (± 5%)
8	2.23 (± 5%)
120	3.30 (± 5%)
150	4.10 (± 5%)

- Is sensor according to above?

No → Send common rail tube to a dealer for analysis.

Yes ↓

- With open circuit, repeat the test.
- Is PCODE P0191 (open circuit) displayed?

No →

- Is PCODE P0190 displayed again?
- Check wire harness continuity between sensor connector pins 1 and 3 to ECM connector pins 12 and 20.
- Check wire harness continuity between pin 1 (to positive) and 2 (to ground).
- Check pins 12, 20 and 27 for open circuit.
- Is measured value ≤ 10 Ω?

Yes ↓

- Erase all inactive fault codes.
- Repeat the test.
- Is PCODE P0190 displayed?

No → Vehicle is OK.

Yes ↓

- Check electronic fuel actuator (Mprop) for proper connection.
- Check resistance of actuator coil. Value should be 1.0 ~ 2.2 Ω.
- Check wire harness continuity between sensor pins 1 and 2 and ECM connector pins 5 and 7.
- Check wire harness continuity between pin 1 (to ground) and 2 (to positive).
- Check pins 12, 20 and 27 for open circuit.
- Is measured value ≤ 10 W?

Yes →

- Repair wiring harness.
- Repeat the test.
- Is PCODE P0190 displayed again?

Yes →

- Send the high-pressure pump to a dealer for analysis.

No ↓

- Vehicle is OK.

Yes ↓

- Reconnect sensor wire harness.
- With engine running, check sensor for values according to table below:
  - At 600 rpm without load = 500 bar.
  - At 800 rpm without load = 800 bar.
- Are measured values OK?

Yes ↓

- Vehicle is OK.

Cause
Missing voltage signal from fuel pressure sensor.

Details

Possibly the circuit or Rail pressure sensor is in an open circuit condition, with no connection to ECM.
Create an inverse defect according to Troubleshooting Routine in order to locate the failure.

Strategy

Sensor is defective or pressure value exceeds 1485 bar.	
Red light turns ON	Engine power is reduced below 80%
Fuel pump return will open	Rail pressure will be reduced to 80 bar.
ECM uses this signal to calculate fuel injection volume and as a safety element for the system.	

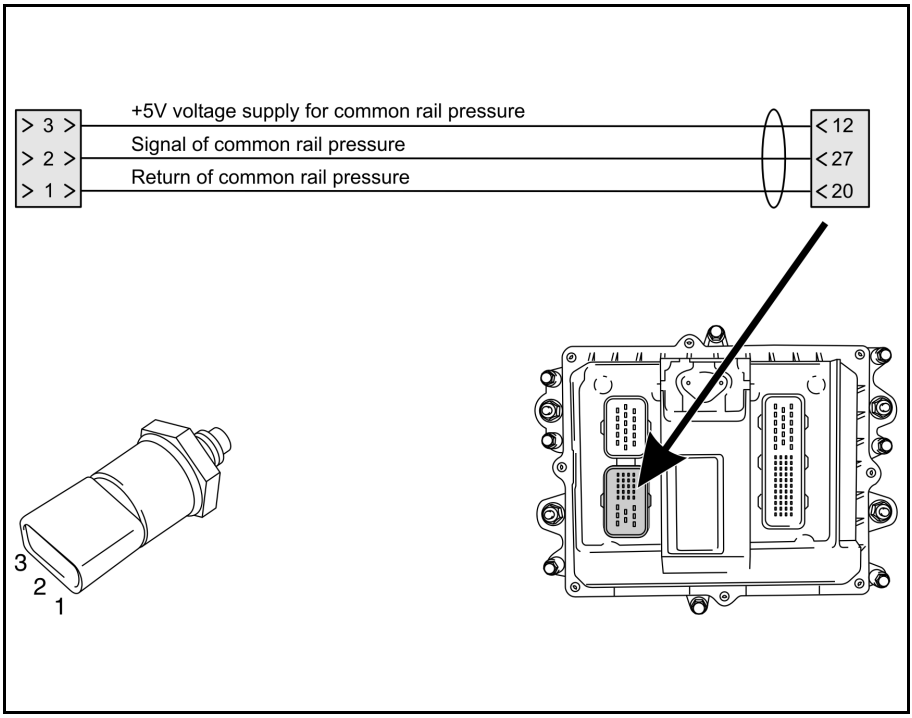

Troubleshooting Routine

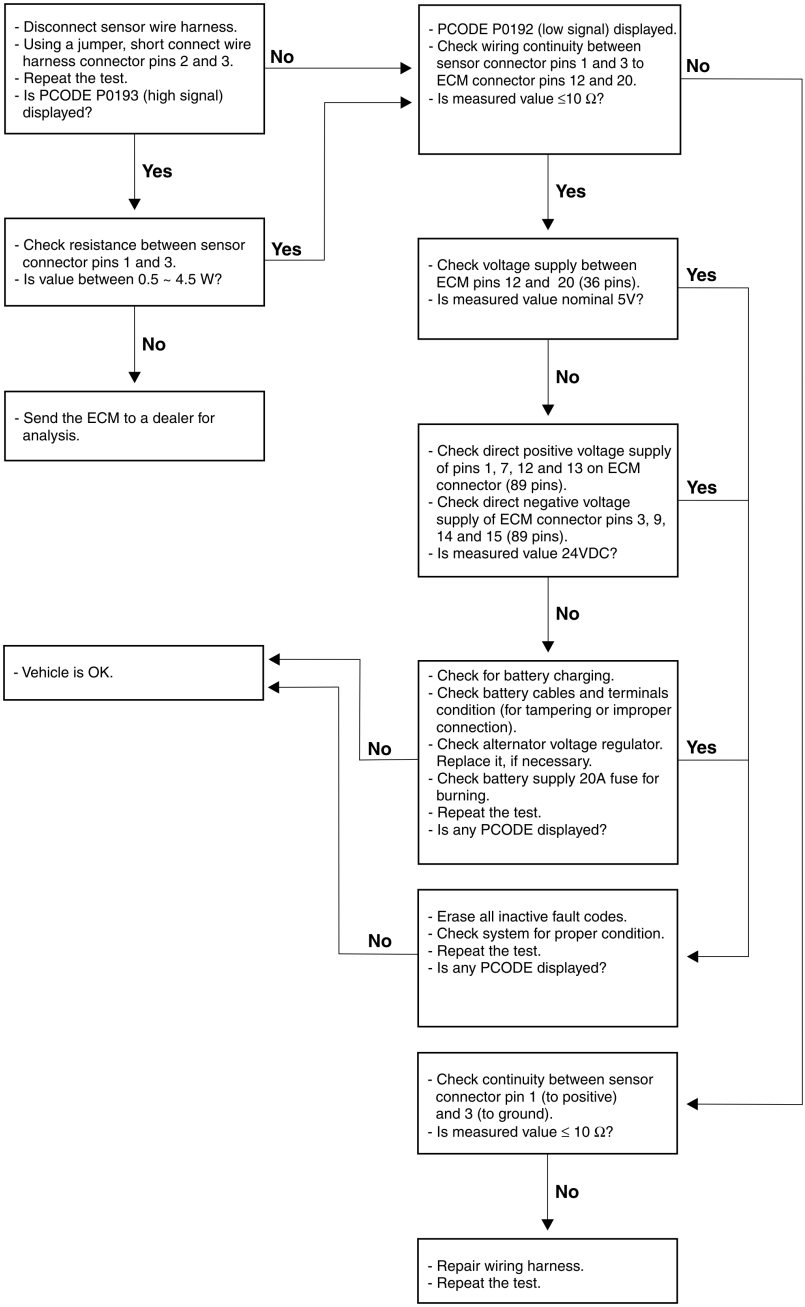

Cause
Low voltage on fuel pressure sensor.

Details

A voltage low signal coming from Rail pressure sensor was detected. There is possibly a biased sensor's resistance or a short circuit to ground.
As this is one of the sensors built-in at Rail, erase all active fault codes and proceed according to Troubleshooting Routine.

Strategy

Sensor is defective or pressure value exceeds 1485 bar.	
Red light turns ON	Engine power is reduced below 80%
Pump return will open	Rail pressure will be reduced to 80 bar.
ECM uses this signal to calculate fuel injection volume and as a safety element for the system.	

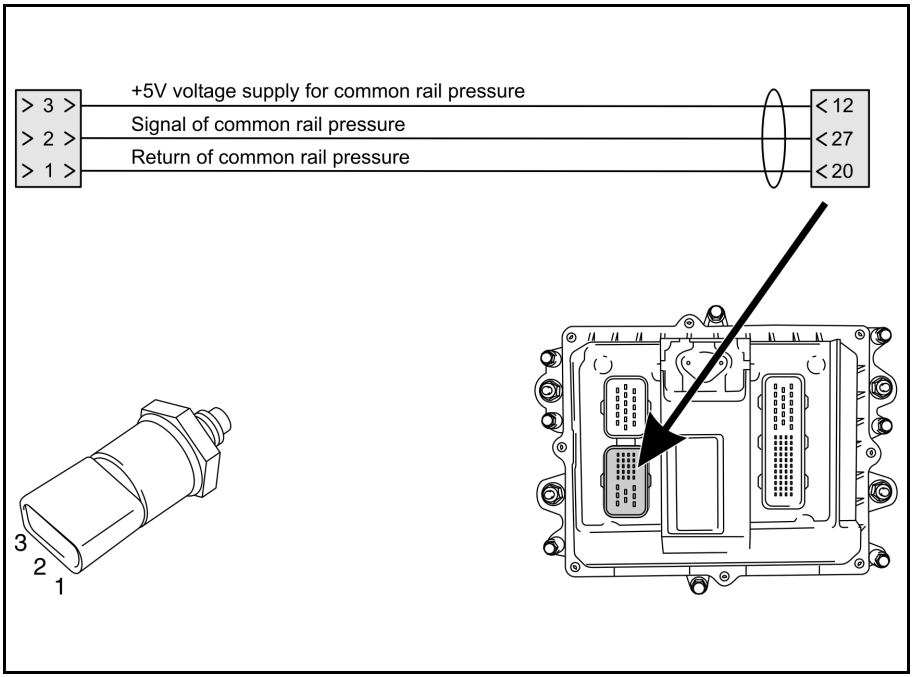

Troubleshooting Routine

- Disconnect rail pressure sensor connector and install diagnosis tool.
- Turn ignition on and check for PCODES.

Yes →
- Check for short circuit on sensor connector, ECM connector and wire harness.
- Repair as necessary.
- Repeat the test.

No ↓

- With rail fuel pressure sensor disconnected, install a voltmeter between connector pins 1 and 3.
- Turn on ignition switch and check the voltage.
- Is measured value equal to 5V?

No →
- Is measured value more than 5V?

Yes ↑
Check for:
- Incorrect voltage supply on system.
- Defective ECM.

No ↓
- Check for continuity between sensor connector pin 3 and ECM connector pin 2.12.
- Check for continuity between sensor connector pins 1 and ECM connector pin 2.20.
- Check for improper connection or oxidation on sensor and ECM connectors.
- Repeat the tests.

Yes ↓

- Reconnect sensor connector.
- Apply a voltmeter between pins 1 and 2 on rear side of sensor connector.
- Turn ignition on without cranking the engine.
- Is measured value around 0.5V?

No →
- Disconnect sensor connector and check for continuity between connector pin 2 and ECM pin 2.27.
- Check for improper connection or oxidation on sensor and ECM connectors.
- If voltage is 0V, check for short circuit on sensor and ECM connector, wire harness or rail pressure sensor.
- Repair as necessary
- Repeat the tests.

Yes ↓

- Crank the engine for 5s, at least.
- Is measured value above 1V?

No →
- Check for lack of fuel at common rail.
- If there is pressurized fuel at rail (check fuel flow at rail return line), replace the pressure sensor.
- Repeat the tests.

Yes ↓

- Check voltage on pressure sensor according to engine rotation:
- Idling - 1.3 ~ 1.5 V;
- 1500 RPM - 1.4 ~ 1.6 V;
- 2000 RPM - 2.0 ~ 2.2 V;
- 2500 RPM - 2.3 ~ 2.5 V.

- Are measured values according to the table?

No →
- If engine is not running, check for mechanical problems or follow the Troubleshooting Routines corresponding to found PCODES.
- Check for lack of fuel, air intake leakage, possible system leakages, or defective safety valve on rail.
- Check fuel lines and filters for clogging.
- Check rail pressure sensor function and replace it, if necessary.
- Repeat the tests.

Yes ↓

- Rail pressure sensor OK.
- Repeat the test.
- If none PCODE is on memory, vehicle is OK.

Cause
High voltage on fuel pressure sensor.

Details

A voltage high signal was detected coming from Rail pressure sensor. There is possibly a biased of sensor's resistance or a short circuit to positive battery voltage.
As this is one of the sensors built-in at Rail, erase all active fault codes and proceed according to Troubleshooting Routine.

Strategy

Sensor is defective or pressure value exceeds 1485 bar.	
Red light turns ON	Engine power is reduced below 80%
Fuel pump return will open	Rail pressure will be reduced to 80 bar.
ECM uses this signal to calculate fuel injection volume and as a safety element for the system.	

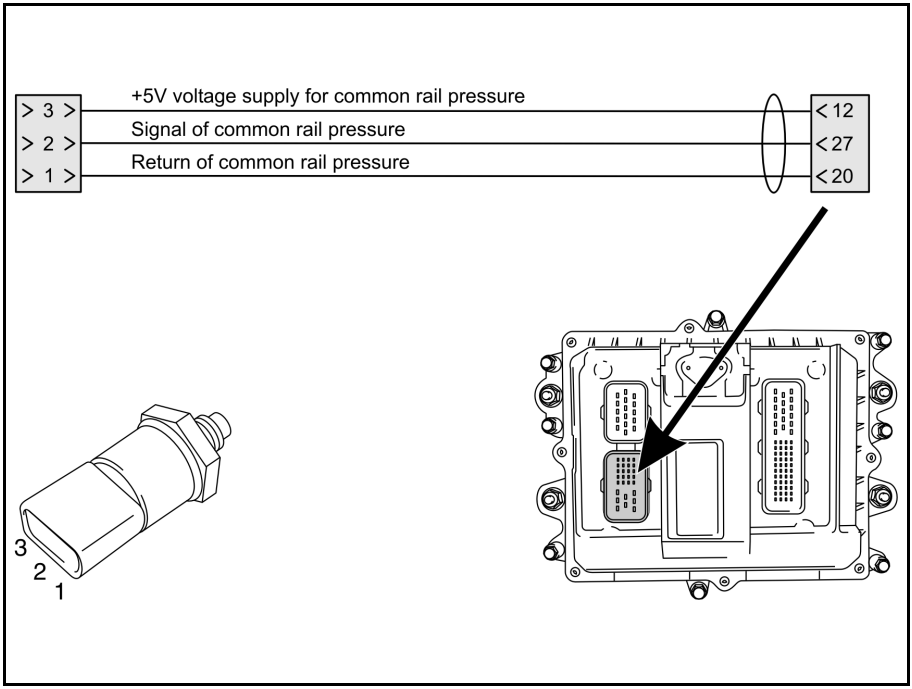

Troubleshooting Routine

- Disconnect rail fuel pressure sensor and install a voltmeter between connector pins 1 and 3.
- Turn on ignition switch and check the voltage.
- Is measured value equal to 5V?

No →

- Is measured value more than 5V?

Yes →

Check for:
- Incorrect voltage supply on system.
- Defective ECM.

No →

- Check for continuity between sensor connector pin 3 and ECM connector pin 2.12.
- Check for continuity between sensor connector pins 1 and ECM connector pin 2.20.
- Check for improper connection or oxidation on sensor and ECM connectors.
- Repeat the tests.

Yes ↓

- Reconnect sensor connector.
- Apply a voltmeter between pins 1 and 2 on rear side of sensor connector.
- Turn ignition on without cranking the engine.
- Is measured value around 0.5V?

No →

- Disconnect sensor connector and check for continuity between connector pin 2 and ECM pin 2.27.
- Check for improper connection or oxidation on sensor and ECM connectors.
- If voltage is 0V, check for short circuit on sensor and ECM connector, wire harness or rail pressure sensor.
- Repair as necessary
- Repeat the tests.

Yes ↓

- Crank the engine for 5s, at least.
- Is measured value above 1V?

No →

- Check for lack of fuel at common rail.
- If there is pressurized fuel at rail (check fuel flow at rail return line), replace the pressure sensor.
- Repeat the tests.

Yes ↓

- Check voltage on pressure sensor according to engine rotation:
- Idling - 1.3 ~ 1.5 V;
- 1500 RPM - 1.4 ~ 1.6 V;
- 2000 RPM - 2.0 ~ 2.2 V;
- 2500 RPM - 2.3 ~ 2.5 V.

- Are measured values according to the table?

No →

- If engine is not running, check for mechanical problems or follow the Troubleshooting Routines corresponding to found PCODES.
- Check for lack of fuel, air intake leakage, possible system leakages, or defective safety valve on rail.
- Check fuel lines and filters for clogging.
- Check rail pressure sensor function and replace it, if necessary.
- Repeat the tests.

Yes ↓

- Rail pressure sensor OK.
- Repeat the test.
- If none PCODE is on memory, vehicle is OK.

Cause
Oil temperature above engine protection limit.

Details

The lubricating oil temperature is above the value programmed for engine protection (140°C). Engine actual running conditions, reading error from sensor or a defective wire harness may have generated this code. **Before starting the test, check for failures on cooling system and oil cooler.**

Strategy

Above 140 °C	Yellow light turns ON - Engine power is reduced by 20%.
ECM uses this signal for engine protection, avoiding degradation of lubricating oil.	

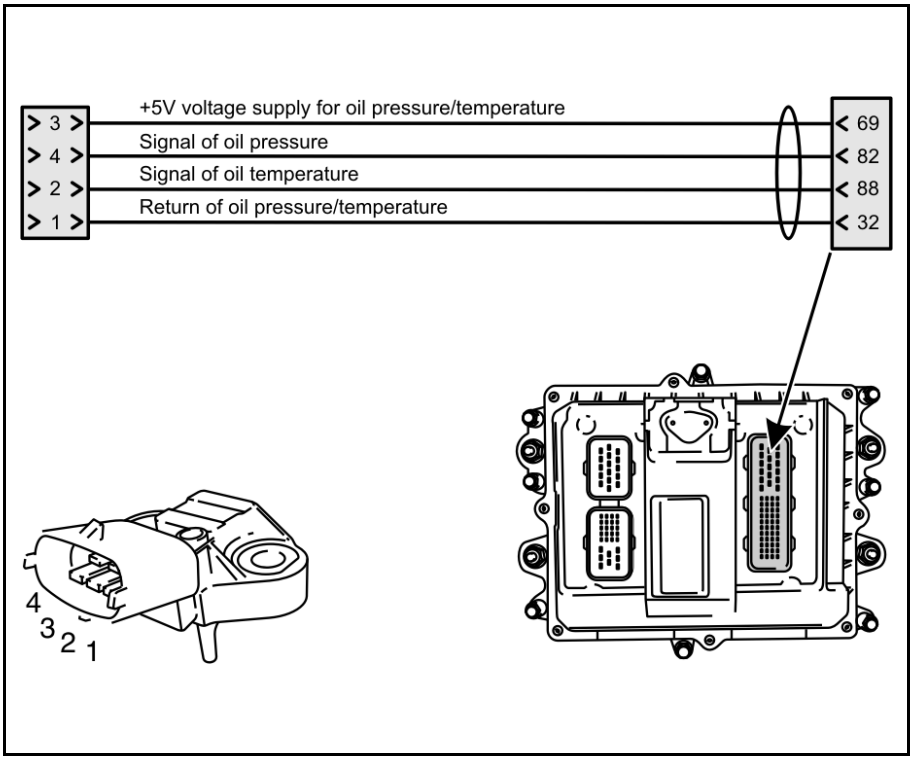

Troubleshooting Routine

°C	Ω
-10	9.397 (± 6%)
0	5.896 (± 6%)
10	3.792 (± 6%)
20	2.500 (± 6%)
25	2.057 (± 5%)
30	1.707 (± 5%)
40	1.175 (± 5%)
50	0.834 (± 4%)
60	0.596 (± 4%)
70	0.435 (± 4%)
80	0.323 (± 2%)
90	0.243 (± 2%)
100	0.186 (± 2%)
110	0.144 (± 2%)
120	0.106 (± 2%)
130	0.084 (± 2%)

- Is sensor according to table?

No →

- Check for damaged pins.
- Remove sensor and check for contamination on temperature measuring area. Clean it as necessary.
- Reconnect sensor wiring harness.
- Repeat the test.
- Is PCODE P0199 (open circuit) displayed?

Yes ↓

- Replace the sensor.
- Check for contamination or oil buildup at sensor's mounting area. Clean it.
- Repeat the test.
- Is any PCODE displayed?

No ↓

- Vehicle is OK.

Yes ↓

- With open circuit, repeat the test.
- Is PCODE P0199 (open circuit) displayed?

No →

- Erase all inactive fault codes.
- Check sensor for proper connection.
- Repeat the test.
- Is any PCODE displayed?

Yes ↓

- Erase all inactive fault codes.
- Check sensor for proper connection.
- Repeat the test.
- Is any PCODE displayed?

No ↓

- Vehicle is OK.

Yes ←

- Erase all inactive fault codes.
- Check sensor for proper connection.
- Repeat the test.
- Is any PCODE displayed?

No ↓

- Check for short circuit between each pin and short to ground on ECM pins 69, 82, 84 and 58.
- Is measured value > 100 kΩ?

Yes ↓

No ↓

- Check direct positive voltage supply of ECM pins 1, 7, 12 and 13 (89 pins)
- Check direct negative voltage supply of ECM pins 3, 9, 14 and 15 (89 pins).
- Value must be 24VDC.
- Check for battery charging.
- Check battery cables for damaged insulation, improper connection or short o negative.
- Check terminals for contamination.
- Check alternator's voltage regulator. Replace it, if necessary.
- Check battery supply 20A fuses for burning.
- Repeat the test.
- Is any PCODE displayed?

Yes →

- Repair wiring harness.
- Repeat the test.

Cause
Low voltage on oil temperature sensor.

Details

A voltage low signal was detected (incompatible with signals from other sensors) coming from lubricating oil temperature sensor. There is possibly a biased of sensor's resistance or a short circuit to ground.

Strategy

Above 140 °C	Yellow light turns ON - Engine power is reduced by 20%.
ECM uses this signal for engine protection, avoiding degradation of lubricating oil.	

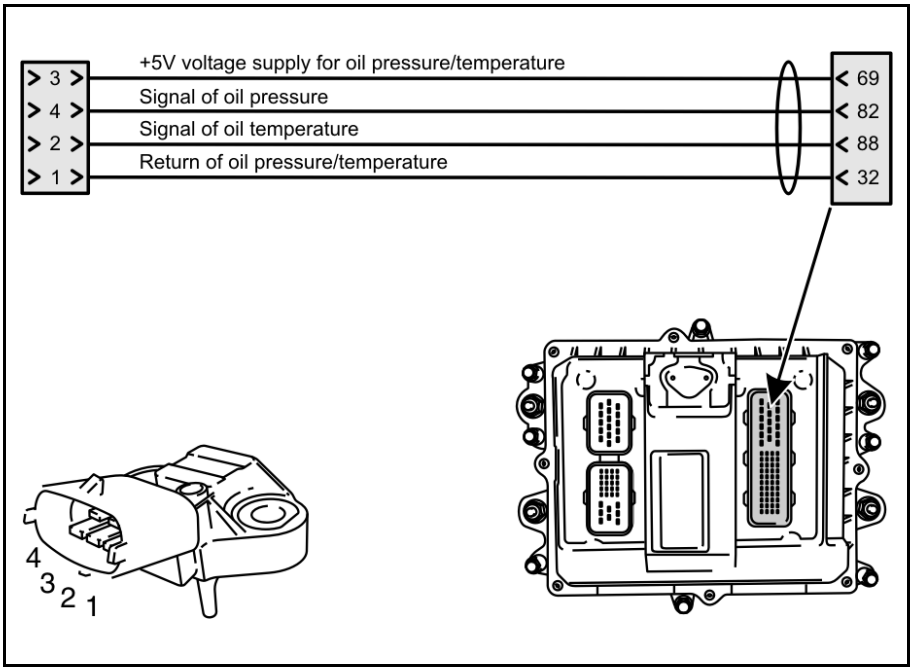

Troubleshooting Routine

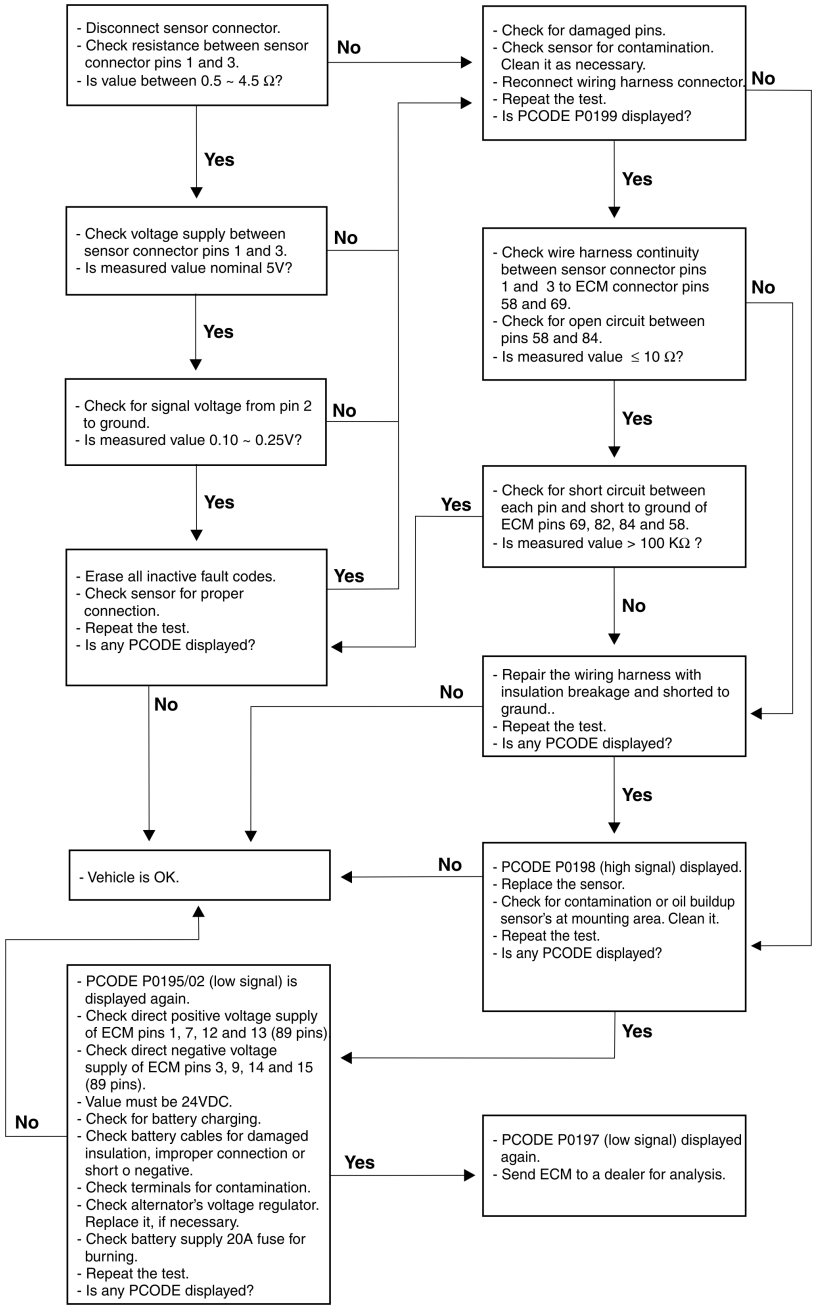

Cause
High voltage on oil temperature sensor.

Details

A voltage high signal was detected (incompatible with signals from other sensors) coming from lubricating oil temperature sensor. There is possibly a biased of sensor's resistance or a short circuit to positive battery voltage.

Strategy

Above 140 °C	Yellow light turns ON - Engine power is reduced by 20%
ECM uses this signal for engine protection, avoiding degradation of lubricating oil.	

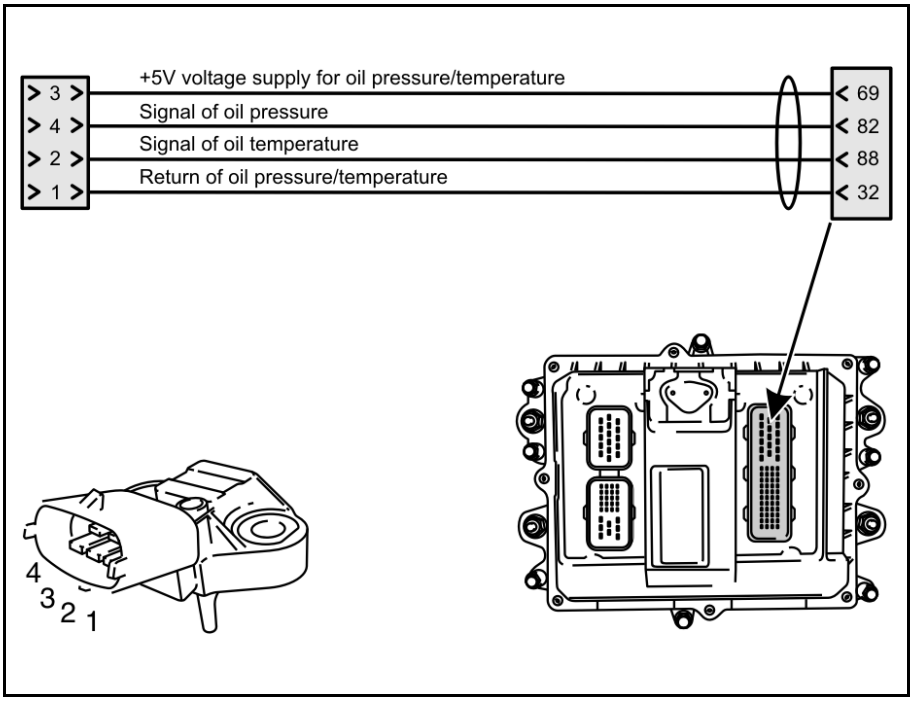

Troubleshooting Routine

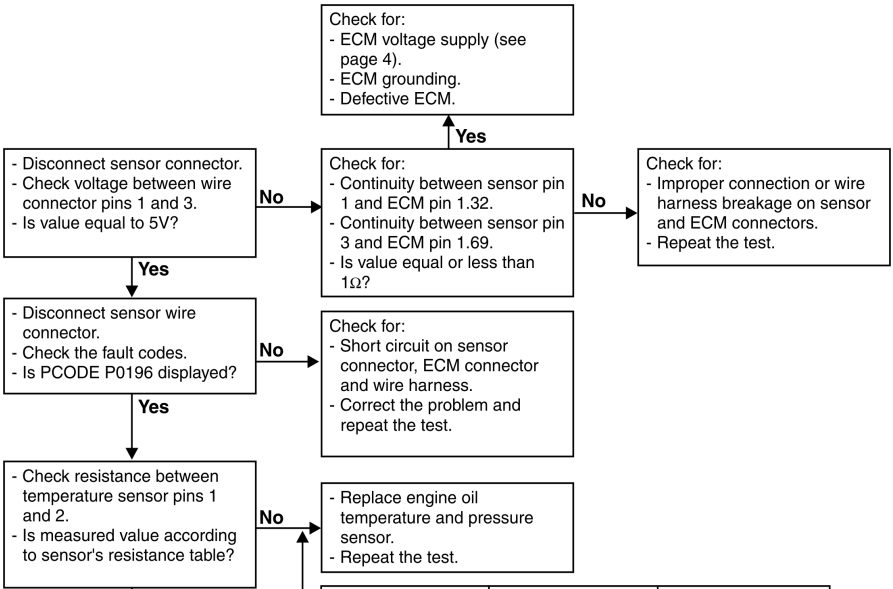

TEMPERATURE (C)	RESISTANCE (Ω)	VOLTAGE (V)
-20	14096 ~ 16827	4.17 ~ 4.71
-10	8642 ~ 10152	4.00 ~ 4.52
0	5466 ~ 6326	3.77 ~ 4.25
20	2351 ~ 2649	3.12 ~ 3.52
25	1941 ~ 2173	2.77 ~ 3.07
40	1118 ~ 1231	2.35 ~ 2.65
60	573 ~ 618	1.62 ~ 1.82
80	313 ~ 332	1.04 ~ 1.17
100	182 ~ 191	0.69 ~ 0.71
120	109 ~ 116	0.44 ~ 0.46
140	68 ~ 74	0.28 ~ 0.35

Cause
Missing signal from oil temperature sensor.

Details

Possibly the circuit or lubricating oil temperature sensor is in an open circuit condition, with no connection to ECM.
Create an inverse defect according to Troubleshooting Routine in order to locate the failure.

Strategy

Above 140 °C	Yellow light turns ON - Engine power is reduced by 20%
ECM uses this signal for engine protection, avoiding degradation of lubricating oil.	

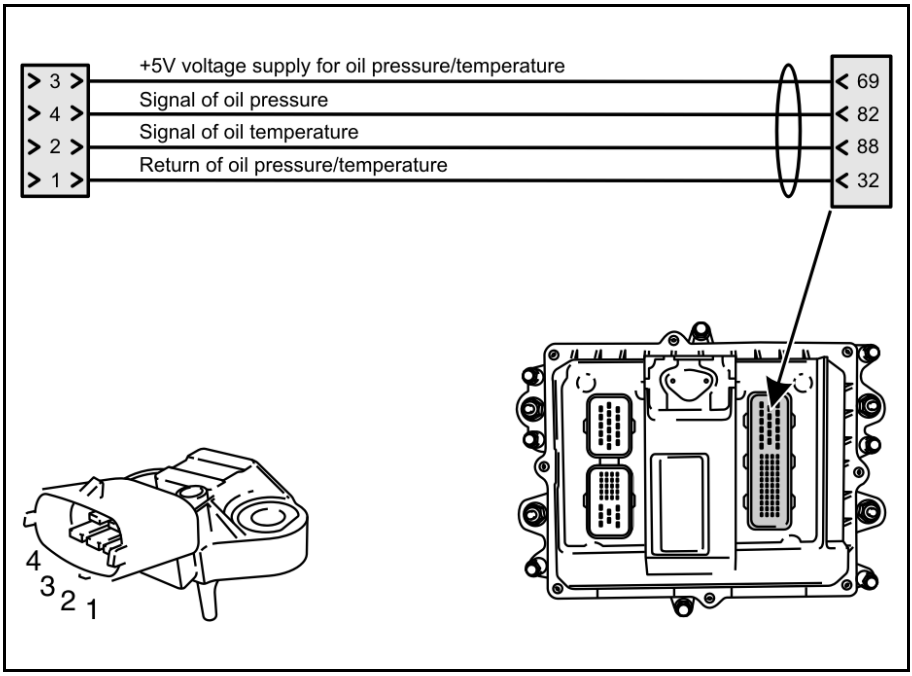

Troubleshooting Routine

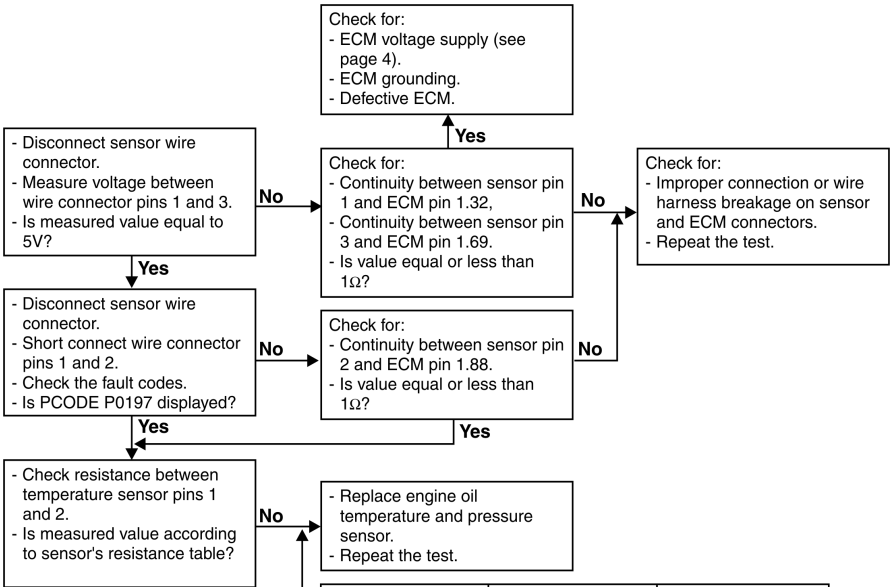

TEMPERATURE (C)	RESISTANCE (Ω)	VOLTAGE (V)
-20	14096 ~ 16827	4.17 ~ 4.71
-10	8642 ~ 10152	4.00 ~ 4.52
0	5466 ~ 6326	3.77 ~ 4.25
20	2351 ~ 2649	3.12 ~ 3.52
25	1941 ~ 2173	2.77 ~ 3.07
40	1118 ~ 1231	2.35 ~ 2.65
60	573 ~ 618	1.62 ~ 1.82
80	313 ~ 332	1.04 ~ 1.17
100	182 ~ 191	0.69 ~ 0.71
120	109 ~ 116	0.44 ~ 0.46
140	68 ~ 74	0.28 ~ 0.35

Cause
Injector #1 disconnected.

Details

Possibly the circuit or solenoid from fuel injector cylinder #1 is in an open circuit condition, with no connection to ECM.

Strategy

Failure on monitoring of injector	red light turns ON.
	engine power is reduced by 80%.

- ECM uses this signal to check injectors' activation

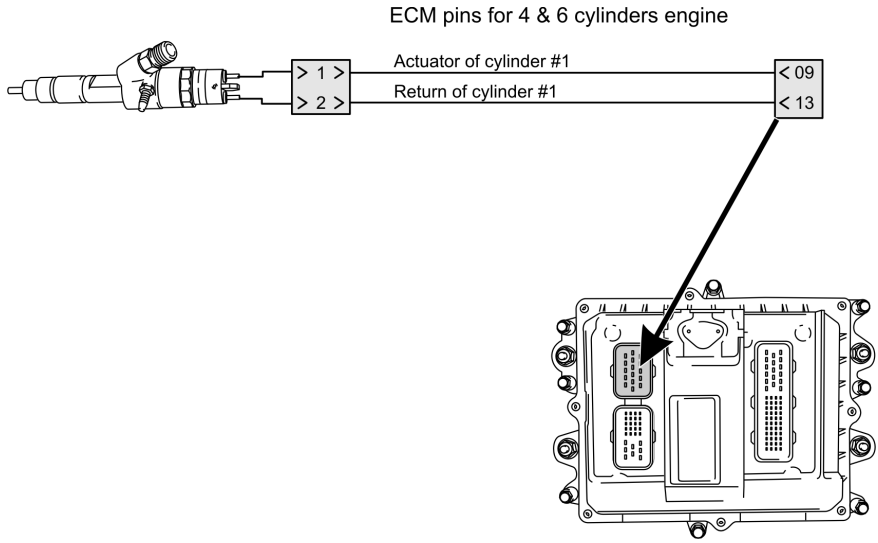

Troubleshooting Routine

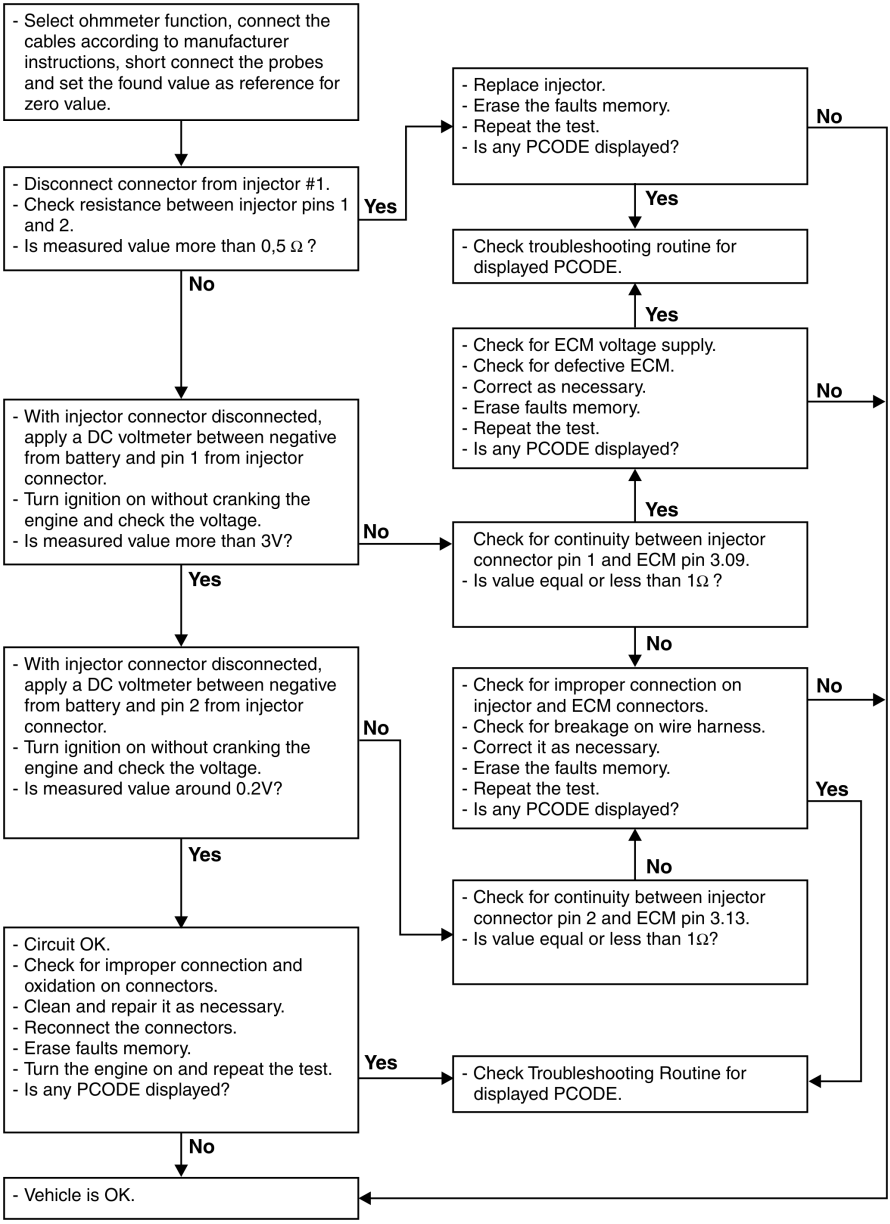

Cause
Injector #2 disconnected

Details

Possibly the circuit or solenoid from fuel injector #2 is in an open circuit condition, with no connection to ECM.

Strategy

Failure on monitoring of injector	red light turns ON.
	engine power is reduced by 80%.

- ECM uses this signal to check injectors' activation.

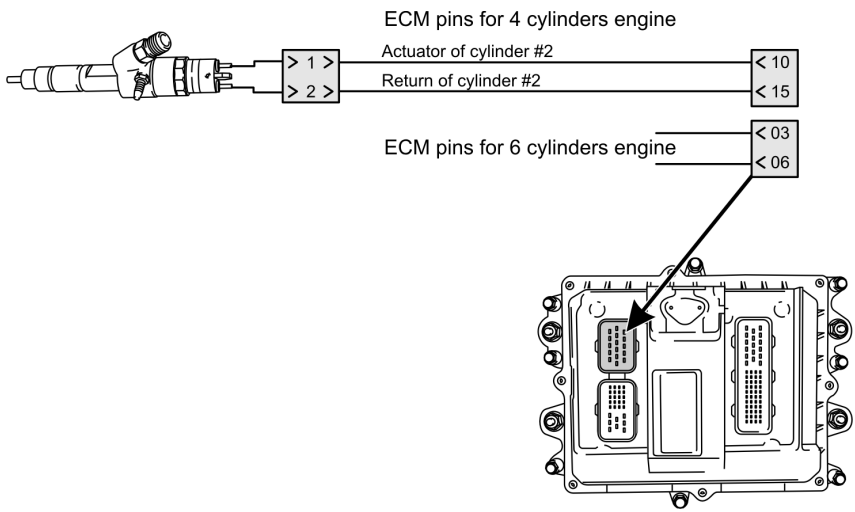

Troubleshooting Routine

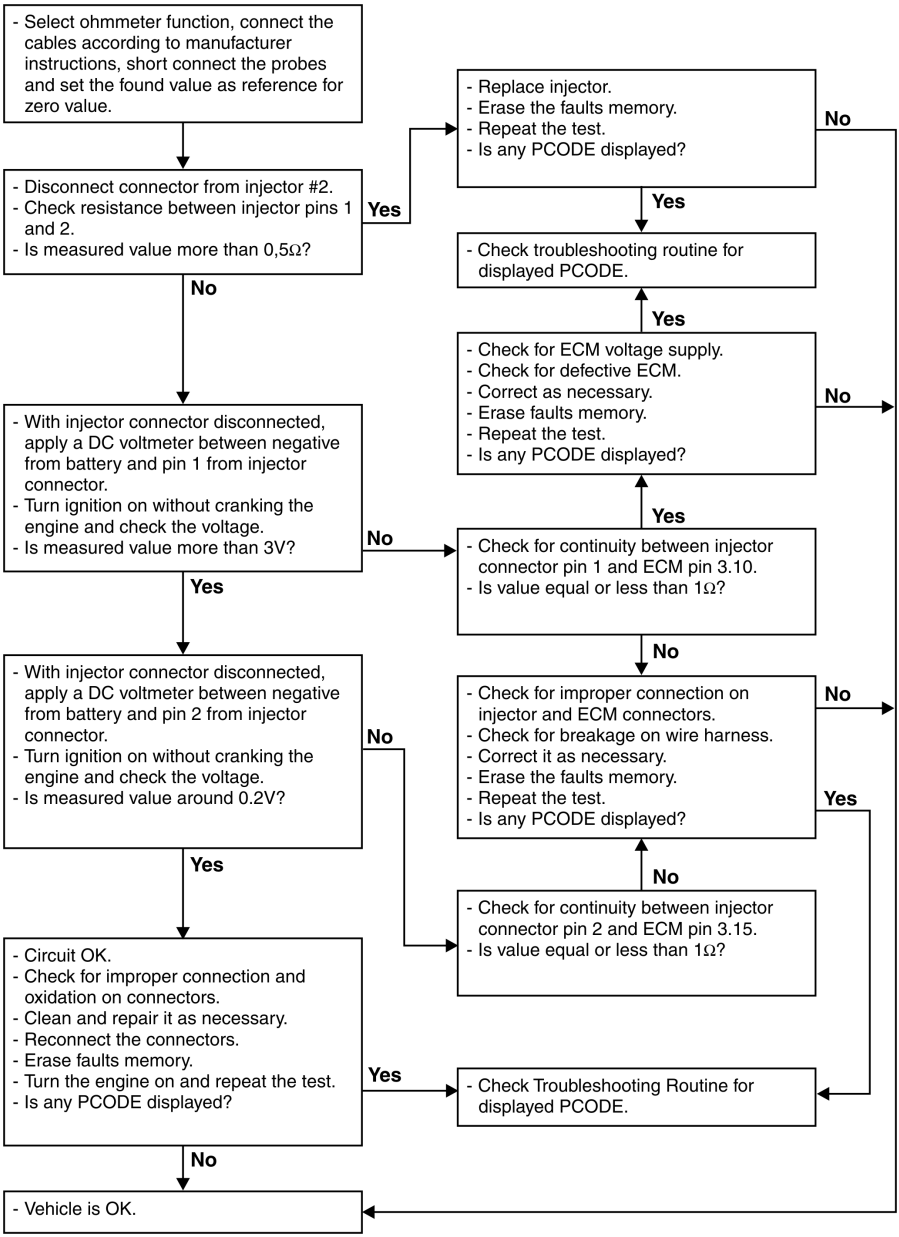

Cause
Injector #3 disconnected

Details

Possibly the circuit or solenoid from fuel injector #3 is in an open circuit condition, with no connection to ECM

Strategy

Failure on monitoring of injector	red light turns ON.
	engine power is reduced by 80%.

- ECM uses this signal to check injectors' activation.

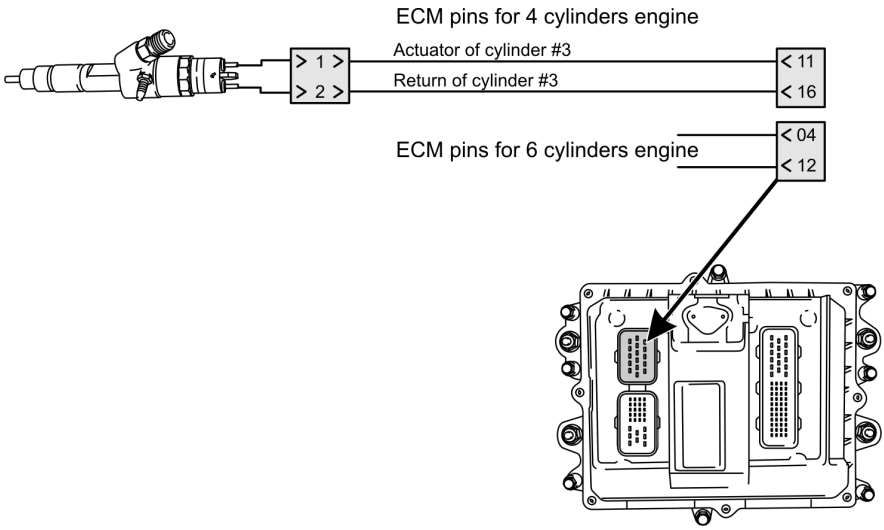

Troubleshooting Routine

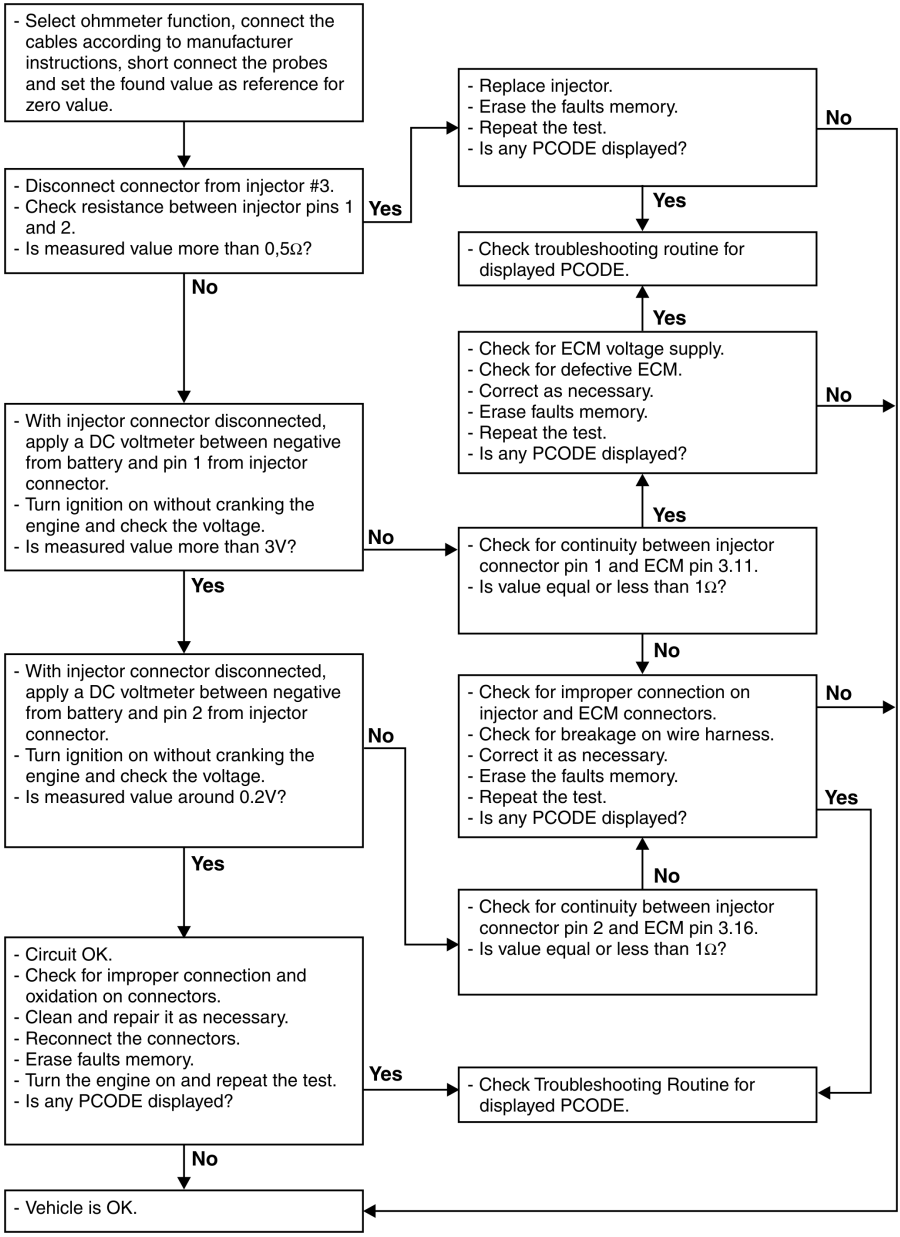

Cause
Injector #4 disconnected

Details

Possibly the circuit or solenoid from fuel injector #4 is in an open circuit condition, with no connection to ECM.

Strategy

Failure on monitoring of injector	red light turns ON.
	engine power is reduced by 80%.

- ECM uses this signal to check injectors' activation.

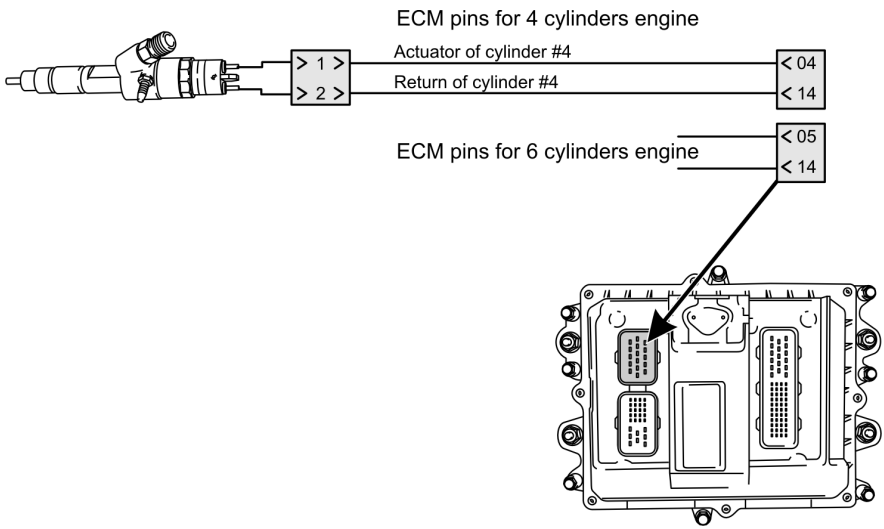

Troubleshooting Routine

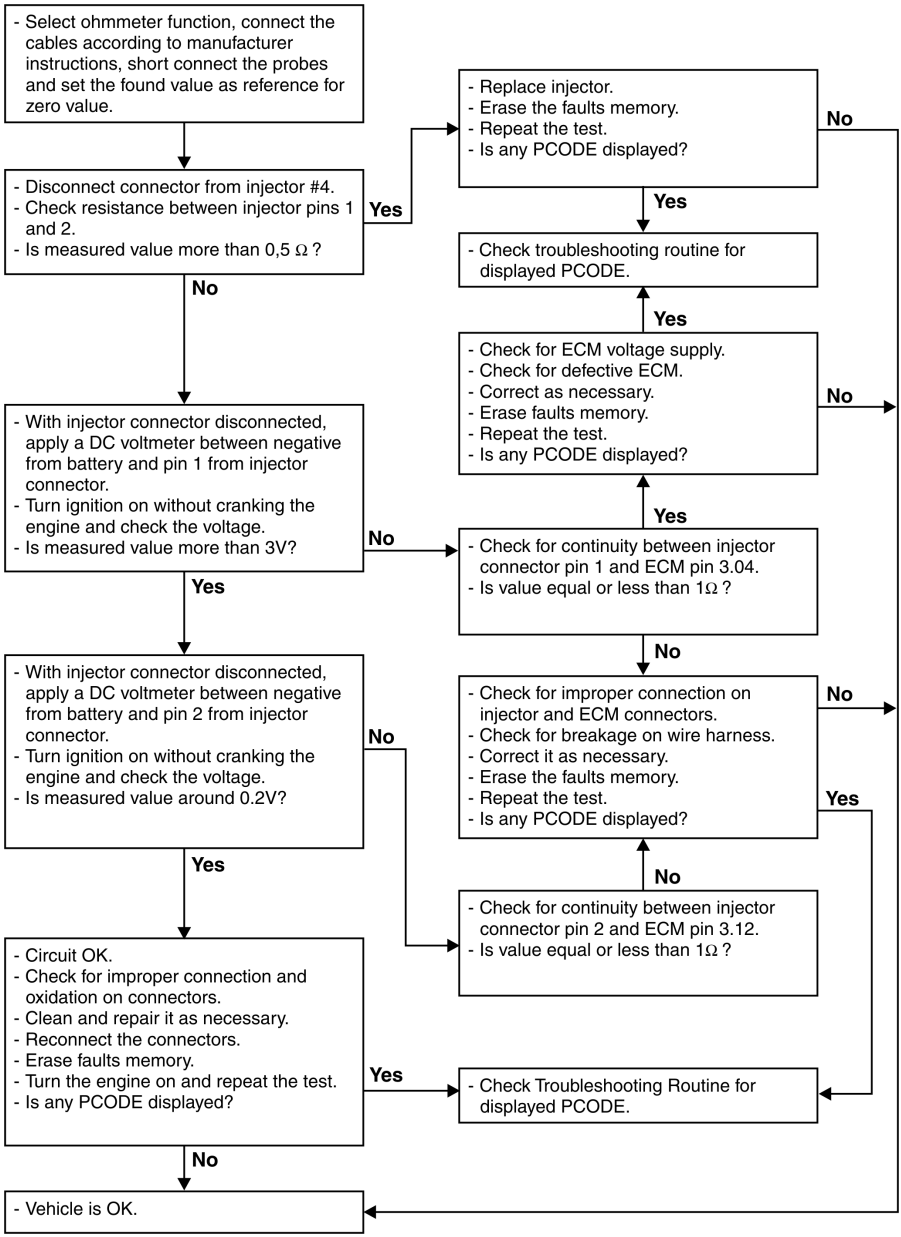

Cause
Injector #5 disconnected

Details

Possibly the circuit or solenoid from fuel injector #5 is in an open circuit condition, with no connection to ECM.

Strategy

Failure on monitoring of injector	red light turns ON.
	engine power is reduced by 80%

- ECM uses this signal to check injectors' activation

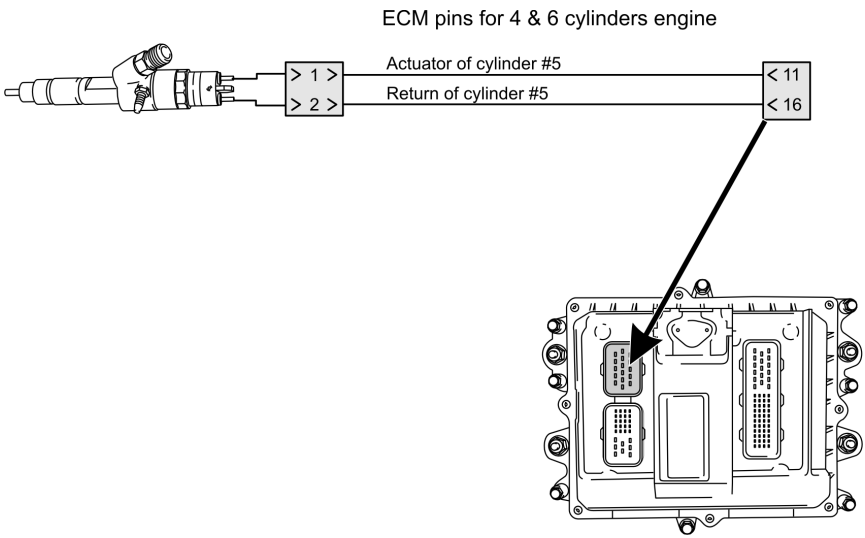

Troubleshooting Routine

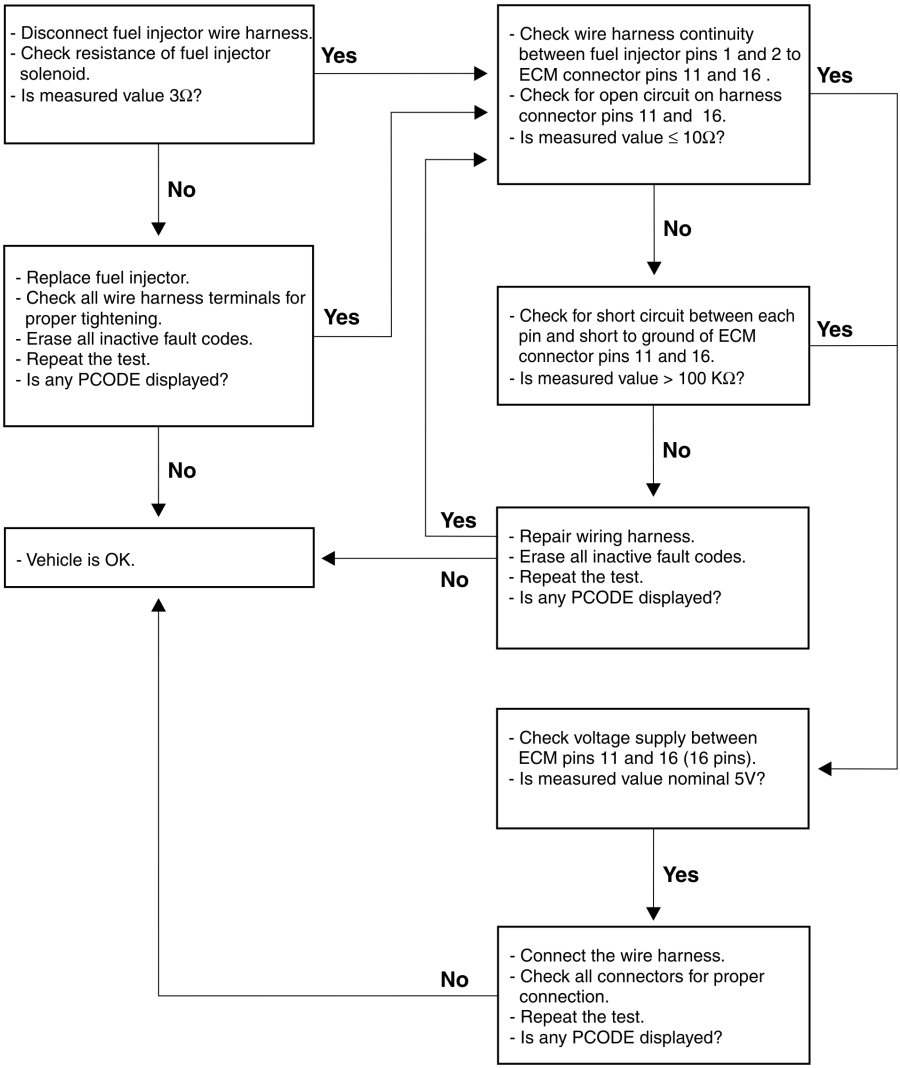

Cause
Injector #6 disconnected

Details

Possibly the circuit or solenoid from fuel injector #6 is in an open circuit condition, with no connection to ECM.

Strategy

Failure on monitoring of injector	Red light turns ON.
	Engine power is reduced by 80%.

- ECM uses this signal to check injectors' activation.

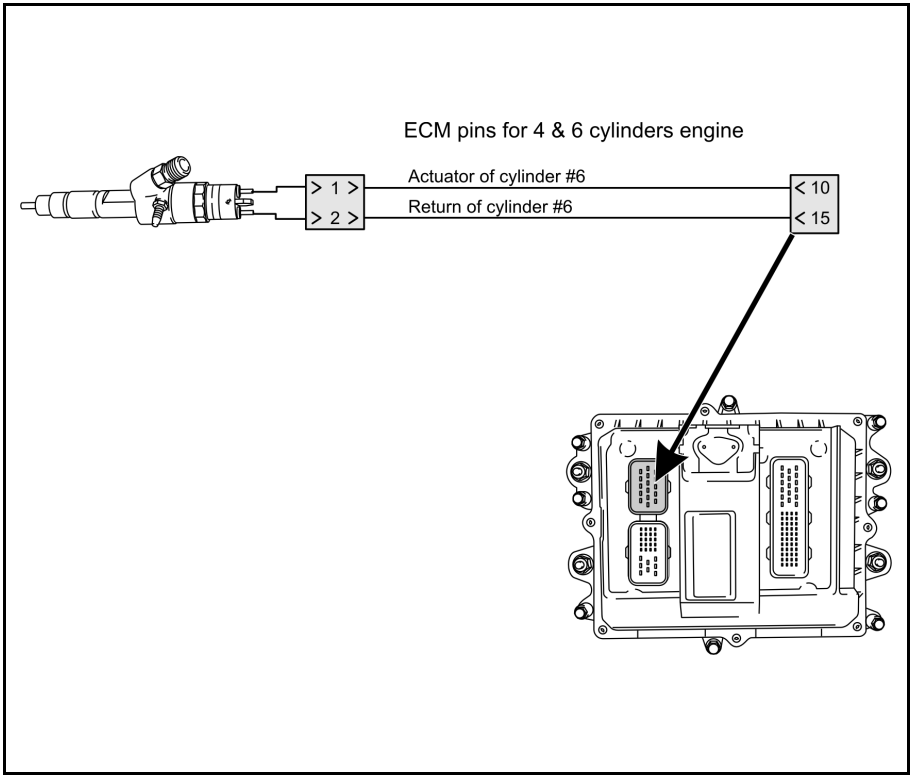

Troubleshooting Routine

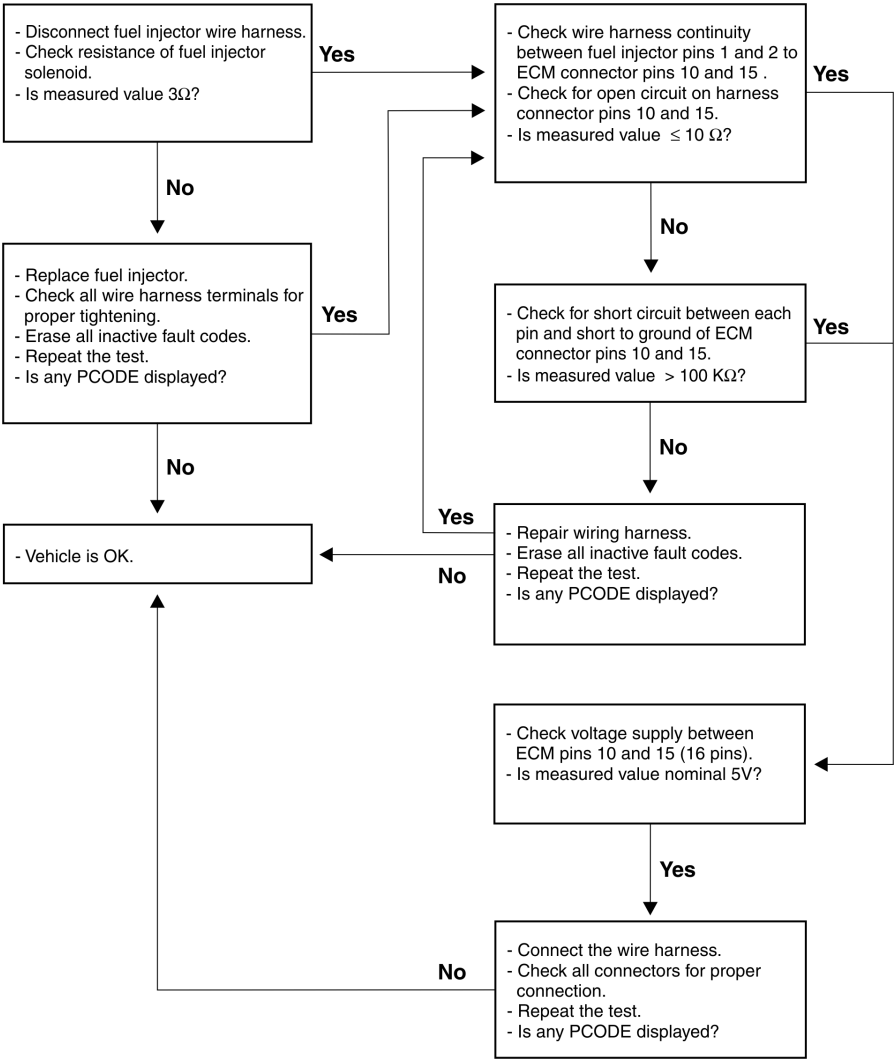

Cause
Intake air pressure above maximum limit.

Details

The pressure on intake manifold is above the value programmed for engine protection (300 kPa). Engine actual running conditions, reading error from sensor or a defective wire harness may have generated this code. Before starting the test, check sensor for contamination.
Check for any restriction on engine's intake. Check air filter element for clogging or dirty buildup. Clean or replace it as necessary.
Check engine's room for excessive temperature (above 93°C).

Strategy

Detection of defective sensor	Yellow light turns ON / Engine power is reduced by 20%.
	Above 3000 hPa, reduction of 50%.

ECM uses this signal to calculate the intake air mass and to define:

- Injection timing;
- Start of injection angle;
- As protection on emissions map.

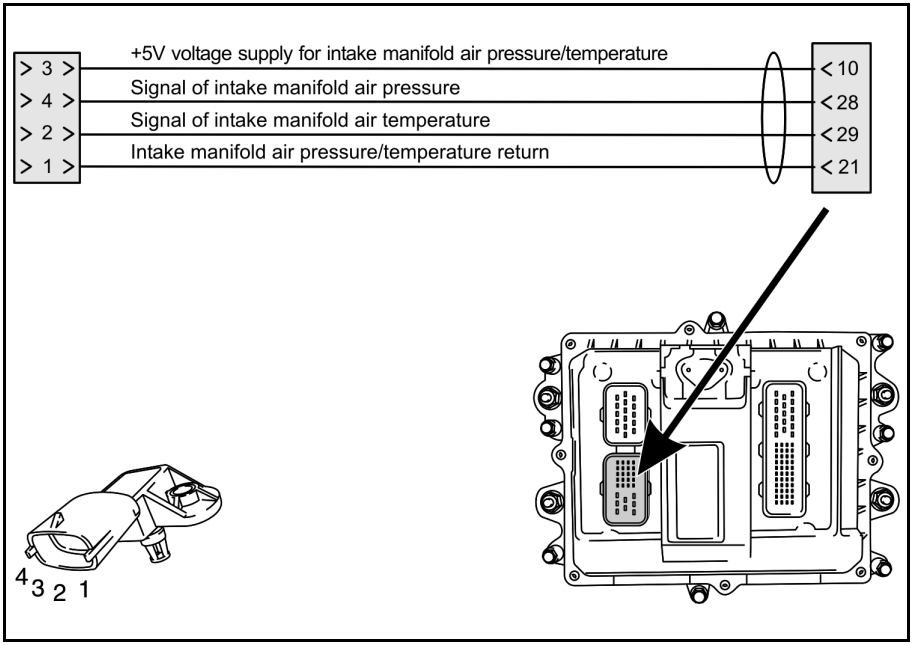

Troubleshooting Routine

kPa	Volts
25	0.39
50	0.77
75	1.15
100	1.53
125	1.91
150	2.3
175	2.67
200	3.05
225	3.43
250	3.81
275	4.19
300	4.65

- Are sensor values according to table?

No →

- Check for damaged pins.
- Remove sensor and check for contamination on sensor's temperature measuring area.
- Clean it as necessary.
- Connect sensor wiring.
- Repeat the test.
- Is PCODE P0236 (open circuit) displayed?

Yes →

- Replace the sensor.
- Check for contamination or oil buildup at sensor's mounting area. Clean it.
- Repeat the test.
- Is any PCODE displayed?

Yes → PCODE P0235 is displayed.

No →

- Vehicle OK.

Yes →

- Repeat the test with open circuit.
- Is PCODE P0236 (open circuit) displayed?

No → PCODE P0235 is displayed.

Yes →

- Erase all PCODEs on memory.
- Check sensor for correct connection.
- Repeat the test.
- Is any PCODE displayed?

Yes → PCODE P0235 is displayed.

No →

- Vehicle OK.

PCODE P0235 is displayed.

- Check wiring continuity between sensor connector pins 1 and 3 and ECM connector pins 10 and 29.
- Check for open circuit between pins 10 and 21.
- Is measured value < 10 Ω?

No →

- Check for short circuit between the pins and short to ground of ECM pins 10, 21, 28 and 29.
- Is measured value > 100 kΩ?

Yes → Check direct positive voltage supply of pins 1, 7, 12 and 13 on ECM connector (89 pins).

No → Check direct positive voltage supply of pins 1, 7, 12 and 13 on ECM connector (89 pins).

- Check direct positive voltage supply of pins 1, 7, 12 and 13 on ECM connector (89 pins).
- Check direct negative voltage supply of ECM pins 3, 9, 14 and 15.
- Value must be 24VDC.
- Check battery charging.
- Check battery cables for damaged insulation, improper connection or short o negative.
- Check terminals for contamination.
- Check alternator is voltage regulator. Replace it, if necessary.
- Check battery supply 20A fuse for burning.
- Repeat the test.
- Is any PCODE displayed?

Yes →

- Repair wiring harness.
- Repeat the test.

Cause
Voltage supply low on intake air pressure sensor

Details

Possibly the circuit or intake air pressure sensor is in an open circuit condition, with no connection to ECM. The wire harness connector may cause this failure if it is disconnected or improperly connected. Check for voltage supply on sensor pins 1 and 3 (4.75 ~ 5.25 V) and voltage supply on ECM pins 10 and 29 (4.75 ~ 5.25 V).
Check for voltage supply on vehicle sensor wire harness (89 pins connector) on ECM (pins 10 and 29).
Create an inverse defect according to Troubleshooting Routine in order to locate the failure.

Strategy

Detection of defective sensor	Yellow light turns ON / Engine power is reduced by 20%.
	Above 3000 hPa, reduction of 50%.

ECM uses this signal to calculate the intake air mass and to define:

- Injection timing;
- Start of injection angle;
- As protection on emissions map.

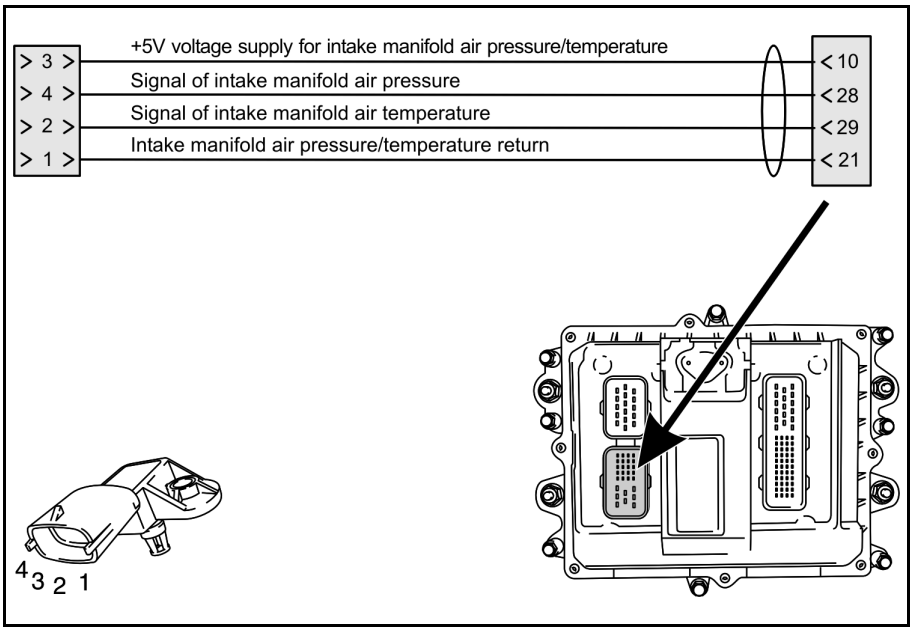

Troubleshooting Routine

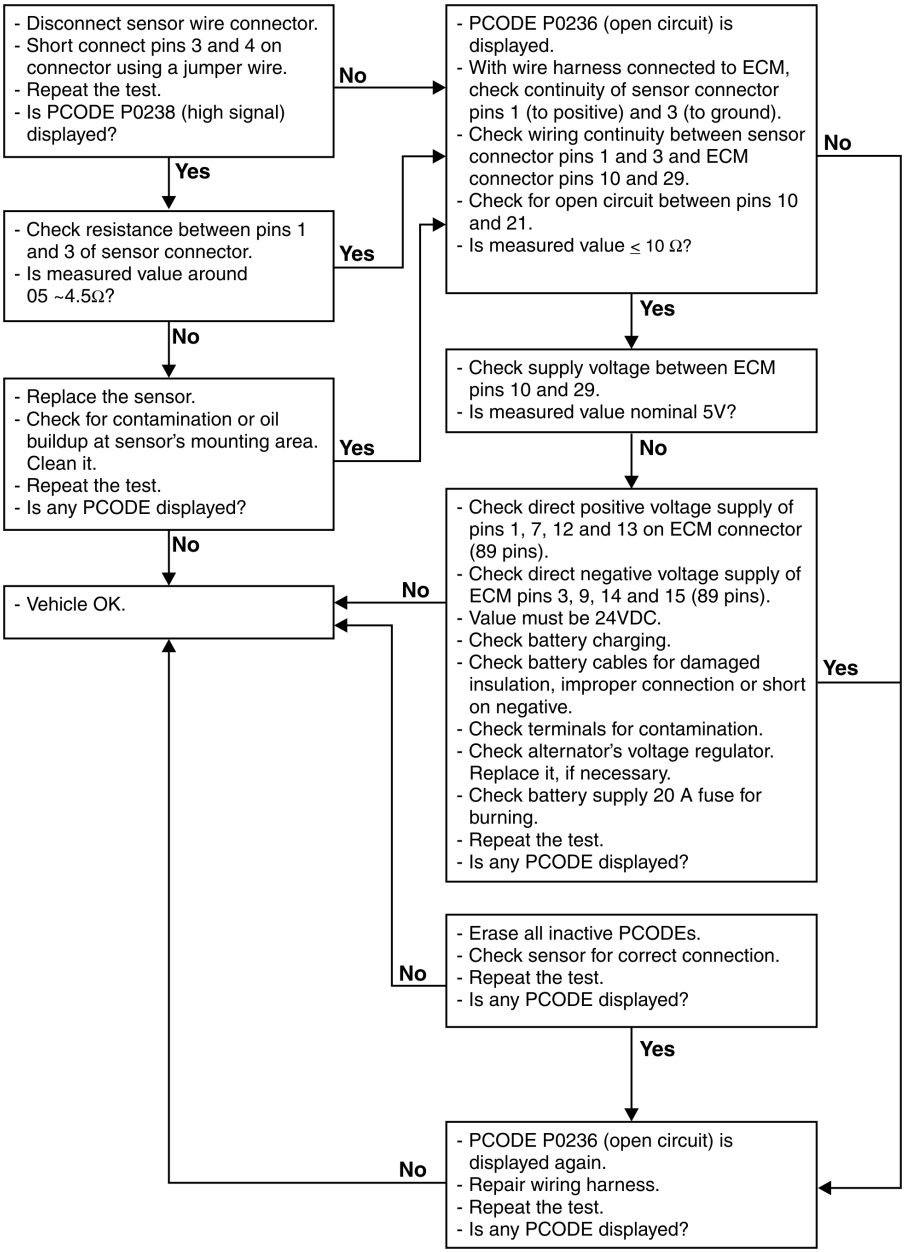

Cause
Low voltage on intake air pressure sensor

Details

A voltage low signal was detected (incompatible with signals from other sensors) coming from intake air pressure sensor. There is possibly a biased of sensor's resistance or a short circuit on wire harness. Check sensor wire harness for damage. Check for voltage supply on sensor pins 1 and 3 (4.75 ~ 5.25 V).
Check for voltage supply of sensor on ECM pins 10 and 29 (4.75 ~ 5.25 V).
Measure the voltage on signal pin 2 (0.10 ~ 0.25 V). Erase all active fault codes and proceed according to troubleshooting routine.

Strategy

Detection of defective sensor	Yellow light turns ON / Engine power is reduced by 20%
	Above 3000 hPa, reduction of 50%

ECM uses this signal to calculate the intake air mass and to define:

- Injection timing;
- Start of injection angle;
- As protection on emissions map.

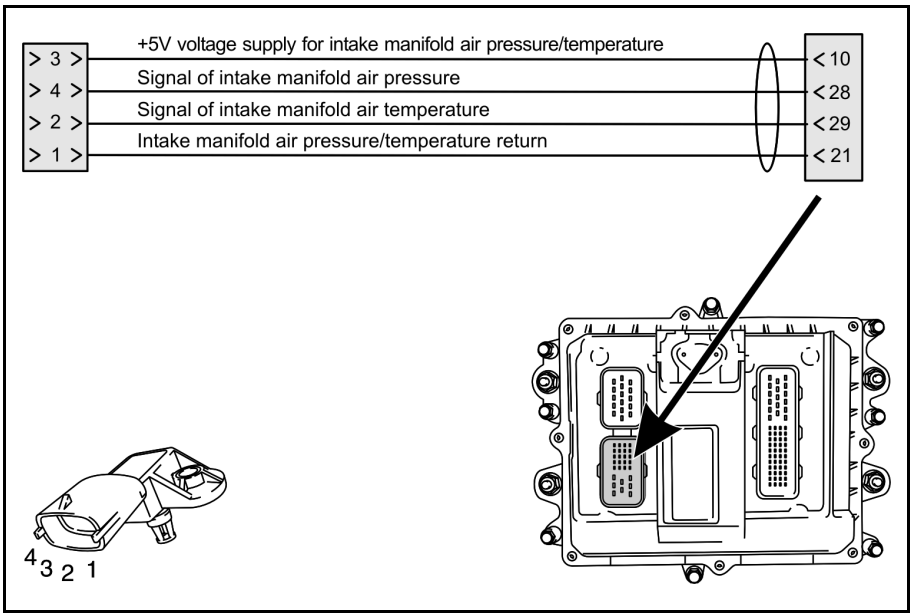

Troubleshooting Routine

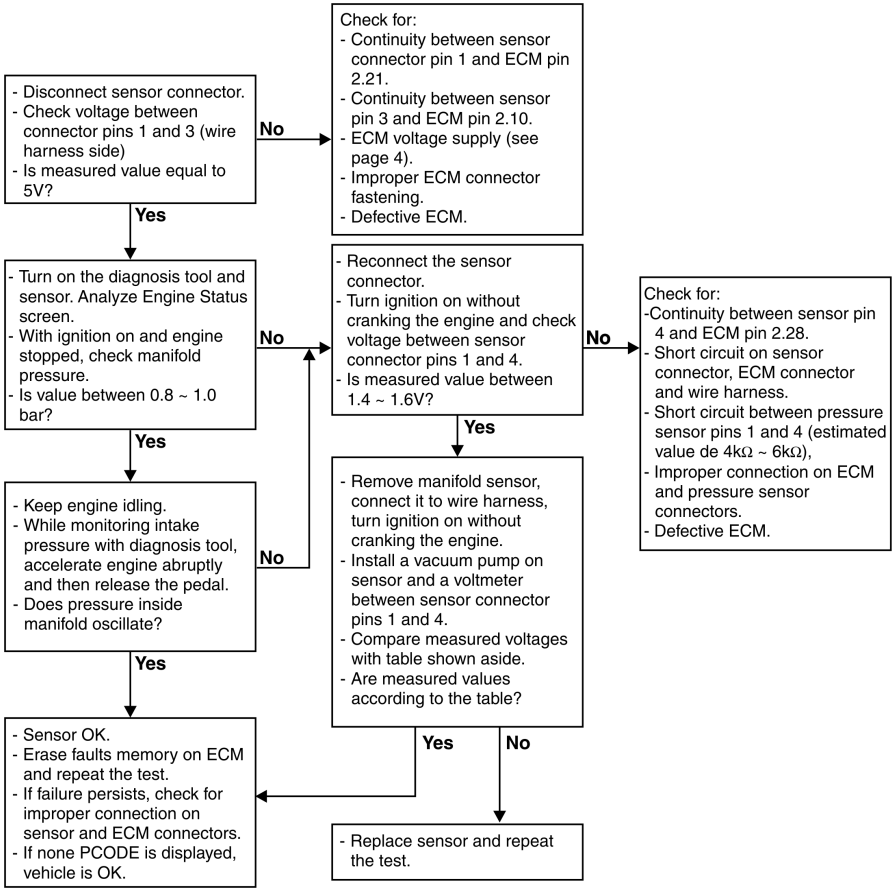

Cause
High voltage on intake air pressure sensor.

Details

A voltage high signal was detected (incompatible with signals from other sensors) coming from intake air pressure sensor. There is possibly a biased of sensor's resistance or a short circuit on wire harness. Check sensor wire harness for damage. Check for voltage supply between pins 1 and 3 of sensor (4.75 ~ 5.25 V).
Check for signal voltage on sensor pin 2 (0.10 ~ 0.25 V). Check ECM for voltage supply on pins 10, 24 and 29 (4.75 ~ 5.25 V) and measure signal voltage between negative terminal on battery and ECM pin 21 (0.10 ~ 0.25 V). Erase all active fault codes and proceed according to troubleshooting routine.

Strategy

Detection of defective sensor	Yellow light turns ON / Engine power is reduced by 20%.
	Above 3000 hPa, reduction of 50%.

ECM uses this signal to calculate the intake air mass and to define:

- Injection timing;
- Start of injection angle;
- As protection on emissions map.

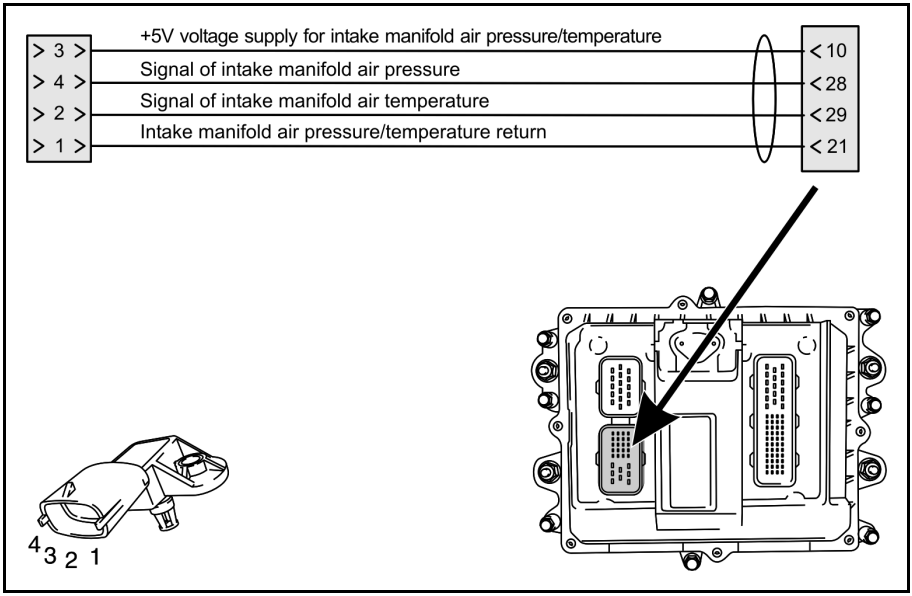

Troubleshooting Routine

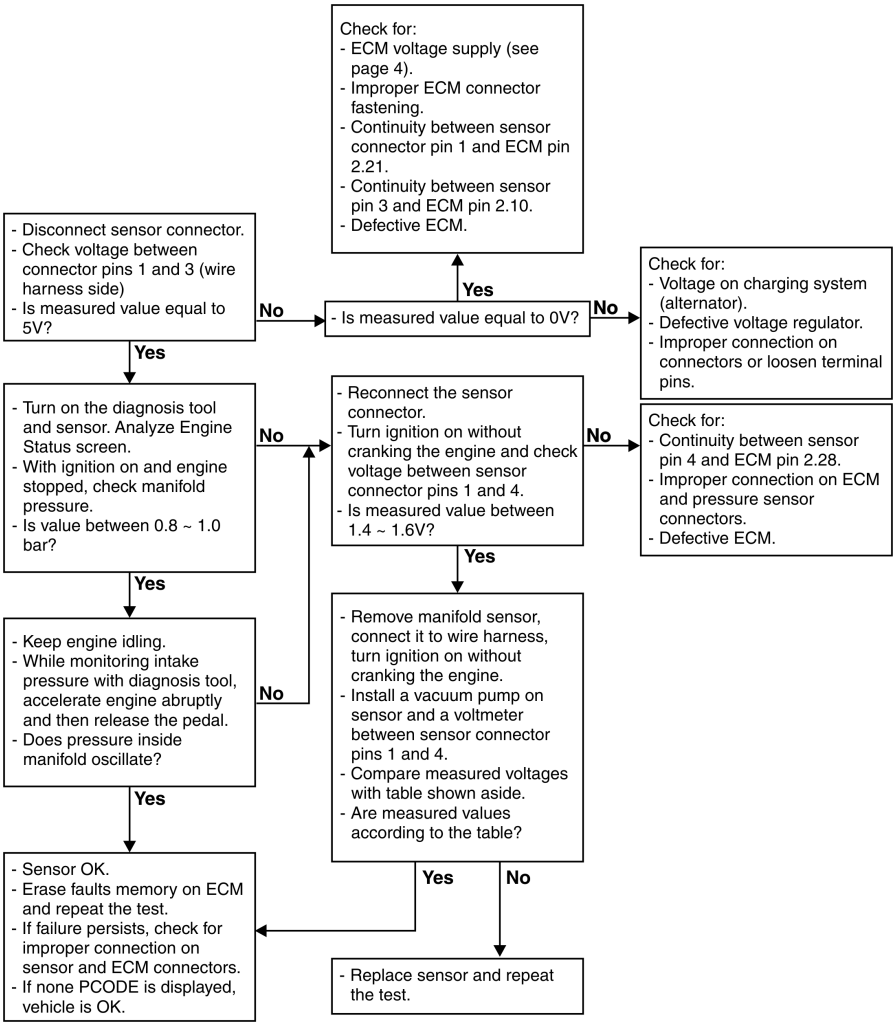

Cause
Short circuit to ground on injector #1.

Details

A voltage low signal was detected coming from solenoid of injector on cylinder #1.
There is possibly an alteration of coil's resistance or a short circuit on wire harness.

Strategy

Failure on monitoring of injector	red light turns ON.
	engine power is reduced by 80%.

- ECM uses this signal to check injectors' activation.

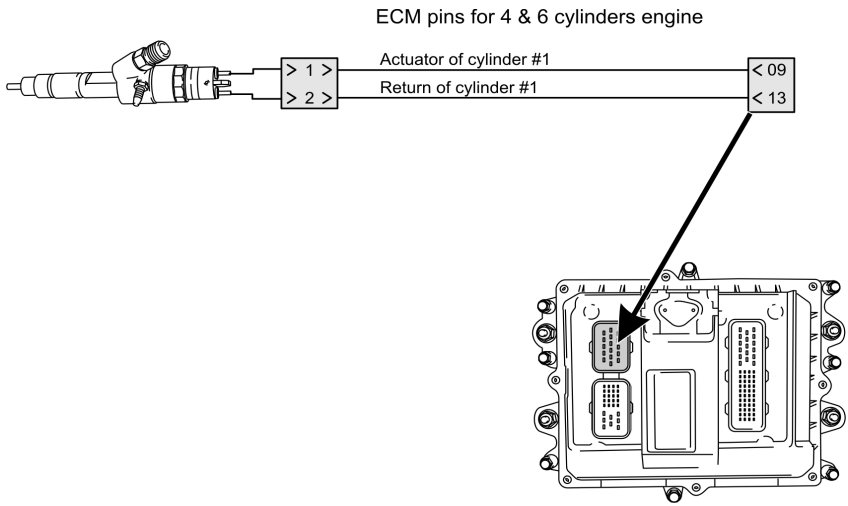

Troubleshooting Routine

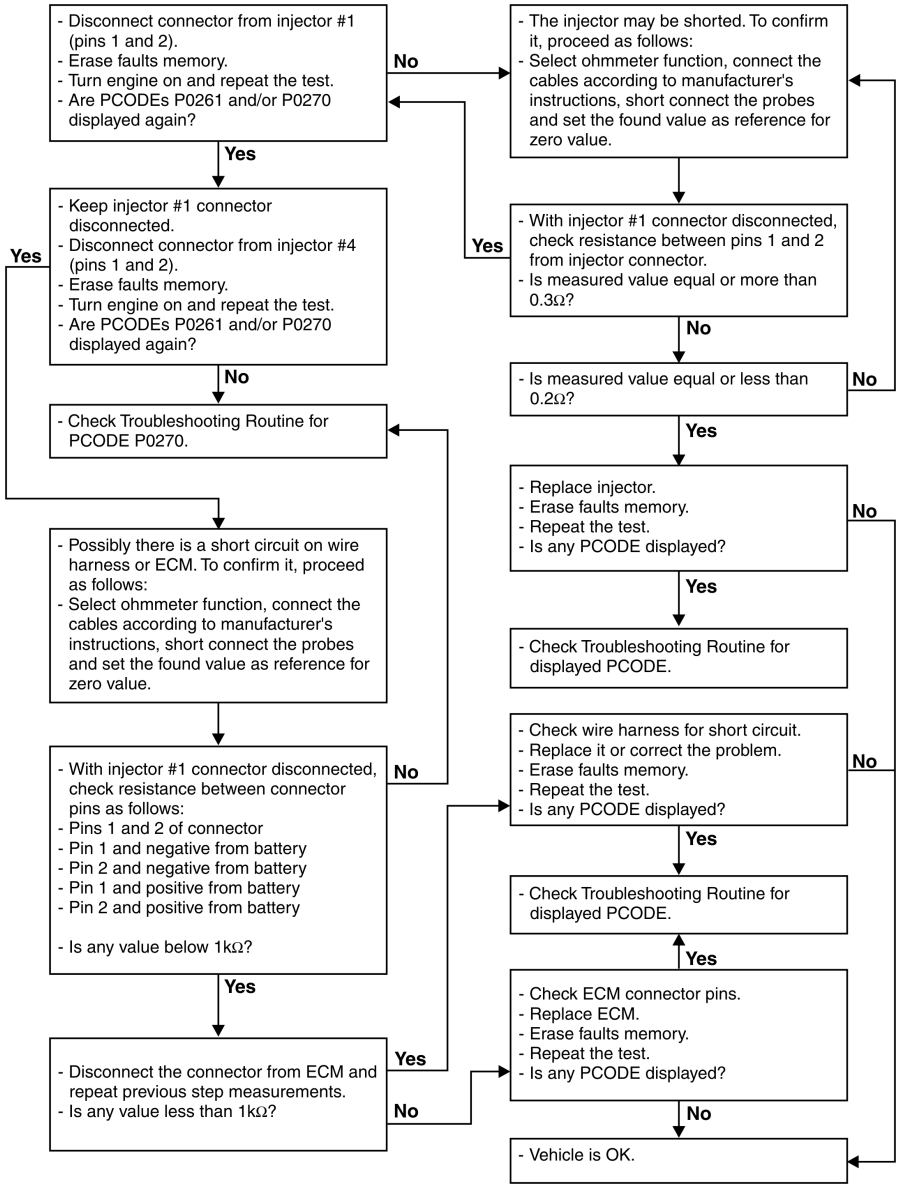

Cause
Short circuit to battery voltage on injector #1.

Details

A voltage high signal was detected coming from solenoid of injector on cylinder #1. There is possibly an alteration of coil's resistance or a short circuit on wire harness.

Strategy

Failure on monitoring of injector	red light turns ON.
	engine power is reduced by 80%.

- ECM uses this signal to check injectors' activation.

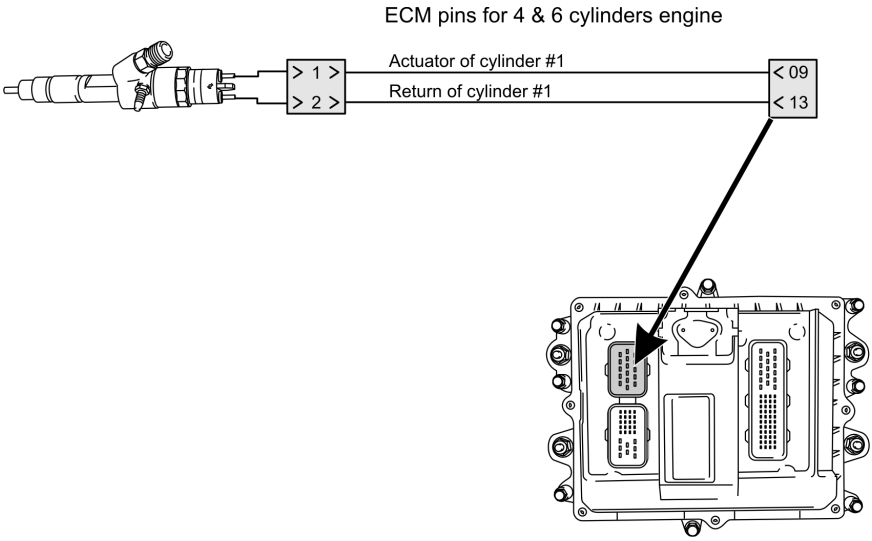

Troubleshooting Routine

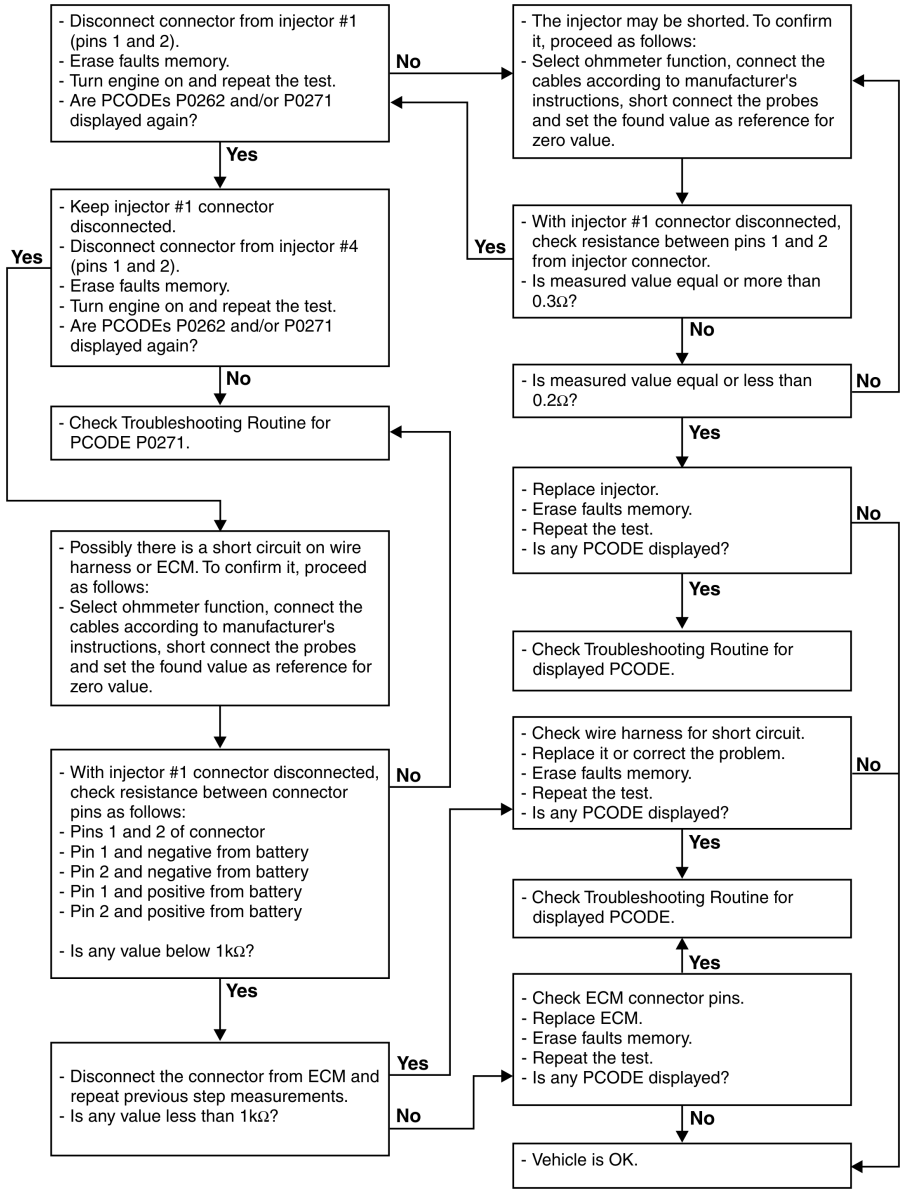

Cause
Voltage low signal on solenoid of injector #2

Details

A voltage low signal was detected coming from solenoid of injector on cylinder #2. There is possibly an alteration of coil's resistance or a short circuit on wire harness.

Strategy

Failure on monitoring of injector	Red light turns ON.
	Engine power is reduced by 80%.

- ECM uses this signal to check injectors' activation.

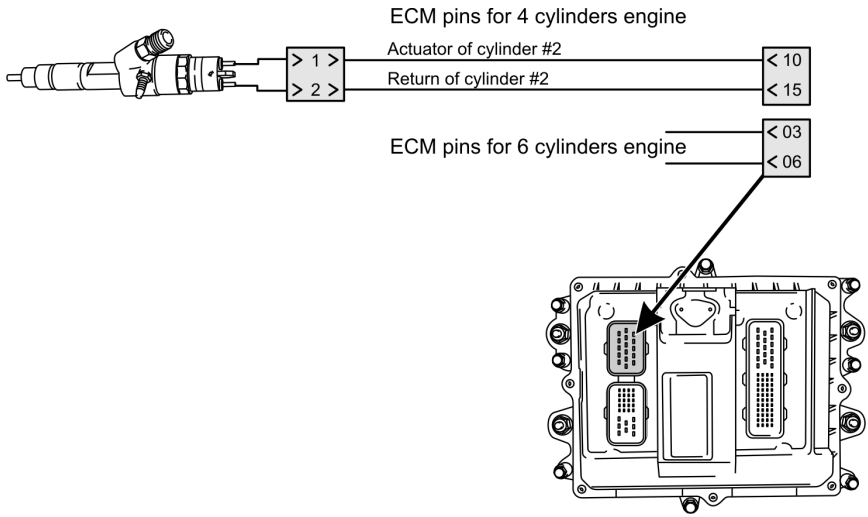
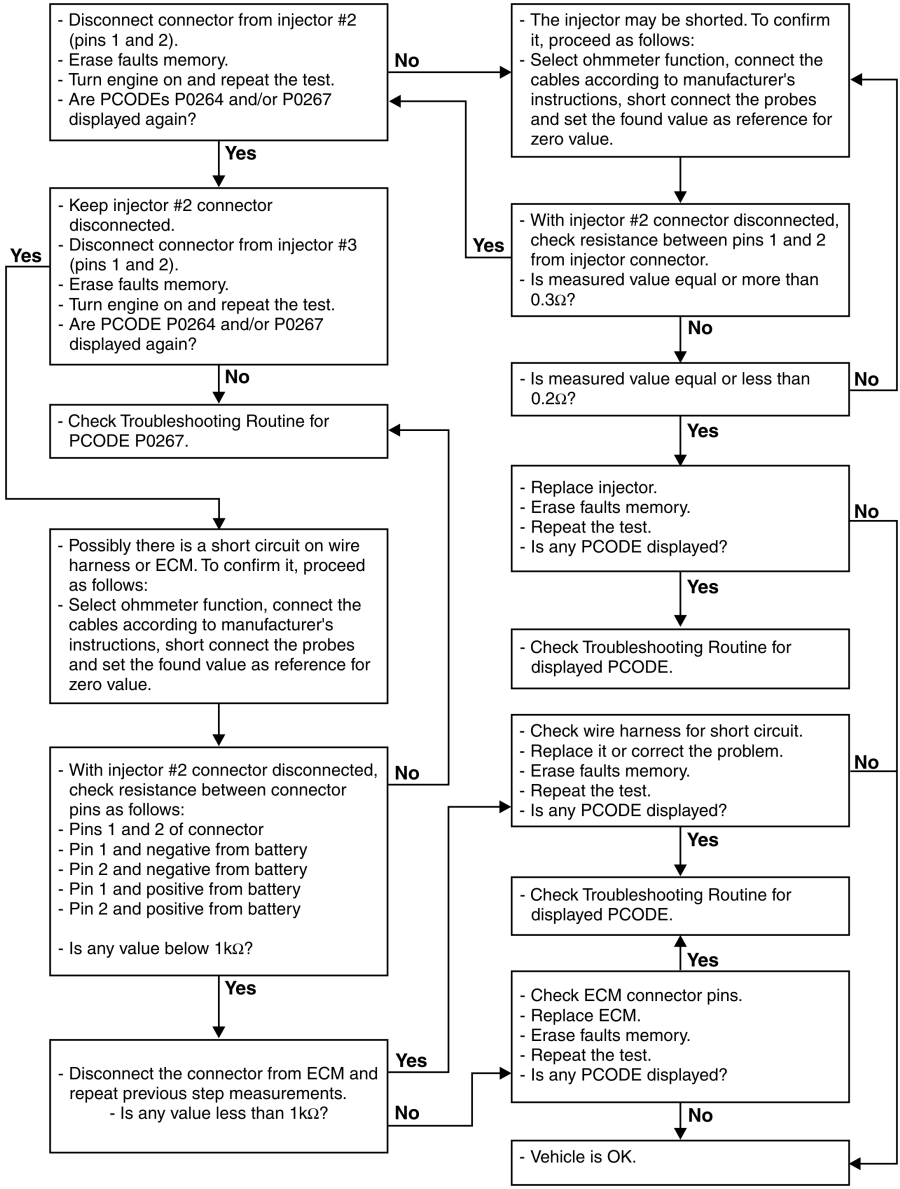
Troubleshooting Routine