Cause
High voltage on oil pressure sensor.

Details

A voltage high signal was detected (incompatible with signals from other sensors) coming from lubricating oil pressure sensor. There is possibly a biased of sensor's resistance or a short circuit on wire harness.

Strategy

Detection of defective sensor	Yellow light turns ON.
	Engine stop - below 0.5 bar.

- ECM uses this signal for engine protection.

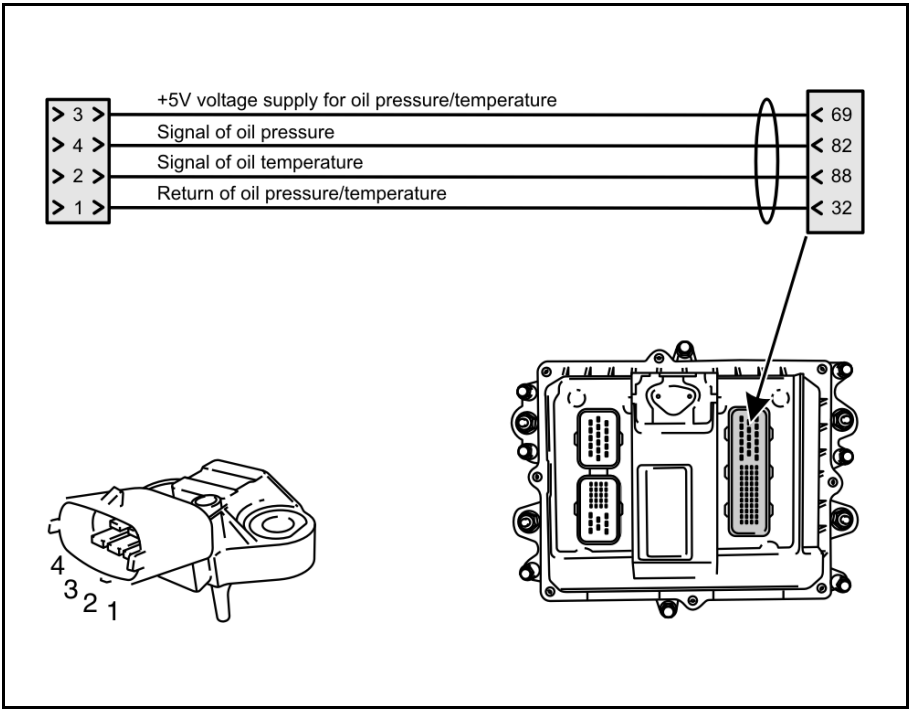

Troubleshooting Routine

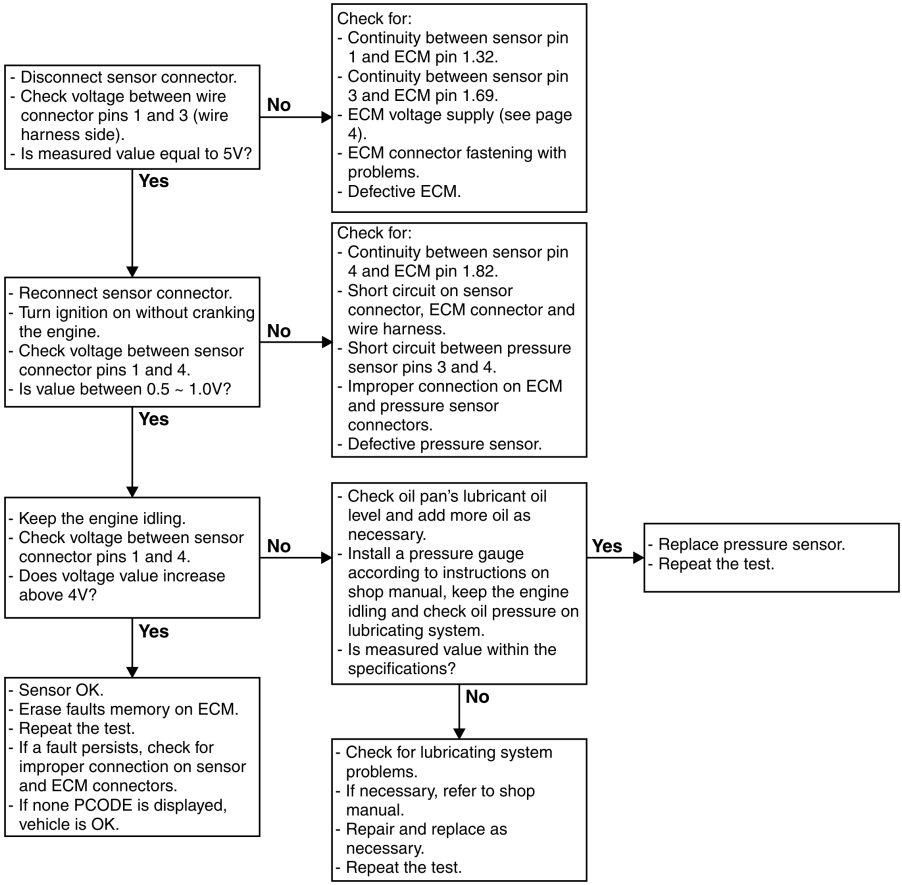

Cause
Oil pressure below minimum engine protection limit.

Details

The lubricating oil pressure is below programmed value for engine protection (80 kPa). Engine actual running conditions, reading error from sensor or a defective wire harness may have generated this code.
Before starting the test, check sensor for oil impregnation signs, lubricating oil filter conditions and oil level in oil pan.

Strategy

Detection of defective sensor	Yellow light turns ON.
	Engine stop - below 0.5 bar.

- ECM uses this signal for engine protection.

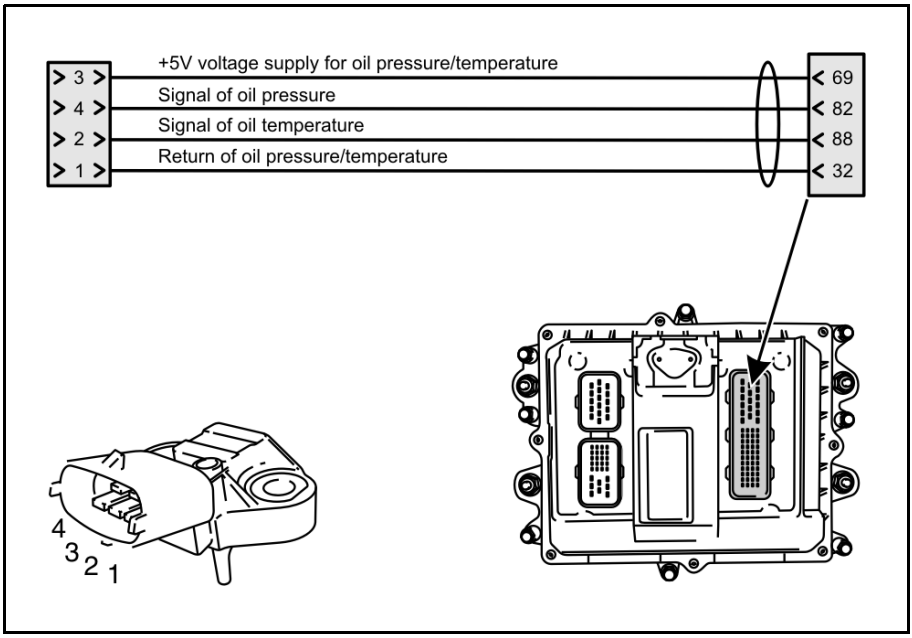

Troubleshooting Routine

kPa	Volts
25	0.32 (± 2%)
50	0.50 (± 2%)
75	0.68 (± 2%)
100	0.86 (± 2%)
125	1.45 (± 2%)
150	1.23 (± 2%)
175	1.41 (± 2%)
200	1.59 (± 2%)
250	1.95 (± 2%)
300	2.32 (± 2%)
350	1.68 (± 2%)
400	3.05 (± 2%)
450	3.41 (± 2%)
500	3.77 (± 2%)
550	4.13 (± 2%)
600	4.50 (± 2%)
650	4.86 (± 2%)

- Is sensor according to table?

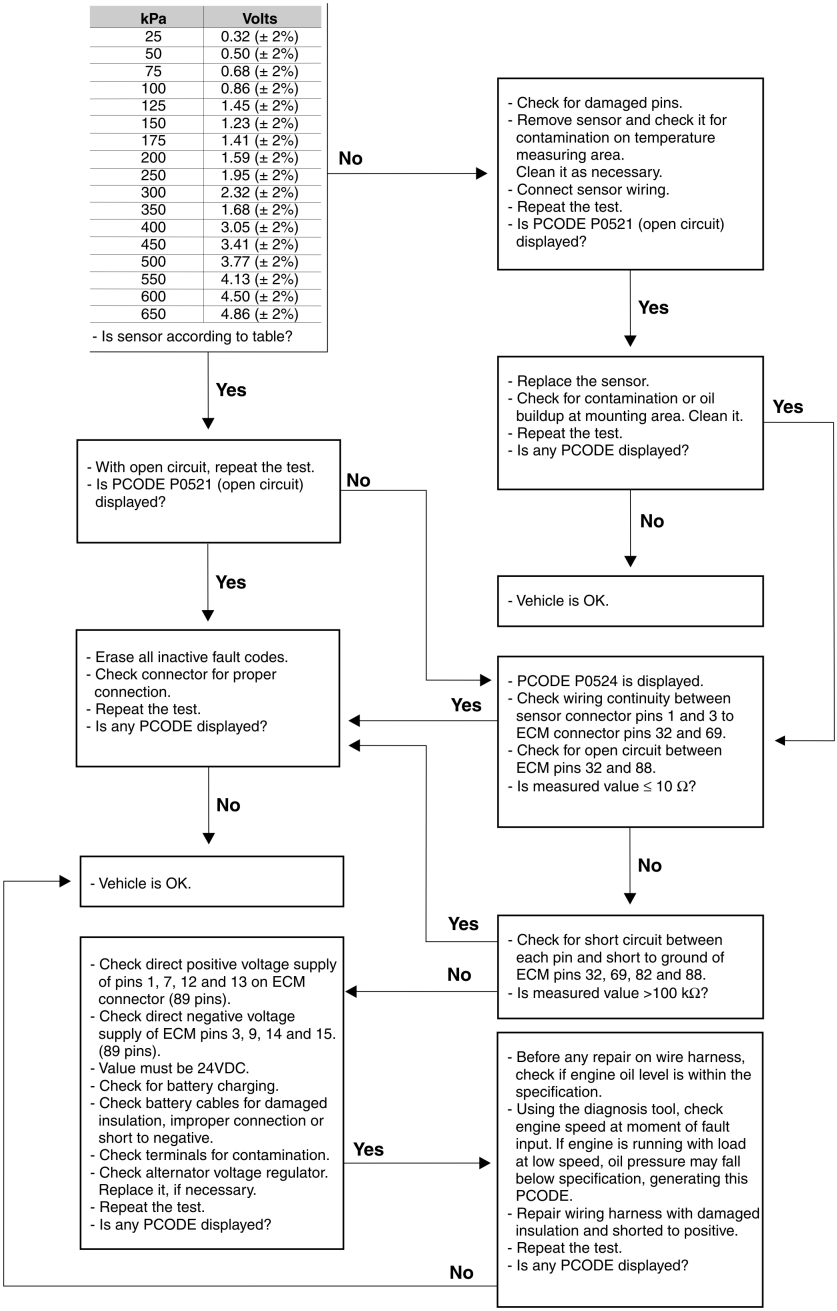

Cause
Voltage supply below system's minimum allowable.

Detalhamento

An ECM voltage supply inferior to 8,5 volts was detected.

Estratégia

Check ECM voltage supply before diagnosing a high or low voltage.
• This signal is used for monitoring of ECM voltage supply.

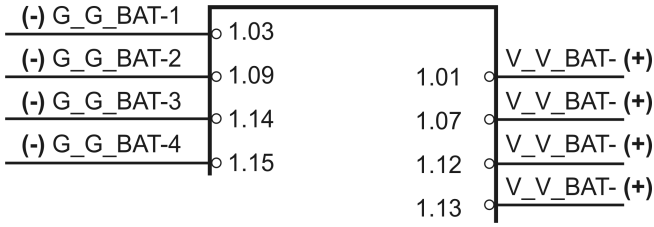

Troubleshooting Routine

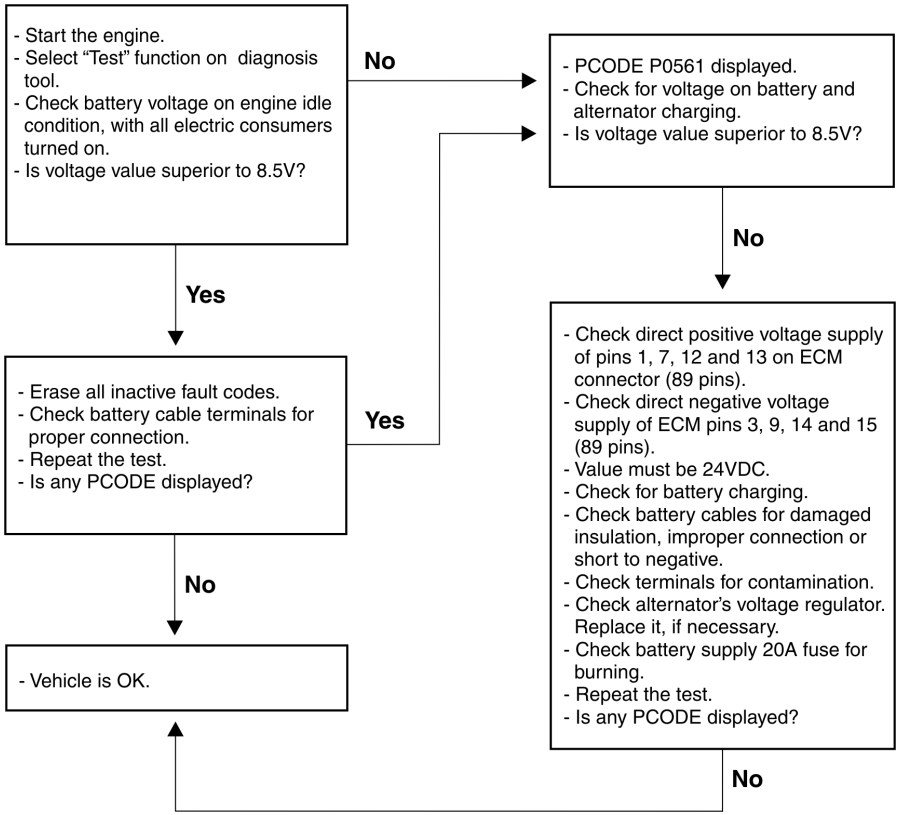

Cause
Voltage supply above system's maximum allowable.

Details

An ECM voltage supply superior to 16 VDC (for 12VDC system), or superior to 27 VDC (for 24 VDC system), was detected.

Strategy

Check ECM voltage supply before diagnosing a high or low voltage.
• This signal is used for monitoring of ECM voltage supply.

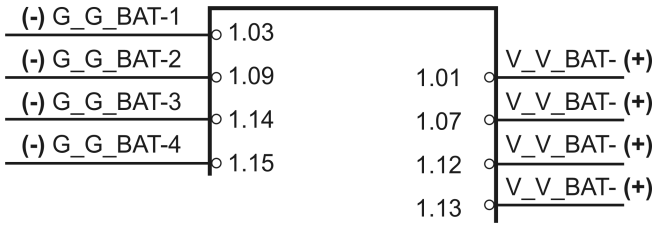

Troubleshooting Routine

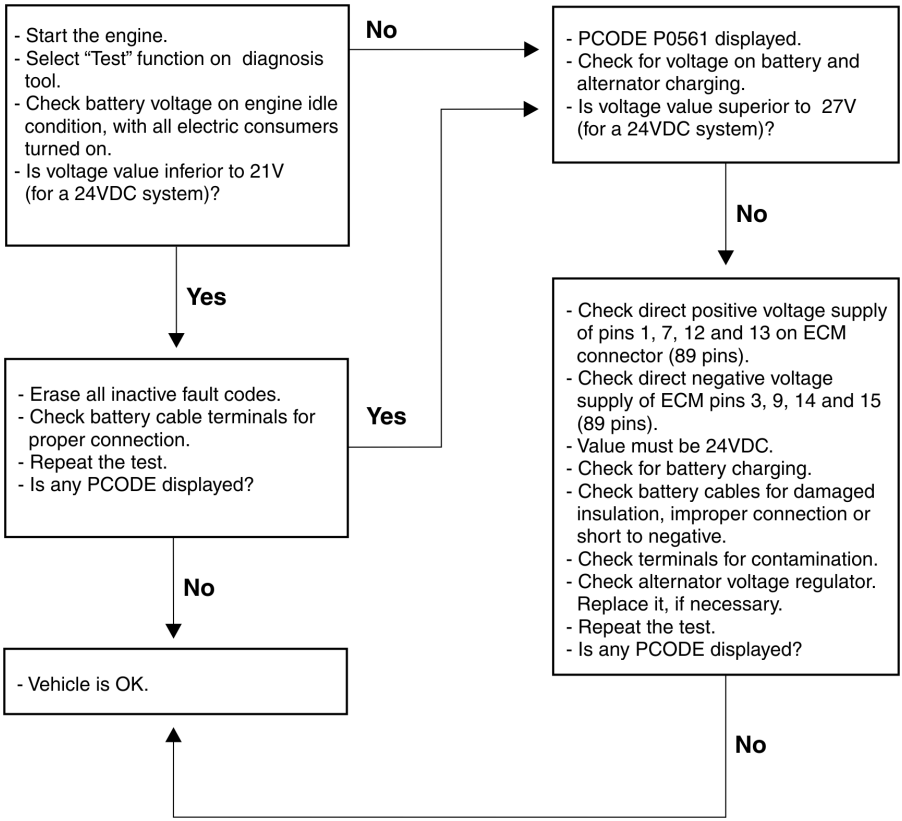

Cause
Voltage supply is high.

Details

An ECM low voltage supply was detected. This voltage is below 21 VDC (for 24 VDC system) regarding to nominal value for the system.

Strategy

Check ECM voltage supply before diagnosing a high or low voltage.
• This signal is used for monitoring of ECM voltage supply.

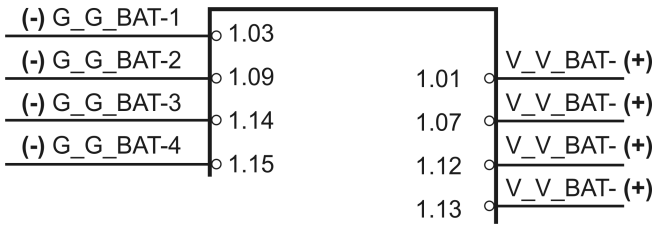

Troubleshooting Routine

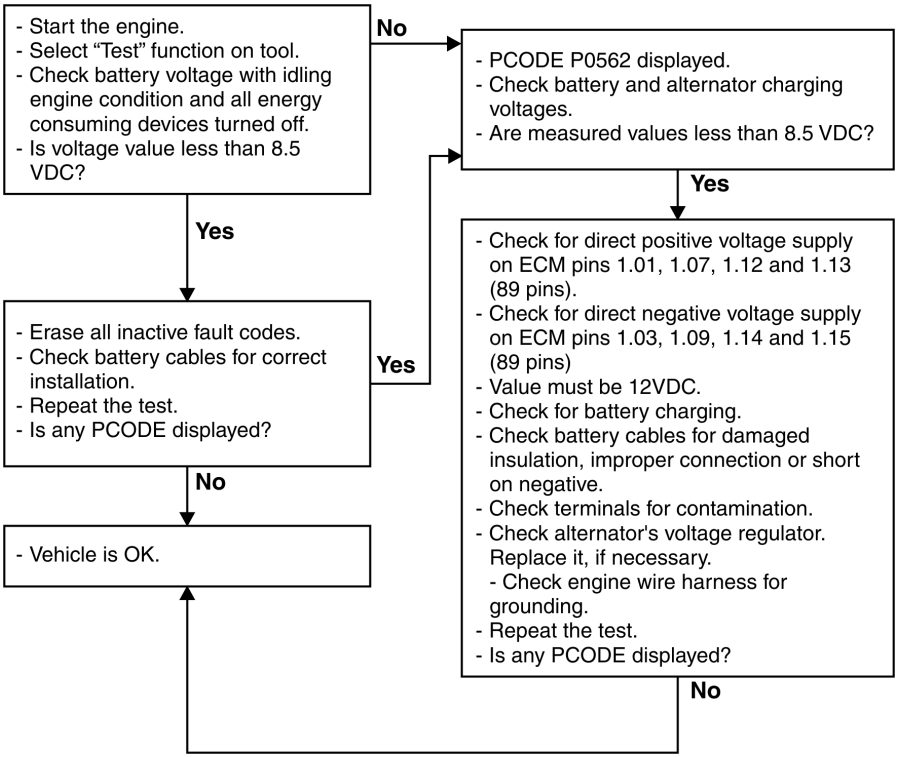

Cause
Voltage supply is high.

Details

An ECM high voltage supply was detected. This voltage is above 27 VDC (for 24 VDC system) regarding to nominal value for the system.

Strategy

Check ECM voltage supply before diagnosing a high or low voltage.
• This signal is used for monitoring of ECM voltage supply.

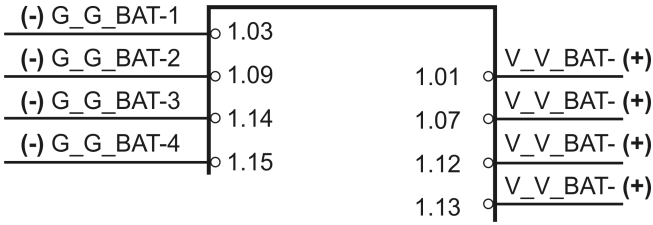

Troubleshooting Routine

- Start the engine.
- Select “Test” function on tool.
- Check battery voltage with idling engine condition and all energy consuming devices turned on.
- Is voltage value more than 16VDC?

Yes

- PCODE P0563 displayed.
- Check battery and alternator charging voltages.
- Are measured values more than 16 VDC?

Yes

- Check for direct positive voltage supply on ECM pins 1.01, 1.07, 1.12 and 1.13 (89 pins).
- Check for direct negative voltage supply on ECM pins 1.03, 1.09, 1.14 and 1.15 (89 pins).
- Value must be 12VDC.
- Check for battery charging.
- Check battery cables for damaged insulation, improper connection or short on negative.
- Check terminals for contamination.
- Check alternator's voltage regulator. Replace it, if necessary.
- Check wire harness for engine grounding.
- Repeat the test.
- Is any PCODE displayed?

No

Yes

- Erase all inactive fault codes.
- Repeat the test.
- Is any PCODE displayed?

Yes

No

- Vehicle is OK.

Cause
Signal from brake pedal sensor

Details

Possibly the circuit or presence sensor of brake pedal is in an open circuit condition, with no connection to ECM.

Before starting fault correction procedure, check indicator lights for turning on and the lamps for wattage according to specification.
Create an inverse defect according to Troubleshooting Routine in order to locate the failure.

Strategy

Defective sensor	Yellow light turns ON but engine power is not reduced.
• ECM uses this signal for acknowledgement of brake pedal activation when using Control Cruise.	

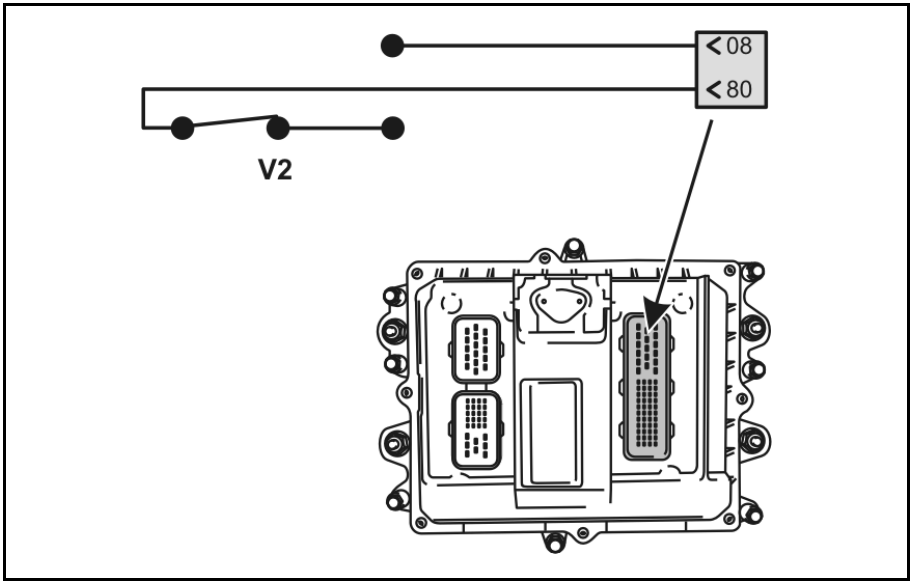

Troubleshooting Routine

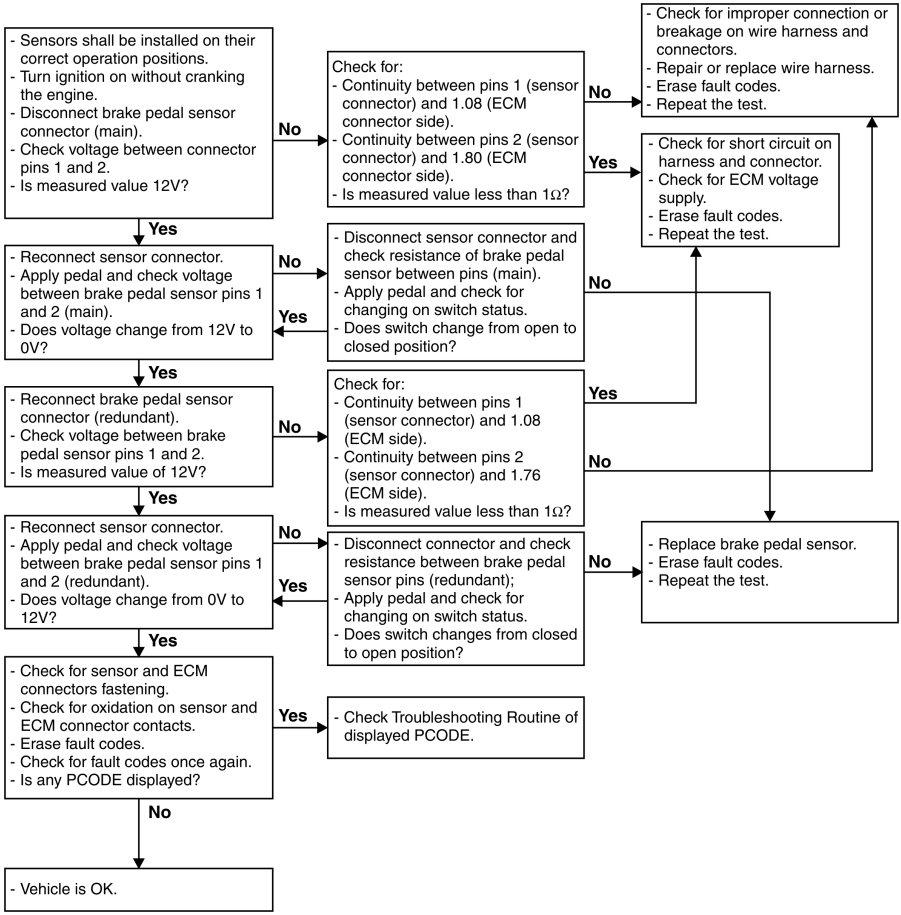

Cause
Module reset due adverse conditions.

Details

A situation was detected in which the input crossed information does not allow using the maps recorded on ECM.
Before starting fault correction, check if battery voltage parameters are according to specification. The fault code input may have been caused by a value from barometric, accelerator pedal or Rail pressure sensor.
As this is an ECM internal component, erase all inactive fault codes and check if battery terminals are correctly installed and tightened.
Inspect it again using the Diagnosis Tool. If failure persists, check the following:

1 - ECM (89 pins)

1a - Inspect positive voltage supply pins (1, 7 and 12 and 13) and negative voltage supply pins (3, 9, 14 and 15) from 89 pins connector for corrosion, bent pins or moisture presence;

1b - Check for voltage supply on pins 1, 7, 12, 13, and 3, 9, 14, 15. Value must be nominal 5V;

1c - Check for short-circuits on pins 1, 7, 12 and 13 (to ground) and 3, 9, 14 and 15 (to positive). Value must be =10 ohms;

1d - Check for direct positive voltage supply on pins 1, 7, 12 and 13, and for direct negative voltage supply on pins 3, 9, 14 and 15. Value must be 24VDC.

After having checked all parameters, inspect it again using the Diagnosis Tool.
If the failure persists, ECM shall be sent to a dealer for analysis.

This page was intentionally kept blank

Cause
Failure on monitoring internal voltage supply UB2.

Details

A voltage supply failure probably occurred on ECM's main relay, which is micro-processed and internal to the component.
Before starting fault correction procedure, check occurrence of one of the following items:

- Battery charging while it was connected, electric welding on chassis with battery connected, supplementary power source, impact, battery removal while ignition switch was ON, and polarity inversion.

If any of these events has occurred, erase all active fault codes and proceed according to Troubleshooting Routine.

Strategy

This is a safety element, so there is no emergency strategy for it.

- This is an internal relay from ECM which cannot be repaired internally. Failure correction procedure shall be done using the Diagnosis Tool.

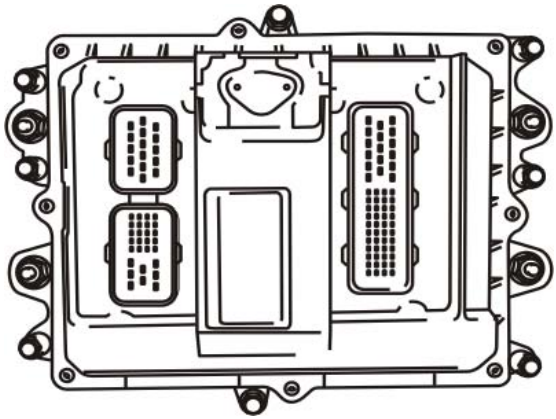

Troubleshooting Routine

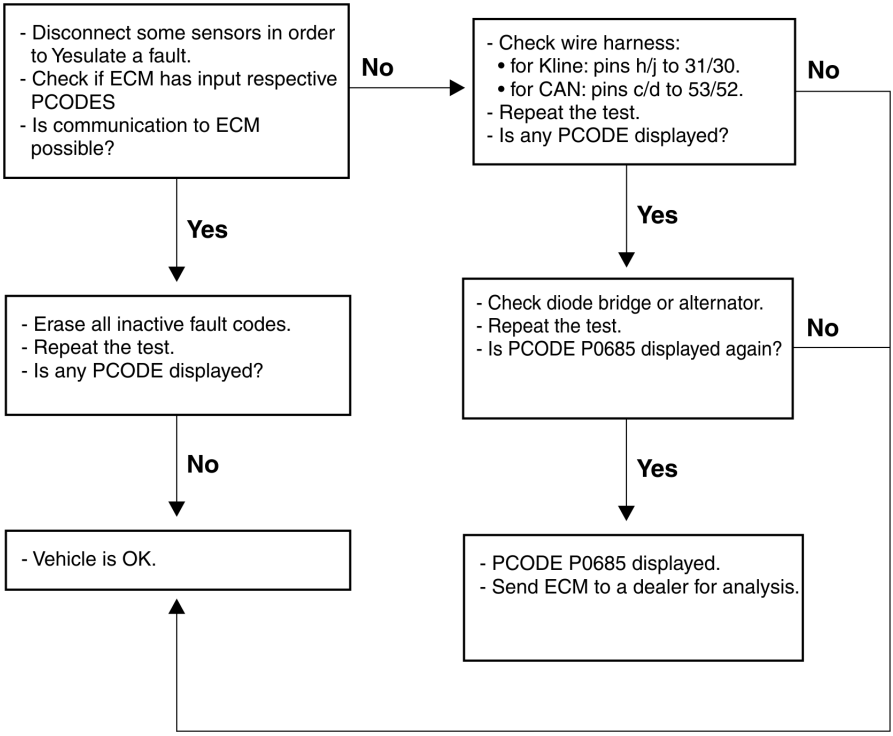

Cause
Failure on monitoring internal voltage supply UB3.

Details

A voltage supply failure probably occurred on ECM's main relay, which is micro-processed and internal to the component.
Before starting fault correction procedure, check for occurrence of one of the following items:

- Battery charging while it was connected, electric welding on chassis with battery connected, supplementary power source, impact, battery removal while ignition switch was ON, and polarity inversion.

If any of these events has occurred, erase all active fault codes and proceed according to Troubleshooting Routine.

Strategy

This is a safety element, so there is no emergency strategy for it.

- This is an internal relay from ECM which cannot be repaired internally. Failure correction procedure shall be done using the Diagnosis Tool.

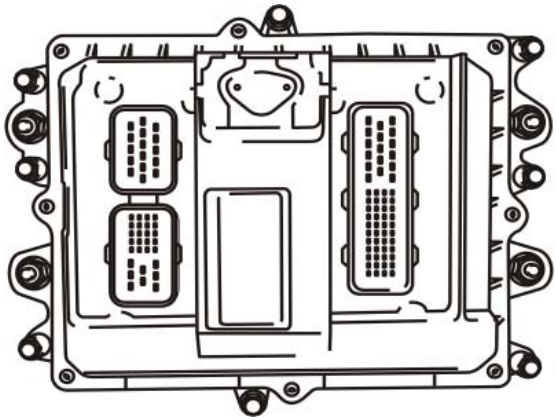

Troubleshooting Routine

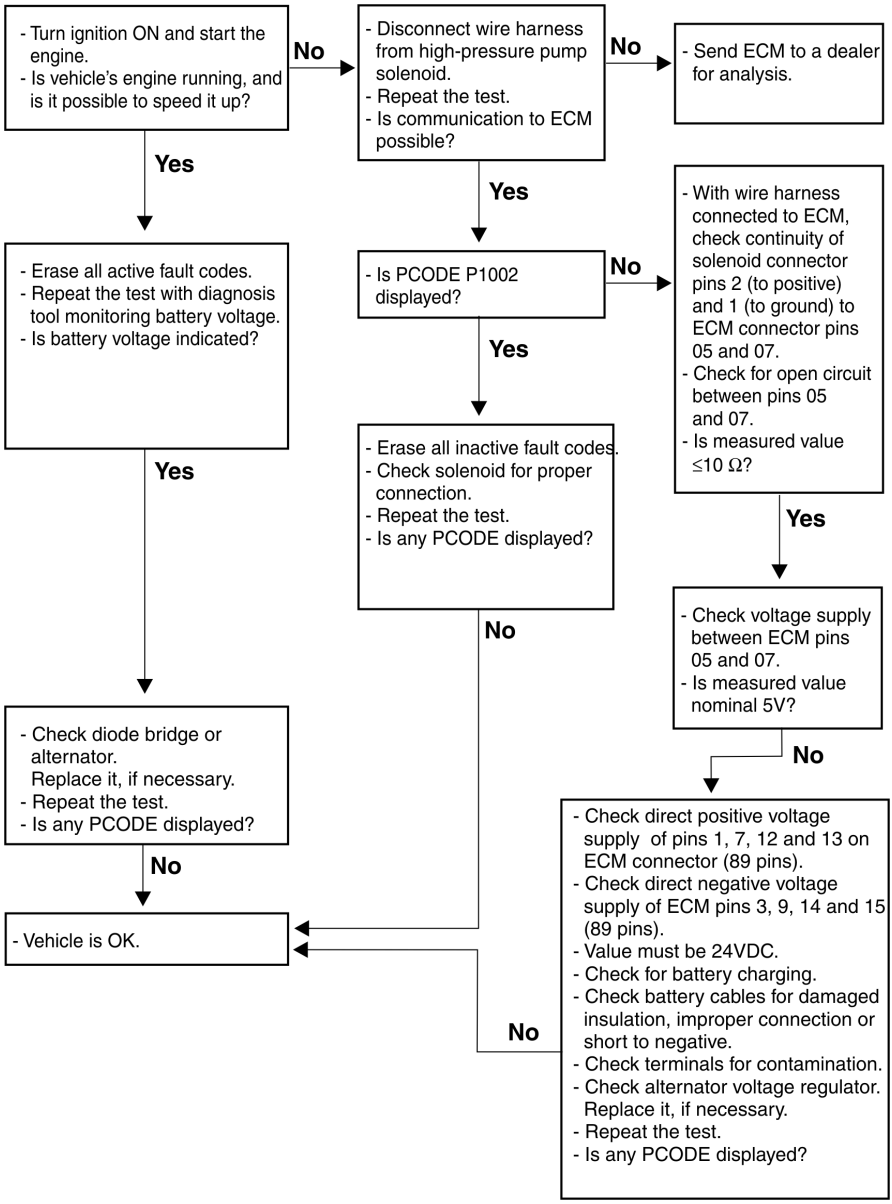

Cause
Failure on monitoring internal voltage supply UB2 and UB3.

Details

A voltage supply failure probably occurred on ECM's main relay, which is micro-processed and internal to the component.
Before starting fault correction procedure, check for occurrence of one of the following items:

- Battery charging while it was connected, electric welding on chassis with battery connected, supplementary power source, impact, battery removal while ignition switch was ON, and polarity inversion.

If any of these events has occurred, erase all active fault codes and proceed according to Troubleshooting Routine.

Strategy

This is a safety element, so there is no emergency strategy for it.

- This is an internal relay from ECM which cannot be repaired internally. Failure correction procedure shall be done using the Diagnosis Tool.

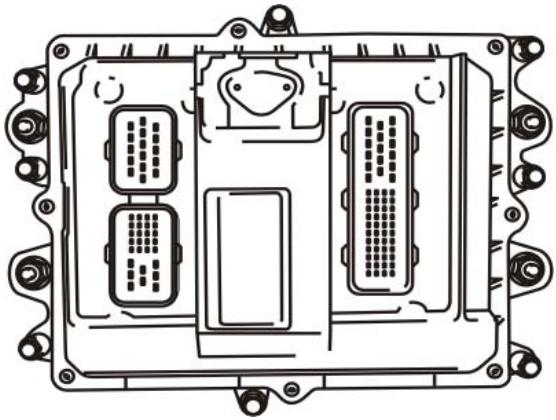

Troubleshooting Routine

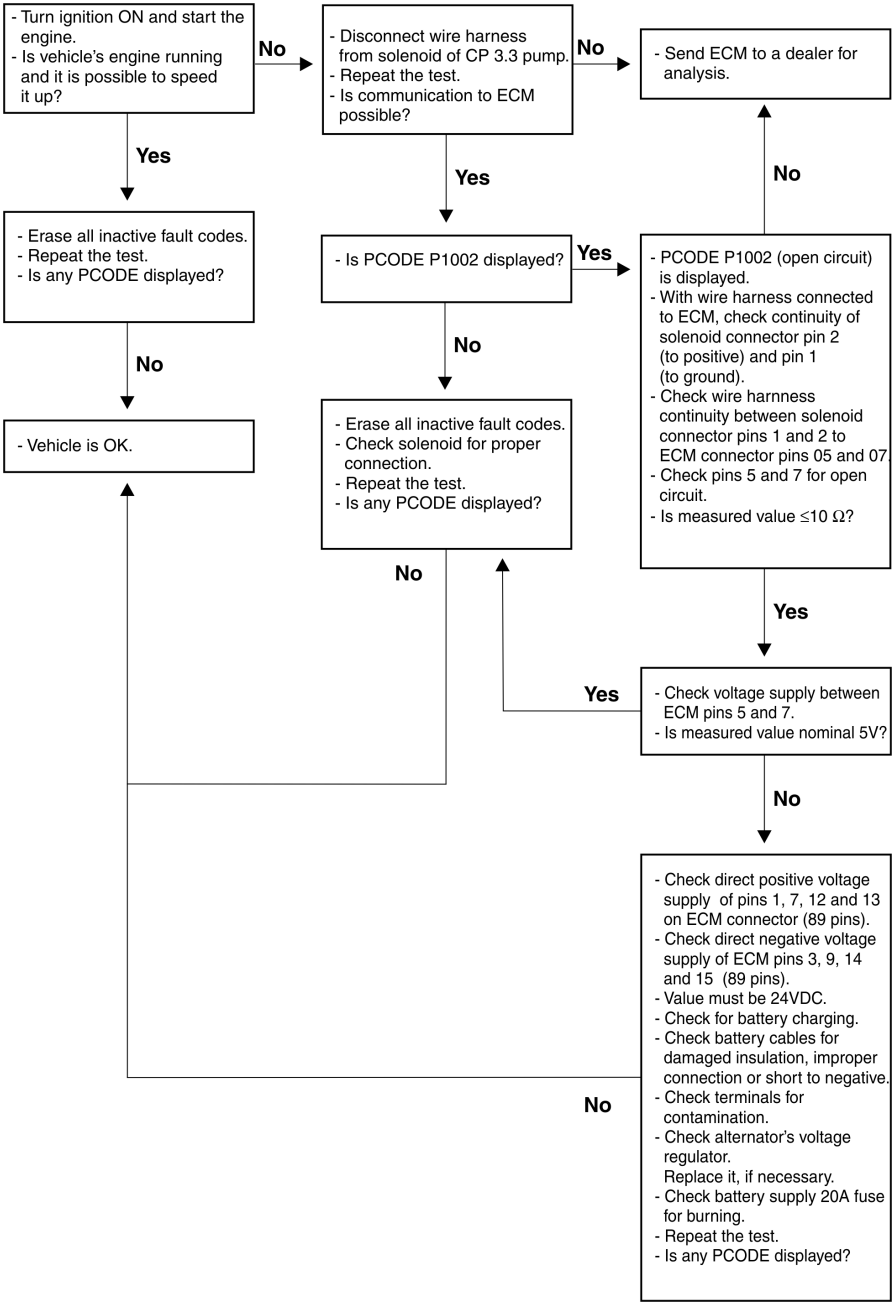

Cause
Failure on monitoring internal voltage supply UB4.

Details

A voltage supply failure probably occurred on ECM's main relay, which is micro-processed and internal to the component.
Before starting fault correction procedure, check for occurrence of one of the following items:

- Battery charging while it was connected, electric welding on chassis with battery connected, supplementary power source, impact, battery removal while ignition switch was ON, and polarity inversion.

If any of these events has occurred, erase all active fault codes and proceed according to Troubleshooting Routine.

Strategy

This is a safety element, so there is no emergency strategy for it.

- This is an internal relay from ECM which cannot be repaired internally. Failure correction procedure shall be done using the Diagnosis Tool.

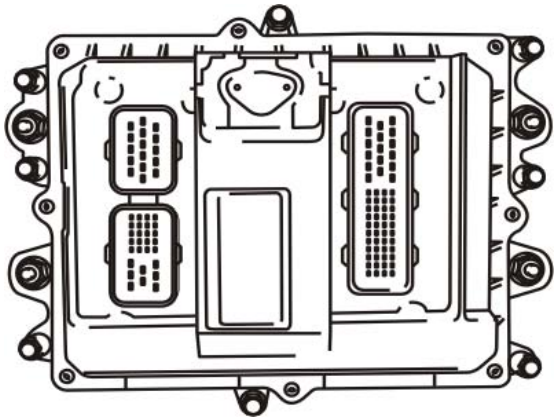

Troubleshooting Routine

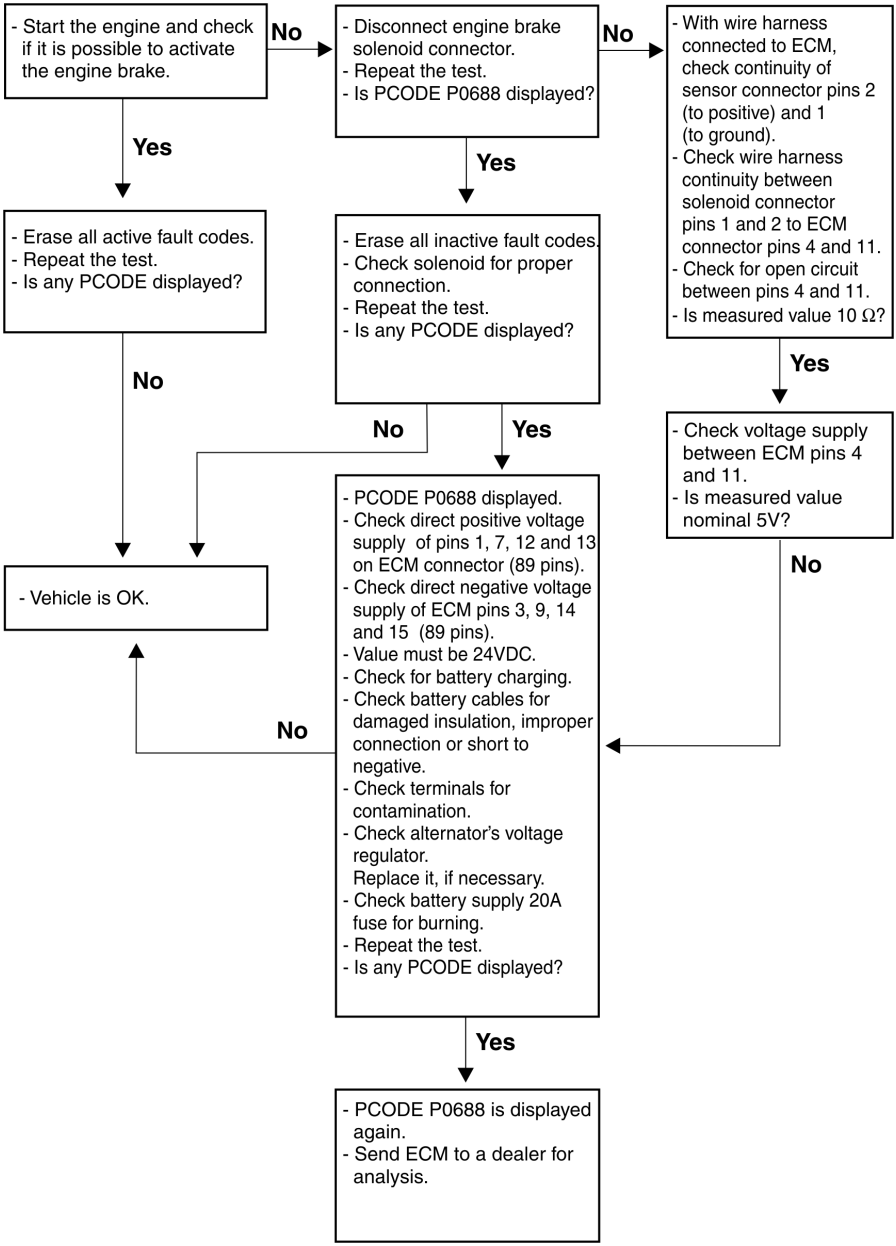

Cause
Failure on monitoring internal voltage supply UB2 and UB4.

Details

A voltage supply failure probably occurred on ECM's main relay, which is micro-processed and internal to the component.
Before starting fault correction procedure, check for occurrence of one of the following items:

- Battery charging while it was connected, electric welding on chassis with battery connected, supplementary power source, impact, battery removal while ignition switch was ON, and polarity inversion.

If any of these events has occurred, erase all active fault codes and proceed according to Troubleshooting Routine.

Strategy

This is a safety element, so there is no emergency strategy for it.

- This is an internal relay from ECM which cannot be repaired internally. Failure correction procedure shall be done using the Diagnosis Tool.

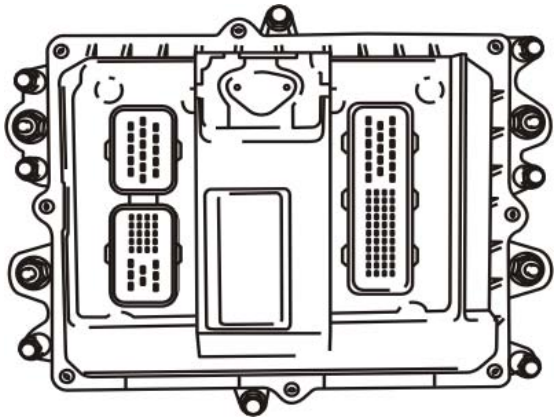

Troubleshooting Routine

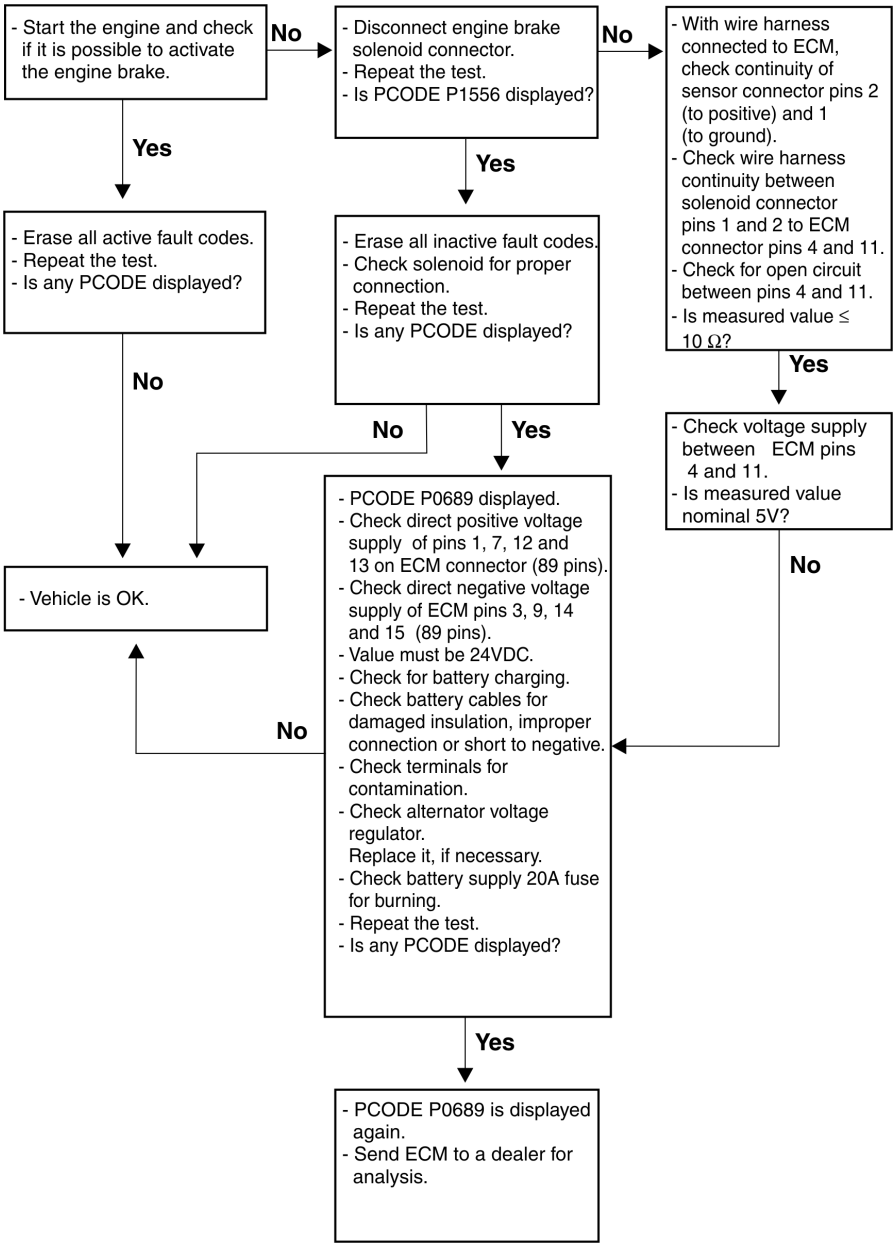

Cause
Failure on monitoring internal voltage supply UB2 and UB4.

Details

A voltage supply failure probably occurred on ECM's main relay, which is micro-processed and internal to the component.
Before starting fault correction procedure, check for occurrence of one of the following items:

- Battery charging while it was connected, electric welding on chassis with battery connected, supplementary power source, impact, battery removal while ignition switch was ON, and polarity inversion.

If any of these events has occurred, erase all active fault codes and proceed according to Troubleshooting Routine.

Strategy

This is a safety element, so there is no emergency strategy for it.

- This is an internal relay from ECM which cannot be repaired internally. Failure correction procedure shall be done using the Diagnosis Tool.

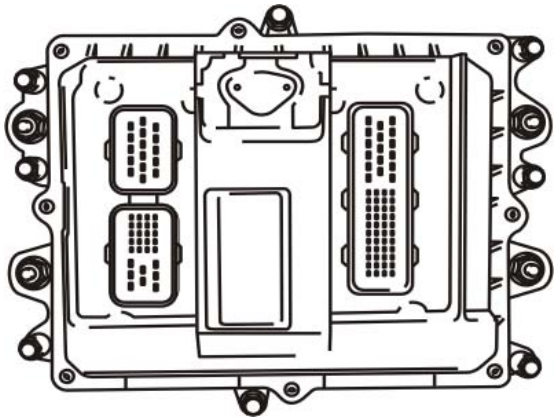

Troubleshooting Routine

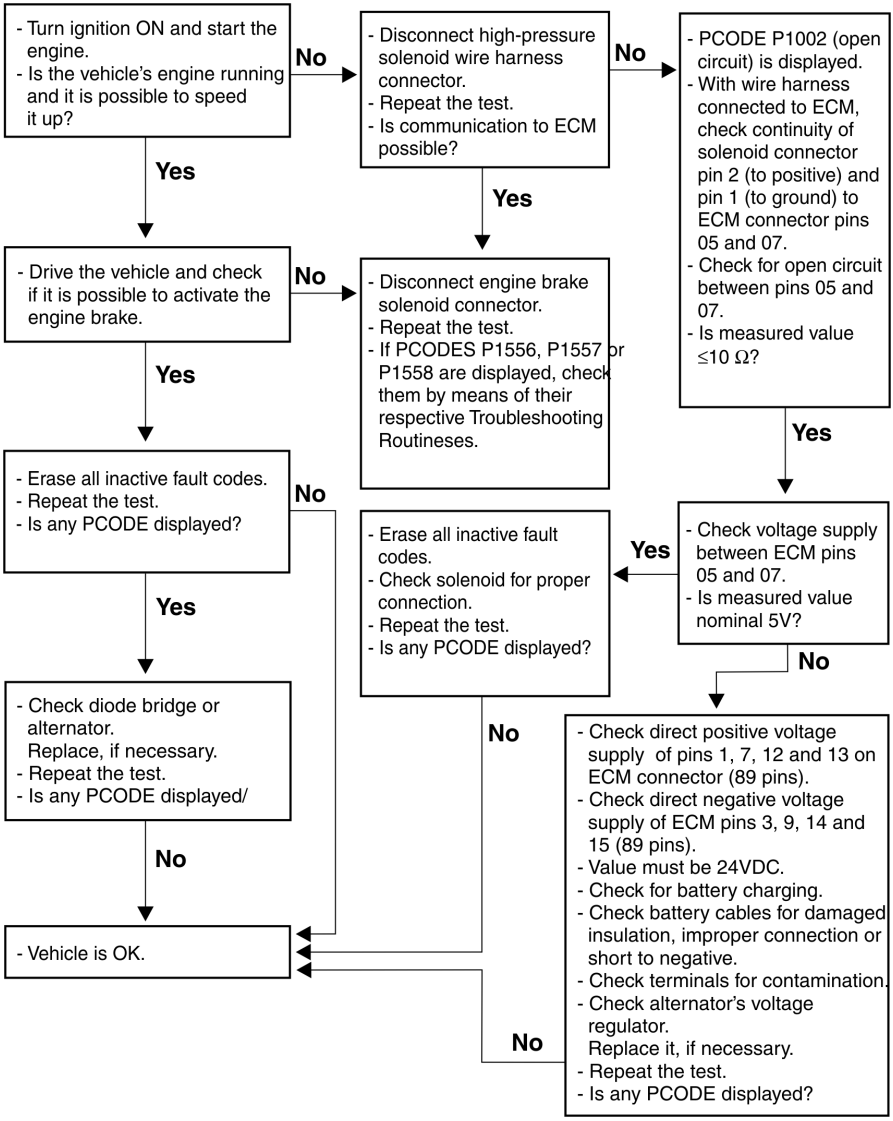

Cause
No signal from clutch sensor

Details

Possibly the circuit or sensor de clutch pedal is in an open circuit condition, with no connection to ECM.
Create an inverse defect according to Troubleshooting Routine in order to locate the failure.

Strategy

Yellow light turns ON	Engine power is reduced by 20%.

- ECM uses this signal for to acknowledge clutch pedal depressing when using Control Cruise.

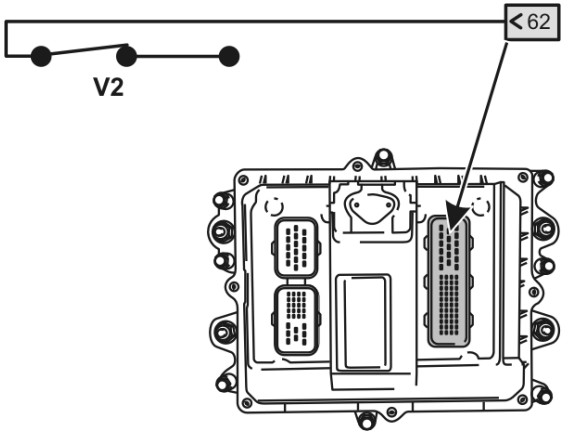

Troubleshooting Routine

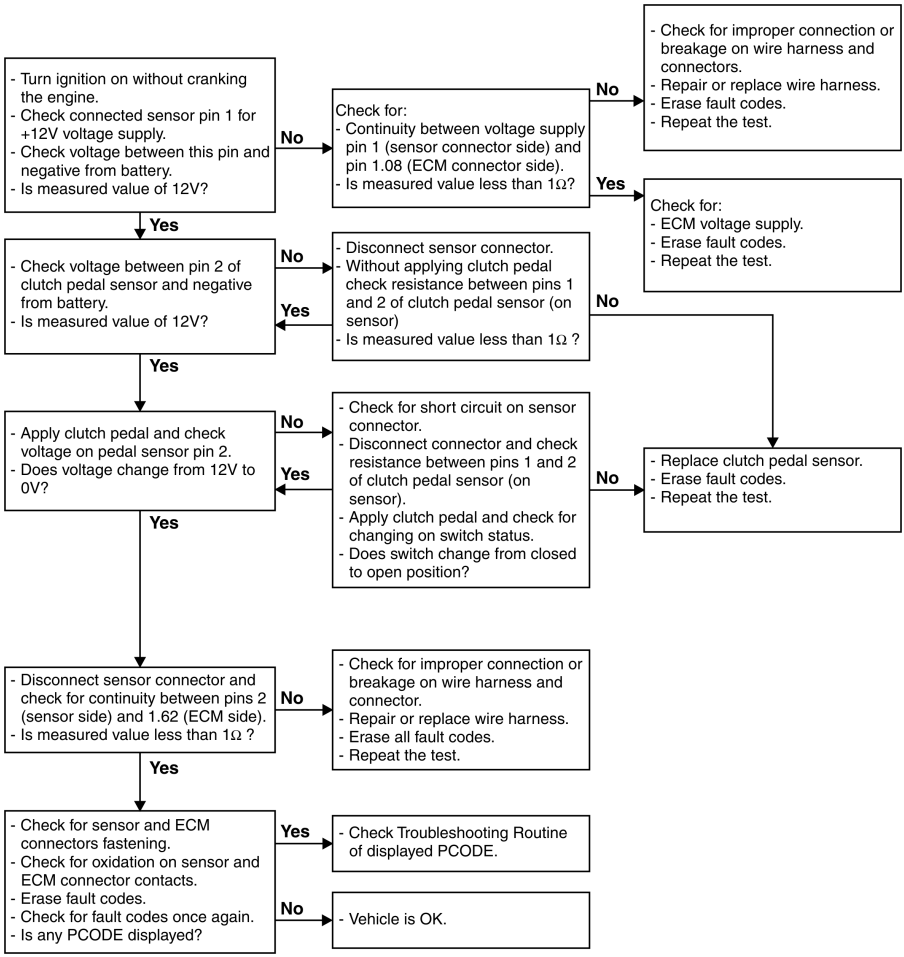

Cause
Missing signal from high-pressure pump solenoid valve.

Details

A failure was detected on Rail pressure solenoid valve mounted at high-pressure pump CP 3.3. There is possibly an open circuit on solenoid valve or short-circuits on wire harness.
The wire harness may cause this fault if it is disconnected or improperly connected to solenoid valve.

Strategy

Sensor is defective or pressure value exceeds 1485 bar.	
Red light turns ON	Engine power is reduced below 80%
Fuel pump return will open	Rail pressure will be reduced to 80 bar.
ECM uses this signal for calculation of fuel injection volume and as a safety element for the system.	

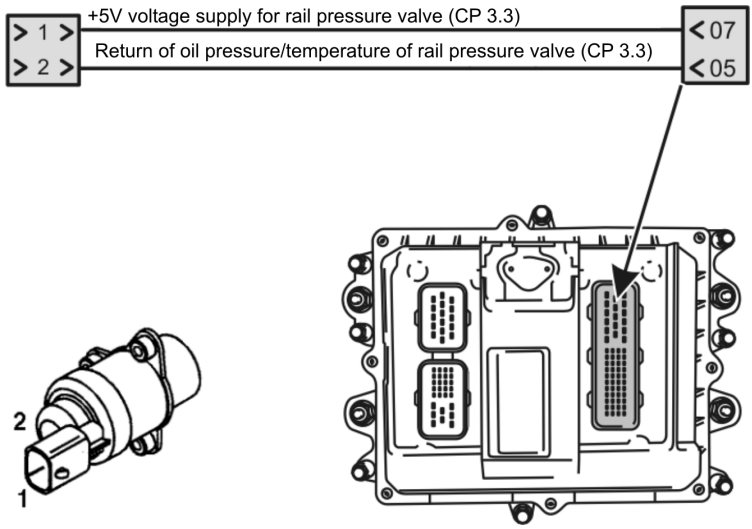

Troubleshooting Routine

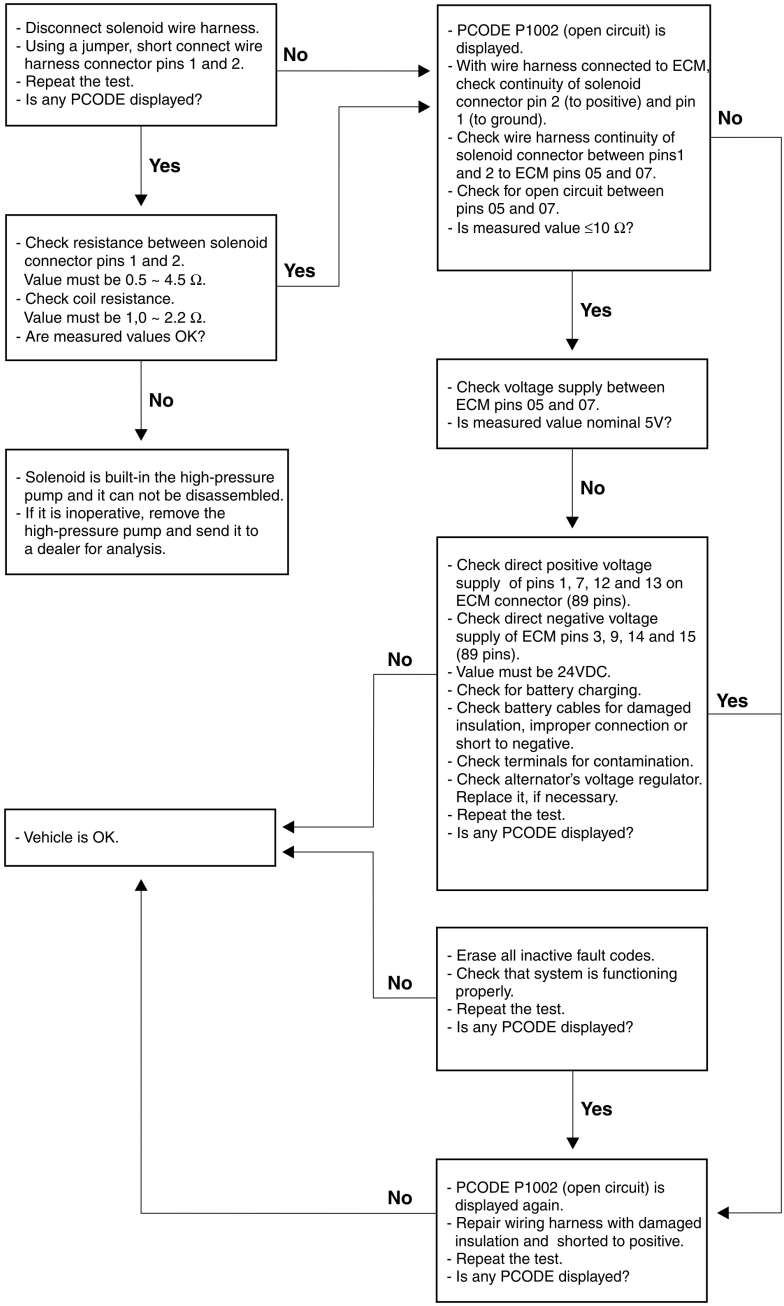

Cause
Error on analog to digital signal conversion

Details

A processing failure on signals conversion was detected.
This is an ECM internal component, so erase all active fault codes and inspect using the Diagnosis Tool. If failure persists, inspect ECM's and wire harness connector pins for corrosion, bent pins or moisture presence. Use proper probes for testing while doing measurements.

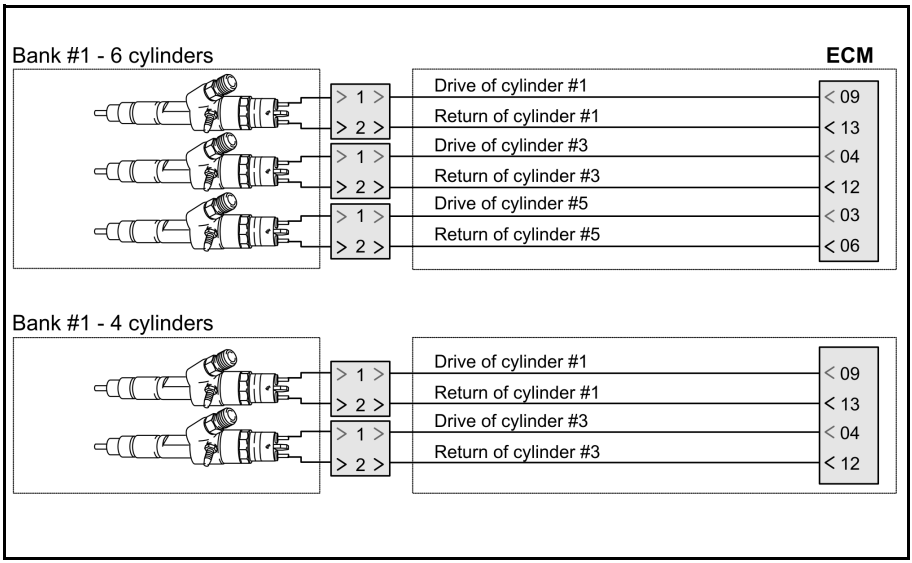

Troubleshooting Routine

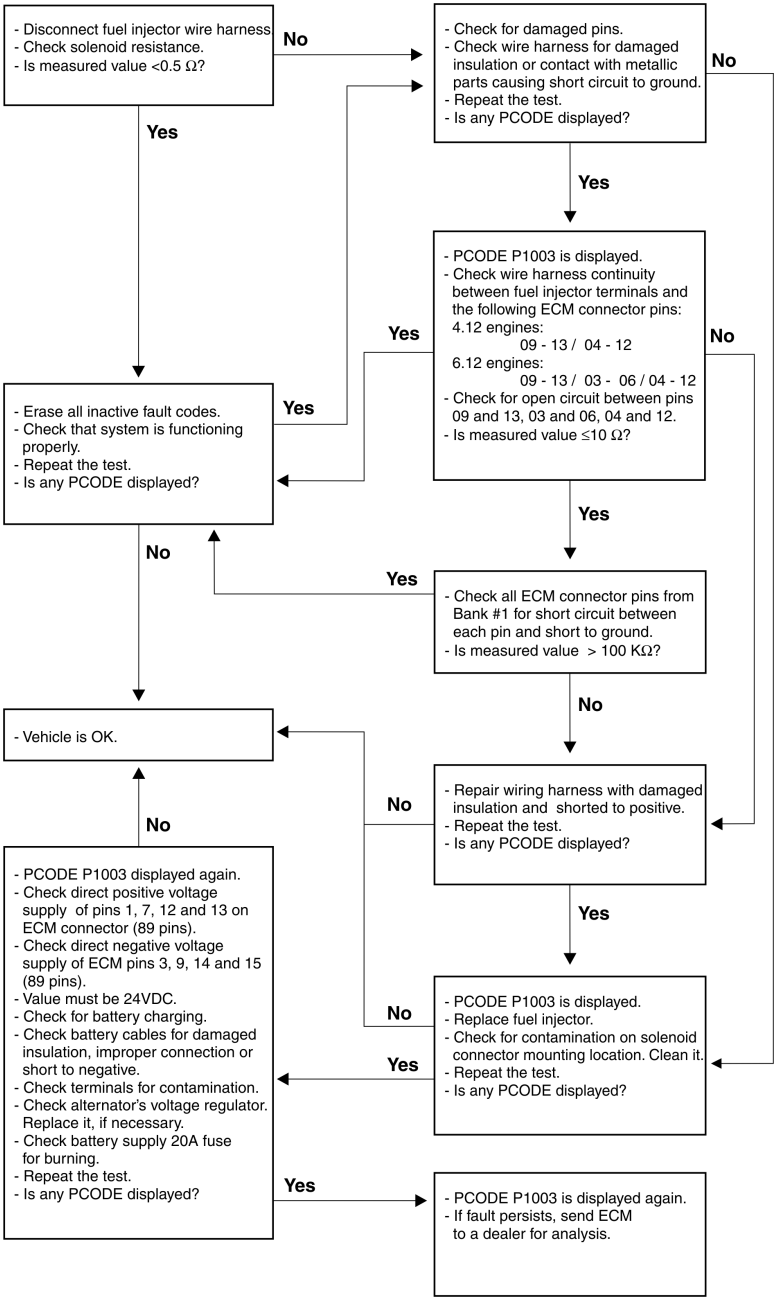

Cause
Low voltage on internal capacitor C1

Details

Capacitor recharging voltage of injectors from bank #1 is low.
Check ECM voltage supply on pins 1, 7, 12 and 13 (positive) and 3, 9, 14 and 15 (negative).
Check system's resistance to ground for a maximum value of 3 ohms.
Check ECM connectors for a probable improper connection.
As this is an ECM internal component, erase all active fault codes and inspect it using the Diagnosis Tool. If failure persists, inspect ECM's and wire harness connector pins for corrosion, bent pins or moisture presence. Use proper probes for testing while doing measurements.

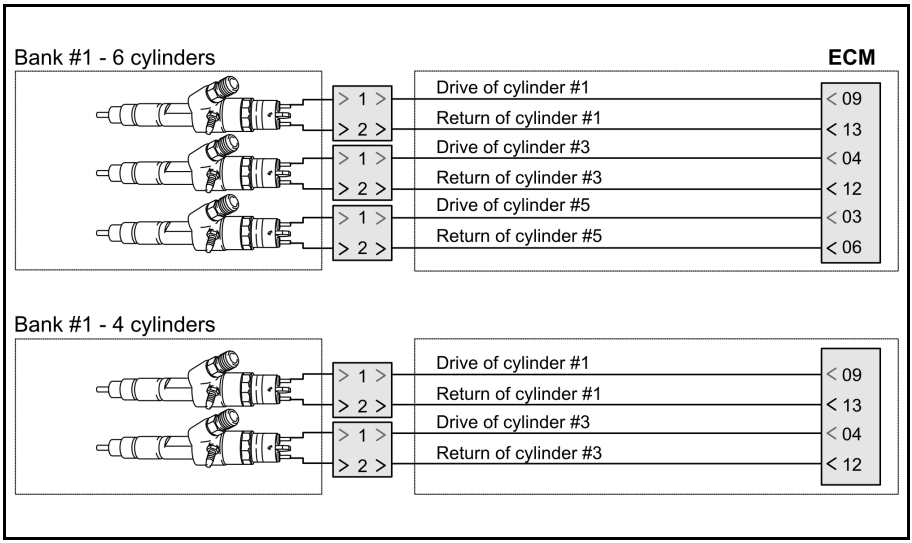

Troubleshooting Routine

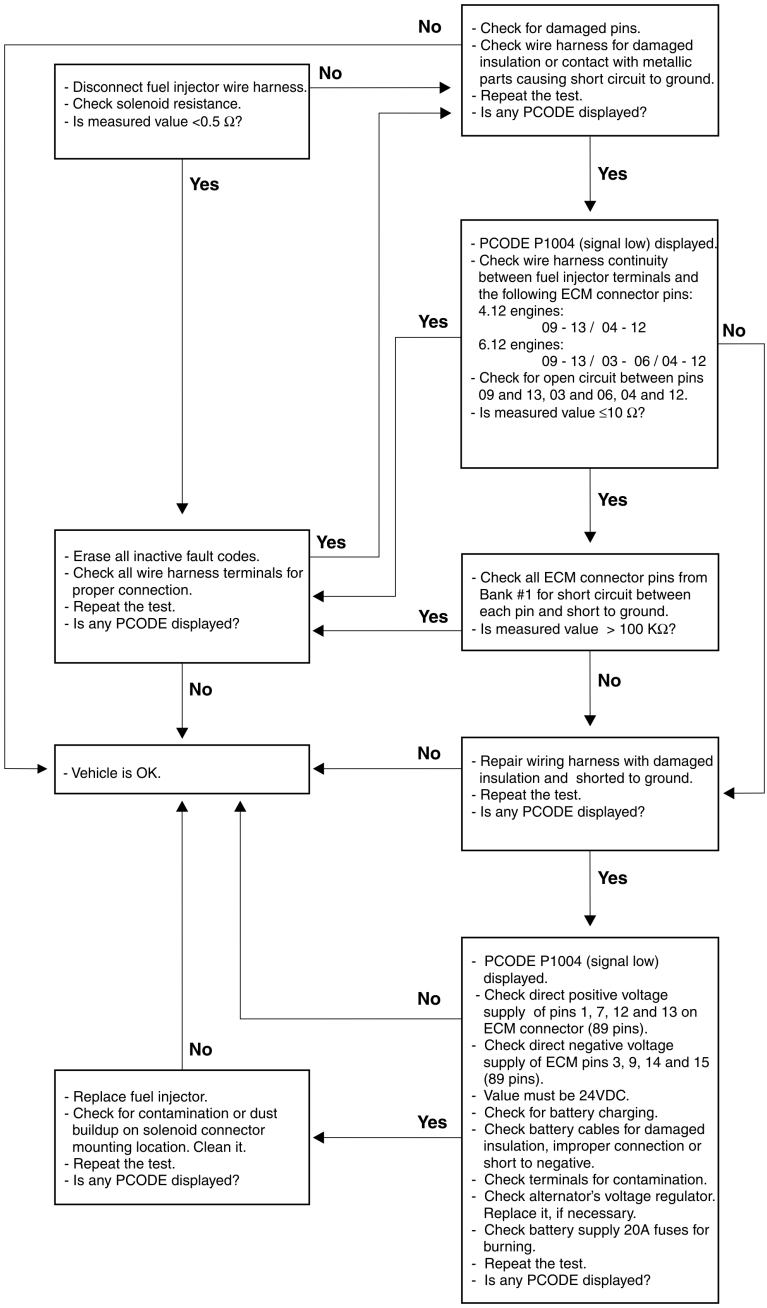

Cause
High voltage on capacitor #1

Details

Capacitor recharging voltage of injectors from bank #1 is high.
Check ECM voltage supply on pins 1, 7, 12, 13 (positive) and 3, 9, 14, 15 (negative).
Check resistance on system's positive branch for a maximum value of 3 .
Check alternator's rectifier diodes bridge.
Inspect injector terminals and nuts for short-circuit between wires and any metallic part located under the cylinder head cover.
Check wire harness terminal nuts proper tightening according to specified torque value.
This is an ECM internal component, so erase all active fault codes and inspect using the Diagnosis Tool. If failure persists, inspect ECM's and wire harness connector pins for corrosion, bent pins or moisture presence. Use proper probes for testing while doing measurements.
.

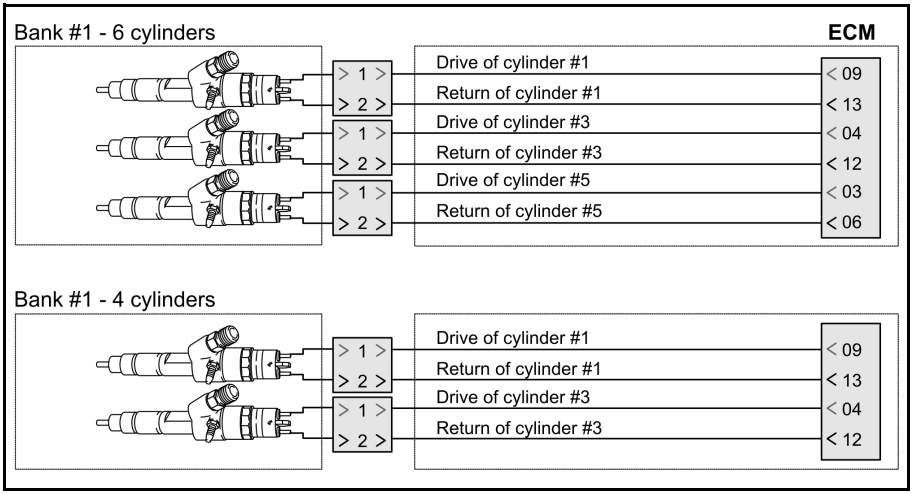

Troubleshooting Routine

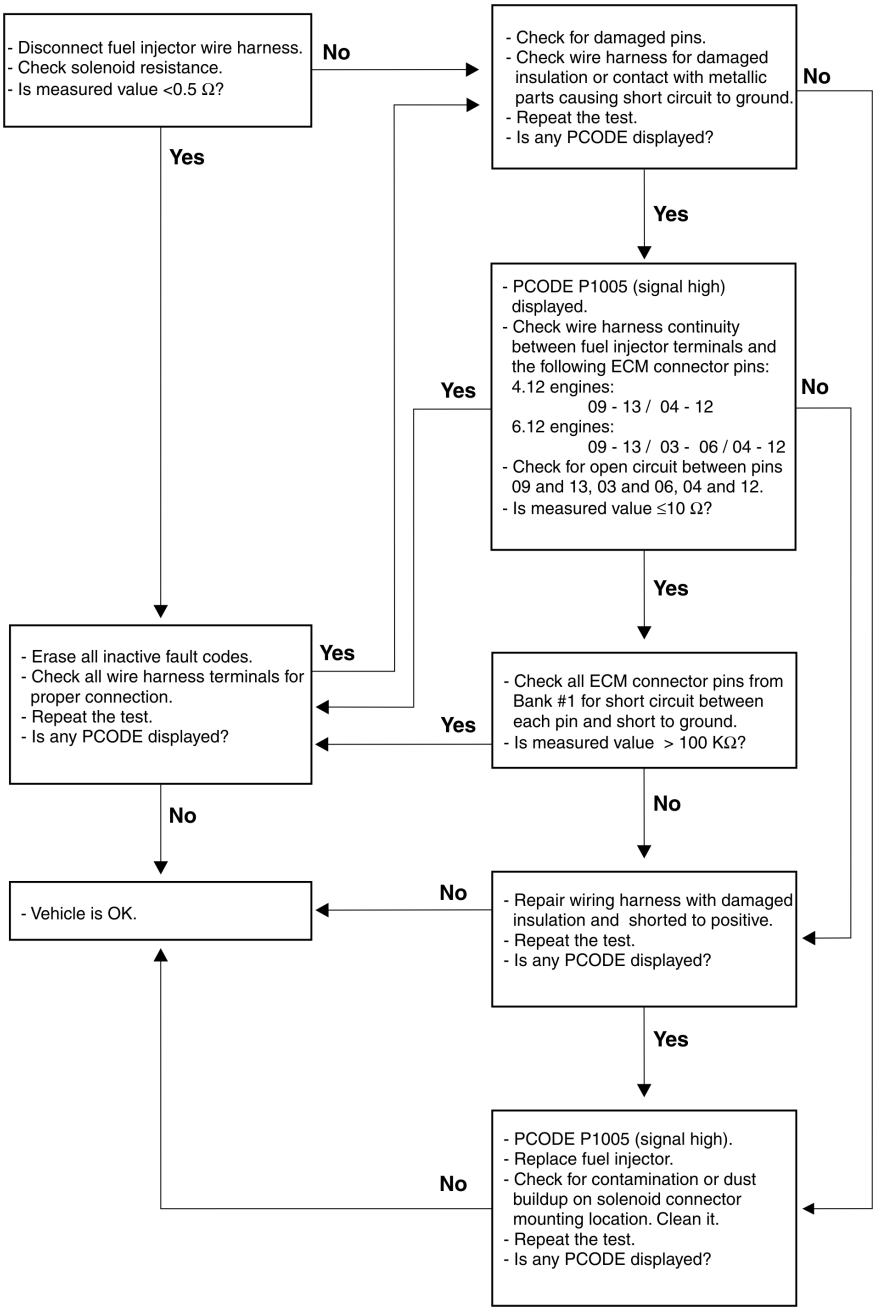

Cause
Error on analog to digital signal conversion

Details

A failure was detected while processing the signals conversion.
This is an ECM internal component, so erase all active fault codes and inspect using the Diagnosis Tool. If failure persists, inspect ECM's and wire harness connector pins for corrosion, bent pins or moisture presence. Use proper probes for testing while doing measurements.

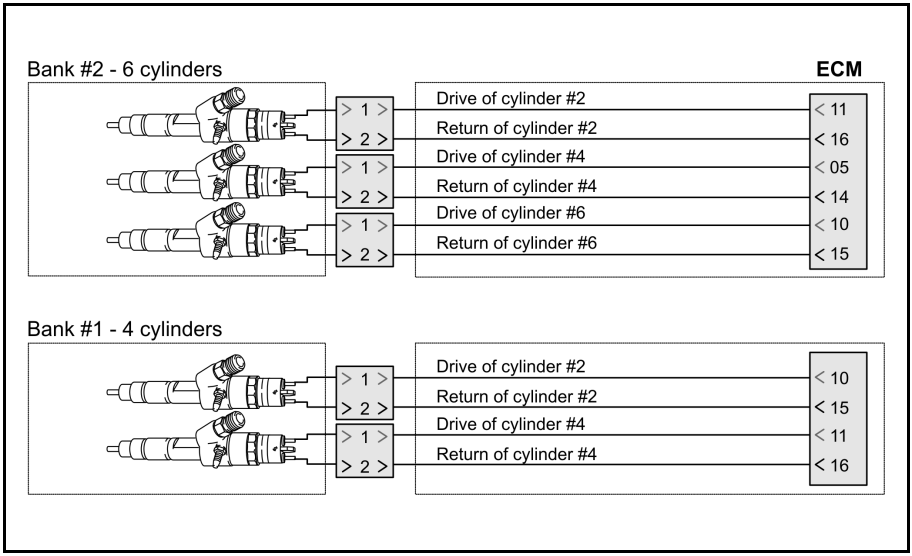

Troubleshooting Routine

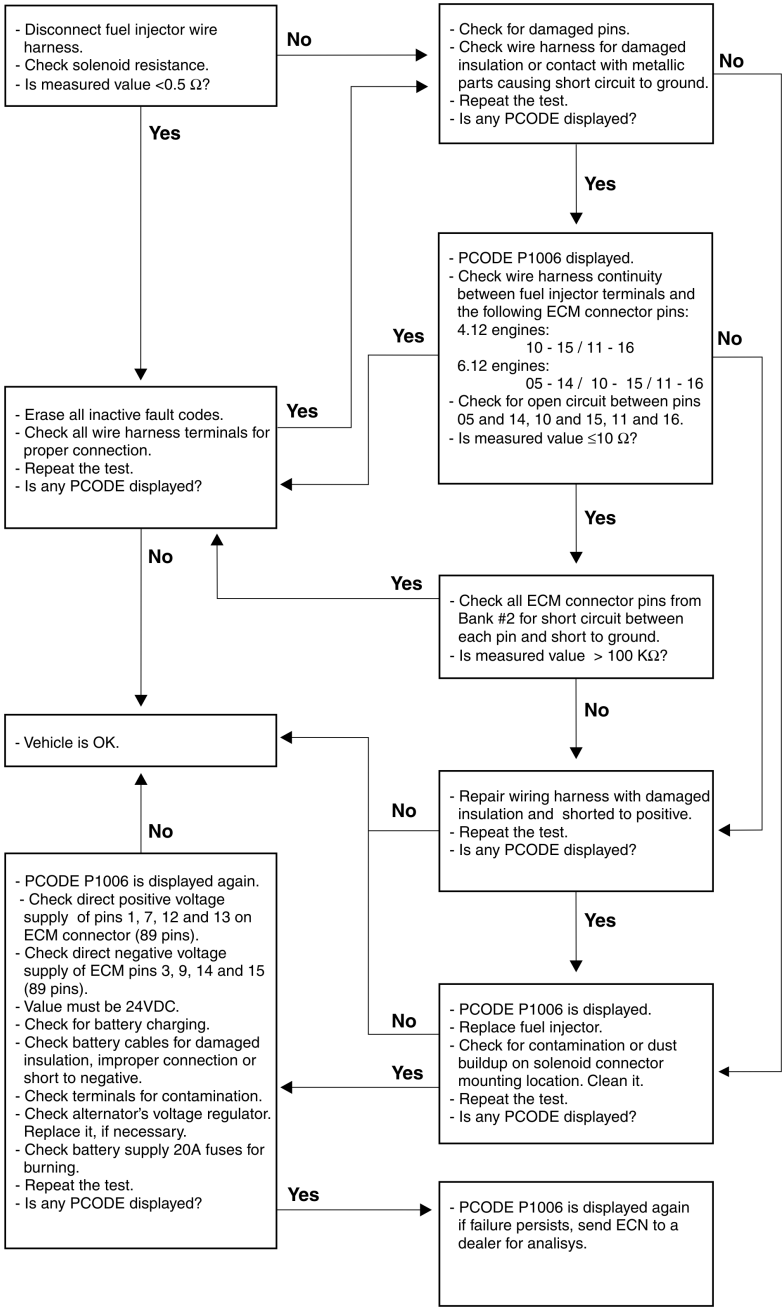

Cause
Low voltage on internal capacitor C2

Details

Capacitor recharging voltage of injectors from bank #2 is low.
Check for module voltage supply on pins 1, 7, 12 and 13 (positive) and 3, 9, 14 and 15 (negative).
Check system's resistance to ground for a maximum value of 3 ohms.
Check ECM connectors for a probable improper connection.
This is an ECM internal component, so erase all active fault codes and inspect using the Diagnosis Tool. If failure persists, inspect ECM's and wire harness connector pins for corrosion, bent pins or moisture presence. Use proper probes for testing while doing measurements.
.

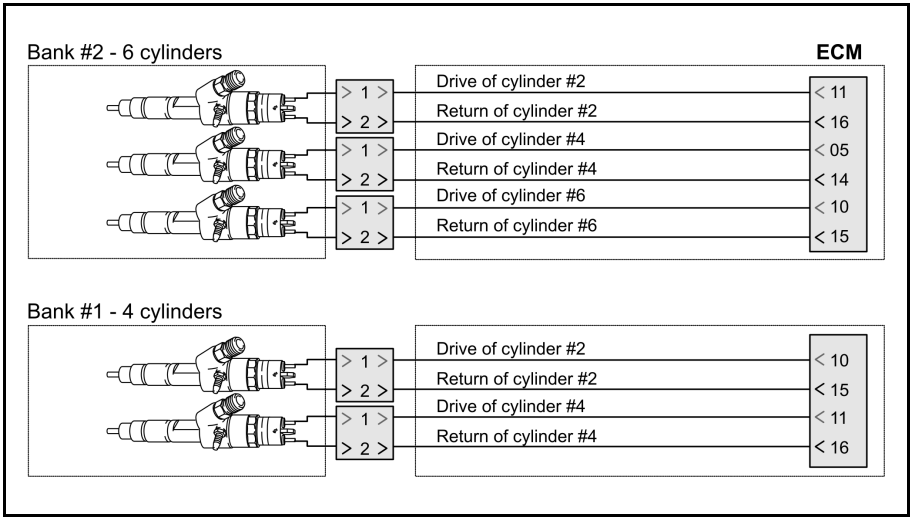

Troubleshooting Routine

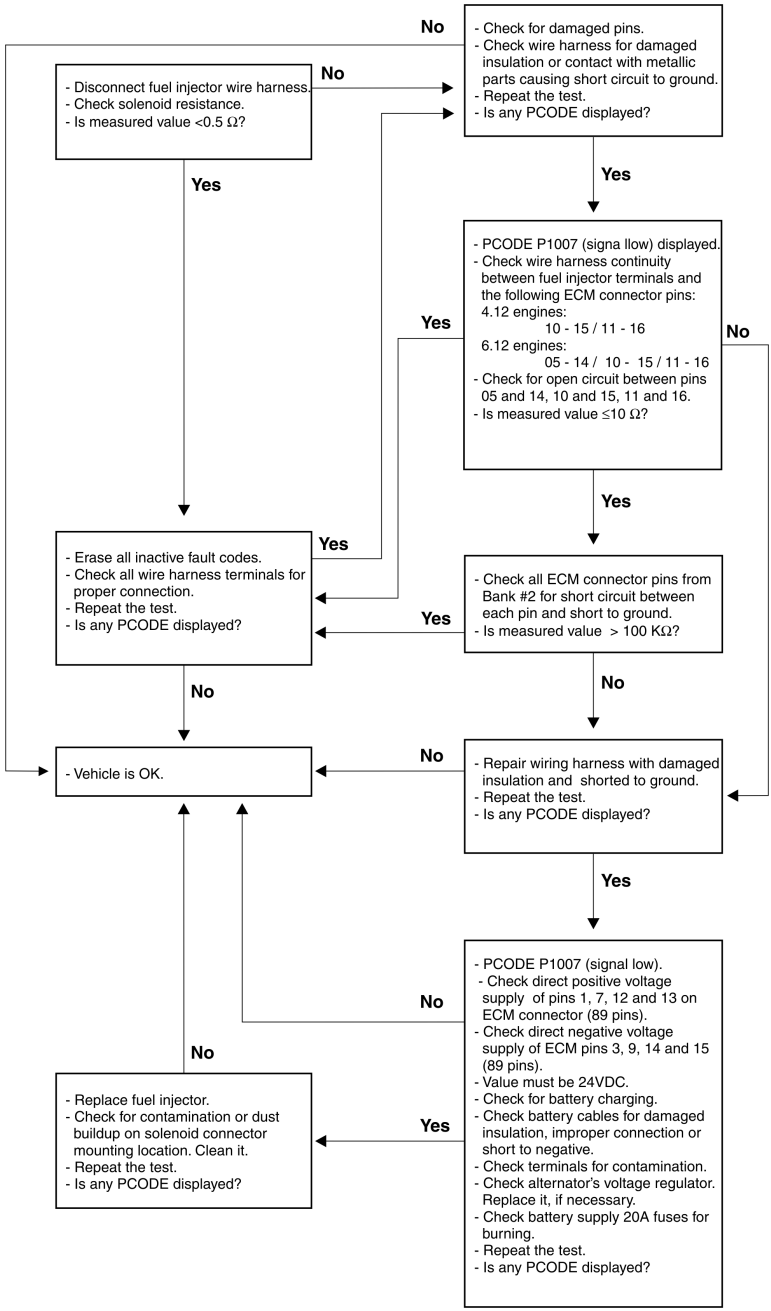

Cause
High voltage on internal capacitor C2

Details

Capacitor recharging voltage of injectors from bank #2 is high.
Check ECM voltage supply on pins 1, 7, 12 and 13 (positive) and 3, 9, 14 and 15 (negative).
Check resistance on system's positive branch for a maximum value of 3 ohms.
Check alternator's rectifier diodes bridge.
This is an ECM internal component, so erase all active fault codes and inspect using the Diagnosis Tool. If failure persists, inspect ECM's and wire harness connector pins for corrosion, bent pins or moisture presence. Use proper probes for testing while doing measurements.

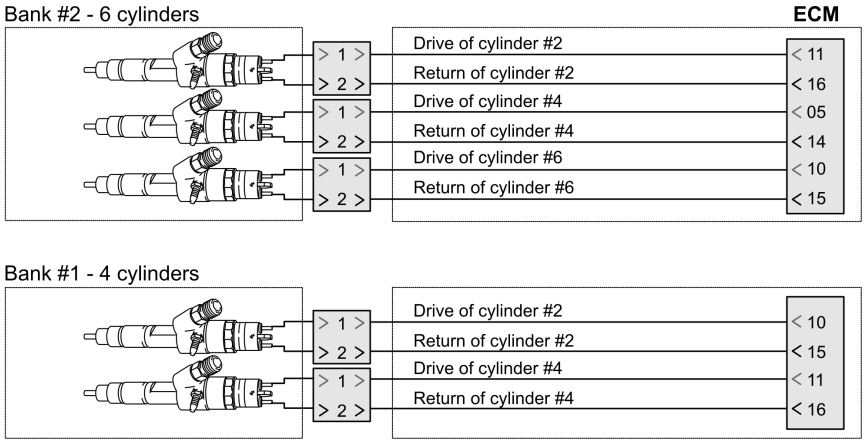
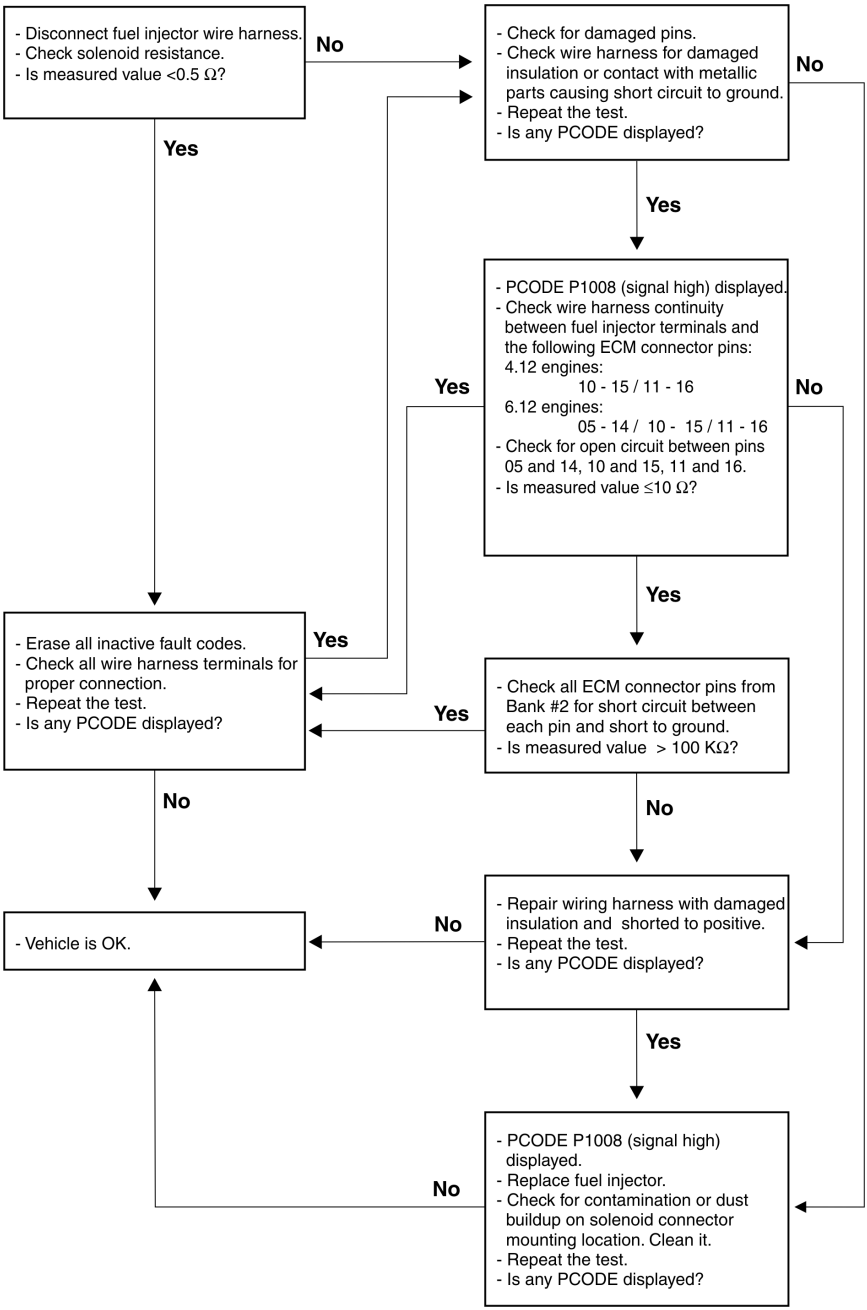
Troubleshooting Routine