DriveMaster®

SPRING-ENGAGED FAN DRIVE

REPAIR KIT INSTALLATION INSTRUCTIONS

Engine ***Cooling Solutions*** *Worldwide™*

HORTON®

TABLE OF CONTENTS

INTRODUCTION **3**
General Information 3
PRIOR TO SERVICING **3**
REMOVING THE FAN DRIVE **4**
DRIVEMASTER PARTS **5**
Parts Identification 5
Repair Kits 6
DriveMaster Seal Kit (Part #994346) 6
DriveMaster Super Kit 7
DriveMaster Friction Disc Kit 8
DriveMaster Friction Liner Kit (Part #994349) 8
DISASSEMBLING THE FAN DRIVE **9**
Tools Required 9
Disassembly 9
Fan Mounting Disc Removal and Inspection 9
Spring Housing/Piston Assembly Removal 10
Air Chamber Seals 11
Sheave and Sheave Bearings 12
TORQUE SPECIFICATIONS **12**
REBUILDING THE FAN DRIVE **13**
Sheave Bearings 13
Air Cartridge 14
Sheave Replacement 14
Spring Housing/Piston Assembly Reassembly 15
Fan Mounting Disc Reassembly 16
REINSTALLING THE FAN DRIVE **17**
TROUBLESHOOTING **18**

INTRODUCTION

General Information

Horton uses the following special notices to give warning of possible safety related problems which could cause serious injury and provide information to help prevent damage to equipment.

DANGER

Danger is used to indicate the presence of a hazard which will cause severe personal injury, death, or substantial property damage if the warning is ignored.

WARNING

Warning is used to indicate the presence of a hazard which can cause severe personal injury, death, or substantial property damage if the warning is ignored.

CAUTION

Caution is used to indicate the presence of a hazard which will or can cause minor personal injury or property damage if the warning is ignored.

NOTE

Note is used to notify people of installation, operation, or maintenance information which is important but not hazard related.

PRIOR TO SERVICING

You must follow your company safety practices, which should adhere to or be better than Federal or State approved shop safety practices and procedures. Be sure that you read and understand all the procedures and instructions before beginning work on this unit.

NOTE

Parts replacement and/or repair of your Horton DRIVE MASTER Fan Drive should be performed only by the Horton Factory or an authorized Horton Distributor or Dealer to keep your warranty coverage intact during the warranty period.

Before rebuilding your DRIVEMASTER Fan Drive, note the Fan Drive Serial No., Service Part No., Date of Installation, and Vehicle Mileage.

Serial No. _____

Service Part No. _____

Installation Date _____

Vehicle Mileage _____

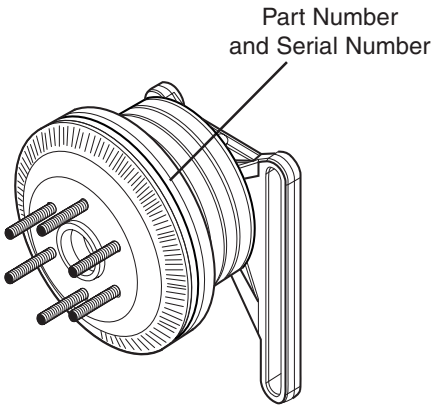

REMOVING THE FAN DRIVE

NOTE
The procedure for removing the Fan Drive varies from one vehicle to another. Refer to the vehicle's service manual for a detailed description of this process. In general, proceed as follows:

1. Turn the vehicle ignition off, apply the vehicle's parking brake, and block the vehicle's wheels.

NOTE
Protect the radiator from possible damage from the fan during fan removal and fan drive installation.

2. Remove the fan from the Fan Drive.
3. Bleed the air from the vehicle's reservoir and disconnect the air hose from the Fan Drive.
4. Loosen or remove the drive belts.

NOTE
Because of the weight of the Fan Drive (ranging from 35-55 Lbs. [15.88-24.95 Kg]), you may want to use a hoist for support during removal.

5. Remove the Fan Drive mounting bolts and lift the Fan Drive out of the engine compartment.

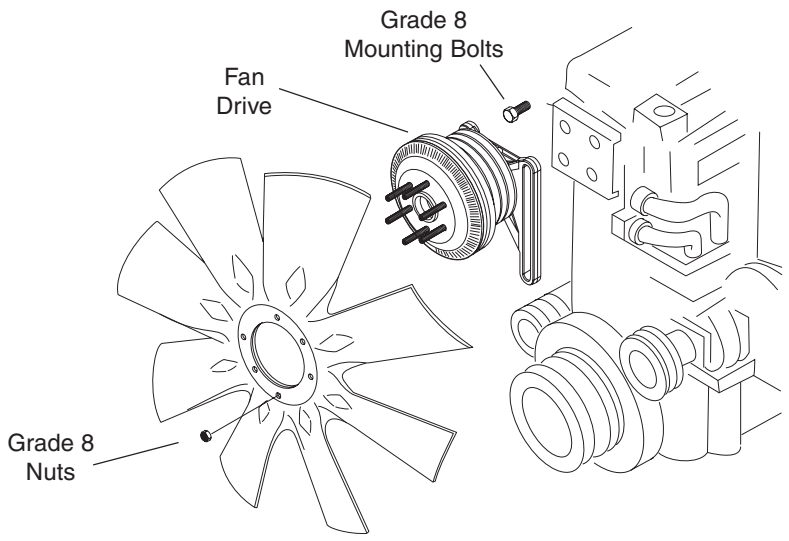

Steps 1-5

Parts Identification

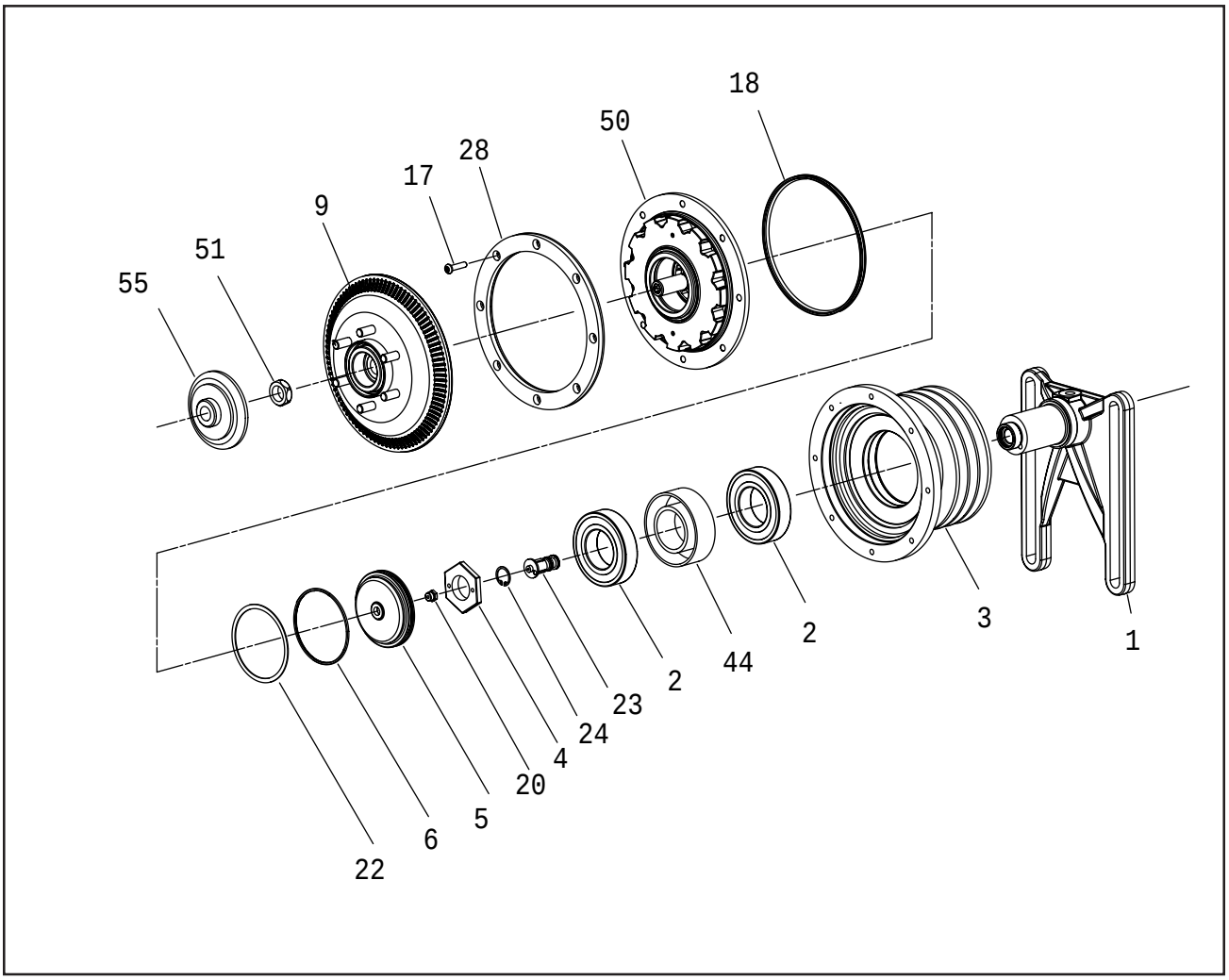

ITEM	DESCRIPTION	QTY
1	Journal Bracket	1
2[1]	Ball Bearings	2
3	Sheave	1
4[1]	Bearing Nut	1
5	Air Chamber Cap	1
6[1]	O-Ring Seal	1
9[1]	Fan Mounting Disc/Studs	1
50[1]	Spring Housing/Piston	1
17[1]	Button Head Screws	8

ITEM	DESCRIPTION	QTY
18[1]	Air Chamber Seal	1
20[1]	Face Seal	1
44[2]	Bearing Spacers	1
22[1]	Air Chamber Cap Retaining Ring	1
23[1]	Air Cartridge Assembly	1
24[1]	Air Cartridge Retaining Ring	1
28[1]	Friction Liner	1
51[2]	Jam Nut	1
55[1]	Cage Nut (Used for repairs only)	-

[1] Denotes Repair Kit item.

[2] Not used on all Fan Drives.

Repair Kits

Horton offers several different ways to repair or rebuild your DriveMaster Fan Drive.

DriveMaster Seal Kit (Part #994346)

Install a Seal Kit if an air leak has developed inside of the DriveMaster Fan Drive. The Seal Kit consists of the parts listed and described below:

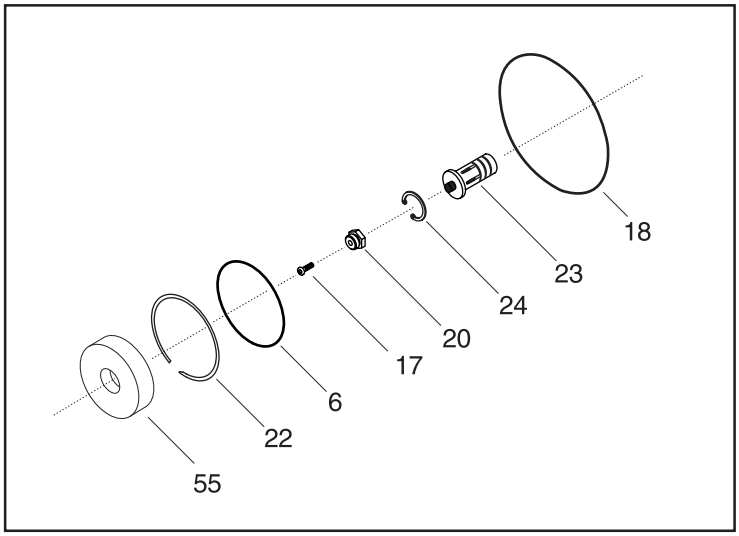

Air Chamber Seal (#18): The air chamber seal forms an air seal between the air chamber and the spring housing/piston assembly. The air chamber seal goes around the bottom half of the spring housing/piston assembly.
O-Ring (#6): The o-ring forms an air seal between the air chamber and the air chamber cap.
Air Cartridge (#23): The air cartridge fits inside the Journal shaft. Air pressure comes up through the center of the shaft, into and through the air cartridge, and into the air chamber. The cartridge has a spring loaded carbon tip that presses against the face seal and forms an air tight seal while the fan drive is spinning.
Face Seal (#20): The face seal screws into the center of the air cap and forms an air seal with the carbon tip of the air cartridge.
Retaining Rings (#22, #24): There are two retaining rings in the seal kit. The smaller retaining ring is used to hold the air cartridge inside the journal shaft. When installing this retaining ring, the beveled side must be facing the air cartridge. The larger retaining ring is used to hold the air cap in place.
Button Head Screws (#17): The torx button head screws are used to attach the friction liner and the spring housing to the sheave. Alternately and evenly tighten the screws to 80 in lbs torgue.
Cage Nut (#55): The cage nut is used to keep the spring housing/piston assembly together when removing from the sheave. It maintains pressure on internal springs after the button head screws are removed.
T55 Torx Plus Bit (not pictured): The T55 torx plus bit is used to help remove the fan mounting disc from the jack bolt.
O-Ring Lubricant (not pictured): Apply lubricant to the new air chamber cap o-ring and the air chamber seal before installation.

DriveMaster Super Kit

Install a Super Kit if the bearings are running rough or if the DriveMaster Fan Drive needs to be completely rebuilt due to excessive wear. The Super Kit consists of the parts listed and described below:

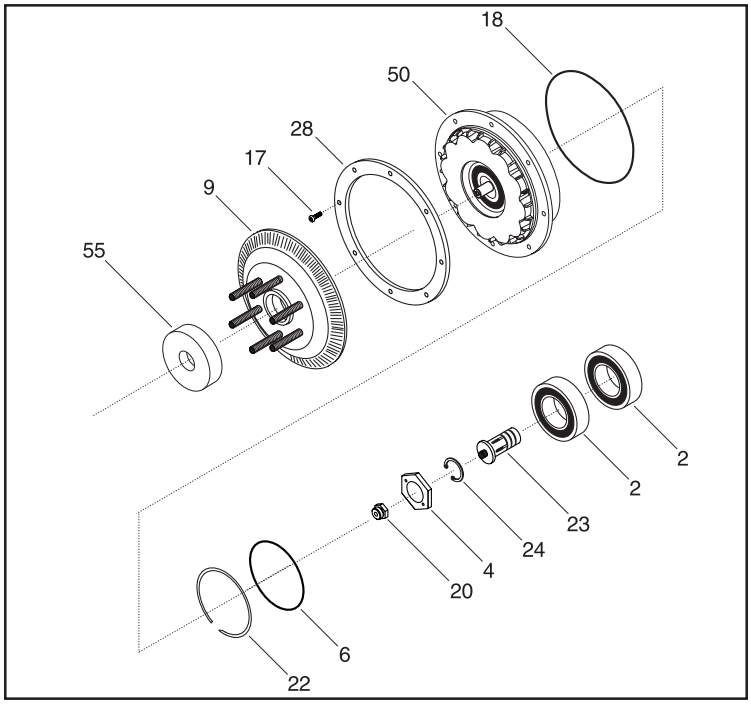

Spring Housing/Piston Assembly (#50): The spring housing/piston assembly is the internal mechanism that engages and disengages the DriveMaster fan drive when air pressure is either removed or applied.
Fan Mounting Disc (#9): The fan mounting disc is the part that the fan is bolted on to. It is also the part that contacts the friction liner when the fan drive is engaged. The fan mounting disc is screwed onto the jack bolt. Check the fan mounting disc for blistering or damage.
Friction Liner (#28): The friction liner is attached to the sheave on top of the spring housing assembly.
Sheave Bearings (#2): Use a bearing press to remove old bearings and install new bearings into the center of the sheave. The bearings are prelubricated and sealed. They are also contain markings that need to be aligned for proper installation. (If there are spacers in between the old bearings that were removed, reuse those spacers by positioning them between the new bearings before installation. Do Not remove the seals and attempt to lubricate the old or new bearings.)
Bearing Nut (#4): The bearing nut is used to hold the sheave onto the journal shaft.
Air Chamber Seal (#18)
O-Ring (#6)
Air Cartridge (#23)
Face Seal (#20)
Retaining Rings (#22, #24)
Button Head Screws (#17)
Cage Nut (#55)
T55 Torx Plus Bit (not pictured)
O-Ring Lubricant (not pictured)

DriveMaster Friction Disc Kit

Install a Friction Disc kit if the fan mounting disc is damaged from blistering, excessive wear, or failure. The Friction Disc kit consists of the parts listed and described below:

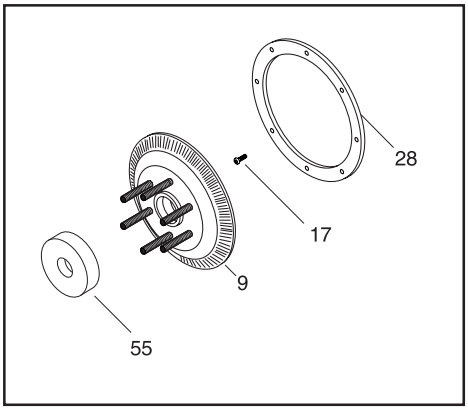

Fan Mounting Disc (#9)
Friction Liner (#28)
Button Head Screws (#17)
Cage Nut (#55)
T55 Torx Plus Bit (not pictured)

DriveMaster Friction Liner Kit (Part #994349)

Install a Friction Liner kit if the friction liner is worn. Check the fan mounting disc to make sure there is no excessive wear. If damage is evident use the DriveMaster Friction Disc kit. The Liner kit consists of the parts listed and described below:

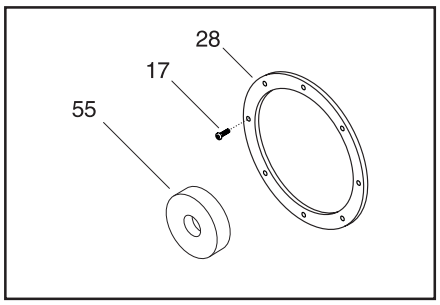

Friction Liner (#28)
Button Head Screws (#17)
Cage Nut (#55)
T55 Torx Plus Bit (not pictured)

DISASSEMBLING THE FAN DRIVE

Tools Required

- 2” Socket Wrench
- T55 Torx Plus Bit (994352)
- T27 Torx Bit
- Pry Bar
- Ring Pliers
- Screwdrivers

Disassembly

Fan Mounting Disc Removal and Inspection

1. Place the Fan Drive in a vise and clamp the Journal Bracket tight.

NOTE
Applying 80-120 PSI air pressure to the Fan Drive air inlet. This will aid in removal of the FMFD.

2. Loosen the Jack Bolt **(left hand thread)** by turning it counter-clockwise using a T55 Torx Plus Bit (Part# 994352).

NOTE
Use caution when handling the prybar on the Fan Mounting Disc. Permanent damage may occur if not properly supported. Best results are achieved with a flat blade tool like a Wonder Bar® or a prybar that has a handle.

NOTE
In CCW rotation applications, a jam nut will be installed over the threads of the jack bolt. This nut must be removed (left hand thread) before loosening the jack bolt.

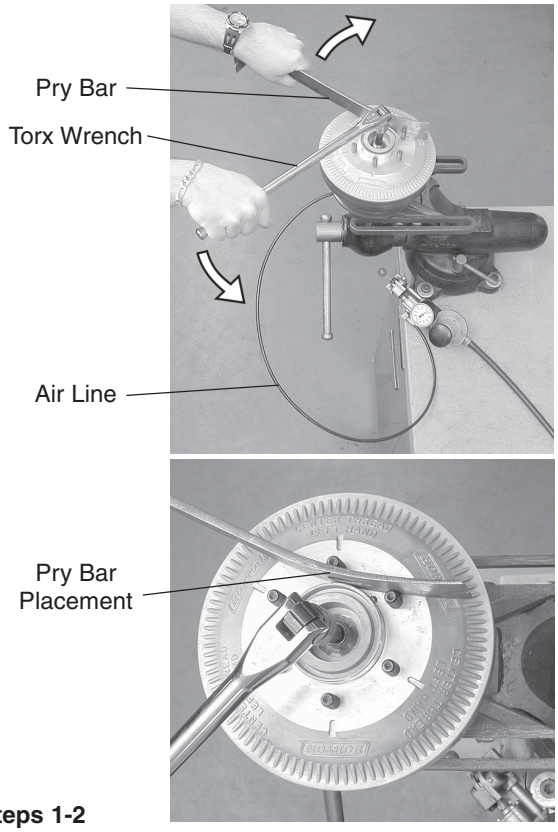

Steps 1-2

3. Unscrew the Fan Mounting Disc from the Jack Bolt. Inspect the Fan Mounting Disc for wear or damage. (See examples below)

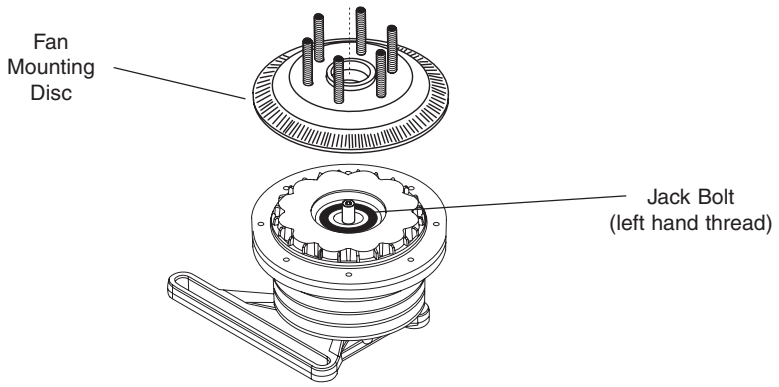

Step 3

Fan Mounting Disc
Good Condition

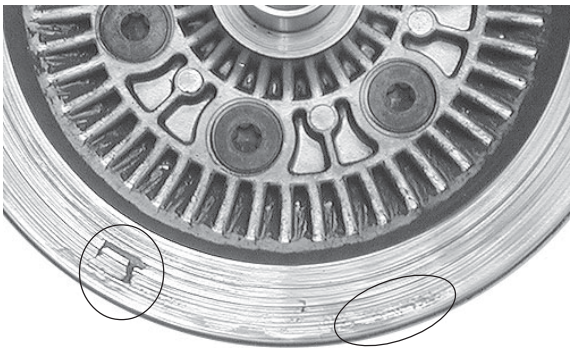

Look for signs of damage or blistering

Fan Mounting Disc
Bad Condition

Spring Housing/Piston Assembly Removal

4. Hand-tighten the Cage Nut (from the Repair Kit) onto the Jack Bolt **(left hand thread)** over the Spring Housing. The Cage Nut will keep the Spring Housing and Piston together as an assembly. It will also maintain pressure on the internal Springs after the Button Head Screws are removed.

⚠ WARNING

Remove air pressure from the unit before proceeding to Step 5.

⚠ DANGER

FAILURE TO RELEASE AIR PRESSURE MAY RESULT IN SERIOUS PERSONAL INJURY.

⚠ WARNING

Do not disassemble the Spring Housing. Personal injury could occur.

5. Remove the 8 Button Head Screws and the Friction Liner using a T27 Torx Bit.

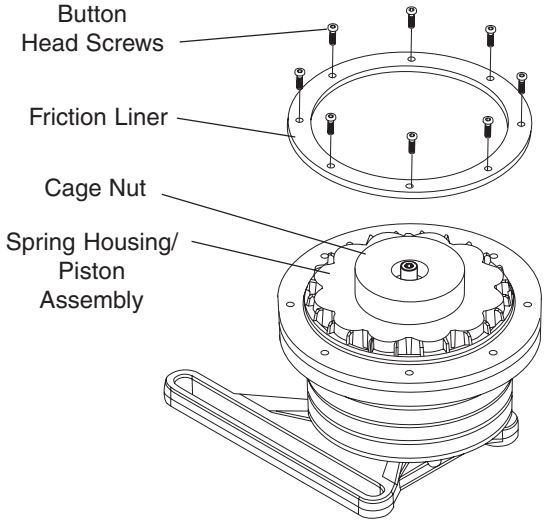

Steps 4-5

NOTE
If you are installing either a Friction Liner (Part# 994349) or Fan Disc Kit (Part# 994348), proceed to page 16, step 7.

6. Remove the Spring Housing/Piston Assembly.

7. Examine the inside of the Air Chamber for signs of moisture and/or contaminants.

⚠ WARNING
The Air Chamber should be clean and moisture-free (with the exception of the seal lubricant) . If not, a problem may exist in the vehicle air system and must be corrected before the Fan Drive is reinstalled.

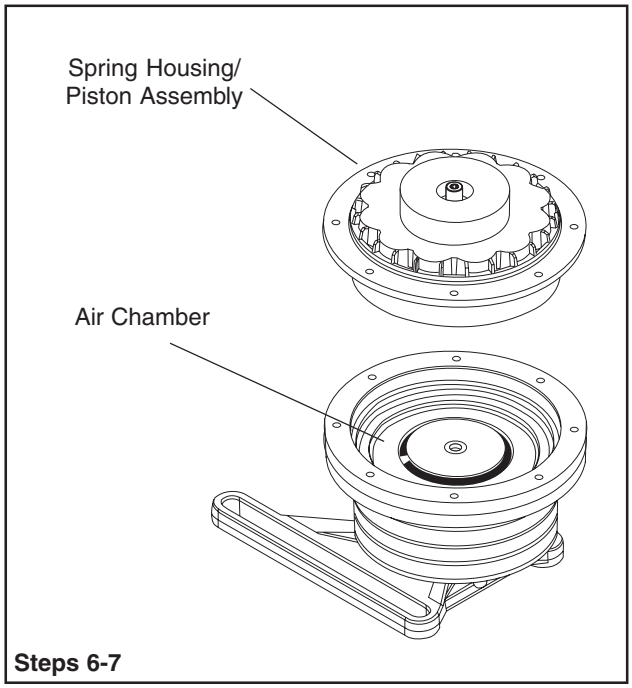

Steps 6-7

Air Chamber Seals

⚠ WARNING
Wear eye safety protection when removing Retaining Ring to avoid serious injury.

8. Remove the Air Chamber Cap Retaining Ring.

9. Gently and evenly pry the Air Chamber Cap out of the Sheave using two small screwdrivers placed 180° apart.

10. Remove the O-Ring Seal and Face Seal from the Air Chamber Cap.

11. Inspect the Face Seal for signs of wear. Wear indicates that dirt may exist in the air system.

⚠ CAUTION
If dirt or oil exists in the air system, the air system must be cleaned and dried before the Fan Drive is reinstalled.

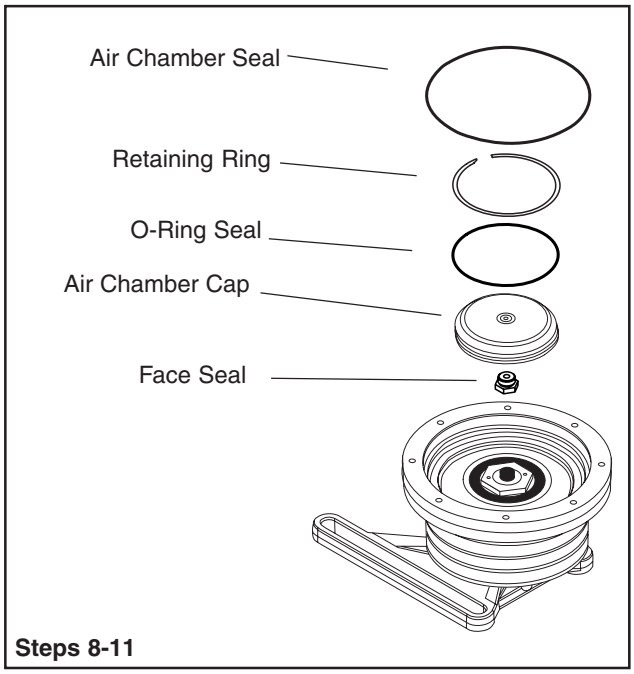

Steps 8-11

NOTE
If you are only installing a Seal Kit (Part #994346), proceed to page 14, step 1.

12. Remove the Bearing Nut from the Journal Bracket using a 2” Socket Wrench.

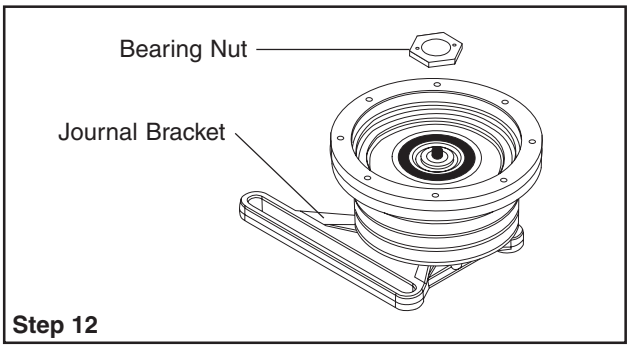

Step 12

13. Slide the Sheave and bearing assembly off the Journal Bracket.

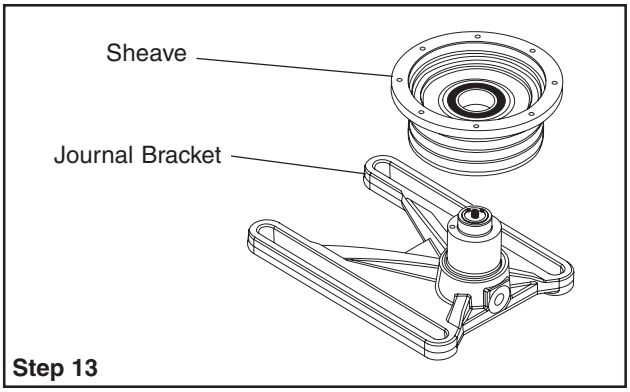

Step 13

TORQUE SPECIFICATIONS

ITEM	DESCRIPTION	TIGHTENING TORQUE
4	Bearing Nut	130 Ft. Lbs. [176 N•m]
12	Jack Bolt (left hand thread)	100 Ft. Lbs. [136 N•m]
17	Button Head Screws	80 In. Lbs. [9 N•m]
20	Face Seal	75-100 In. Lbs. [8.5-11.5 N•m]
51	Jam Nut	120 Ft-lbs [163 N•m]

Sheave Bearings

1. Fully support the Sheave and press the Bearings out of the Sheave.

NOTE
Some Models of the DRIVEMASTER Fan Drive contain Bearing Spacers. Both Bearing Spacers must be positioned BETWEEN the Sheave Bearings when the Sheave Bearings are replaced.

All Bearings are prelubricated and sealed. DO NOT remove the seals to lubricate the Bearings.

2. Fully supporting the Sheave, press the new Sheave Bearings (or single bearing) into place, noting the position of the lip inside the Sheave. See Figures 2A, 2B, 2C.

NOTE
Some DRIVEMASTER models utilize a single (one piece) Sheave Bearing. Repair with Kit #994353.

NOTE
When installing new bearings, you must press on the outer diameter ring of the bearing set to avoid damaging the bearing during installation.

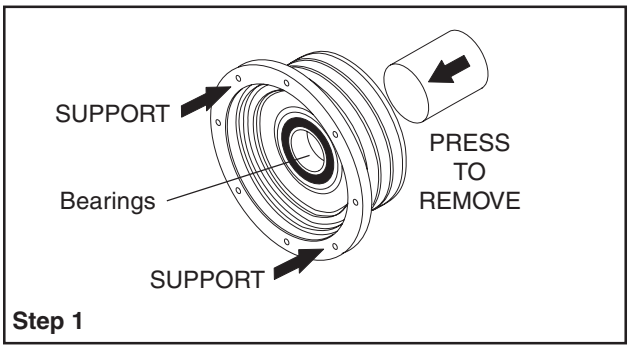

Step 1

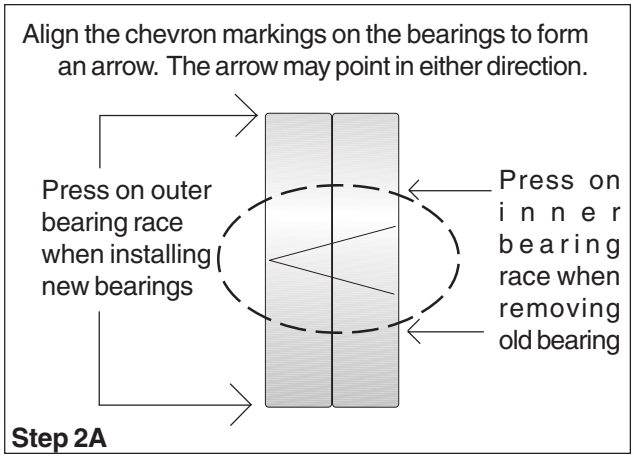

Step 2A

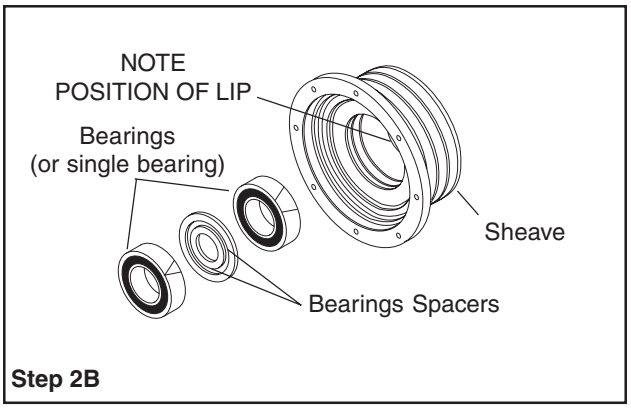

Step 2B

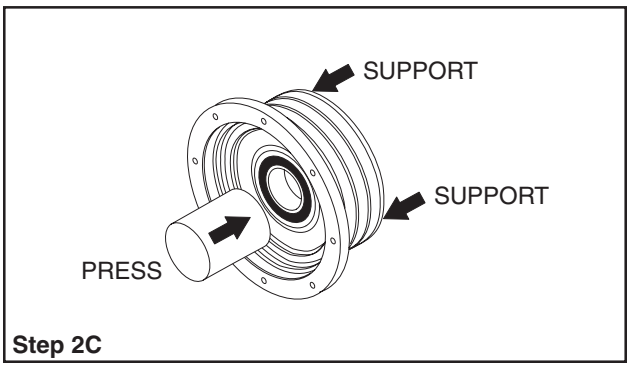

Step 2C

Air Cartridge

⚠ WARNING

Wear eye safety protection when removing Retaining Ring to avoid serious injury.

3. Remove the Retaining Ring.

4. Remove the Air Cartridge Assembly. Clean the Journal Bracket bore if necessary.

5. Apply O-Ring lubricant to the outside O-Rings of the new Air Cartridge Assembly.

6. Install the new Air Cartridge Assembly into the Journal Bracket.

7. Reinstall the Retaining Ring.

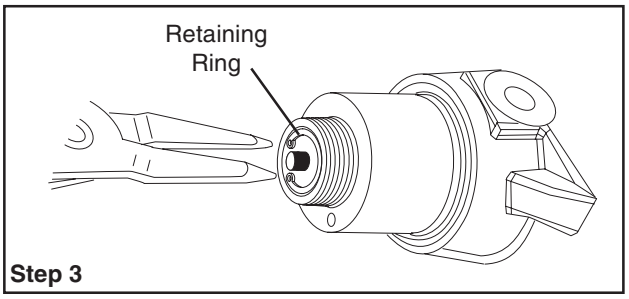

Step 3

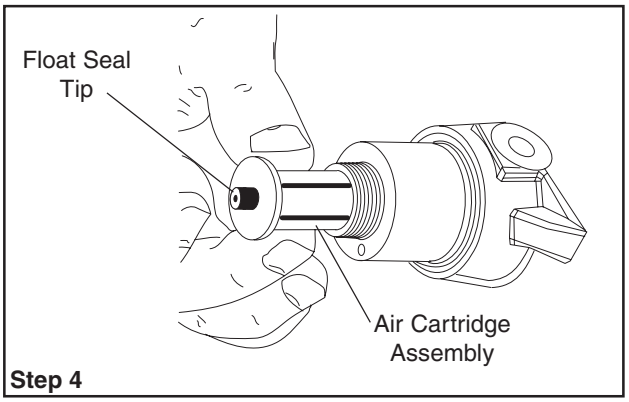

Step 4

⚠ CAUTION

The Retaining Ring must be fully seated in the retaining ring groove to keep the Air Cartridge Assembly from moving. Also, the Retaining Ring is beveled. The curved side must be installed facing the Cartridge.

NOTE

If you are installing a Seal Kit (Part# 994346), proceed to page 15, step 1.

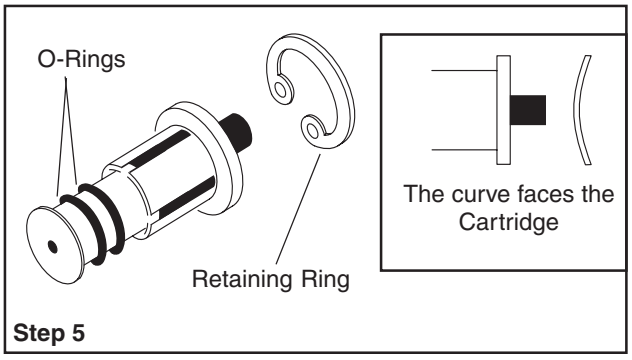

Step 5

Sheave Replacement

8. Slide the Sheave onto the Journal Bracket.

9. Replace and tighten the Bearing Nut to 130 Ft. Lbs. [170 N•m] torque. Be sure that the Bearing Nut hex is facing up (see detail below).

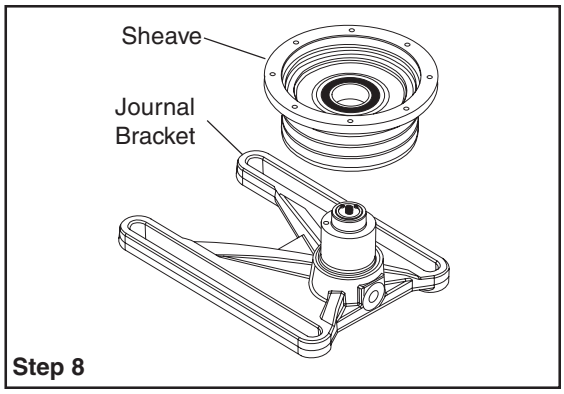

Step 8

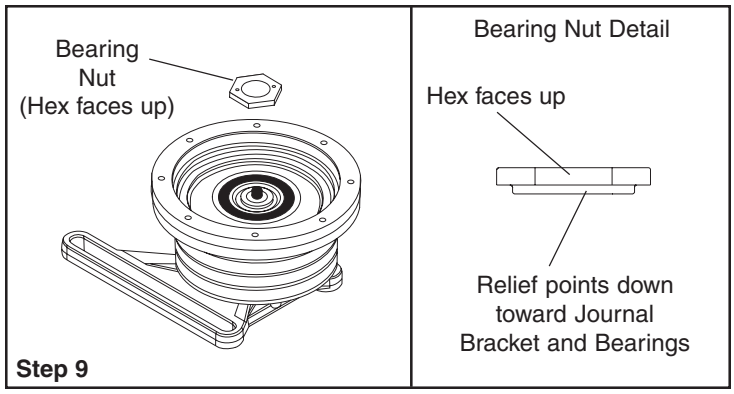

Step 9

Spring Housing/Piston Assembly Reassembly

⚠ CAUTION

Use extreme care when reassembling the Air Chamber components to avoid damage to the O-Ring and Air Chamber Seal.

10. Using a clean/dry cloth, clean both the Float Seal Tip (see Air Cartridge illustration, Step 4) of the Air Cartridge Assembly as well as the Face Seal of the Air Chamber Cap. Use care not to scratch seal surfaces.

NOTE

The new Face Seal is assembled with an O-ring. If the old Face Seal does not have an O-ring, remove it from the new Face Seal and apply thread sealant (Loctite® 511 or similar) to the Face Seal threads.

11. Assemble the Air Chamber Cap and Face Seal. Lubricate the O-ring Seal with the fresh lubricant supplied in the kit and install it on the Air Chamber Cap.

12. Carefully set the Air Chamber Cap into the Sheave and install the Retaining Ring.

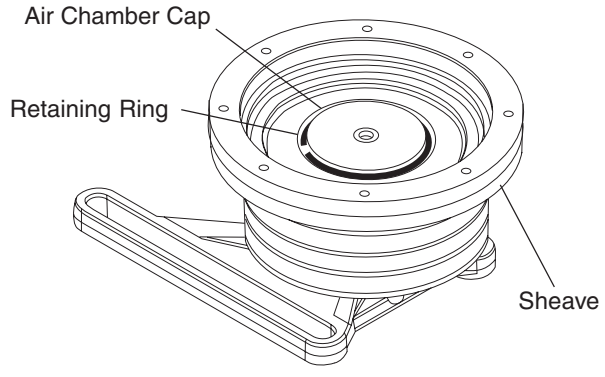

Steps 11-12

13. Lubricate the Air Chamber Seal and contact surfaces with the fresh lubricant supplied in the kit.

NOTE

The entire tube of O-Ring lubricant should be used when lubricating the new seals and contact surfaces of the Sheave and Spring Housing/Piston Assembly.

⚠ CAUTION

Do not apply grease beyond Seal contact surface as it will cause improper Fan Drive function.

14. Install the Air Chamber Seal into the Sheave as shown. Be sure the Seal is evenly seated against the side and bottom of the groove surfaces.

15. Carefully set the new Spring Housing/Piston Assembly from the Repair Kit into position. Gently rotate to align the mounting holes in the assembly with the Sheave.

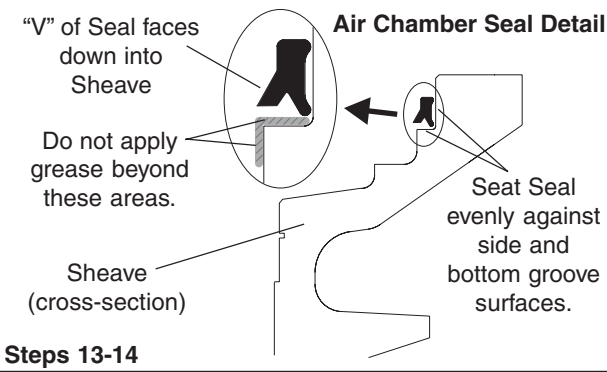

Steps 13-14

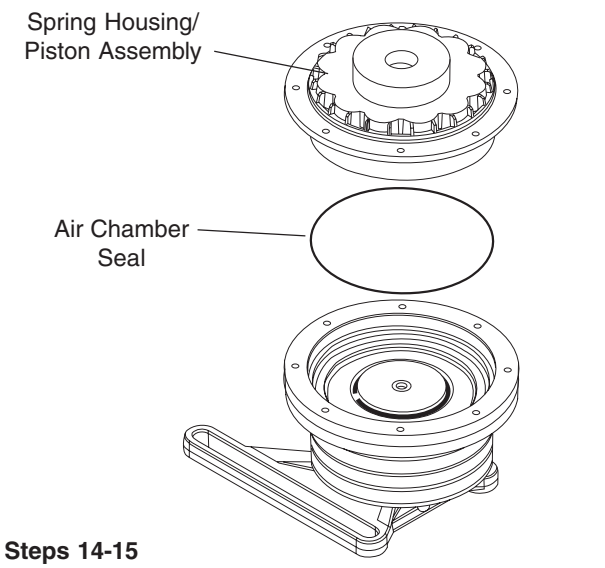

Steps 14-15

16. Set the new Friction Liner (from kit) into place. Handle the Friction Liner by the edges to avoid contamination.

17. Alternately and evenly tighten the 8 Button Head Screws to 80 In. Lbs. [9 N•m] torque.

⚠ WARNING

To avoid personal injury, make sure the Button Head Screws are properly tightened to the specified torque before applying air pressure - 80 In. Lbs. [9 N•m].

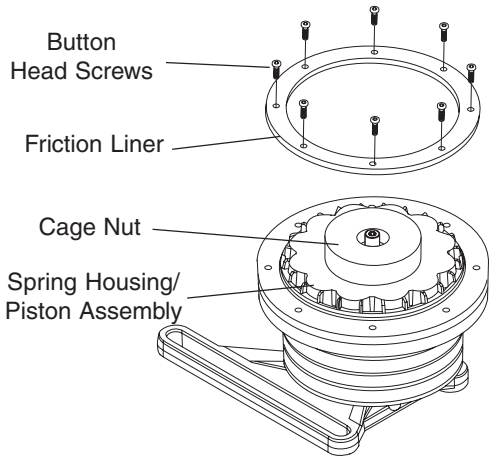

Steps 16-17

Fan Mounting Disc Reassembly

18. Apply a minimum of 80 lbs. PSI of clean air to the air inlet.

NOTE

Air must be applied to the air chamber to allow for easy removal of the Cage Nut and to ensure proper torque is applied to the Jack Bolt.

19. Remove the Cage Nut from the Spring Housing/ Piston Assembly.

20. Install the new Fan Mounting Disc (from kit) if applicable.

⚠ WARNING

Do not disassemble the Spring Housing. Personal injury could occur.

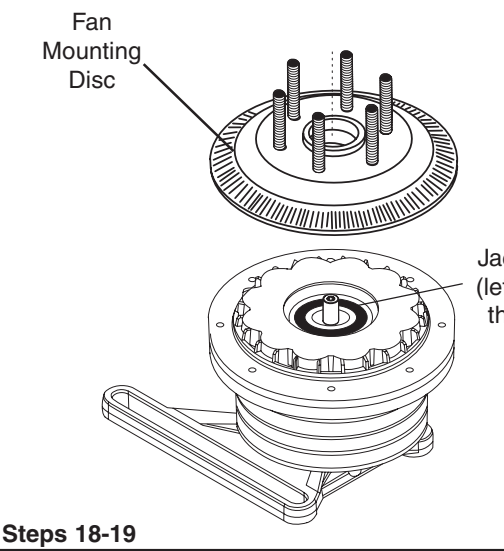

Steps 18-19

21. Tighten the Jack Bolt **(left hand thread)** to 100 Ft. Lbs. [136 N•m] torque.

22. If a jam nut was present, apply Loctite® 204 (or equivalent) to the threads, reinstall over the jack bolt (left hand thread) and tighten to 120 Ft. lbs [163 N•m] torque.

23. Actuate the DriveMaster and check for proper engagement and disengagement of the Fan Mounting Disc. Check for air leaks at the bleed hole and around the Spring Housing/Piston Assembly.

⚠ CAUTION

If a problem exists, it must be corrected prior to mounting the Fan Drive onto the vehicle. If the problem is not corrected, the Fan Drive will fail prematurely.

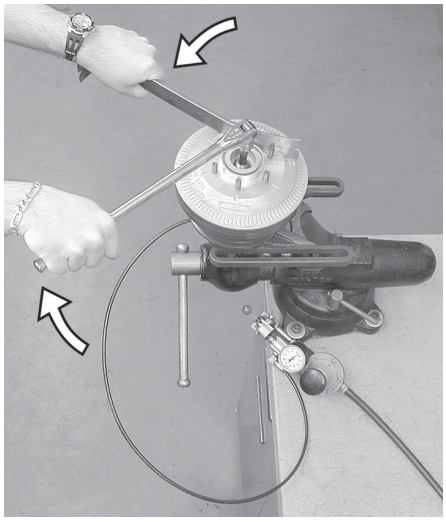

Steps 20-22

REINSTALLING THE FAN DRIVE

⚠ WARNING

On the workbench, apply 90 psi [6.21 bar] clean air pressure and check the Fan Drive for air leaks.

1. Be sure the vehicle ignition is off, the vehicle's parking brake is applied, and the vehicle's wheels are blocked.

NOTE
Protect the radiator from possible damage from the fan during fan removal and fan drive installation.

2. Clean the Fan Drive mounting surface on the engine.

NOTE
Most engines have multiple mounting locations. Be sure to use the correct holes for the application.

3. Bolt the Fan Drive to the engine. Use flat washers on each manufacturer's approved bolt or studs - **DO NOT use lock washers.** Tighten the mounting bolts to the vehicle manufacturer's specifications.

⚠ CAUTION

Correct belt adjustment and alignment is necessary for all belt driven components to assure longevity of component life. Over tightening of belts will shorten bearing life. Loose belts will cause excessive belt wear and shorten bearing life. Consult the equipment manufacturer and/or engine manufacturer specifications for proper belt adjustment.

4. Replace and tighten the belts to manufacturer's specification.

⚠ WARNING

The maximum fan diameter is 32''.
If a larger fan diameter is required, contact Horton at 1-800-621-1320.

5. Check the fan for cracks or missing weights; then, remount the fan on the Fan Drive. Tighten the bolts and/or nuts to the vehicle manufacturer's specifications.

6. Start the engine and let the air pressure build to at least 90 psi [6.21 bar]. Turn off the engine.

7. Manually engage and disengage the Fan Drive by opening and closing the electrical circuit going to the solenoid valve. For a normally-open electrical system, use a jumper across a sensor. For a normally-closed electrical system, open the circuit by disconnecting a sensor wire. With the Fan Drive engaged, recheck the entire system for air leaks, or activate the manual override switch (if equipped).

TROUBLESHOOTING

PROBLEM	PROBABLE CAUSE	SOLUTION
I. Air leaking from Fan Drive bleed hole	1. Bad seals or air cartridge. 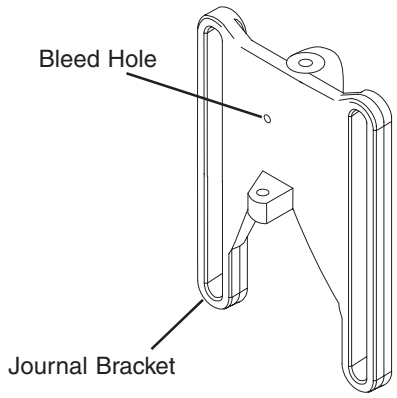 	1. Install Repair Kit.
II. Premature Friction Lining failure		
1. Obstructed fan.	1. Loose shroud, bent fan, torn engine mounts, etc.	1. Find and remove obstruction, repair or replace damaged parts. Install Repair Kit.
2. Low air pressure to Fan Drive.	2 a. Restricted air line. b. Restricted Solenoid Valve. c. Low system air pressure. d. System air leak.	2. a. Replace air line. Install Repair Kit. b. Replace Solenoid Valve. Install Repair Kit. c. Repair system. Install Repair Kit. d. Repair leak. Install Repair Kit.
3. Excessive cycling.	3. a. A/C freon overcharge. b. A/C pressure switch setting too low. c. Poor ground or wire connection. d. Improper temperature control setting. e. Faulty ECM.	3. a. Check and adjust to specifications. b. Check A/C pressure switch. c. Check electrical connections. d. Check temperature setting of all controls. Thermal Switch setting should engage the Fan Drive 10°F higher than the full open temperature of the thermostat. e. Check ECM.

PROBLEM	PROBABLE CAUSE	SOLUTION
II. Premature Friction Lining failure 3. Excessive cycling (continued)	f. Faulty Thermal Switch. g. Restriction in front of radiator blocking air flow. h. Faulty Air-Temp Switch. **Air Problem** 1. Solenoid Valve not exhausting or engaging properly.	f. Replace the Thermal Switch. g. Check for proper shutter operation, winter front or other restriction in or in front of the radiator. h. Replace the Air-Temp Switch. 1. Check for plugged exhaust/ intake port on the Solenoid Valve. Clean or replace the Solenoid Valve.
III. Fan Drive fails to engage/disengage	**Electrical Problem** 1. Open/shorted circuit. 2. Improperly wired. 3. Thermal Switch incorrect for application. 4. Failed Solenoid Valve. **Air Problem** 1. Air line restricted. 2. Solenoid Valve defective. **Piston will not actuate** 1. Piston seized due to contamination or dry seals.	1. Check electrical connections. 2. Check wiring according to diagram. 3. Check Thermal Switch application. Replace if wrong or defective. 4. Replace the Solenoid Valve. 1. Check air line from solenoid to Fan Drive for kinks or obstructions. 2. Replace the Solenoid Valve. Check to see if air exhaust is restricted. 1. Clean the air supply and install a Rebuild Kit.

PROBLEM	PROBABLE CAUSE	SOLUTION
IV. Fan Drive cycles frequently	**Electrical Problem** 1. Poor ground wire connection. 2. Improper temperature control settings. 3. A/C Pressure Switch setting too low. 4. Restriction in front of radiator, blocking air flow. 5. Faulty Thermal Switch. 6. Faulty Air-Temp Switch. 7. Vehicle Coolant level too low.	1. Check electrical connections. 2. Check temperature setting of all controls. Thermal Switch should engage the Fan Drive 10° F higher than the full open temperature of the thermostat. 3. Check A/C Pressure Switch. Use higher switch. 4. Check shutter operation, winter fronts, or obstruction in front of radiator. 5. Replace the Thermal Switch. 6. Replace the Air-Temp Switch. 7. Fill to manufacturer's recommended level.
V. Fan Drive engaged, engine running hot.	1. Restriction in front of radiator. 2. Fan capacity not large enough. 3. Problem in cooling system.	1. Make sure nothing is obstructing the air flow through the radiator. 2. Refer to specifications. 3. Refer to engine manual.