MOTORES

MWM

BRASIL

MWM ACTEON

Troubleshooting Manual

Sample

MOTORES

MWM

BRASIL

MWM ACTEON

Troubleshooting Manual

MWM *INTERNATIONAL* MOTORES DIESEL LTDA.

Av. das Nações Unidas, 22.002
ZIP CODE 04795-915 - São Paulo - SP - Brasil

Internet: www.mwm.com.br
E-mail servicos@mwm.com.br

Engines Sales
Phone: 55 (11) 3882-3318 / 3249 / 3541 - Fax: 55 (11) 3882-3573 / 3576
Spare Parts
Phone: 55 (11) 3882-3323 / 3441 - Fax: 55 (11) 3882-3594

Service Departament
Phone: 55 (11) 3882-3600 - Fax: 55 (11) 3882-3574

In Brazil Customer Assistance (Free call) - 0800-110229

9.612.0.006.7260 - 08/2004

Printed in Brazil

Produced by: ASC Comunicação Técnica

INTRODUCTION 3
IMPORTANT REMARKS 4
GENERAL PRECAUTIONS 6
WARNING LIGHTS AND FAULT CODE 8
DESCRIPTION OF SENSORS AND ACTUATORS 10
PCodes x Blinking Code 35

INTRODUCTION

This Troubleshooting Manual refers to MWM ACTEON engines and presents information about procedures for fault analysis, inspections and measurements.

It was conceived for using at workshops perfectly equipped with special tools and trained personnel.

MWM Motores Diesel Ltda. reserves the right of doing any product modification at anytime without incurring in any obligation.

Manual de

MWM *International* Motores Ltda.
Services Department
Av. das Nações Unidas, 22.002 - Santo Amaro
ZIP CODE 04795-915 - São Paulo - SP - Brasil
PHONE: +55(11) 3882-3513 / 3305
Fax: +55(11) 3882-3574 / 3587
DDG: 0800-110229

Site: www.mwm.com.br
E-mail: servicos@mwm.com.br

IMPORTANT REMARKS

Attention

Before starting reparation of on engine using electronic measurement equipment, it is important to know the Diagnostic Manual and its safety instructions for correct operation of equipment. Our objective is to eliminate all doubts about operation of special equipment in relation with user's safety, protection of his (hers) physical integrality and, this way, avoiding damage to electronic equipment.
The handling of diagnosis equipment shall be done by capable professionals, previously trained and enabled for the various activities involving the electronic system reparation.

Copyright

The authoring rights (copyright) about the software and its data are property of MWM Motores Diesel Ltda. or of our suppliers and are protected against unauthorized reproduction according to Copyright Law or other legal provisions in effect.
Partial or integral reproduction of data and software is an illegal practice and transgressors will be penalized according to the law. In case of violation of assured rights, MWM Motores Diesel Ltda. reserves the right of prosecution of and demanding responsible people for indemnification.

Responsibilities

The data available within electronic program are based on information supplied by the engine manufacturer.
MWM Motores Diesel Ltda. does not take responsibility on correction and integrality of software and information presented in it nor damage caused by fault or error on software and/or data either. Responsibility of MWM Motores Diesel Ltda. is limited to the acquisition of this product by means of MWM authorized dealership.
Operation of diagnosis equipament will occur only by means of programs released by MWM and its authorized suppliers.
If case of operation of MWM diagnosis equipment with another program of unknown origin, all rights of warranty claiming firmed on product supplying agreements, as well as for direct or indirect damage caused by usage of unknown systems will be canceled.

SAFETY INFORMATION

- Connect all test equipment only at receptacles correctly protected and grounded;
- Use connection cables provided with the diagnosis tools case;
- Use extensions with protected contacts;
- Replace electrical cables presenting damaged insulation;
- Connect all analysis tools first to electric network. Only then connect them to vehicle;
- Connect the analysis tool to engine ground or battery ground before proceeding engine ignition;
- Repairing on engine's electrical part (connection of diagnosis apparel, electronic components replacement, disassembling of electric components as starter motor and alternator, connection to test bench) shall occur only with ignition off;
- If possible, operate the test and diagnosis tools only with ignition off or the engine stopped;
- In case of testing and adjusting procedures with ignition on or running engine, never touch voltage conductive components. This procedure shall be followed for connection of diagnosis apparel and also for connection to test benches;
- Use the connections for testing with appropriate tools;
- Check the correct fitting of test connectors in order to assure a perfect connection;
- Never open the measurement equipment case.

GENERAL PRECAUTIONS

Precautions Relative to Respiratory System

Gas collector hoses are used for measurement of exhaust gas emissions. If heated above 250°C, or in case of fire, these hoses emanate a highly toxic gas (hydrogen fluoride) that may attack the respiratory apparel.

In case of inhalation of a toxic substance, seek for medical help immediately!

Skin Precautions

Use individual self-protection equipment (neoprene or PVC gloves) when manipulating residues from combustion or cleaning of components.
For neutralizing these residues, use a solution of calcium hydroxide that forms non-toxic calcium fluorides that could be washed later.
Alkaline and acidic solutions from battery can generate fluorine acid when mixed with water, causing severe skin burnings.

In case of contact with skin:

- Wash contaminated body parts immediately with abundant neutral soap and water. After that, seek for medical help; clothing should also be washed in case of contamination.
- In case of breakage and consequent leakage of liquid crystal display from measurement and diagnosis equipment, avoid contacting body parts. Avoid inhalation and ingestion of it.

Precautions Against Asphyxiation

Vehicular pollutants emissions contain gases as carbon monoxide (CO), an uncolored and odorless gas. If inhaled, it causes an oxygen deficit to the organism. Never let the engine running inside closed and non-ventilated areas. Use individual self-protection equipment (respirators) when working inside shop pits, as elements from exhaust gas are heavier than air and build up on the ground.

Precautions Against Smashing

Engines installed at functional benches have yellow shields that insulate the moving parts (fan, flywheel, etc.), which that could cause severe wounding on hands and arms.
Transportation equipment has a wheel-locking device that avoids undesired movements.
Take special care regarding moving parts on running engines.
Note the location of electric harnesses on ground and power network cabling in order to avoid dowr falls due to entanglements.

Precautions:

- If it is necessary to work underneath the vehicle, always support it on proper safety stands. A jack is not appropriate for this purpose. Check that vehicle is on leveled ground with blocked wheels. Remove the key from ignition switch;
- Take extreme care about long hair, ties, large clothes, jewelry, etc. that could be entangled on any moving or fixed part of the engine or vehicle.

Burning Precautions

Servicing on proximities of hot engine parts like exhaust manifold, turbocharger, etc, offers a high risk of burning.
These components can achieve high temperatures. Before proceeding on any repair, use self-protection equipment (insulating gloves) and assure that the engine is already cold. When starting reparation procedures, note the location of electric cables near hot areas.

⚠

Attention The engine shall be running only during the time needed for execution of tests and adjustments.

Explosion and Fire Precautions

The fuel system works under high pressure and some precautions shall be taken to avoid an explosion of incorrectly fitted components and a fire due to fuel leakage.

Special Precautions:

- Disconnect the negative cable from battery when servicing engine's electric system;
- Do not smoke and stay away from flames or hot spots. Have a fire extinguisher at nearby;
- Work at an open and well ventilated area for dispersion of toxic gases.

Noise Precautions

When working inside closed rooms, noise levels could exceed the limits tolerated by human beings (70 dB). These levels could damage to auditory system if sustained for a certain period of time.

⚠

Attention Use self-protection equipment (ear protectors, ear mufflers) when operating at closed rooms.

WARNING LIGHTS AND FAULT CODE

The MWM ACTEON engine informs possible faults on its components or systems by means of warning lights on panel.

	The red light indicates that a severe fault is occurring. If the red light turns on when vehicle is running, it is necessary to stop it as soon as possible according to traffic condition.
After enlightened, the protection system may begin to reduce the engine power, that is, the engine begins to lose power until it reaches a working regimen not prejudicial to its components lifespan.	
	The yellow light indicates occurrence of a less severe failure. If it turns on when vehicle is running, it is not necessary to stop the vehicle immediately, but the occurrence shall be checked as soon as possible.

Indication of Fault Codes by Blinking (VW Application)

The red warning light informs the fault code by means of its blinking.
To check the fault code, do the following procedures:

1. Vehicle must be stopped;
2. Turn ignition key to ON position (do not start the engine);
3. Connect the two free connectors at the electric module as shown below

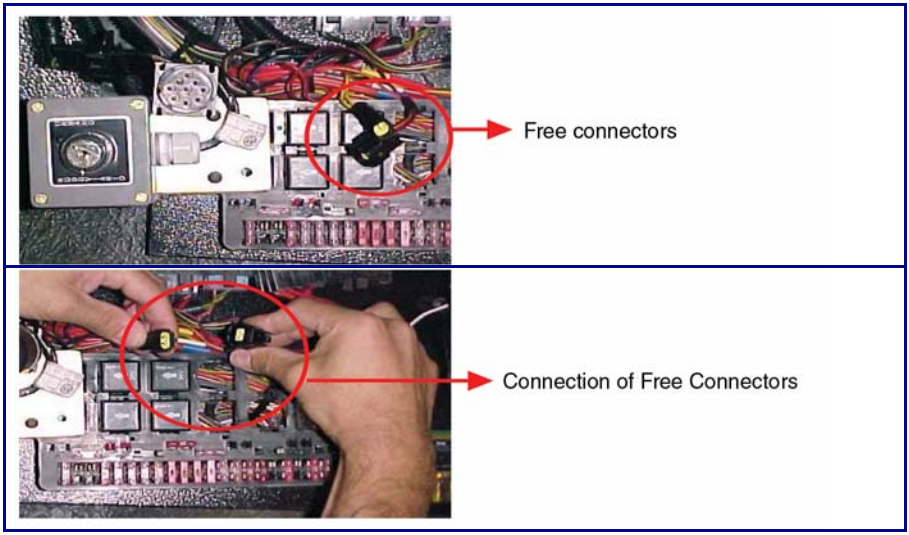

In case of any fault, the red warning light will blink the fault code.

How to identify a Fault (VW Application)

An intermittent blinking on the red light indicator identifies a fault on the engine.
Example: fault code 23

The red light will blink twice to indicate number 2 and then it will blink three times for number 3. Using the blinking list from Troubleshooting Manual, check the fault occurring at engine.

To check other fault codes on ECM's memory, disconnect the free connectors and connect them again.

If there is another fault code, the red lamp will blink again indicating a new fault by blinking.

If there is not any other fault on ECM's memory, the previous fault (23) will be indicated again.

How to identify a Fault (Agrale Application)

	The yellow light indicates occurrence of a less severe failure. If it turns on when vehicle is running, it is not necessary to stop the vehicle immediately, but the occurrence shall be checked as soon as possible.

The engine fault is identified by means of a yellow indicator on panel that lights on continuously while a fault is recorded on ECM's memory.

For any indication of engine fault, the yellow lamp will turn on at the panel.

Use the ODB 9-way connector located below instruments panel to check the fault.

DESCRIPTION OF SENSORS AND ACTUATORS

Pins identification on sensors connectors attends to OBD standards that determine reading pins from right to left side. Numbering order is based on the Locking-pin located on top of sensor connector.

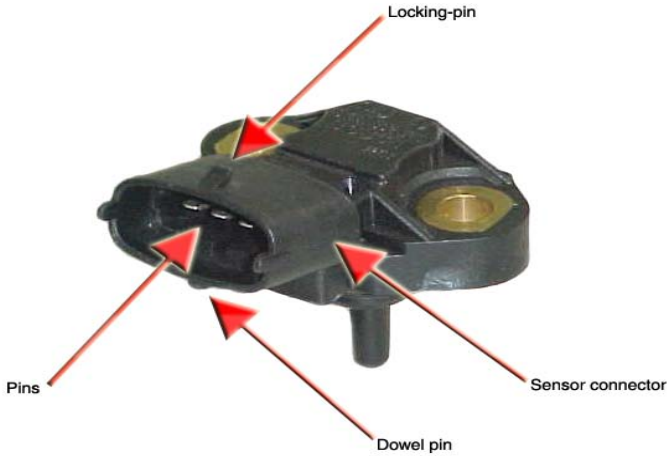

So, reading and identification of pins on a connector is done according to the following:

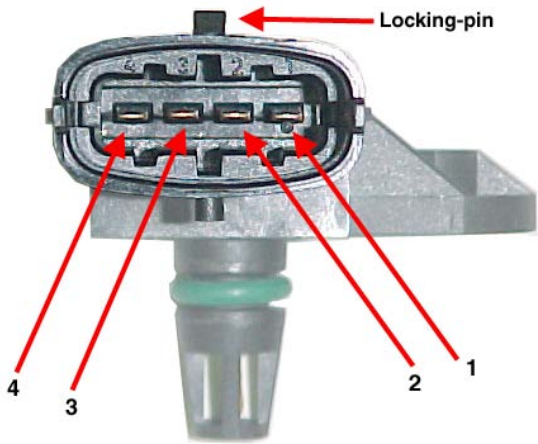

The reading of sensor's electric diagram follows the order:

A) Two-pin sensor:

ENGINE COOLANT TEMPERATURE SENSOR

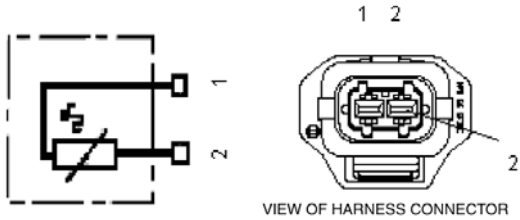

B) Three-pin sensor:

CRANKSHAFT SENSOR AND CAMSHAFT SENSOR

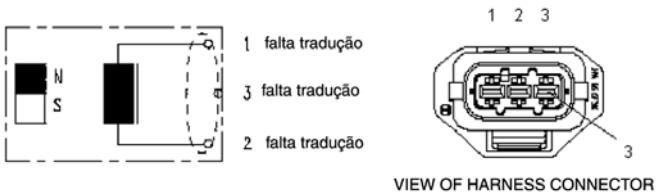

RAIL FUEL PRESSURE SENSOR

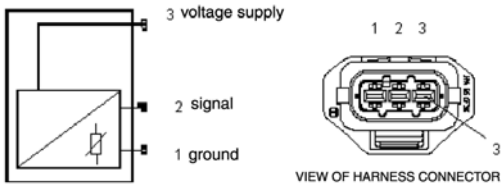

C) Four-pin sensor:

INTAKE MANIFOLD TEMPERATURE AND PRESSURE SENSOR
LUBRICATING OIL TEMPERATURE AND PRESSURE SENSOR NTC

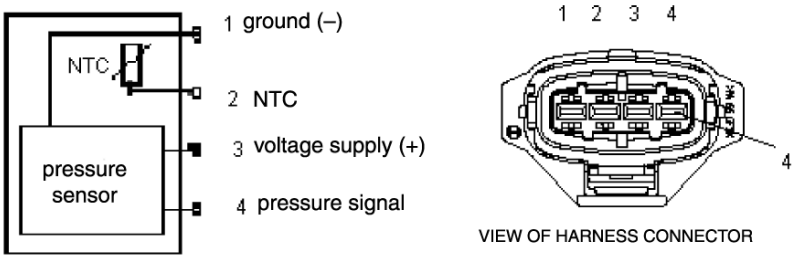

Side View - Fuel System Side

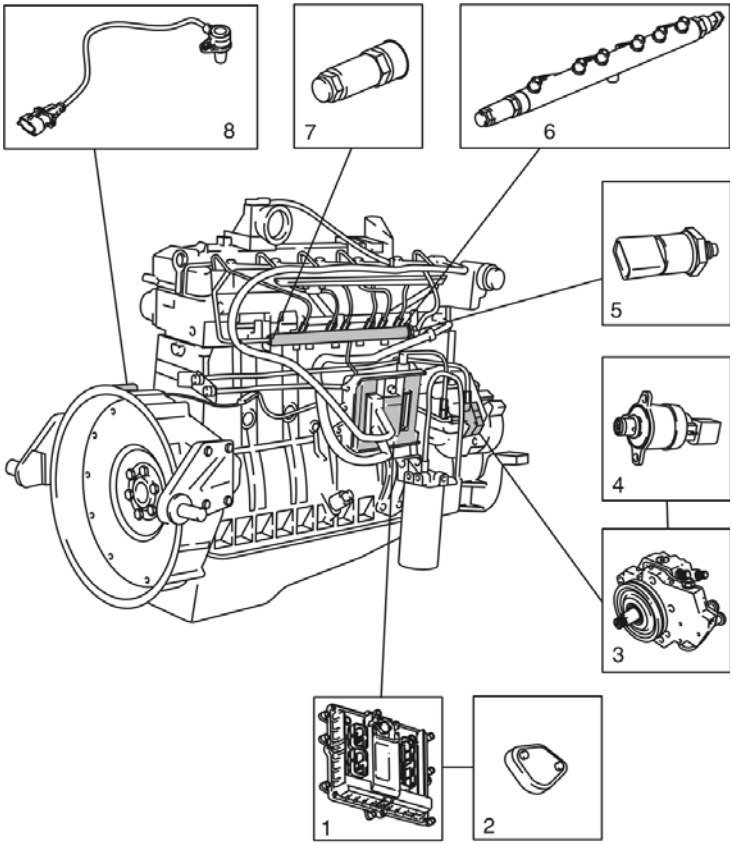

1 - ECM

2 - Atmospheric Pressure Sensor

3 - High Pressure Pump

4 - Fuel Electronic Control Actuator

5 - Rail Pressure Sensor

6 - Common Rail (Rail)

7 - Rail Pressure Limiter Valve

8 - Flywheel Rotation Sensor

Side View - Intake and Exhaust Side

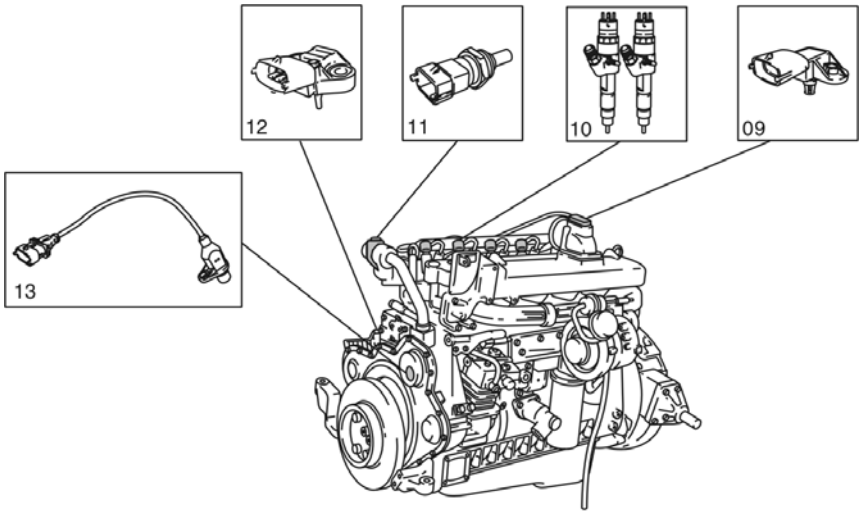

09 - Air Pressure and Temperature Sensor

10 - Fuel Injector Actuators

11 - Engine Coolant Temperature Sensor

12 - Engine Oil Pressure and Temperature Sensor

13 - Camshaft Phase Sensor

Side View - Engine Electric Harness

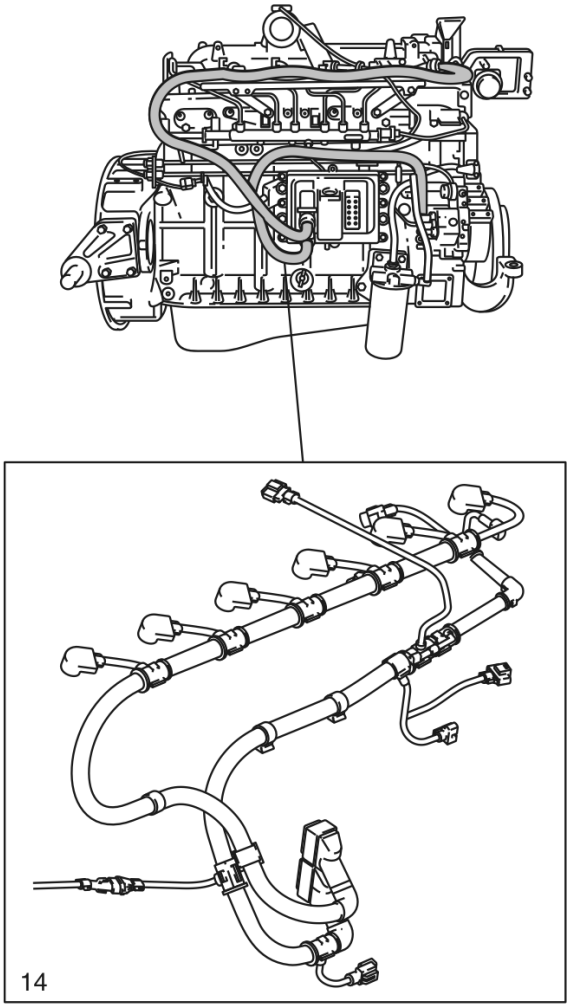

14 - Electric Harness

Engine Electric Harness Connectors

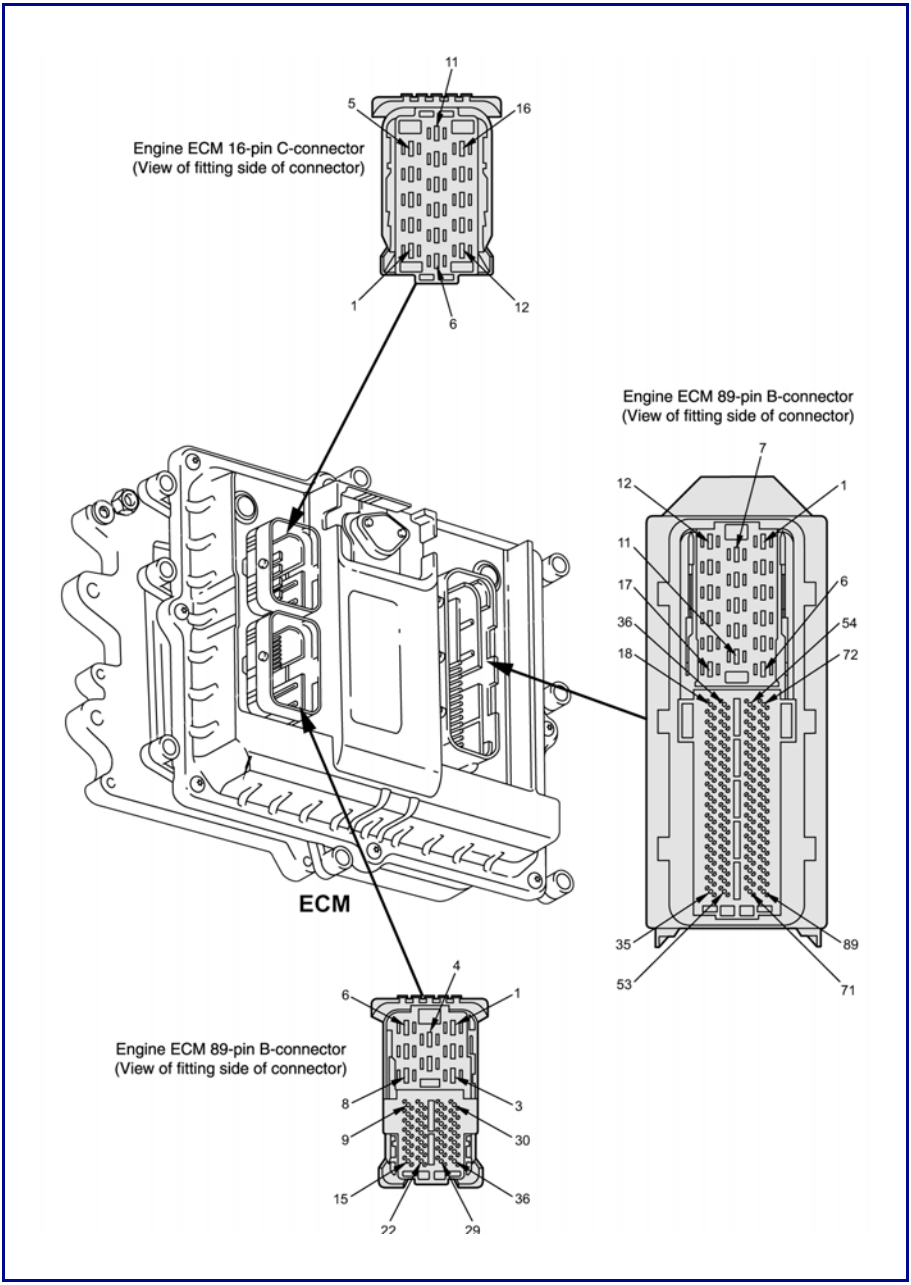

Special Remarks for Diagnostics Verification:

1. Always use proper probes in order to reduce any chance of damaging the connector pins;
2. When checking short-circuit to ground, proceed as follows:

   2a . Turn ignition switch off;

   2b. Disconnect the connectors you want to check. For testing a sensor, disconnect the harness connector; for testing a harness connector from ECM, disconnect also the connector(s) from sensor or sensors;

   2c. Identify the pins to be checked;

   2d. Visually inspect the pins;

   2e. Adjust the multitester for resistance checking;

   2f. Place the multitester probe on the pin to be verified and touch the engine block with the other probe.
3. Check for corrosion signs, bent pins or moisture presence on sensor or harness connector that could potentially cause the engine to failure;
4. 4. Inspect the fuel injector wire harness terminal nuts and check that there is no short circuit to ground between the wires and any metallic part near cylinder head cover that could generate failures on engine; after assembling the wire harness, tighten the nuts properly;
5. 5. Check battery condition (oxidized poles/cable terminals, cabling with damaged insulation, or low charge) that could generate failures on engine;
6. 6. Check the alternator's voltage regulator that, in case of abnormal function, could generate an excessive or insufficient charge for the battery, causing failures on engine; the battery voltage shall be within the parameters specified by the vehicle manufacturer.

P0016 41
P0087 43
P0088 45
P0094 47
P0105 49
P0106 51
P0107 53
P0108 55
P0111 57
P0112 59
P0113 61
P0115 63
P0116 65
P0117 67
P0118 69
P0121 71
P0122 73
P0123 75
P0190 77
P0191 79
P0192 81
P0193 83
P0196 85
P0197 87
P0198 89
P0199 91
P0201 93
P0202 95
P0203 97
P0204 99
P0205 101
P0206 103
P0235 105
P0236 107
P0237 109
P0238 111
P0261 113
P0262 115
P0264 117
P0265 119
P0268 123
P0270 125
P0271 127
P0273 129
P0274 131
P0276 133
P0277 135
P0335 137
P0336 139
P0340 141

P0500 143
P0501 145
P0502 147
P0503 149
P0510 151
P0520 153
P0521 155
P0522 157
P0523 159
P0524 161
P0560 163
P0561 165
P0562 167
P0563 169
P0571 171
P0606 173
P0685 175
P0686 177
P0687 179
P0688 181
P0689 183
P0690 185
P0704 187
P1002 189
P1003 191
P1004 193
P1005 195
P1006 197
P1007 199
P1008 201
P1087 203
P1088 205
P1090 207
P1091 209
P1092 211
P1093 213
P1094 215
P1095 217
P1096 219
P1097 221
P1115 223
P1116 225
P1117 227
P1118 229
P1119 231
P1122 233
P1123 235
P1190 237
P1192 239
P1193 241

P1194 243
P1201 245
P1202 247
P1203 249
P1204 251
P1204 253
P1206 255
P1237 257
P1238 259
P1280 261
P1281 263
P1282 265
P1283 267
P1500 269
P1501 271
P1522 273
P1523 275
P1556 277
P1557 279
P1558 281
P1561 283
P1562 285
P1563 287
P1564 289
P1565 291
P1604 293
P1605 295
P1614 297
P1615 299
P1640 301
P1641 303
P1642 305
P1650 307
P1651 309
P1652 311
P1691 313
P1692 315
P2265 317
P2269 319

Rotation Sensor (Camshaft) 41
Fuel Pressure Sensor (Rail) 43
Fuel Pressure Sensor (Rail) 45
Fuel Pressure Sensor (Rail) 47
Barometric Sensor 49
Barometric Sensor 51
Barometric Sensor 53
Barometric Sensor 55
Air Temperature Sensor on Intake Manifold 57
Air Temperature Sensor on Intake Manifold 59
Air Temperature Sensor on Intake Manifold 61
Engine Coolant Temperature Sensor 63
Engine Coolant Temperature Sensor 65
Engine Coolant Temperature Sensor 67
Engine Coolant Temperature Sensor 69
Accelerator Pedal Sensor 71
Accelerator Pedal Sensor 73
Accelerator Pedal Sensor 75
Fuel Pressure Sensor (Rail) 77
Fuel Pressure Sensor (Rail) 79
Fuel Pressure Sensor (Rail) 81
Fuel Pressure Sensor (Rail) 83
Lubricating Oil Temperature Sensor 85
Lubricating Oil Temperature Sensor 87
Lubricating Oil Temperature Sensor 89
Lubricating Oil Temperature Sensor 91
Fuel Injector on Cylinder #1 93
Fuel Injector on Cylinder #2 95
Fuel Injector on Cylinder #3 97
Fuel Injector on Cylinder #4 99
Fuel Injector on Cylinder #5 101
Fuel Injector on Cylinder #6 103
Air Pressure Sensor on Intake Manifold 105
Air Pressure Sensor on Intake Manifold 107
Air Pressure Sensor on Intake Manifold 109
Air Pressure Sensor on Intake Manifold 111
Fuel Injector on Cylinder #1 113
Fuel Injector on Cylinder #1 115
Fuel Injector on Cylinder #2 117
Fuel Injector on Cylinder #2 119
Fuel Injector on Cylinder #3 121
Fuel Injector on Cylinder #3 123
Fuel Injector on Cylinder #4 125
Fuel Injector on Cylinder #4 127
Fuel Injector on Cylinder #5 129
Fuel Injector on Cylinder #5 131
Fuel Injector on Cylinder #6 133
Fuel Injector on Cylinder #6 135
Rotation Sensor (Crankshaft) 137
Rotation Sensor (Crankshaft) 139

Rotation Sensor (Camshaft) 141
Vehicle Speed Sensor.... 143
Vehicle Speed Sensor 145
Vehicle Speed Sensor 147
Vehicle Speed Sensor 149
Accelerator Pedal Sensor 151
Lubricating Oil Pressure Sensor 153
Lubricating Oil Pressure Sensor 155
Lubricating Oil Pressure Sensor 157
Lubricating Oil Pressure Sensor 159
Lubricating Oil Pressure Sensor 161
Battery Voltage 163
Battery Voltage 165
Battery Voltage 167
Battery Voltage 169
Brake Pedal Sensor 171
Recovery 173
Main Relay 175
Main Relay 177
Main Relay 179
Main Relay 181
Main Relay 183
Main Relay 185
Clutch Pedal Sensor 187
Rail Pressure Valve (CP 3.3) 189
Injectors Capacitor Bank 1 191
Injectors Capacitor Bank 1 193
Injectors Capacitor Bank 1 195
Injectors Capacitor Bank 1 197
Injectors Capacitor Bank 2 199
Injectors Capacitor Bank 2 201
Fuel Pressure Sensor (Rail) 203
Fuel Pressure Sensor (Rail) 205
Fuel Pressure Relief Valve (Rail) 207
Fuel Pressure Relief Valve (Rail) 209
Fuel Pressure Relief Valve (Rail) 211
Fuel Pressure Relief Valve (Rail) 213
Fuel Pressure Relief Valve (Rail) 215
Fuel Pressure Relief Valve (Rail) 217
Fuel Pressure Relief Valve (Rail) 219
Fuel Pressure Relief Valve (Rail) 221
Engine Coolant Level Sensor 225
Engine Coolant Level Sensor 227
Engine Coolant Level Sensor 229
Engine Coolant Level Sensor 231
Accelerator Pedal Sensor 233
Accelerator Pedal Sensor 235
Fuel Pressure Sensor (Rail) 237
Fuel Pressure Sensor (Rail) 239
Fuel Pressure Sensor (Rail) 241

Fuel Pressure Sensor (Rail) 243
Fuel Injector Cylinder #1 245
Fuel Injector Cylinder #2 247
Fuel Injector Cylinder #3 249
Fuel Injector Cylinder #4 251
Fuel Injector Cylinder #5 253
Fuel Injector Cylinder #6 255
Air Pressure Sensor on Intake Manifold 257
Air Pressure Sensor on Intake Manifold 259
Engine Cut-off Redundant Fault 261
Engine Cut-off Redundant Fault 263
Engine Cut-off Redundant Fault 265
Engine Cut-off Redundant Fault 267
Vehicle Speed Sensor 269
Accelerator Pedal Sensor 271
Oil Pressure Sensor 273
Oil Pressure Sensor 275
Engine Brake Solenoid 277
Engine Brake Solenoid 279
Engine Brake Solenoid 281
Processor Voltage Supply 283
Processor Voltage Supply 285
Processor Voltage Supply 287
Battery Voltage 289
Processor Voltage Supply 291
Memory Checksum Error 293
Memory Checksum Error 295
Memory Checksum Error 297
Memory Checksum Error 299
Warning Light 301
Warning Light 303
Warning Light 305
Warning Light 307
Warning Light 309
Warning Light 311
Main Relay 313
Main Relay 315
Water on Fuel Sensor 317
Water on Fuel Sensor 319

A

Accelerator Pedal Sensor *151*
Accelerator Pedal Sensor *233*
Accelerator Pedal Sensor *235*
Accelerator Pedal Sensor *271*
Accelerator Pedal Sensor *71*
Accelerator Pedal Sensor *73*
Accelerator Pedal Sensor *75*
Air Pressure Sensor on Intake Manifold *105*
Air Pressure Sensor on Intake Manifold *107*
Air Pressure Sensor on Intake Manifold *109*
Air Pressure Sensor on Intake Manifold *111*
Air Pressure Sensor on Intake Manifold *257*
Air Pressure Sensor on Intake Manifold *259*
Air Temperature Sensor on Intake Manifold *57*
Air Temperature Sensor on Intake Manifold *59*
Air Temperature Sensor on Intake Manifold *61*

B

Barometric Sensor *49*
Barometric Sensor *51*
Barometric Sensor *53*
Barometric Sensor *55*
Battery Voltage *163*
Battery Voltage *165*
Battery Voltage *167*
Battery Voltage *169*
Battery Voltage *289*
Brake Pedal Sensor *171*

C

Clutch Pedal Sensor *187*

E

Engine Brake Solenoid *277*
Engine Brake Solenoid *279*
Engine Brake Solenoid *281*
Engine Coolant Level Sensor *223*
Engine Coolant Level Sensor *225*
Engine Coolant Level Sensor *227*
Engine Coolant Level Sensor *229*
Engine Coolant Level Sensor *231*
Engine Coolant Temperature Sensor *63*
Engine Coolant Temperature Sensor *65*
Engine Coolant Temperature Sensor *67*
Engine Coolant Temperature Sensor *69*
Engine Cut-off Redundant Fault *261*
Engine Cut-off Redundant Fault *263*
Engine Cut-off Redundant Fault *265*
Engine Cut-off Redundant Fault *267*

F

Fuel Injector Cylinder #1 ..... *245*
Fuel Injector Cylinder #2 ..... *247*
Fuel Injector Cylinder #3 ..... *249*
Fuel Injector Cylinder #4 ..... *251*
Fuel Injector Cylinder #5 ..... *253*
Fuel Injector Cylinder #6 ..... *255*
Fuel Injector on Cylinder #1 ..... *113*

F *(continuação)*

Fuel Injector on Cylinder #1 ..... *115*
Fuel Injector on Cylinder #1 ..... *93*
Fuel Injector on Cylinder #2 ..... *117*
Fuel Injector on Cylinder #2 ..... *119*
Fuel Injector on Cylinder #2 ..... *95*
Fuel Injector on Cylinder #3 ..... *121*
Fuel Injector on Cylinder #3 ..... *123*
Fuel Injector on Cylinder #3 ..... *97*
Fuel Injector on Cylinder #4 ..... *125*
Fuel Injector on Cylinder #4 ..... *127*
Fuel Injector on Cylinder #4 ..... *99*
Fuel Injector on Cylinder #5 ..... *101*
Fuel Injector on Cylinder #5 ..... *129*
Fuel Injector on Cylinder #5 ..... *131*
Fuel Injector on Cylinder #6 ..... *103*
Fuel Injector on Cylinder #6 ..... *133*
Fuel Injector on Cylinder #6 ..... *135*
Fuel Pressure Relief Valve (Rail) *207*
Fuel Pressure Relief Valve (Rail) *209*
Fuel Pressure Relief Valve (Rail) *211*
Fuel Pressure Relief Valve (Rail) *213*
Fuel Pressure Relief Valve (Rail) *215*
Fuel Pressure Relief Valve (Rail) *217*
Fuel Pressure Relief Valve (Rail) *219*
Fuel Pressure Relief Valve (Rail) *221*
Fuel Pressure Sensor (Rail) *243*
Fuel Pressure Sensor (Rail) *203*
Fuel Pressure Sensor (Rail) *237*
Fuel Pressure Sensor (Rail) *239*

F *(continuação)*

Fuel Pressure Sensor (Rail) *43*
Fuel Pressure Sensor (Rail) *45*
Fuel Pressure Sensor (Rail) *47*
Fuel Pressure Sensor (Rail) *77*
Fuel Pressure Sensor (Rail) *79*
Fuel Pressure Sensor (Rail) *81*
Fuel Pressure Sensor (Rail) *83*
Fuel Pressure Sensor (Rail) *205*
Fuel Pressure Sensor (Rail) *241*

I

Injectors Capacitor Bank 1 ..... *191*
Injectors Capacitor Bank 1 ..... *193*
Injectors Capacitor Bank 1 ..... *195*
Injectors Capacitor Bank 2 ..... *197*
Injectors Capacitor Bank 2 ..... *199*
Injectors Capacitor Bank 2 ..... *201*

L

Lubricating Oil Pressure Sensor *153*
Lubricating Oil Pressure Sensor *155*
Lubricating Oil Pressure Sensor *157*
Lubricating Oil Pressure Sensor *159*
Lubricating Oil Pressure Sensor *161*
Lubricating Oil Temperature Sensor *85*
Lubricating Oil Temperature Sensor *87*
Lubricating Oil Temperature Sensor *89*
Lubricating Oil Temperature Sensor *91*

M

Main Relay *175*
Main Relay *179*
Main Relay *181*
Main Relay *183*
Main Relay *185*
Main Relay *177*
Main Relay *313*
Main Relay *315*
Memory Checksum Error *293*
Memory Checksum Error *295*
Memory Checksun Error *297*
Memory Checksum Error *299*

O

Oil Pressure Sensor *273*
Oil Pressure Sensor *275*

P

Processor Voltage Supply *283*
Processor Voltage Supply *285*
Processor Voltage Supply *287*
Processor Voltage Supply *291*

R

Rotation Sensor (Camshaft) *41*
Rotation Sensor (Crankshaft) *137*
Rotation Sensor (Crankshaft) *139*
Rotation Sensor (Camshaft) *141*
Recovery *173*
Rail Pressure Valve (CP 3.3) *189*

V

Vehicle Speed Sensor *143*
Vehicle Speed Sensor *145*
Vehicle Speed Sensor *147*
Vehicle Speed Sensor *149*
Vehicle Speed Sensor *269*

W

Warning Light *301*
Warning Light *303*
Warning Light *305*
Warning Light *307*
Warning Light *309*
Warning Light *311*
Water on Fuel Sensor *317*
Water on Fuel Sensor *319*

PCode MWM	PCode Bosch	Blinking	Description
P0087	P0233-08	32	Low pressure on fuel line
P0088	P0233-01	32	Fuel pressure signal exceeded maximum limit
P0094	P0233-10	32	Pressure leakage during idling
P0105	P0105-09	16	Atmospheric pressure above engine protection limit
P0106	P0105-04	16	Missing barometric sensor signal
P0107	P0105-02	16	Low voltage on barometric sensor
P0108	P0105-01	16	High voltage on barometric sensor
P0111	P0239-04	13	Missing intake air temperature sensor signal
P0112	P0239-02	13	Low voltage on intake air temperature sensor
P0113	P0239-01	13	High voltage on intake air temperature sensor
P0115	P0115-09	11	Engine coolant temperature exceeded engine protection limit
P0116	P0115-04	11	Missing engine coolant temperature sensor signal
P0117	P0155-02	11	Low voltage on engine coolant temperature sensor
P0118	P0115-01	11	High voltage on engine coolant temperature sensor
P0121	P0120-04	23	Missing signal from accelerator position sensor
P0122	P0120-02	23	Low voltage on accelerator position sensor
P0123	P0120-01	23	High voltage on accelerator position sensor
P0190	P0190-09	22	Fuel pressure above system maximum limit
P0191	P0190-04	22	Missing voltage signal from fuel pressure sensor
P0192	P0190-02	22	Low voltage on fuel pressure sensor
P0193	P0190-01	22	High voltage on fuel pressure sensor
P0196	P0195-09	17	Oil temperature above engine protection limit
P0197	P0195-02	17	Low voltage on oil temperature sensor
P0198	P0195-01	17	High voltage on oil temperature sensor
P0199	P0195-04	17	Missing signal from oil temperature sensor
P0201	P0201-04	58	Injector #1 disconnected
P0202	P0202-04	59	Injector #2 disconnected
P0203	P0203-04	61	Injector #3 disconnected
P0204	P0204-04	62	Injector #4 disconnected
P0205	P0205-04	63	Injector #5 disconnected
P0206	P0206-04	64	Injector #6 disconnected
P0235	P0235-09	14	Intake air pressure above maximum limit
P0236	P0235-04	14	Missing signal from intake air pressure sensor
P0237	P0235-02	14	Low voltage on intake air pressure sensor
P0238	P0235-01	14	High voltage on intake air pressure sensor

PCode MWM	PCode Bosch	Blinking	Description
P0261	P0201-02	58	Short circuit to ground on Injector #1
P0262	P0201-01	58	Short circuit to battery voltage on Injector #1
P0264	P0202-02	59	Short circuit to ground on Injector #2
P0265	P0202-01	59	Short circuit to battery voltage on Injector #2
P0267	P0203-02	61	Short circuit to ground on Injector #3
P0268	P0203-01	61	Short circuit to battery voltage on Injector #3
P0270	P0204-02	62	Short circuit to ground on Injector #4
P0271	P0204-01	62	Short circuit to battery voltage on Injector #4
P0273	P0205-02	63	Short circuit to ground on Injector #5
P0274	P0205-01	63	Short circuit to battery voltage on Injector #5
P0276	P0206-02	64	Short circuit to ground on Injector #6
P0277	P0206-01	64	Short circuit to battery voltage on Injector #6
P0335	P0219-08	38	Engine speed exceeded maximum limit (engine overspeed)
P0336	P0335-08	42	Missing signal from crankshaft rotation sensor
P0340	P0340-08	43	Missing signal from camshaft rotation sensor
P0500	P0500-09	25	Vehicle speed signal above maximum limit
P0501	P0500-04	25	Missing signal from vehicle speed sensor
P0502	P0500-02	25	Vehicle speed low signal
P0503	P0500-01	25	Vehicle speed high signal
P0510	P0120-08	23	Voltage on accelerator position sensor implausible with idle switch
P0520	P0520-09	18	Oil pressure above maximum engine protection limit
P0521	P0520-04	18	Missing signal from lubricating oil pressure sensor
P0522	P0520-02	18	Low voltage on lubricating oil pressure sensor
P0523	P0520-01	18	High voltage on lubricating oil pressure sensor
P0524	P0520-10	18	Oil pressure below engine protection minimum limit
P0560	P0560-10	21	Voltage supply below system minimum limit
P0561	P0560-09	21	Voltage supply above system maximum limit
P0562	P0560-02	21	Voltage supply low
P0563	P0560-01	21	Voltage supply high
P0571	P0571-08	28	No signal from brake pedal sensor
P0606	P0606-08	46	ECM program reset due adverse conditions
P0685	P1625-01	39	Failure on monitoring internal voltage supply
P0686	P1625-02	39	Failure on monitoring internal voltage supply
P0687	P1625-03	39	Failure on monitoring internal voltage supply
P0688	P1625-04	39	Failure on monitoring internal voltage supply

PCode MWM	PCode Bosch	Blinking	Description
P0689	P1625-05	39	Failure on monitoring internal voltage supply
P0690	P1625-06	39	Failure on monitoring internal voltage supply
P0704	P0704-04	27	No signal from clutch pedal sensor
P1002	P1690-04	83	Missing signal from high-pressure pump solenoid valve
P1003	P1606-04	49	Error on analog to digital signal conversion
P1004	P1606-02	49	Low voltage on internal capacitor Bank 1
P1005	P1606-01	49	High voltage on internal capacitor Bank 1
P1006	P1607-04	51	Error on analog to digital signal conversion
P1007	P1607-02	51	Low voltage on internal capacitor Bank 2
P1008	P1607-01	51	High voltage on internal capacitor Bank 2
P1087	P0233-03	32	Pressure leakage while turning off engine
P1088	P0233-09	32	Pressure leakage detected by implausible debt balance calculation
P1090	P0231-03	47	Pressure surge for opening of relief valve
P1091	P0231-02	47	Relief valve opening detected
P1092	P0231-04	47	Relief valve opening detected
P1093	P0231-10	47	Open relief valve
P1094	P0231-09	47	Relief valve closed after pressure surge
P1095	P0231-08	47	Relief valve opening detected
P1096	P0231-12	47	Relief valve opening detected
P1097	P0231-01	47	Fuel pressure on Rail above system maximum limit
P1115	P1612-10	91	Low level of engine coolant
P1116	P1612-04	91	Missing signal from engine coolant level sensor
P1117	P1612-03	91	Low voltage on engine coolant level sensor
P1118	P1612-12	91	High voltage on engine coolant level sensor
P1119	P1612-08	91	Signal from engine coolant level sensor implausible
P1122	P0120-02	23	Voltage supply low on accelerator position sensor
P1123	P0120-01	23	Voltage supply high on accelerator position sensor
P1190	P0233-12	32	Pressure on fuel line significantly higher than fuel pressure command
P1192	P0190-02	22	Voltage supply low on fuel pressure sensor
P1193	P0190-01	22	Voltage supply high on fuel pressure sensor
P1194	P0233-08	32	Pressure on fuel line significantly lower than fuel pressure command
P1201	P0201-08	58	Failure on monitoring signal from injector #1
P1202	P0202-08	59	Failure on monitoring signal from injector #2
P1203	P0203-08	61	Failure on monitoring signal from injector #3

PCode MWM	PCode Bosch	Blinking	Description
P1204	P0204-08	62	Failure on monitoring signal from injector #4
P1205	P0205-08	63	Failure on monitoring signal from injector #5
P1206	P0206-08	64	Failure on monitoring signal from injector #6
P1237	P0235-03	14	Voltage supply low on intake air pressure sensor
P1238	P0235-12	14	Voltage supply high on intake air pressure sensor
P1280	P1285-08	41	Test of internal clock implausible
P1281	P1285-04	41	Failure on engine turning off test
P1282	P1285-03	41	Monitoring signal of voltage supply below limit
P1283	P1285-12	41	Monitoring signal of voltage supply above limit
P1500	P0500-08	25	Vehicle speed signal is implausible
P1501	P0220-08	24	Implausibility between brake pedal and accelerator pedal switches
P1522	P0520-03	18	Voltage supply low on oil pressure sensor
P1523	P0520-12	18	Voltage supply high on lubricating oil pressure sensor
P1556	P1683-04	75	Engine brake solenoid disconnected
P1557	P1683-02	75	Short circuit to ground on engine brake solenoid
P1558	P1683-01	75	Short circuit to battery voltage on engine brake solenoid
P1561	P0561-08	48	Failure on monitoring module of internal clock
P1562	P0561-03	48	Internal voltage supply low
P1563	P0561-12	48	Internal voltage supply high
P1564	P0560-04	21	Error on analog to digital signal conversion
P1565	P0561-04	48	Failure on monitoring module of internal clock
P1604	P1604-08	45	Memory block checksum error
P1605	P1605-08	93	Memory writing checksum error
P1614	P1614-08	94	Data saving execution error
P1615	P1615-08	95	Memory block mapping error
P1640	P0650-04	71	Emergency stop light disconnected
P1641	P0650-02	71	Short circuit to ground on emergency stop light
P1642	P0650-01	71	Short circuit to battery voltage on emergency stop light
P1650	P1674-04	69	Warning light disconnected
P1651	P1674-02	69	Short circuit to ground on warning light
P1652	P1674-01	69	Short circuit to battery voltage on warning light
P1691	P1625-01	39	Failure on monitoring internal voltage supply
P1692	P1625-08	39	Failure on monitoring voltage supply of main relay
P2265	P1613-04	92	Missing signal from water on fuel sensor
P2269	P1613-09	92	Presence of water on fuel

Cause
Divergent signals on phase sensor and rotation sensor

Details

Synchronicity of different signals was detected between phase sensor (camshaft) and rotation sensor (crankshaft). This code may have been generated by actual engine running conditions (pulse wheel / sensors position).

Before starting the test, be sure the sensor is correctly fixed and free of contamination. Clean it as necessary.

Strategy

Yellow light turns ON	Above 3200 rpm; In case of lacking signal from just one sensor; Lack of fuel
Red light blinks	In case of lacking signal from both sensors Engine turns off

ECM uses this signal to calculate:

- Engine speed;
- Position of piston in the cylinder;
- Calculation of start of injection angle;
- Camshaft / crankshaft signals timing.

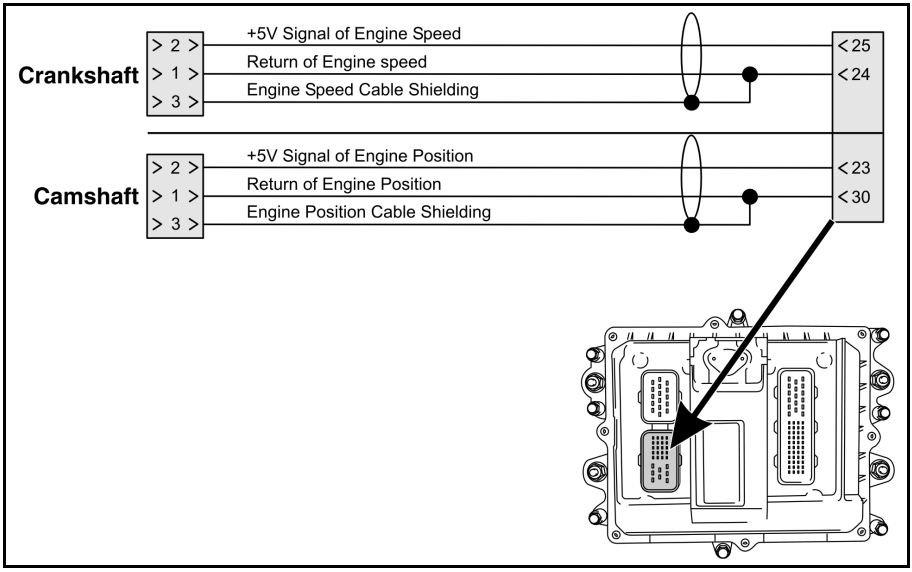

Troubleshooting Routine

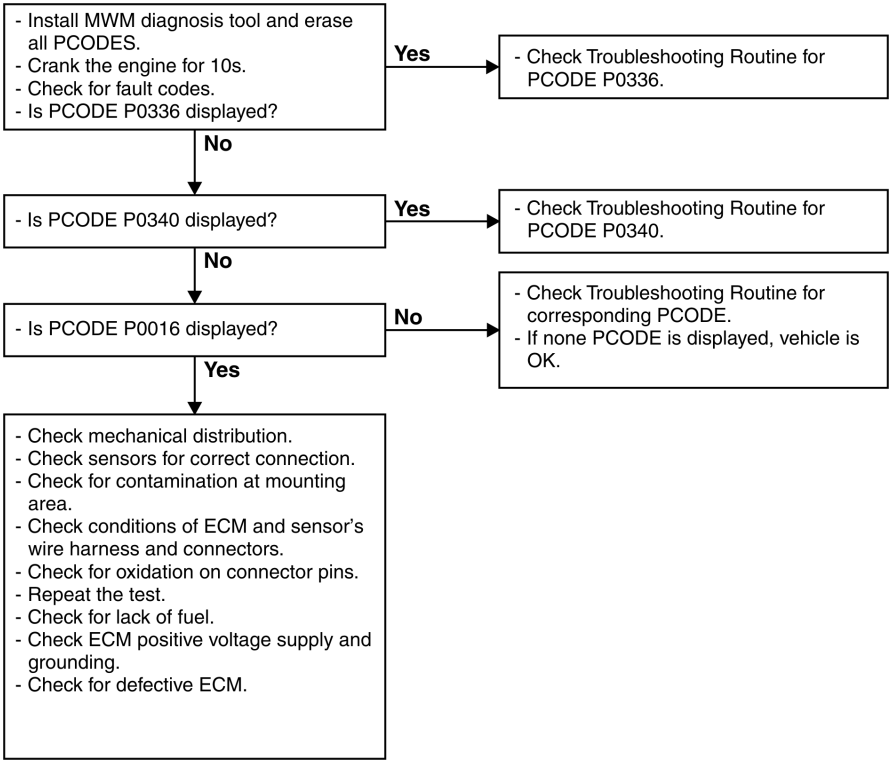

Cause
Low fuel pressure on fuel line (Low Pressure)

Details

A fuel pressure low signal was detected on fuel line that is incompatible with the signals from other sensors. There is possibly a biased of sensor's resistance or a short circuit on wire harness. Inspect connector pins on engine and ECM wire harness. Check connector pins for short circuit to ground or between each other (pins 12, 20 and 27).
Check for voltage supply (4.75 ~ 5.25 V) on pins 12 - 20 and 20 - 27.
As this is one of the sensors built-in at Rail, erase all active fault codes and proceed according to troubleshooting routine.

Strategy

Sensor is defective or pressure value exceeds 1485 bar.	
Red light turns ON	Engine power is reduced below 80%.
Fuel pump return will open	Rail pressure will be reduced to 80 bar.
ECM uses this signal to calculate fuel injection volume and as a safety element for the system.	

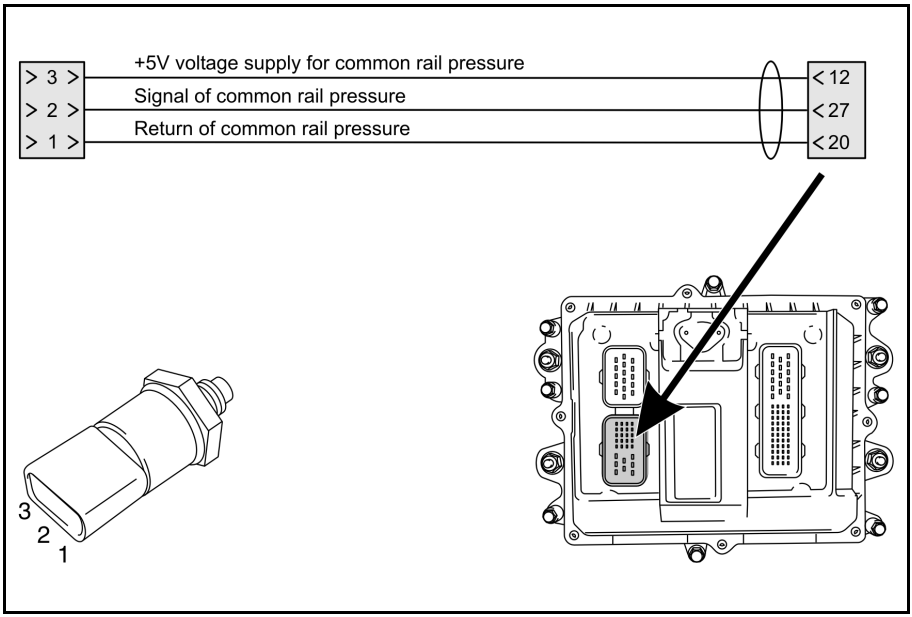

Troubleshooting Routine

- Disconnect rail pressure sensor connector and install a voltmeter between connector pins 1 and 3.
- Turn ignition switch on and check the voltage.
- Is value equal to 5V?

No →

- Is measured value more than 5V?

Yes →

Check for:
- Incorrect voltage supply on system.
- Defective ECM.

No →

- Check for continuity between sensor connector pin 3 and ECM connector pin 2.12.
- Check for continuity between sensor connector pins 1 and ECM connector pin 2.20.
- Check for improper connection or oxidation on sensor and ECM connectors.
- Repeat the tests.

Yes ↓

- Reconnect sensor connector.
- Apply a voltmeter between pins 1 and 2 on rear side of sensor connector.
- Turn ignition on without cranking the engine.
- Is measured value around 0.5V?

No →

- Disconnect the connector and check for continuity between connector pin 2 and ECM pin 2.27.
- Check for improper connection or oxidation on sensor and ECM connectors.
- If voltage is 0V, check for short circuit on sensor and ECM connector, wire harness or Rail pressure sensor.
- Repair as necessary.
- Repeat the tests.

Yes ↓

- Crank the engine for 5s, at least.
- Is measured value above 1V?

No →

- Check for lack of fuel at common rail.
- If there is pressurized fuel at rail (check fuel flow at rail return line), replace the pressure sensor.
- Repeat the tests.

Yes ↓

- Check voltage on pressure sensor according to engine rotation:
- Idling - 1.3 ~ 1.5 V;
- 1500 RPM - 1.4 ~ 1.6 V;
- 2000 RPM - 2.0 ~ 2.2 V;
- 2500 RPM - 2.3 ~ 2.5 V.

- Are measured values OK?

No →

- If engine is not running, check for mechanical problems or follow the Troubleshooting Routines corresponding to found PCODES.
- Check for lack of fuel, air intake leakage, possible system leakages, defective CP3 and safety valve on rail.
- Check fuel lines and filters for blockage.
- Check rail pressure sensor function and replace it, if necessary.
- Repeat the tests.

Yes ↓

- Rail pressure sensor OK.
- Repeat the test.
- If none PCODE is on memory, vehicle is OK.

Cause
Fuel pressure signal exceeded maximum limit (High Pressure)

Details

The signal from Rail pressure sensor is above maximum limit programmed for this application. Engine actual running conditions, reading error from sensor or a defective wire harness may have generated this code. As this is one of the sensors built-in at Rail, erase all active fault codes and proceed according to troubleshooting routine.

Strategy

Sensor is defective or pressure value exceeds 1485 bar.	
Red light turns ON	Engine power is reduced below 80%
Fuel pump return will open	Rail pressure will be reduced to 80 bar.
ECM uses this signal to calculate fuel injection volume and as a safety element for the system.	

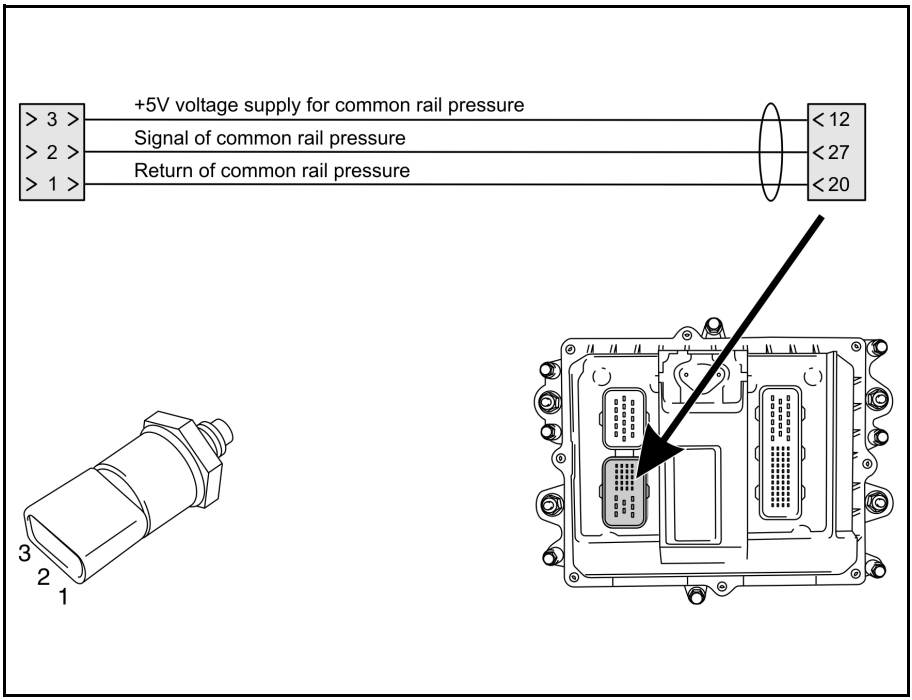

Troubleshooting Routine

Disconnect the sensor and check its resistance according to the table below:

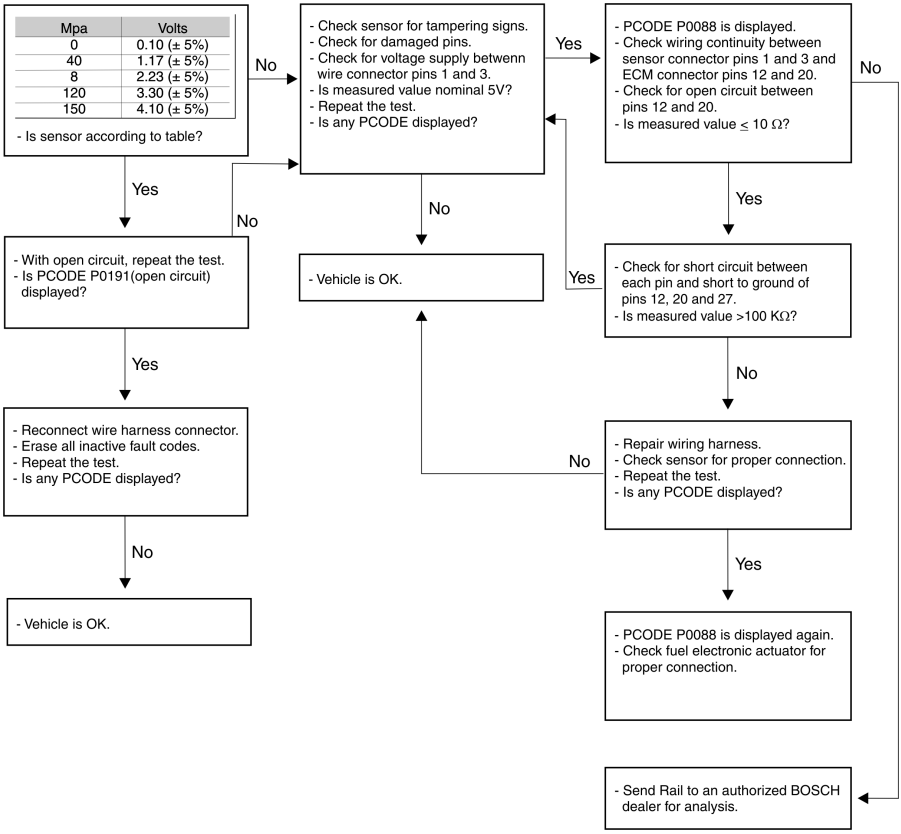

Cause
Pressure leakage while engine is idling (Low Idle).

Details

A pressure leakage on fuel line was detected while engine was running idle.
While engine is idling, it was detected a necessity of increasing the flow rate to stabilize Rail pressure; this increase amount is not within the map stored on ECM memory. Inspect fuel system high-pressure circuit and check for possible external leakage. Check for damage signs on safety valve or any clogging on fuel filter.

Strategy

Sensor is defective or pressure value exceeds 1485 bar.	
Red light turns ON	Engine power is reduced below 80%
Fuel pump return will open	Rail pressure will be reduced to 80 bar.
ECM uses this signal to calculate fuel injection volume and as a safety element for the system.	

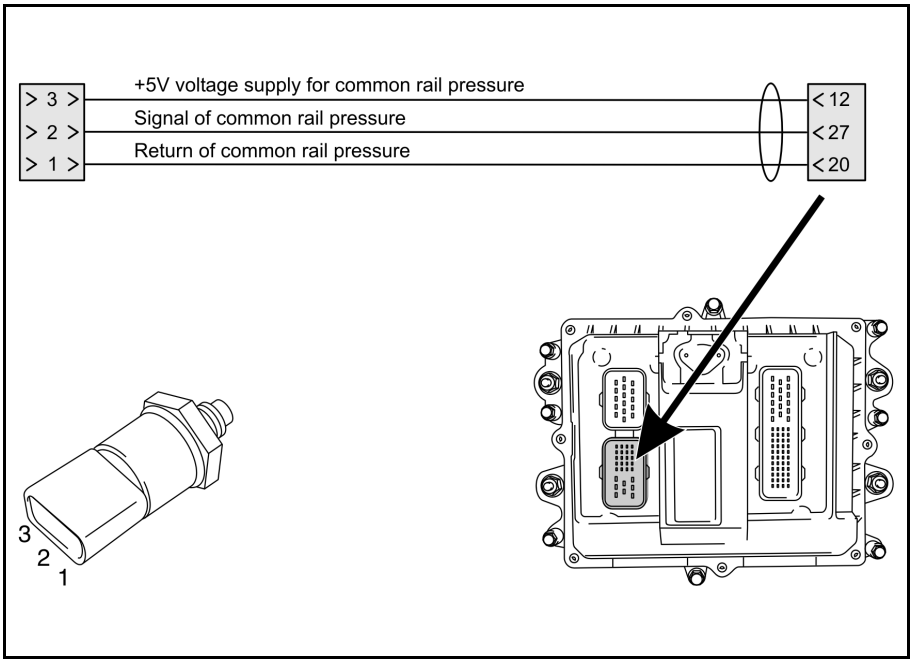

Troubleshooting Routine

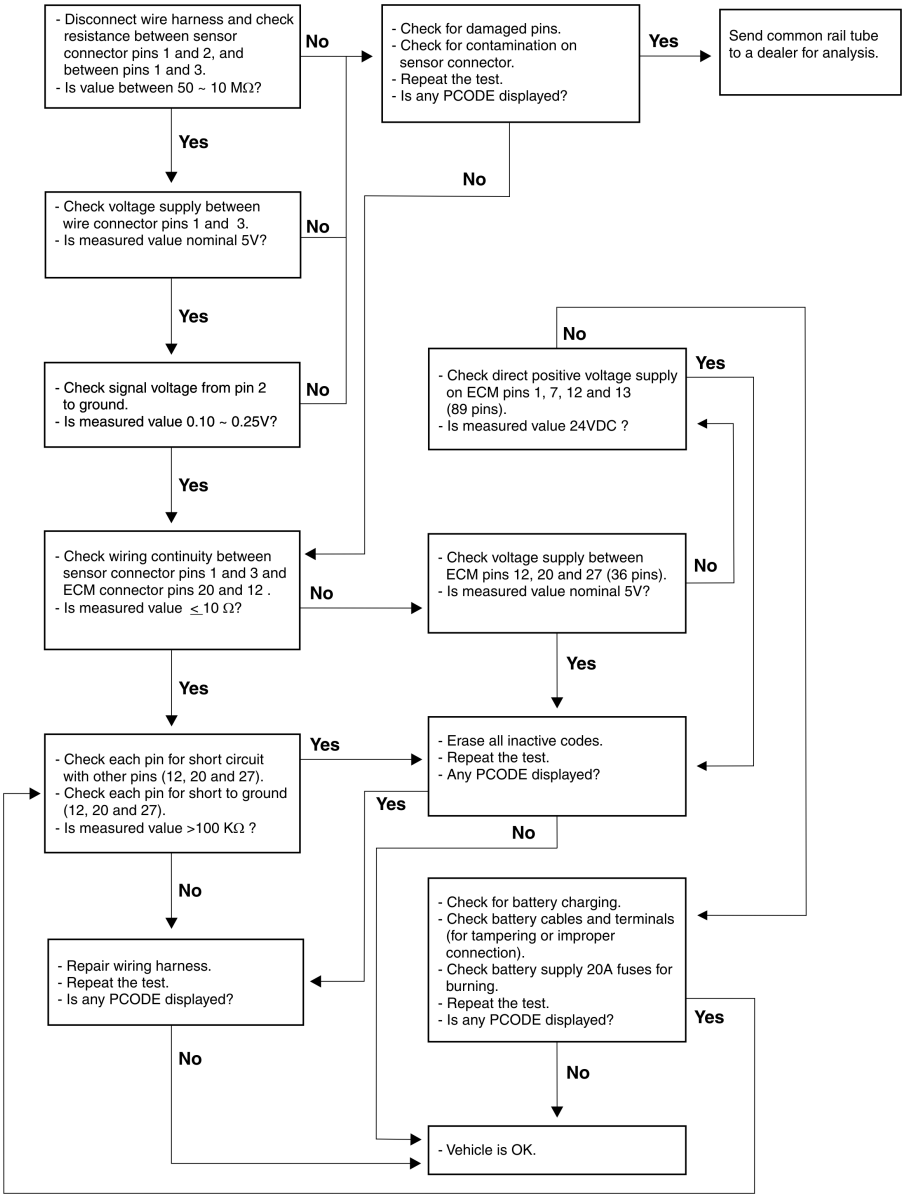

Cause
Atmospheric pressure is above engine protection limit.

Details

A value of atmospheric pressure above the value programmed on ECM for this application was detected. Compare the programmed value with the actual altitude of vehicle.
If the value is within the programmed range, be sure there is no water or other substance that could impair the sensor's reading. Clean it as necessary.
As this is an internal sensor, inspect the ECM and wire harness connector pins for corrosion, damaged pins or moisture, using the proper probes for testing and measuring.

Strategy

Below 1000 rpm	Engine speed will be sustained and it will fixed an injection value of 12 mg / Injection / Yellow light turns ON.
ECM uses this signal to select injection maps according to altitude aiming to protect the turbocharger / engine.	

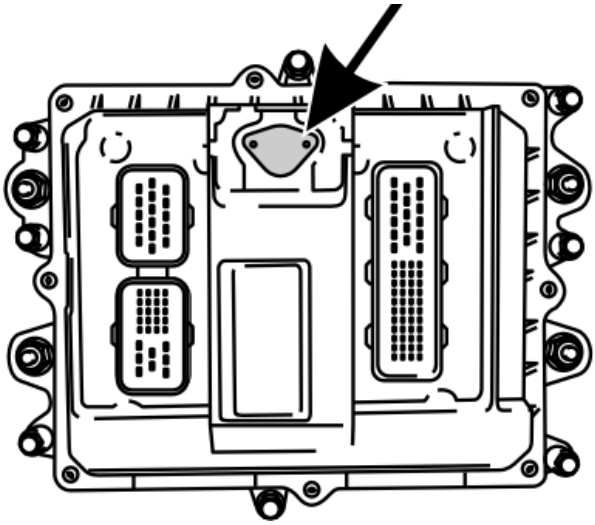

Troubleshooting Routine

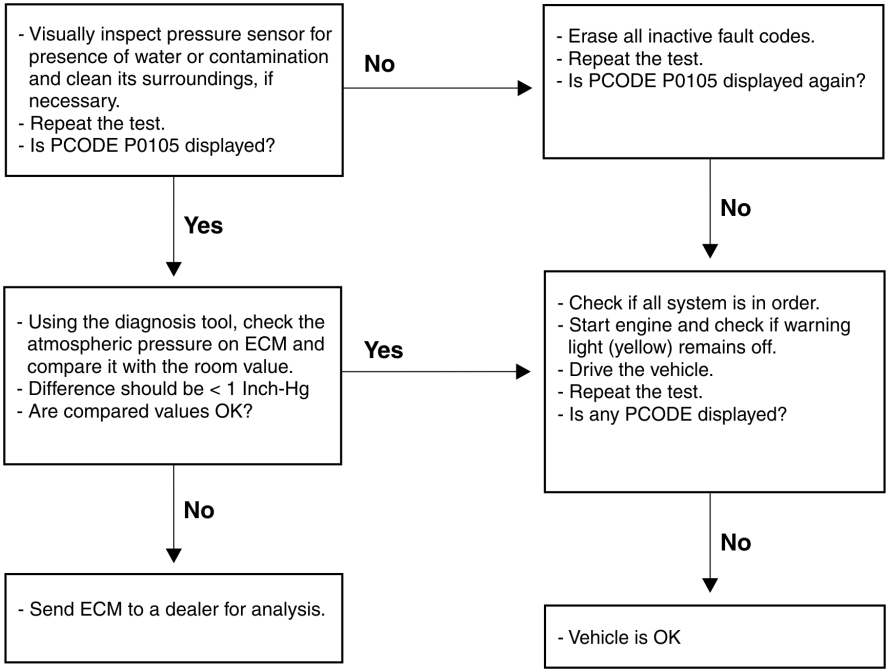

Cause
Missing barometric sensor signal.

Details

The barometric sensor or its circuit is possibly in a condition of open circuit, with no connection to ECM. Check for presence of water or other substance around the sensor that could cause an internal short circuit to the component. Clean it as necessary.
Using the Diagnosis Tool, check for active fault codes. Erase all Pcodes and check that room air pressure monitored by ECM is in accordance with actual pressure (< 1 inch-Hg).
As this is an internal sensor, inspect the ECM and wire harness connector pins for corrosion, damaged pins or moisture, using the proper probes for testing and measuring.

Strategy

It is adopted a fixed value of 600 hpa	Yellow light turns ON.
ECM uses this signal to select injection maps according to altitude aiming to protect the turbocharger / engine.	

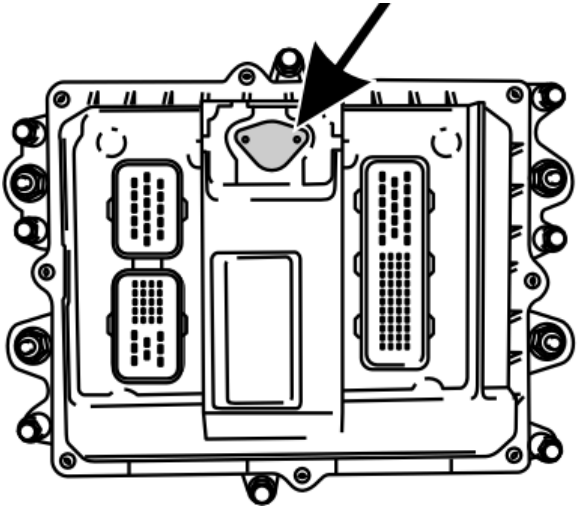

Troubleshooting Routine

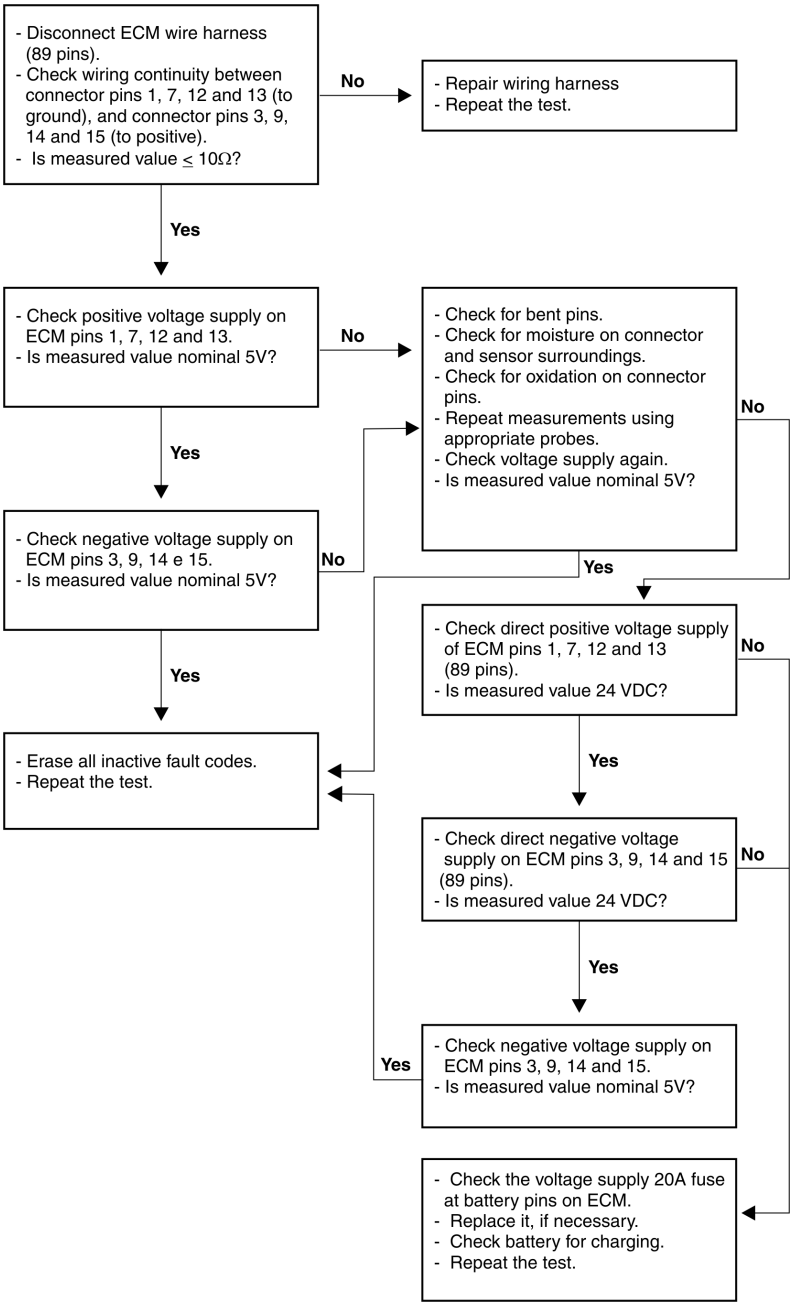

Cause
Low voltage on barometric sensor.

Details

A voltage supply low value was detected on barometric sensor, possibly due a short circuit to ground. There is also a chance that this voltage is being caused by a voltage supply to ECM inferior to 8 volts. Check for other active fault codes and correct them. As this is an internal sensor, inspect the ECM and wire harness connector pins for corrosion, damaged pins or moisture, using the proper probes for testing and measuring.

Strategy

Above 3000 hpa	Engine power is reduced by 50% / Yellow light turns ON.
ECM uses this signal to select injection maps according to altitude aiming to protect the turbocharger / engine.	

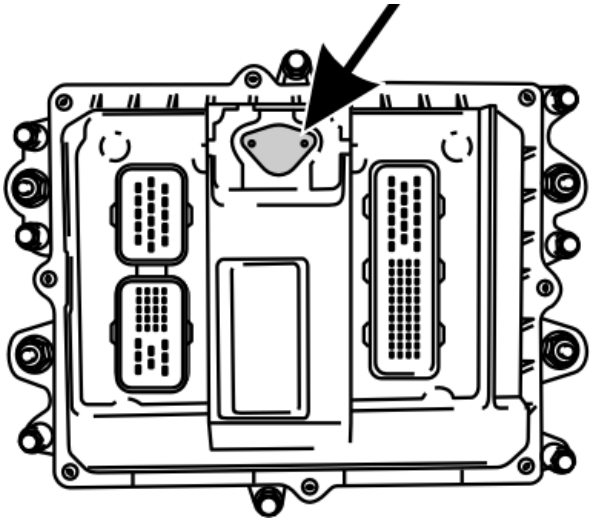

Troubleshooting Routine

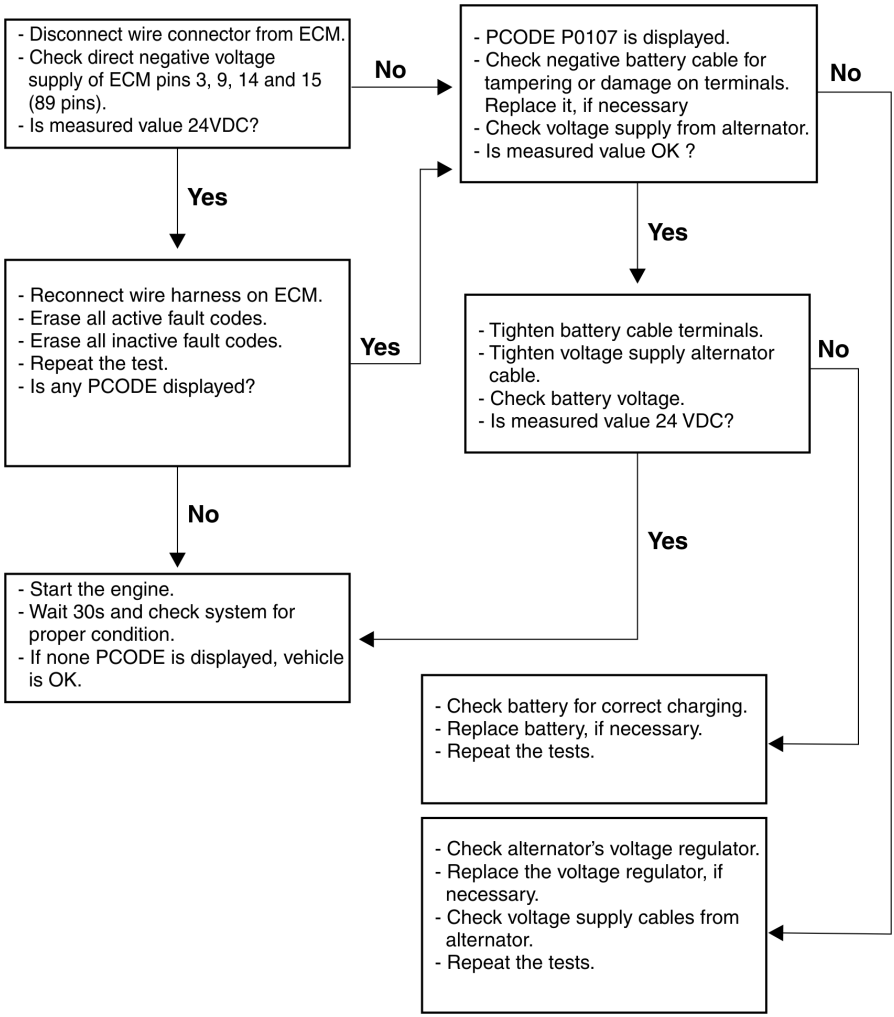

Cause
High voltage on barometric sensor.

Details

A voltage supply high value was detected on barometric sensor, possibly caused by a short circuit to positive battery voltage. There is also a chance that this voltage is being caused by voltage supply from alternator with a value above the tolerated by ECM. Check for other active fault codes and correct them. As this is an internal sensor, inspect the ECM and wire harness connector pins for corrosion, damaged pins or moisture, using the proper probes for testing and measuring.

Strategy

Engine speed will be sustained below 1000 rpm	Yellow light turns ON.
ECM uses this signal to select injection maps according to altitude aiming to protect the turbocharger / engine.	

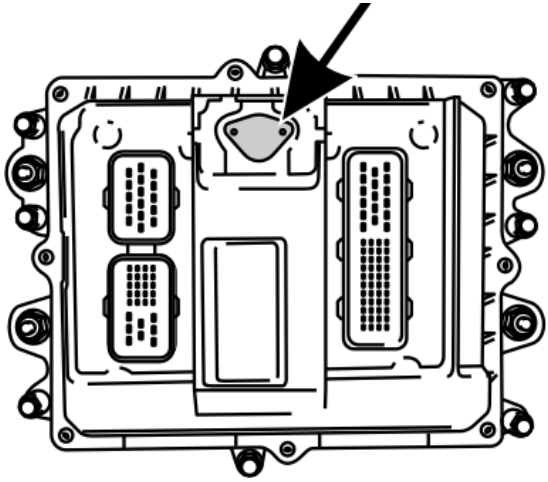

Troubleshooting Routine

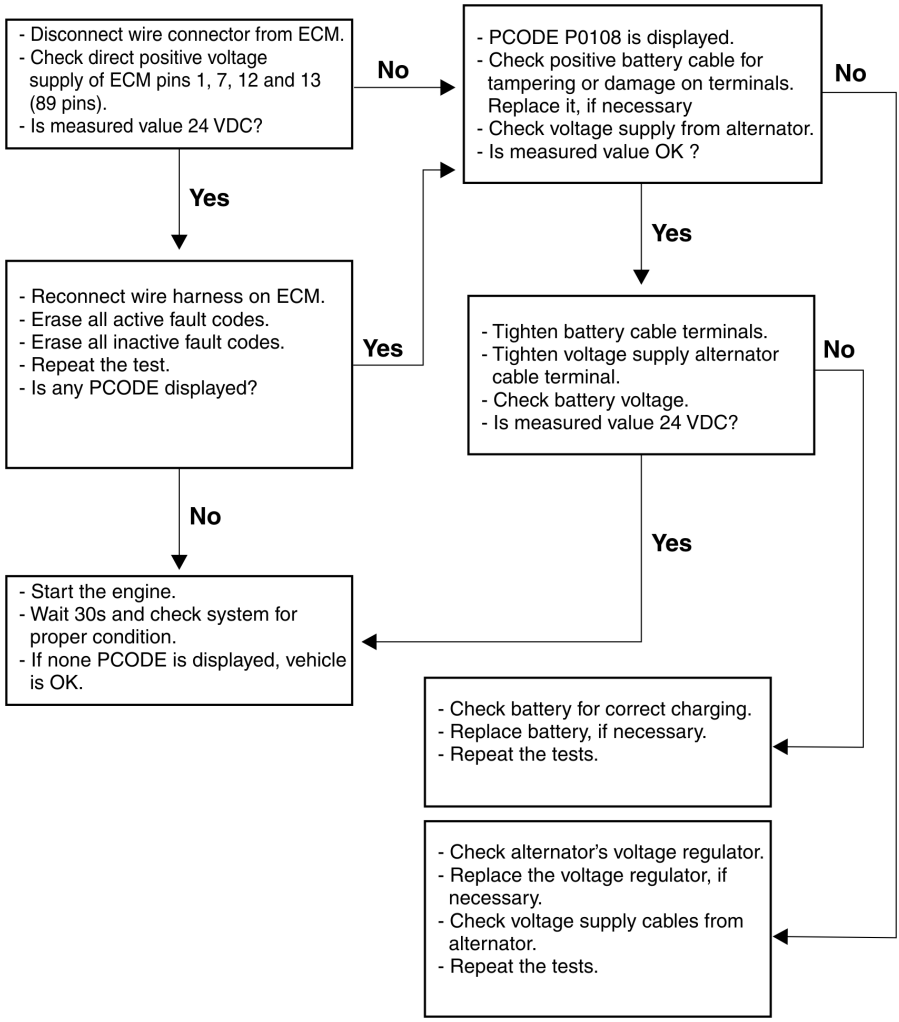

Cause
Missing signal from intake air temperature sensor

Details

Possibly the air temperature sensor on intake manifold or its circuit is in an open circuit condition, with no connection to ECM.
Create an inverse defect according to Troubleshooting Routine in order to locate the failure.

Strategy

Detection of defective sensor	Yellow light turns ON.
	Engine power is reduced by 50%.

ECM uses this signal to calculate the intake air mass and to define:

- Injection timing;
- Start of injection angle;
- As protection on emissions map.

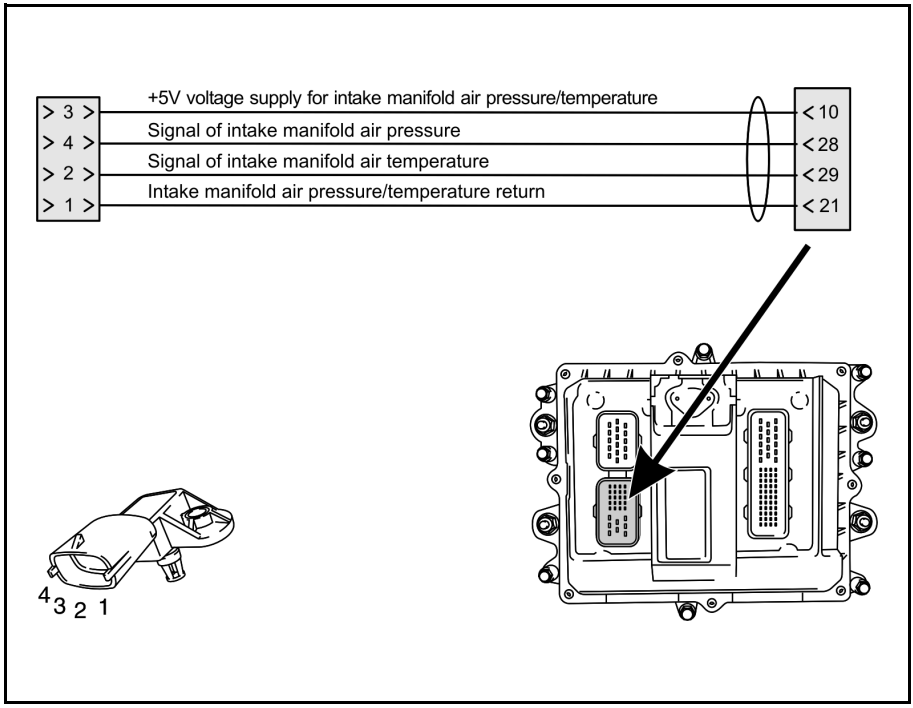

Troubleshooting Routine

- Disconnect sensor connector.
- Check voltage between wire connector pins 1 and 2.
- Is value equal to 5V?

No → Check for:
- Continuity between sensor connector pin 1 and ECM connector pin 2.21.
- Continuity between sensor connector pin 2 and ECM connector pin 2.29.
- Is measured value equal or less than 1Ω ?

No → Check for:
- Improper connection or wire harness breakage on sensor and ECM connectors.
- Repeat the test.

Yes → Check for:
- ECM voltage supply (see page 4).
- ECM grounding.
- Defective ECM.

Yes ↓

- Disconnect sensor wire connector.
- Short connect pins 1 and 2 on wire connector using a jumper.
- Repeat the test.
- Is PCODE P0112 displayed?

No → (back to Check for)

Yes ↓

- Check resistance between sensor pins 1 and 2.
- Is value according sensor's resistance table?

No → Replace the temperature sensor.
- Repeat the test.

Yes ↓

- Heat the sensor and check its resistance.
- Do resistance between pins 1 and 2 decreases as the temperature increases?

No → (back to Check for)

Yes ↓

- Sensor OK.
- Check for contamination on connector.
- Repeat the test.
- If Yesne PCODE is displayed, vehicle is OK.

TEMPERATURE (°C)	RESISTANCE (Ω)	VOLTAGE (V)
-20	14785 ~ 16443	4.17 ~ 4.71
-10	8951 ~ 9901	4.00 ~ 4.52
0	5605 ~ 6168	3.77 ~ 4.25
10	3618 ~ 3963	3.48 ~ 3.92
20	2402 ~ 2619	3.12 ~ 3.52
30	1645 ~ 1786	2.77 ~ 3.07
40	1152 ~ 1246	2.35 ~ 2.65
50	819 ~ 883	1.97 ~ 2.23
60	590 ~ 634	1.62 ~ 1.82
70	431 ~ 462	1.31 ~ 1.47
80	319 ~ 340	1.04 ~ 1.17
90	238 ~ 254	0.82 ~ 0.93
100	180 ~ 192	0.69 ~ 0.71
110	134 ~ 150	0.54 ~ 0.57
120	103 ~ 116	0.44 ~ 0.46
130	80 ~ 90	0.35 ~ 0.37

Cause
Low voltage on intake air temperature sensor.

Details

A voltage low signal was detected (incompatible with signals from other sensors) coming from air temperature sensor on intake manifold. There is possibly a biased of sensor's resistance or a short circuit on wire harness.

Strategy

Detection of defective sensor	Yellow light turns ON
	Engine power is reduced by 50%.

ECM uses this signal to calculate the intake air mass and to define:

- Injection timing;
- Start of injection angle;
- As protection on emissions map.

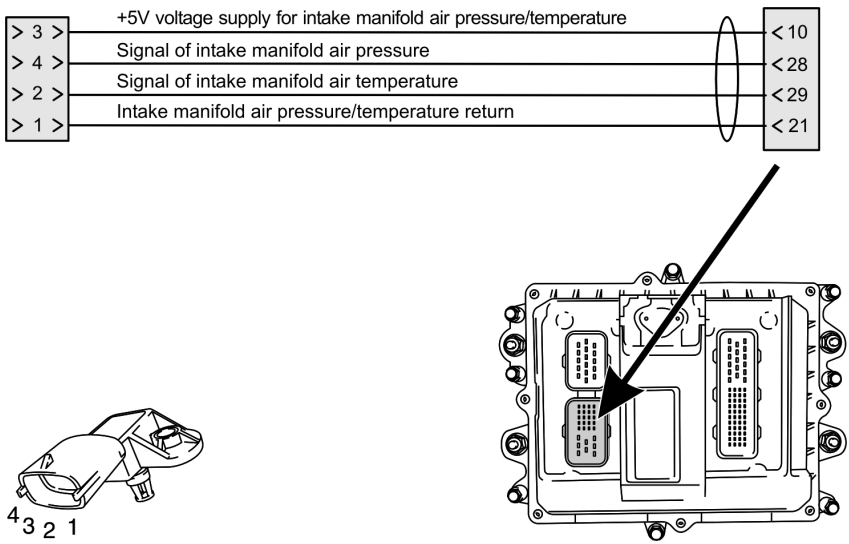

Troubleshooting Routine

- Disconnect sensor connector.
- Check voltage between wire connector pins 1 and 2.
- Is value equal to 5V?

No →

Check for:
- Continuity between sensor connector pin 1 and ECM connector pin 2.21.
- Continuity between sensor connector pin 2 and ECM connector pin 2.29.
- Are measured values equal or less than 1Ω?

No →

Check for:
- Improper connection or wire harness breakage on sensor and ECM connectors.
- Repeat the test.

Yes ↑

Check for:
- ECM voltage supply (see page 4).
- ECM grounding.
- Defective ECM.

Yes ↓

- Disconnect sensor wire connector.
- Check for fault codes.
- Repeat the test.
- Is PCODE P0112 displayed?

Yes →

Check for:
- Short circuit on sensor connector, ECM connector and wire harness.
- Wire harness insulation.
- Correct problem and repeat the test.

No ↓

- Check resistance between sensor pins 1 and 2.
- Is measured value according to sensor's resistance table?

No →

- Replace intake air temperature sensor.
- Repeat the test.

Yes ↓

- Heat the sensor and check its resistance.
- Do resistance between pins 1 and 2 decrease as the temperature increases?

No ↑

Yes ↓

- Sensor OK.
- Check connector for contamination.
- Repeat the test.
- If none PCODE is displayed, vehicle is OK.

TEMPERATURE (°C)	RESISTANCE (Ω)	VOLTAGE (V)
-20	14785 ~ 16443	4.17 ~ 4.71
-10	8951 ~ 9901	4.00 ~ 4.52
0	5605 ~ 6168	3.77 ~ 4.25
10	3618 ~ 3963	3.48 ~ 3.92
20	2402 ~ 2619	3.12 ~ 3.52
30	1645 ~ 1786	2.77 ~ 3.07
40	1152 ~ 1246	2.35 ~ 2.65
50	819 ~ 883	1.97 ~ 2.23
60	590 ~ 634	1.62 ~ 1.82
70	431 ~ 462	1.31 ~ 1.47
80	319 ~ 340	1.04 ~ 1.17
90	238 ~ 254	0.82 ~ 0.93
100	180 ~ 192	0.69 ~ 0.71
110	134 ~ 150	0.54 ~ 0.57
120	103 ~ 116	0.44 ~ 0.46
130	80 ~ 90	0.35 ~ 0.37

Cause
High voltage on intake air temperature sensor.

Details

A voltage high signal was detected (incompatible with signals from other sensors) coming from air temperature sensor on intake manifold. There is possibly a biased of sensor's resistance or a short circuit on wire harness.

Strategy

Detection of defective sensor	Yellow light turns ON.
	Engine power is reduced by 50%.

ECM uses this signal to calculate the intake air mass and to define:

- Injection timing;
- Start of injection angle;
- As protection on emissions map.

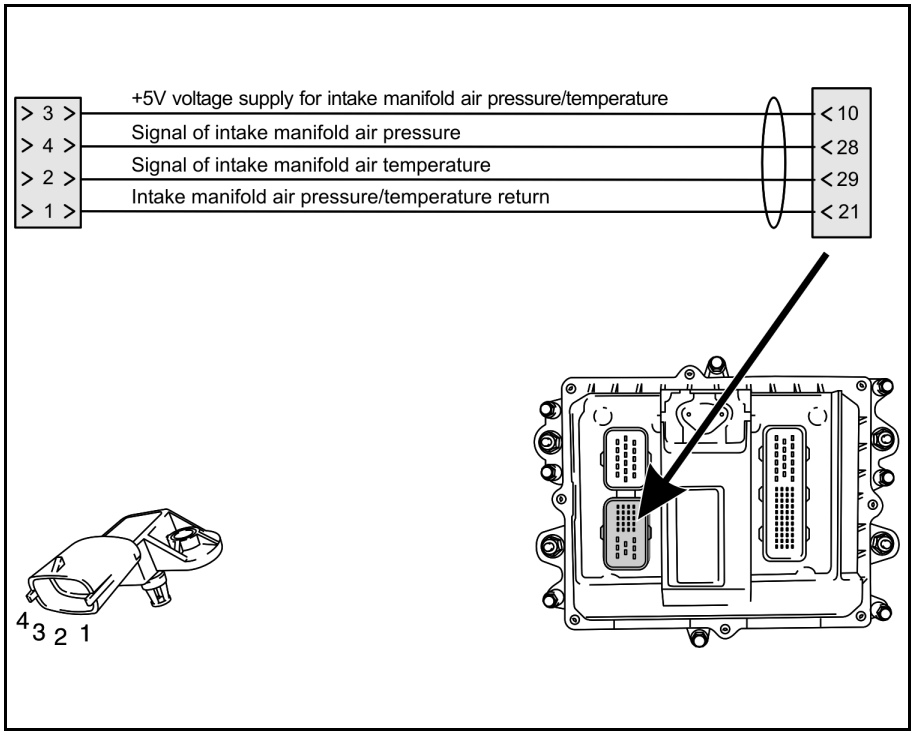

Troubleshooting Routine

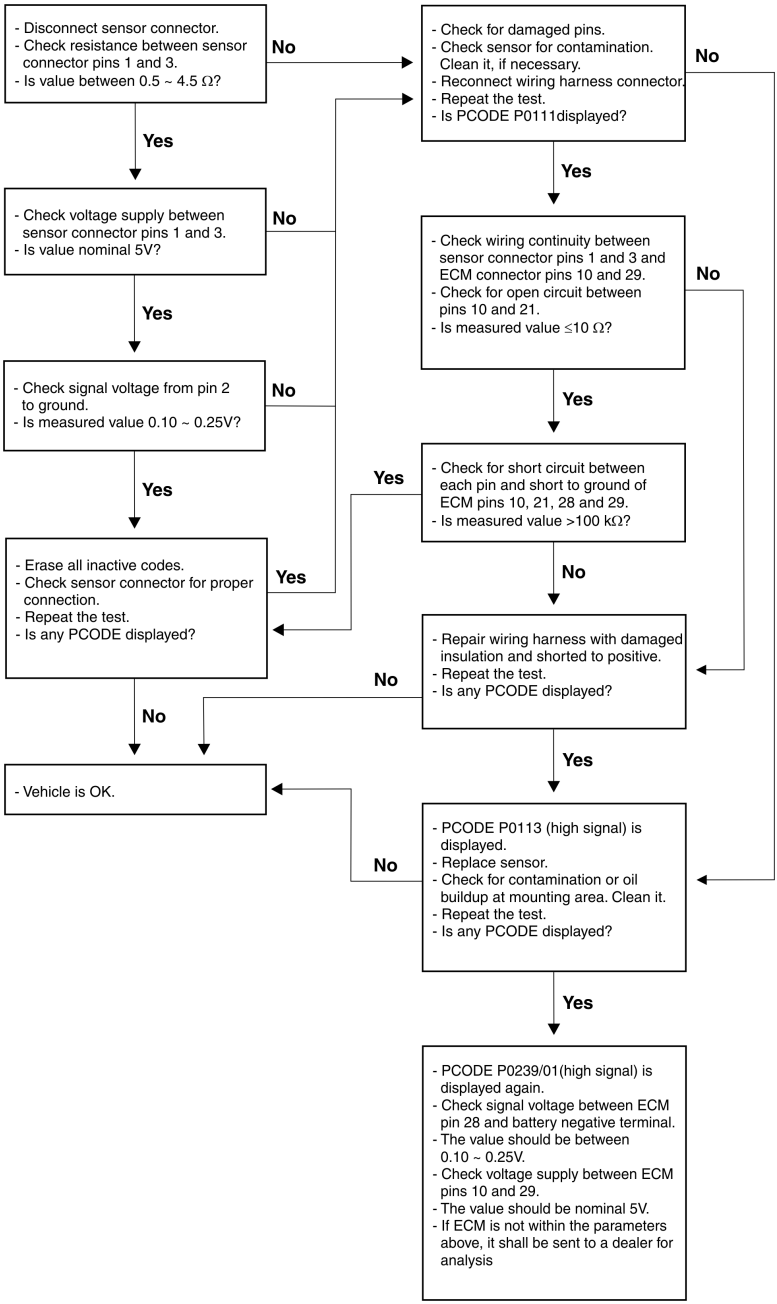

Cause
Engine coolant temperature exceeded engine protection limit.

Details

The engine coolant temperature is above the value programmed for engine protection (105°C). Engine actual running conditions, reading error from sensor or a defective wire harness may have generated this code. Before starting the tests, check for signs of contamination on sensor that could generate reading errors. Check the air flow passing through radiator and eliminate obstructions on its fins. Check thermostatic set for proper function.

Strategy

Above 100 °C	Yellow light turns ON.
Above 105 °C	Engine power is reduced by 50%.
Above 115 °C	Engine power is reduced by 100%.

ECM uses this signal for selection of:
- Strategies for cold start and hot start;
- Correct injection timing;
- Correct start of injection angle.

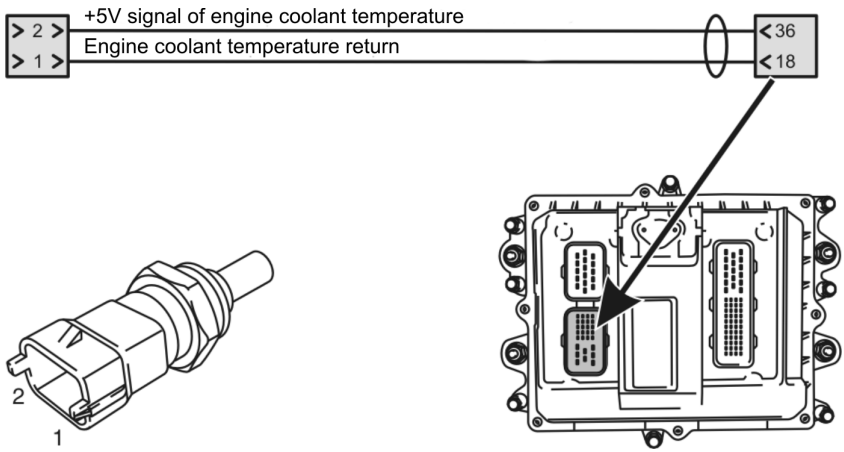

Troubleshooting Routine

°C	kΩ
-20	15.462 (± 6%)
-10	9.397 (± 6%)
0	5.896 (± 6%)
10	3.792 (± 6%)
20	2.500 (± 6%)
25	2.057 (± 5%)
30	1.707 (± 5%)
40	1.175 (± 5%)
50	0.834 (± 4%)
60	0.596 (± 4%)
70	0.435 (± 4%)
80	0.323 (± 2%)
90	0.243 (± 2%)
100	0.186 (± 2%)
110	0.144 (± 2%)
120	0.113 (± 2%)
130	0,089 (± 2%)

- Is sensor according to table?

Yes

- Remove the sensor and check for contamination. Clean it.
- Check engine coolant condition. Replace it, if necessary.
- Check cooling system for cleaness.
- Erase all inactive fault codes.
- Repeat the test with open circuit.
- Is PCODE P0116 displayed?

No

- PCODE P0115 is displayed.
- Replace the sensor.
- Check for contamination signs or dirty buildup at sensor`s mounting area. Clean it.
- Erase all inactive fault codes.
- Repeat the test.
- Is any PCODE displayed?

No

Yes

Yes

- Check for continuity between pins 18 (to positive) and 36 (to ground) on engine wire harness.
- Is measured value ≤10 Ω?

No

- Repair wiring harness.
- Make all continuity checkings.
- Repeat the test.
- Is any PCODE displayed?

No

Yes

Yes

- Check direct positive voltage supply of ECM pins 18 and 36.
- Is measured value nominal 5V ?

No

Yes

- Check direct positive voltage supply of ECM pins 1, 7, 12 and 13 (89 pins).
- Check direct negative voltage supply of ECM pins 3, 9, 14 and 15 (89 pins).
- Is measured value 24VDC ?

No

Yes

- Check for battery charging.
- Check battery cables and terminals condition (for tampering or improper connection).
- Check alternator is voltage regulator. Replace it, if necessary.
- Check battery voltage supply 20A fuse for burning.
- Repeat the test.
- Is any PCODE displayed?

No

Yes

- Replace battery.
- Repeat the test.
- Is any PCODE displayed?

- Erase all inactive codes.
- Check that system is in order.
- Repeat the test.
- Is any PCODE displayed?

No

- Vehicle is OK.

Cause
Missing signal from engine coolant temperature sensor

Details

The engine coolant temperature sensor or its circuit possibly is in an open circuit condition, with no connection to ECM.
Create an inverse defect according to Troubleshooting Routine in order to locate the failure.

Strategy

Above 100 °C	Yellow light turns ON
Above 105 °C	Engine power is reduced by 50%
Above 115 °C	Engine power is reduced by 100%

ECM uses this signal for selection of:
- Strategies for cold start and hot start;
- Correct injection timing;
- Correct start of injection angle.

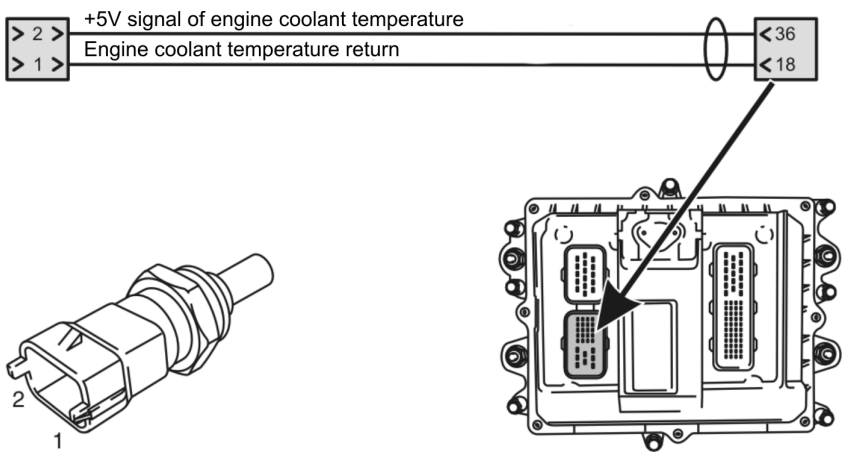

Troubleshooting Routine

- Disconnect sensor connector.
- Check voltage between wire connector pins 1 and 2.
- Is value equal to 5V?

No → Check for:
- Continuity between sensor pin 1 and ECM pin 2.18.
- Continuity between sensor pin 2 and ECM pin 2.36.
- Is value equal or less than 1 ?

No → Check for:
- Improper connection or wire harness breakage on sensor and ECM connectors.
- Repeat the test.

Yes → Check for:
- ECM voltage supply (see page 4).
- ECM grounding.
- Defective ECM.

Yes ↓

- Disconnect sensor wire connector.
- Short connect wire connector pins 1 and 2.
- Check for fault codes.
- Is PCODE P0117 displayed?

No → (back to "Is value equal to 5V?")

Yes ↓

- Check resistance between temperature sensor pins 1 and 2.
- Is measured value according to sensor's resistance table?

No → Replace engine coolant temperature sensor.
- Replace engine coolant temperature sensor.
- Repeat the test.

Yes ↓

- Heat the sensor and check its resistance.
- The resistance between pins 1 and 2 decreases as the temperature increases?

No → (back to "Is measured value according to sensor's resistance table?")

Yes ↓

- Sensor OK.
- Check connector for contamination.
- Repeat the test.
- If none PCODE is displayed. vehicle is OK.

TEMPERATURE (C)	RESISTANCE (Ω)	VOLTAGE (V)
-20	14096 ~ 16827	4.17 ~ 4.71
-10	8642 ~ 10152	4.00 ~ 4.52
0	5466 ~ 6326	3.77 ~ 4.25
20	2351 ~ 2649	3.12 ~ 3.52
25	1941 ~ 2173	2.77 ~ 3.07
40	1118 ~ 1231	2.35 ~ 2.65
60	573 ~ 618	1.62 ~ 1.82
80	313 ~ 332	1.04 ~ 1.17
100	182 ~ 191	0.69 ~ 0.71
120	109 ~ 116	0.44 ~ 0.46
140	68 ~ 74	0.28 ~ 0.35

Cause
Low voltage on engine coolant temperature sensor

Details

A voltage low signal was detected (incompatible with signals from other sensors) coming from engine coolant temperature sensor.
There is possibly an alteration of sensor's resistance or a short circuit to ground

Strategy

Above 100 °C	Yellow light turns ON
Above 105 °C	Engine power is reduced by 50%
Above 115 °C	Engine power is reduced by 100%

ECM uses this signal for selection of:
- Strategies for cold start and hot start;
- Correct injection timing;
- Correct start of injection angle.

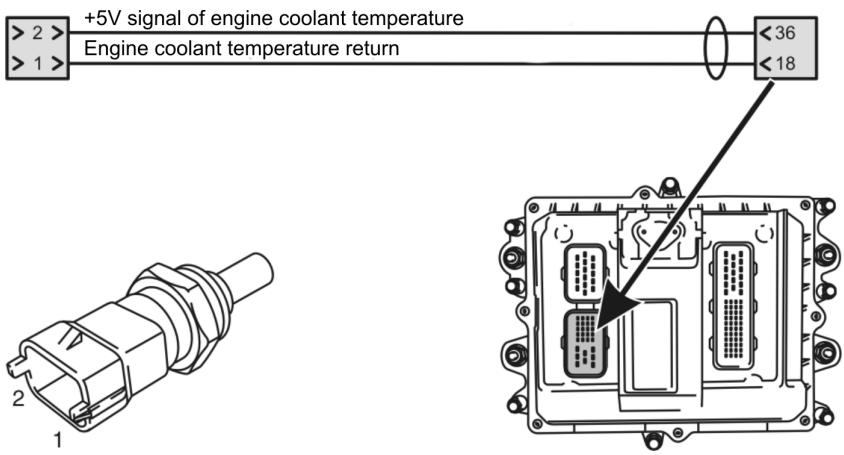

Troubleshooting Routine

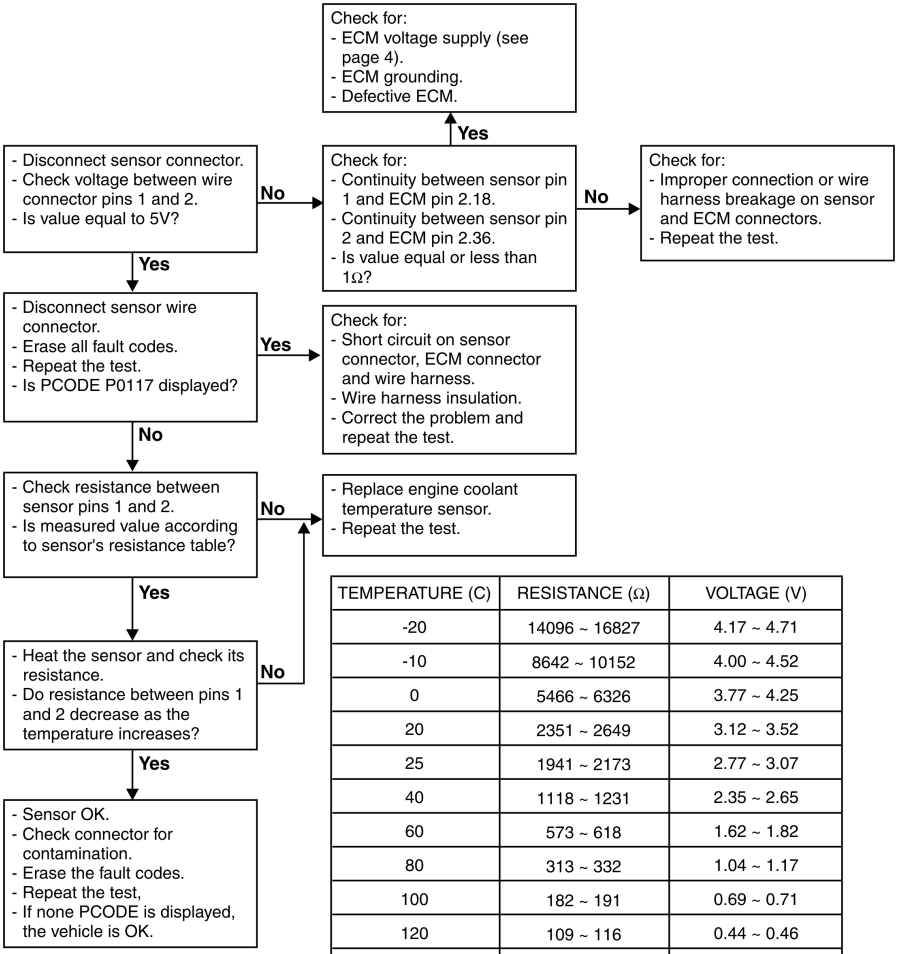

TEMPERATURE (C)	RESISTANCE (Ω)	VOLTAGE (V)
-20	14096 ~ 16827	4.17 ~ 4.71
-10	8642 ~ 10152	4.00 ~ 4.52
0	5466 ~ 6326	3.77 ~ 4.25
20	2351 ~ 2649	3.12 ~ 3.52
25	1941 ~ 2173	2.77 ~ 3.07
40	1118 ~ 1231	2.35 ~ 2.65
60	573 ~ 618	1.62 ~ 1.82
80	313 ~ 332	1.04 ~ 1.17
100	182 ~ 191	0.69 ~ 0.71
120	109 ~ 116	0.44 ~ 0.46
140	68 ~ 74	0.28 ~ 0.35

Cause
High voltage on engine coolant temperature sensor.

Details

A voltage high signal was detected (incompatible with signals from other sensors) coming from engine coolant temperature sensor. There is possibly a biased of sensor's resistance or a short circuit on wire harness.

Strategy

Above 100 °C	Yellow light turns ON.
Above 105 °C	Engine power is reduced by 50%.
Above 115 °C	Engine power is reduced by 100%.

ECM uses this signal for selection of:

- Strategies for cold start and hot start;
- Correct injection timing;
- Correct start of injection angle.

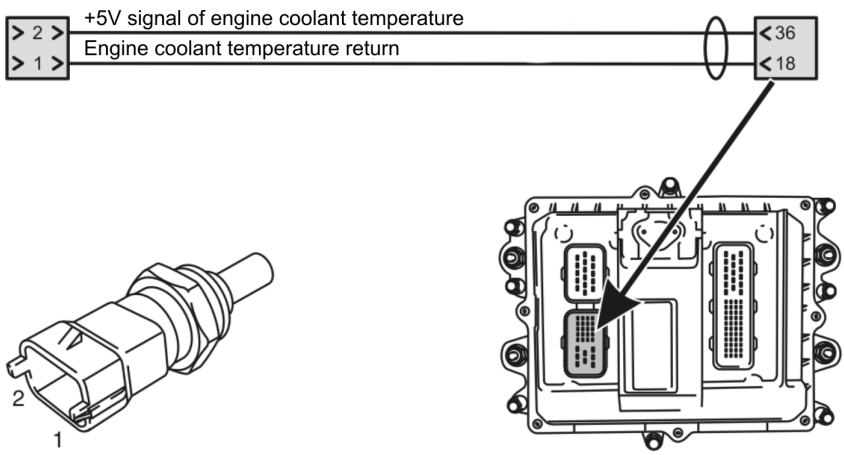

Troubleshooting Routine

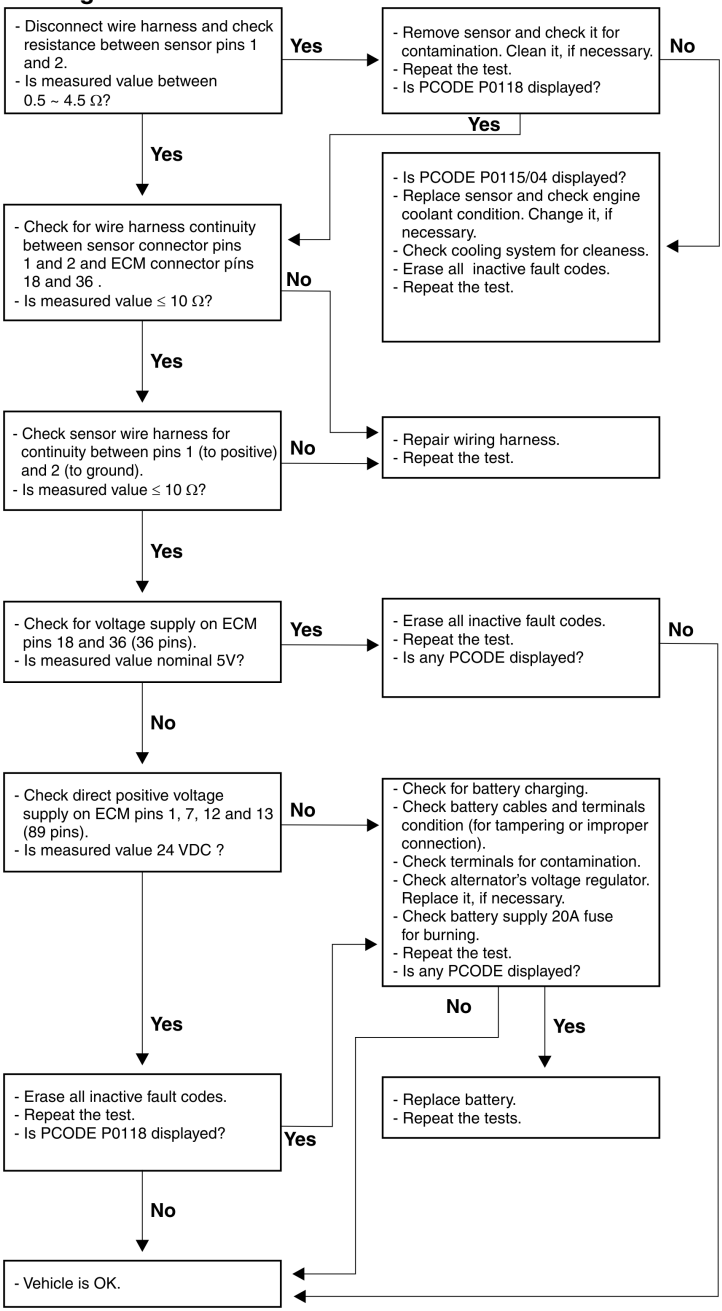

Cause
Missing signal from accelerator position sensor.

Details

Possibly the circuit or accelerator pedal sensor is in an open circuit condition, with no connection to ECM.
Create an inverse defect according to Troubleshooting Routine in order to locate the failure.

Strategy

If this signal is missing, engine speed will be fixed in 1200 rpm.
Yellow light turns ON.
• ECM uses this signal to validate idle speed and to change rpm according to driver's request.

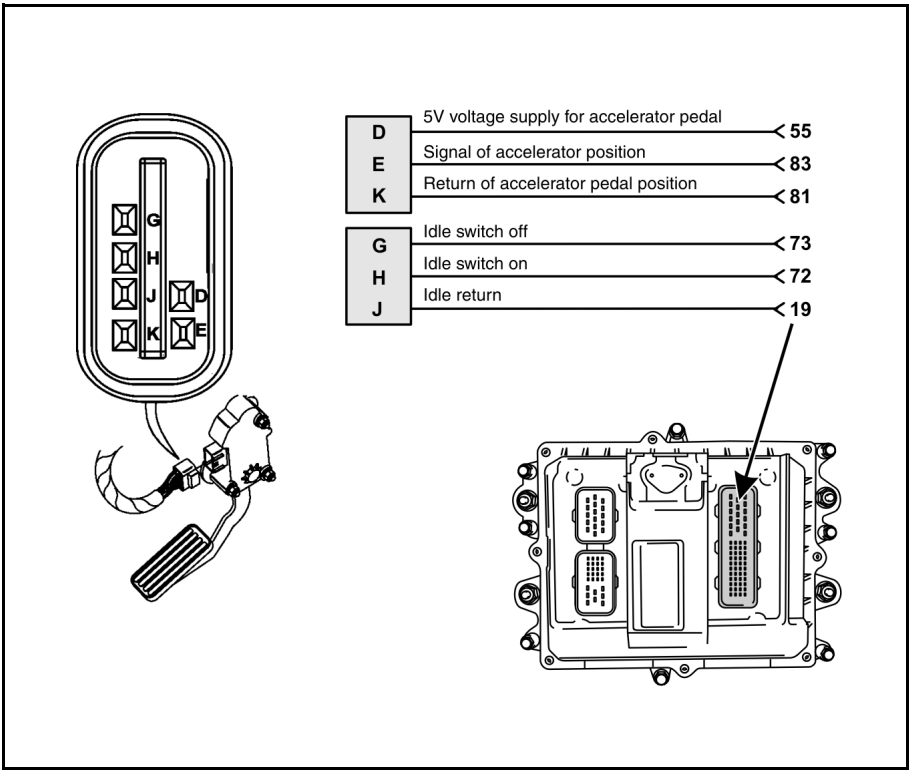

Troubleshooting Routine

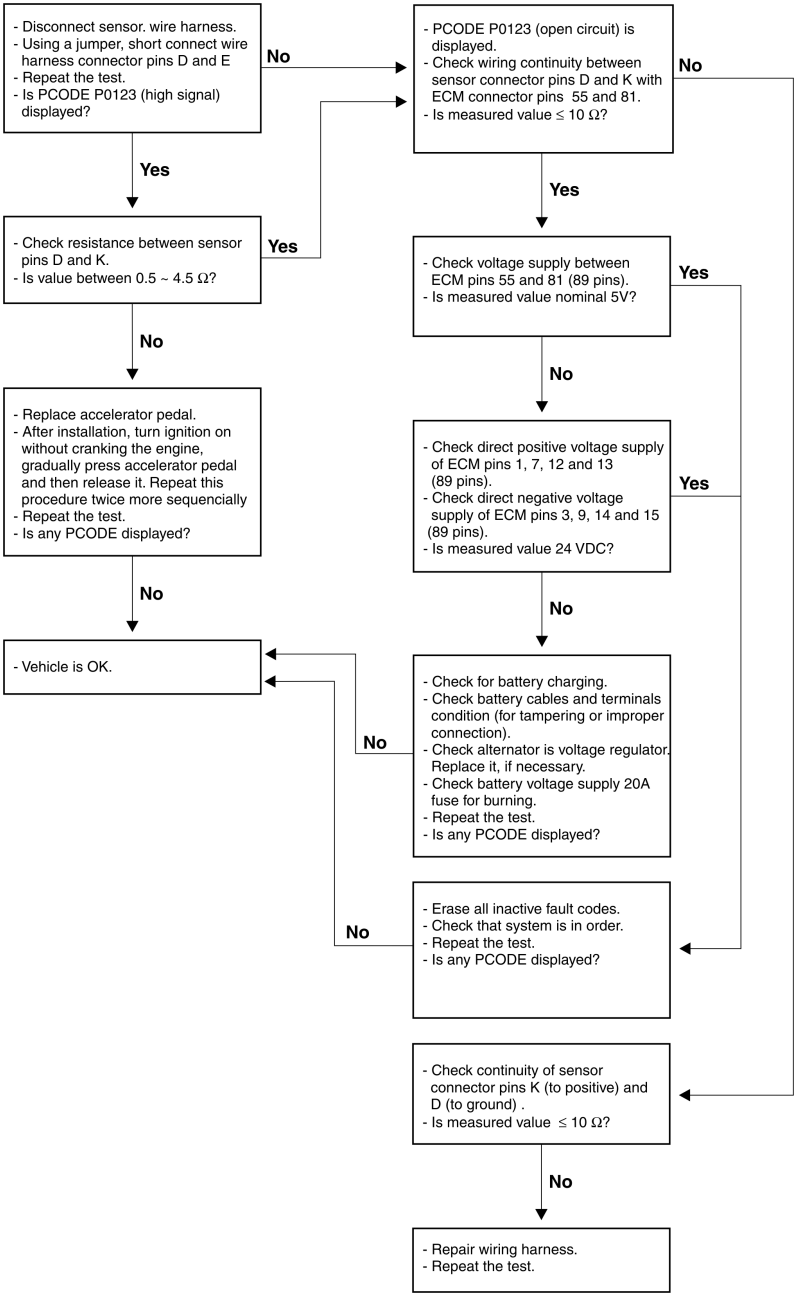

Cause
Low voltage on accelerator position sensor.

Details

A voltage low signal was detected coming from accelerator pedal sensor.
There is possibly an alteration of sensor's resistance or a short circuit to ground.

Strategy

If this signal is missing, engine speed will be fixed in 1200 rpm.
Yellow light turns ON.
• ECM uses this signal to validate idle speed and to change rpm according to driver's request.

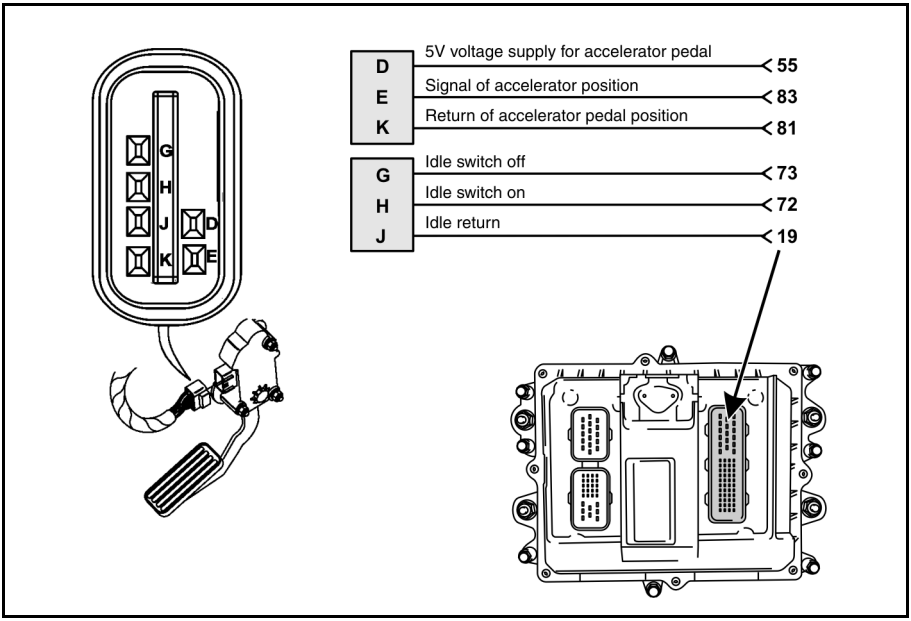

Troubleshooting Routine

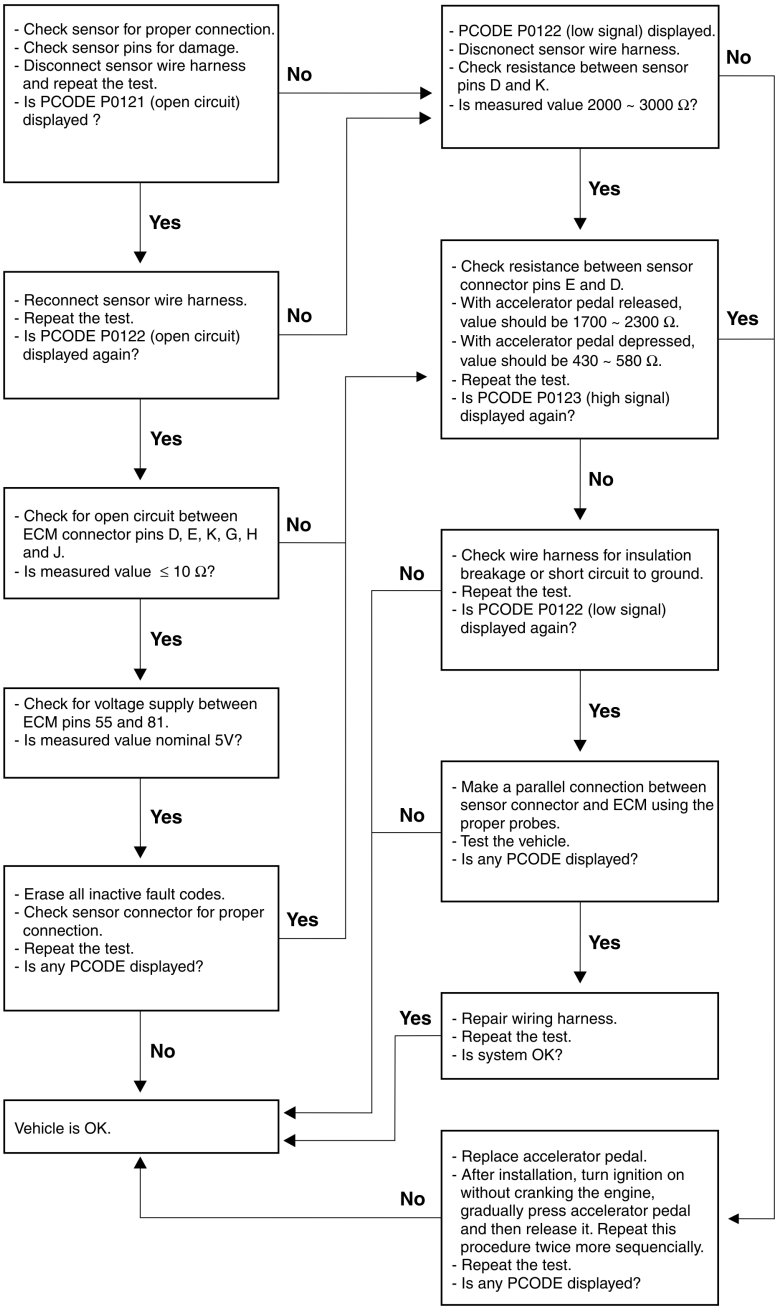

Cause
High voltage on accelerator position sensor

Details

A voltage high signal was detected coming from accelerator pedal sensor.
There is possibly a biased of sensor's resistance or a short circuit to positive battery voltage.

Strategy

Engine speed will be fixed in 1200 rpm (limp home strategy).
Yellow light turns ON.
• ECM uses this signal to validate idle speed and to change rpm according to driver's request.

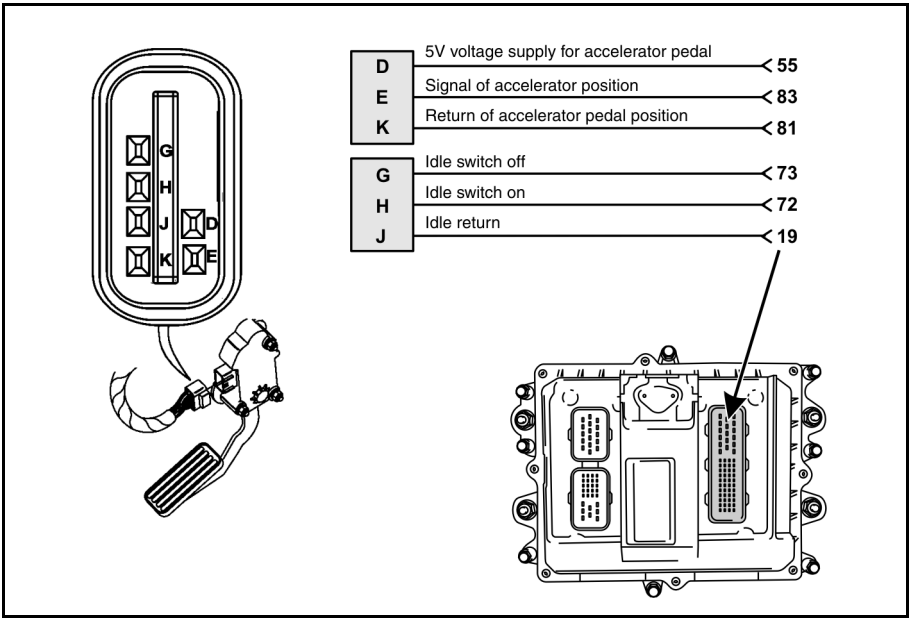
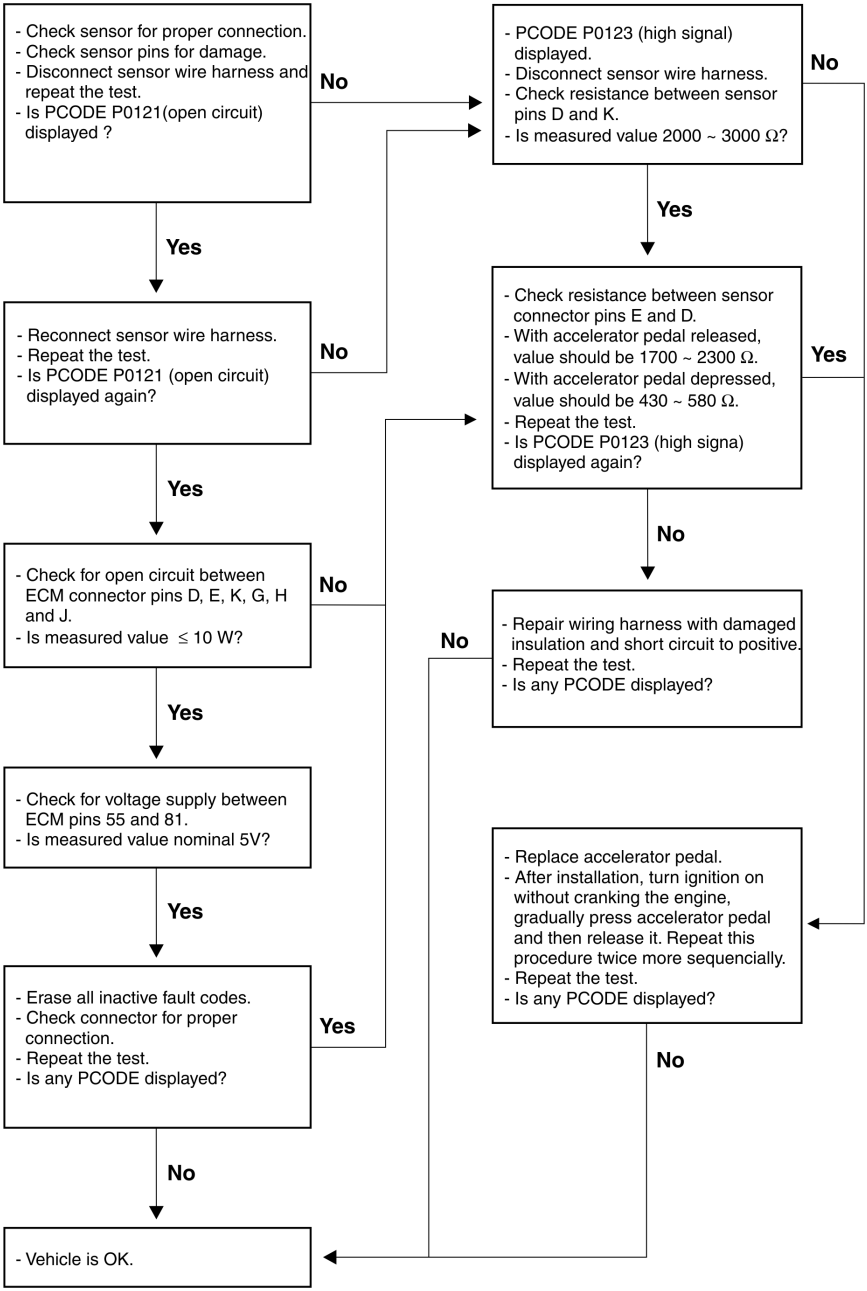
Troubleshooting Routine