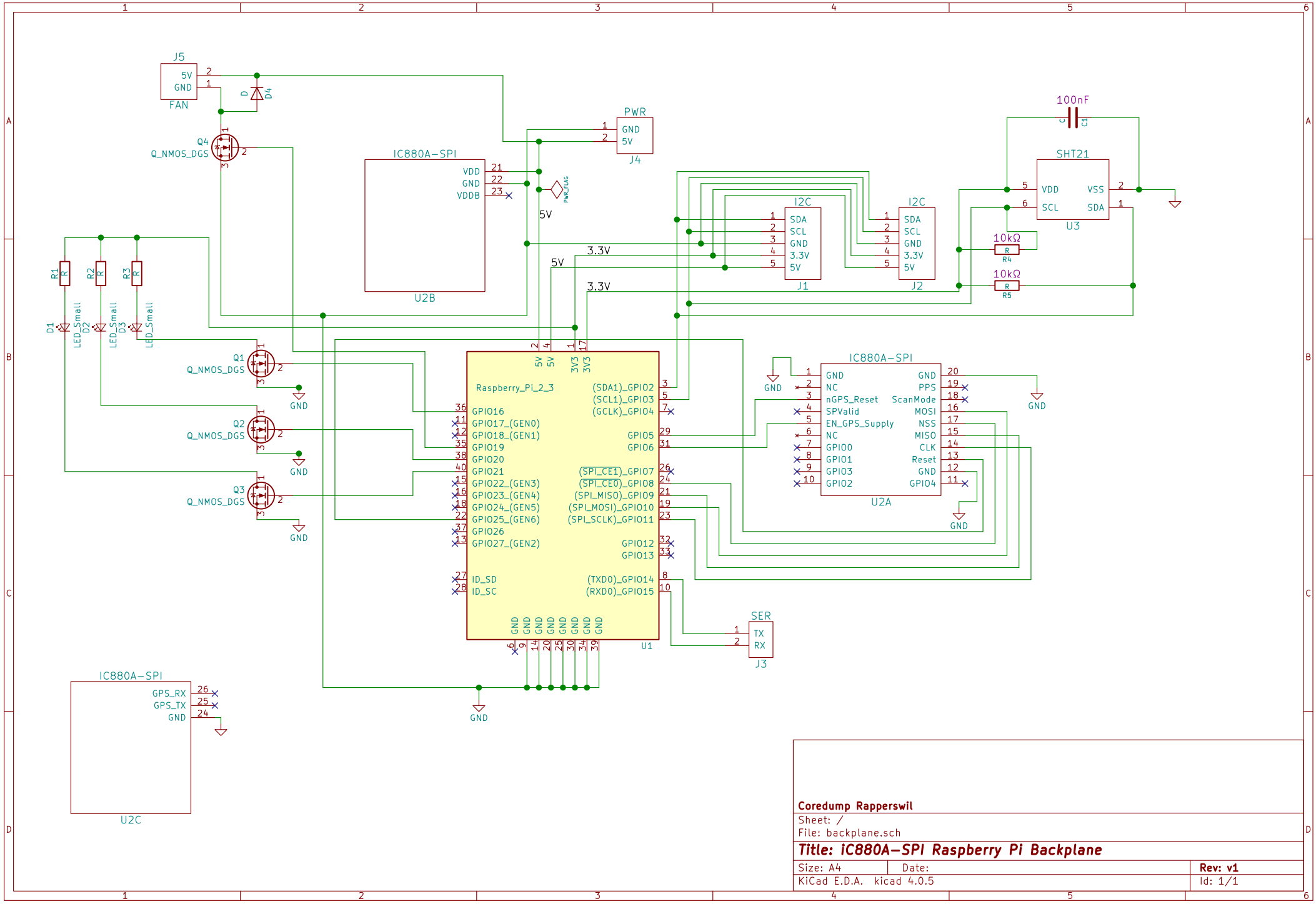

Coredump Rapperswil

Sheet: /

File: backplane.sch

Title: iC880A-SPI Raspberry Pi Backplane

Size: A4	Date:	Rev: v1
KiCad E.D.A. kicad 4.0.5		Id: 1/1