STRUCTURAL NOTES:

GOVERNING CODES & SPECIFICATIONS:
2019 CHICAGO BUILDING CODE (IBC) w/ LOCAL AMENDMENTS
AMERICAN INSTITUTE OF STEEL CONSTRUCITON (AISC)
AMERICAN CONCRETE INSTITUTE (ACI)
AMERICAN WELDING SOCIETY (AWS)

LATEST SUPPLEMENTS AND REVISIONS, THERETO.

DESIGN LOADING:

ROOF LOADS:

DEAD	
ROOFING	6 PSF
INSULATION	3 PSF
1 1/2" METAL DECK	2 PSF
CEILING/ELEC	3 PSF
MECH/P/FP	5 PSF
MISC.	3 PSF
GREEN ROOF	40 PSF
LIVE	
MINIMUM ROOF LIVE LOAD	20 PSF
ASSEMBLY LOAD	100 PSF
SNOW	
MINIMUM SNOW LOAD	30 PSF
FLAT ROOF SNOW LOAD + DRIFT	17.5 PSF + DRIFT

RESIDENTIAL FLOOR

DEAD	
4" LW CONC ON 2" STEEL DECK	34 PSF
1/2" CONC PONDING	5 PSF
SELF WEIGHT OF STEEL	5 PSF
FLOOR FINISH	2 PSF
CEILING/ELEC	3 PSF
MECH/P/FP	5 PSF
LIVE	
RESIDENTIAL LIVING AREAS	40 PSF
PARTITION	15 PSF
STORAGE	125 PSF
MECHANICAL (CHILLER SUPPORT)	150 PSF
PUBLIC AREAS	100 PSF
CORRIDORS	TO MATCH AREA SERVED

DESIGN CRITERIA:

ASCE 7 DESIGN CATEGORIES	
RISK CATEGORY	II
SURFACE ROUGHNESS	B
EXPOSURE CATEGORY	B
SNOW LOADS	
GROUND SNOW LOAD	25 PSF
EXPOSURE FACTOR	1.0
THERMAL FACTOR	1.0
IMPORTANCE FACTOR	1.0
WIND LOADS	
ANALYSIS METHOD	ANALYTICAL PROCEDURE
BASIC WIND SPEED	107 MPH
INTERNAL PRESSURE COEF.	+/-0.18

COMPONENT & CLADDING WIND LOADS ON WALLS

TRIBUTARY AREA (SF)		PRESSURE (PSF)	SUCTION (PSF)
10	INTERIOR	+27.7	-27.7
	CORNER	+27.7	-50.7
500	INTERIOR	+20	-22.5
	CORNER	+20	-29.1

CORNER WIDTH = 10'-0"

COMPONENT & CLADDING WIND LOADS ON ROOF

TRIBUTARY AREA (SF)		PRESSURE (PSF)	SUCTION (PSF)
10	INTERIOR	16.0	-40.5
	PERIMETER	26.4	-63.5
	CORNER	26.4	-63.5
200	INTERIOR	16.0	-30.7
	PERIMETER	21.4	-49.8
	CORNER	21.4	-49.8

PERIMETER WIDTH = 10'-0"

SEISMIC LOADS	
DESIGN CATEGORY	B
IMPORTANCE FACTOR	1.0
SITE SOIL CLASSIFICATION	D
SPECTRAL RESPONSE ACCELERATION PARAMETERS	
S_S =	0.125
S_1 =	0.066
S_{DS}=	0.133
S_{D1}=	0.103
C_S =	0.07
LATERAL FORCE RESISTING SYSTEM	
• ORDINARY REINFORCED MASONRY SHEAR WALLS	R = 2.0
SEISMIC ANALYSIS PROCEDURE	EQUIVALENT LATERAL FORCE PROCEDURE

COORDINATION:
1. ALL DIMENSIONS SHOWN ON THE STRUCTURAL DRAWINGS SHALL BE CHECKED AGAINST THE ARCHITECTURAL, MECHANICAL, AND ELECTRICAL DRAWINGS, BY THE CONTRACTOR, AND ANY DISCREPANCIES ARE TO BE REPORTED IMMEDIATELY TO THE ARCHITECT.
2. CONTRACTOR TO VERIFY ALL DIMENSIONS AT JOB SITE BEFORE FABRICATION
3. SHOP DRAWINGS OF THE STRUCTURAL ITEMS SHALL BE SUBMITTED BEFORE FABRICATION, FOR REVIEW BY THE STRUCTURAL ENGINEER.
4. DETAILS, SECTION MARKS, AND NOTES SHOWN ON THESE DRAWINGS SHALL APPLY TO ALL SIMILAR CONDITIONS WHETHER THE DETAILS, SECTION MARKS, AND NOTES ARE REPEATED OR NOT THROUGHOUT THE STRUCTURAL DRAWINGS.
5. THE INFORMATION CONTAINED ON THE STRUCTURAL DRAWINGS IS, IN ITSELF, INCOMPLETE AND VOID UNLESS USED IN CONJUNCTION WITH ALL OF THE CONTRACT DOCUMENTS AND ALL SPECIFICATIONS, TRADE PRACTICES, OR APPLICABLE STANDARDS, CODES, ETC., INCORPORATED THEREIN BY REFERENCE.
6. SPECIFICATIONS ARE AN INTEGRAL PART OF CONTRACT DOCUMENTS. IN CASE OF DISCREPANCIES BETWEEN SPECIFICATIONS AND DRAWINGS THE CONTRACTOR SHALL REQUEST CLARIFICATION FROM THE ENGINEER BEFORE PROCEEDING WITH THE WORK.
7. EXISTING CONDITIONS AND RELATED DIMENSIONS INDICATED ON THE DRAWINGS ARE PROVIDED FOR INFORMATION ONLY AND SHALL BE FIELD VERIFIED PRIOR TO COMMENCING WORK. SUBMIT CONDITIONS THAT DIFFER FROM THAT INDICATED ON DRAWINGS TO ARCHITECT FOR REVIEW PRIOR TO COMMENCING WORK.
8. THE CONTRACTOR AND SUBCONTRACTORS SHALL PROVIDE ALL WORK, LABOR, AND MATERIALS, WHICH ANY SECTION OR PART OF THE DRAWINGS, SPECIFICATIONS, OR CONDITIONS REQUIRE HIM TO PROVIDE, REGARDLESS OF WHETHER SUCH REQUIREMENT IS OR IS NOT FAITHFULLY REPEATED IN OTHER PARTS OF THE DRAWINGS AND SPECIFICATIONS.
9. CONTRACTOR SHALL COORDINATE ALL PITCHES AND DEPRESSIONS IN THE FLOOR SLABS, AND OPENINGS IN THE FOUNDATION WALLS, WITH THE PERTINENT TRADES, AND SHALL REVIEW LOCATIONS OF SUCH OPENINGS AS THEY MAY RELATED TO THE WEAKENING OF THE STRUCTURE.
10. SLEEVES FOR OPENINGS SHALL BE PROVIDED BY THE RELEVANT TRADE.
11. BURNING OF STRUCTURAL STEEL, AT THE SITE, IN ORDER TO ACCOMMODATE THE MECHANICAL, ELECTRICAL, PLUMBING AND FIRE PROTECTION TRADES WILL NOT BE PERMITTED.
12. THE STRUCTURAL DRAWINGS AND SPECIFICATIONS REPRESENT THE FINISHED STRUCTURE AND, UNLESS NOTED OTHERWISE, DO NOT INDICATE METHOD OF CONSTRUCTION.
13. THE STRUCTURAL ENGINEER HAS NO CONTROL OVER OR CHARGE OF, AND SHALL NOT BE RESPONSIBLE FOR THE MEANS, METHODS, PROCEDURES, AND TECHNIQUES OF CONSTRUCTION OR FOR SAFETY PRECAUTIONS AND PROGRAMS IN CONNECTION WITH THE WORK, NOR DOES HE HAVE ANY RIGHT OR POWER TO STOP THE WORK.
14. THE USE OF THESE PLANS AND SPECIFICATIONS SHALL BE RESTRICTED TO THE ORIGINAL SITE FOR WHICH THEY WERE PREPARED. ANY REPRODUCTION OR DISTRIBUTION IS EXPRESSLY LIMITED TO SUCH USE. ANY OTHER REPRODUCTION, REUSE, OR DISCLOSURE BY ANY METHOD, IN WHOLE OR IN PART, OR FOR ANY OTHER PURPOSE OTHER THAN THAT AS A CONTRACT DOCUMENT, IS PROHIBITED.
15. DO NOT SCALE DRAWINGS.

EXCAVATION:
1. PROVIDE TEMPORARY SHEETING AS REQUIRED IF THE NATURE OF THE MATERIAL DOES NOT ALLOW FOR GRADUAL SLOPING TO THE EXCAVATION.
2. REMOVE ALL SOFT, LOOSE, FILL, OR ORGANIC MATERIAL WHICH MAY BE IN THE FINAL GRADING BENEATH THE BUILDING SLAB.

ALLOWABLE SOIL BEARING PRESSURE:
1. FOUNDATIONS HAVE BEEN DESIGNED FOR A NET ALLOWABLE SOIL BEARING OF 2,500 PSF BASED ON THE GEOTECHNICAL INVESTIGATION BY GEI CONSULTANTS DATED NOVEMBER 16, 2021 (PROJ # 2102888). RECOMMENDATIONS THEREIN MUST BE STUDIED BEFORE PROCEEDING WITH ANY FOUNDATION WORK INCLUDING SITE PREPARATION, EXCAVATION, AND MINIMUM EXTERIOR FOOTING DEPTH.
2. ALL BEARING ALLOWABLES SHALL BE FIELD VERIFIED BY A QUALIFIED SOIL TESTING LABORATORY.
3. IF FOR ANY REASON THE INDICATED BEARING ALLOWABLE IS NOT ATTAINABLE AT ELEVATIONS SHOWN ON THE DRAWINGS, THE ARCHITECT/ENGINEER SHALL BE NOTIFIED IMMEDIATELY.
4. BEARING SHALL BE ON VIRGIN, UNDISTURBED NATURAL MEDIUM DENSE GRANULAR SOILS, STIFF COHESIVE SOILS, OR IF FILL IS REQUIRED, IT SHALL BE APPROVED FOR USE BY THE PROJECT TESTING LABORATORY, AND SHALL BE COMPACTED IN ACCORDANCE WITH APPROPRIATE ASTM STANDARDS TO OBTAIN REQUIRED ALLOWABLE BEARING PRESSURE.

BACKFILLING:
1. ALL BACKFILL MATERIALS ALONG FOUNDATION WALLS AND UNDER BUILDING SLABS SHALL BE FREE DRAINING AND SUBJECT TO THE REVIEW OF THE ARCHITECT/ENGINEER.
2. BACKFILLING SHALL BE DONE EVENLY ON BOTH SIDES OF WALLS.
3. RETAINING WALLS SHALL BE BACKFILLED ONLY AFTER HAVING REACHED DESIGN STRENGTH OR WHILE BEING TEMPORARILY BRACED UNTIL FINAL CURING OF ITS FINAL SUPPORT.
4. FILL MATERIALS FOR ALL SLAB AREAS SHALL BE PLACED IN LAYERS NOT EXCEEDING 9" AND COMPACTED TO 95% OF THE MAXIMUM DRY DENSITY IN ACCORDANCE WITH ASMT D1557, UNTIL FINAL GRADE IS ATTAINED.
5. ALL SLAB ON GRADE AREAS SHALL BE PROOF ROLLED WITH THE HEAVIEST EQUIPMENT AVAILABLE (25 TONS) AND ALL SOFT SPOTS SHALL BE REMOVED AND REPLACED WITH APPROVED FILL MATERIALS, TO THE REQUIRED GRADES.

CONCRETE:
1. ALL CONCRETE SHALL BE DESIGNED, MIXED, AND PLACED IN ACCORDANCE WITH ACI RECOMMENDATIONS, REQUIREMENTS, AND STANDARDS.
2. CONTRACTOR SHALL PROVIDE THE ARCHITECT/ENGINEER SUFFICIENT TIME TO ALLOW FOR REVIEW OF THE MIX DESIGN AND CYLINDER TEST RESULTS, AND SHALL NOT PROCEED WITHOUT ARCHITECT/ENGINEER COMMENT.
3. CEMENTITIOUS MATERIAL - READY MIX SUPPLIER MAY SUBSTITUTE FLY ASH AS 25% OF THE TOTAL CEMENT MIX TO MAINTAIN THE WATER CEMENT RATIO AND MINIMUM STRENGTHS NOTED.
4. CALCIUM CHLORIDE, OR ADMIXTURES CONTAINING THE SAME, SHALL NOT BE PERMITTED.
5. CONCRETE MAY CONTAIN WATER REDUCING ADMIXTURE AND ALL CONCRETE SUBJECT TO FREEZE-THAW SHALL BE AIR ENTRAINED.
6. SEE CIVIL DRAWINGS AND SITE WORK SPECIFICATIONS FOR SITE WORK CONCRETE STRENGTHS, I.E. SIDEWALKS, CURBS, ETC.
7. PROVIDE CONCRETE WITH 28 DAY COMPRESSIVE STRENGTHS AS FOLLOWS:

LOCATION:	f'c @ 28 DAYS	MAX W/C RATIO	AIR CONTENT
LEAN CONCRETE FILL	500 PSI (1BAG MIN)	--	--
FOUNDATION WALLS	4500 PSI (5.5 BAG MIN)	0.45	--
FOOTINGS	5000 PSI (6 BAG MIN)	0.40	--
INT. SLABS ON GRADE	4000 PSI (5.5 BAG MIN)	0.45	--
EXT. STOOPS AND SLABS ON GRADE	5000 PSI (6 BAG MIN)	0.40	6% +/- 1.5%
CONCRETE ON COMPOSITE DECK (LW)	3000 PSI (4.5 BAG MIN)	0.45	--

CONCRETE SLAB-ON-GRADE AND WALL CONSTRUCTION JOINTS:
1. LIMIT LENGTHS OF WALL PLACEMENTS TO NO MORE THAN 60 FEET.
2. COORDINATE SLAB FINISHES WITH ARCHITECTURAL DRAWINGS AND PROJECT SPECIFICATIONS, NOTE AREAS INDICATED ON THE ARCHITECTURAL/STRUCTURAL DRAWINGS WHICH MAY REQUIRE A HAND RUB FINISH OF EXPOSED CONCRETE SURFACES.
3. CONTRACTOR TO SUBMIT A LAYOUT OF SLAB CONTROL JOINTS FOR REVIEW BY THE ARCHITECT/ENGINEER.
4. SLAB CONSTRUCITON JOINTS SHALL BE A BEVELED FORMED KEYWAY AT MID SLAB DEPTH. KEYWAYS AT WALL JOINTS AND WALL TO FOOTING WILL BE A FORMED KEYWAY.
5. HOLD ALL WWR 1" CLEAR FROM TOP OF SLAB AND 1" CLEAR FROM CONTROL AND CONSTRUCTION JOINTS.

CONCRETE REINFORCEMENT:
1. ASTM A615-60; PLACE TO ACI CLEARANCES UNLESS DETAILED OTHERWISE.
2. ALL REINFORCING SHALL BE PLACED TO CLEARANCES PER THE ACI AND IN ACCORDANCE WITH THE RECOMMENDATIONS OF ACI AND THE CONCRETE REINFORCING INSTITUTE (CRSI).
3. SUBMIT CONCRETE REINFORCING SHOP DRAWINGS TO THE ENGINEER FOR REVIEW PRIOR TO FABRICATION/INSTALLATION.
4. PROVIDE BAR SUPPORTS AND OTHER ACCESSORIES IN ACCORDANCE WITH CRSI RECOMMENDATIONS AND STANDARD PRACTICES, AND AS NECESSARY TO HOLD REINFORCING IN PROPER POSITION DURING CONCRETING.
5. REINFORCING SHALL BE CLEANED OF ALL OIL, SCALE, RUST, ETC., WHICH MAY IMPAIR BOND.
6. PLACE "L" BARS AT ALL CORNERS AND WALL INTERSECTIONS. SIZE AND SPACING TO MATCH THOSE OF THE HORIZONTAL REINFORCING DETAILED. PROVIDE ADDITIONAL VERTICAL BARS AS REQUIRED TO SUPPORT OUTSIDE CORNER "L" BARS.
7. PLACE 2 - #5 ADDITIONAL BARS ALL AROUND WALL OPENINGS. EXTEND 2'-0" BEYOND OPENING EDGE.
8. ALL EMBEDMENT LENGTHS AND LAPS SHALL BE AS REQUIRED BY ACI 318, UNLESS OTHERWISE NOTED.
9. MINIMUM EMBEDMENT FOR #6 BARS AND SMALLER TO BE 38 BAR DIAMETERS OR 24", WHICHEVER IS GREATER. MINIMUM EMBEDMENT FOR #7 BARS AND LARGER TO BE 47 BAR DIAMETERS.
10. MINIMUM LAP LENGTH FOR #6 BARS AND SMALLER TO BE 50 BAR DIAMETERS. MINIMUM LAP LENGTH FOR #7 BARS AND LARGER TO BE 62 BAR DIAMETERS.
11. ASTM A185; WELDED WIRE REINFORCEMENT; PLAIN FLAT SHEET (WWF).
12. DETAIL ALL WWF IN ACCORDANCE WITH THE LATEST EDITION OF THE WELDED WIRE FABRIC MANUAL OF STANDARD PRACTICE (WRI MANUAL WP-100).
13. ALL WWF SHALL BE FLAT IN SHEETS AND SUPPORTED IN POSITION (CHAIR SUPPORTS) PRIOR TO CONCRETE PLACEMENT.
14. HOLD ALL WWR 1" CLEAR FROM TOP OF SLAB AND 1" CLEAR FROM CONTROL AND CONSTRUCTION JOINTS.

MASONRY:
1. ALL MASONRY FOR THIS PROJECT IS DESIGNED IN ACCORDANCE WITH TMS 402/602 / ACI 530 BUILDING CODE REQUIREMENTS FOR MASONRY CONSTRUCTION.
2. SUBMIT MASONRY SHOP DRAWINGS DETAILING CONCRETE MASONRY SIZES, REINFORCING, COURSING, AND CONTROL JOINT LOCATIONS TO THE ENGINEER FOR REVIEW PRIOR TO FABRICATION/INSTALLATION.
3. ALL MASONRY TO HAVE A MINIMUM 28 DAY NET AREA COMPRESSIVE ASSEMBLY STRENGTH, f'm = 2000 PSI
4. CONCRETE BLOCK - ASTM C90 (GRADE N, LIGHT WEIGHT DENSITY OR MEDIUM WEIGHT, 125 PCF MAXIMUM).
5. PORTLAND CEMENT MORTAR - ASTM C270.
6. GROUT - ASTM C476 (f'c = 2000 PSI MINIMUM).
7. VENEER FACE BRICK - ASTM C216.
8. MASONRY CONTRACTOR SHALL ATTAIN THE f'm STRENGTH INDICATED BY THE UNIT STRENGTH METHOD OR THE PRISM TEST METHOD AND SHALL AFFIRM THEIR INTENTION BY LETTER AND/OR TEST RESULT TO THE ARCHITECT/ENGINEER PRIOR TO START OF MASONRY WORK:
   A. UNIT STRENGTH METHOD - MASONRY CONTRACTOR SHALL PROVIDE THE FOLLOWING MINIMUM COMPONENT STRENGTHS TO ACHIEVE THE REQUIRED ASSEMBLY STRENGTH, f'm AS INDICATED.
      a. CONCRETE MASONRY UNITS:
         - MINIMUM INDIVIDUAL CONCRETE UNIT COMPRESSIVE STRENGTH W/ TYPE N MORTAR, f'cmu = 2650 PSI.
         - MINIMUM INDIVIDUAL CONCRETE UNIT COMPRESSIVE STRENGTH W/ TYPE S MORTAR, f'cmu = 2000 PSI.
      b. BRICK MASONRY UNITS:
         - MINIMUM INDIVIDUAL BRICK MASONRY UNIT COMPRESSIVE STRENGTH W/ TYPE N MORTAR, f'brick = 6200 PSI.
   B. PRISM TEST METHOD
      a. DETERMINE THE COMPRESSIVE STRENGTH OF CLAY MASONRY AND CONCRETE MASONRY BY THE PRISM TEST METHOD IN ACCORDANCE WITH ASTM C1314.
9. ALL BLOCK CORES WITH VERTICAL REINFORCING SHALL BE FILLED 100% SOLID WITH GROUT.
10. BOND BEAMS AND LINTEL BLOCKS SHALL BE FILLED 100% SOLID WITH GROUT.
11. ALL BEARINGS OF LINTELS AND OTHER MEMBERS SHALL BE FILLED 100% SOLID WITH GROUT, AT LEAST 16" BELOW AND 12" EITHER SIDE OF BEARING.
12. IN NO CASE SHALL FILLING OF BLOCK CORES AND/OR OTHER VOIDS AND JOINTS WITH MORTAR BE ACCEPTABLE WHEN SOLID GROUTING IS DETAILED & INDICATED.
13. ALL MASONRY WALLS WHICH BYPASS OR ENCASE STEEL MEMBERS, SHALL BE ANCHORED WITH ADJUSTABLE MASONRY TIES UNLESS OTHERWISE DETAILED.
14. ALL LINTELS AND BEAMS BEARING ON MASONRY SHALL BEAR A MINIMUM OF 8" UNLESS NOTED OTHERWISE.
15. MASONRY WALLS SHALL BE BRACED ADEQUATELY TO WITHSTAND A WIND LOAD OF 20 PSF MINIMUM DURING CONSTRUCTION. CONTRACTOR IS RESPONSIBLE FOR THE BRACING.
16. COVER THE TOPS OF COMPLETED AND PARTIALLY COMPLETED MASONRY WALLS WITH WATERPROOF SHEETING WHEN CONSTRUCTION IS NOT IN PROGRESS.
17. LOAD BEARING MASONRY CONSTRUCTION WILL BE LAID IN RUNNING BOND PATTERN, CORNERS AND INTERSECTING WALLS WILL BE LAID IN OVERLAPPING PATTERN, UNO.
18. ALL MASONRY HEAD AND BED JOINTS SHALL BE 3/8" THICK, SEE SPECIFICATIONS FOR TOLERANCES.
19. WHEN SAW CUTTING MASONRY, THE MINIMUM HORIZONTAL DIMENSION OF A BLOCK OR BRICK SHALL NOT BE LESS THAN 3 5/8", MAINTAIN 3/8" HEAD JOINTS, DO NOT EXCEED 3/8" HEAD JOINT.
20. ALL WALLS, SINGLE WYTHE, COMPOSITE AND CAVITY, SHALL HAVE MECHANICAL METAL BONDED GALVANIZED HORIZONTAL JOINT REINFORCEMENT - PER THE PROJECT SPECIFICATIONS.
21. ALL REBAR EMBEDMENT LENGTHS AND LAPS IN MASONRY CONSTRUCTION SHALL BE AS REQUIRED BY ACI 530, UNLESS, OTHERWISE NOTED. HOWEVER, MINIMUM LAP LENGTHS TO BE 48 BAR DIAMETERS OR 24", WHICHEVER IS GREATER.
22. SEE PLANS FOR LOCATIONS OF CONTROL JOINTS, MASONRY JOINT REINFORCING TO BE DISCONTINUOUS AT CONTROL JOINTS, HORIZONTAL MASONRY BOND BEAMS AND REINFORCING WILL BE CONTINUOUS THROUGH MASONRY WALL CONTROL JOINTS.
23. CONTROL JOINTS TO TERMINATE AT THE BOTTOM SIDE OF REINFORCED BOND BEAMS, MASONRY BOND BEAMS AND REINFORCING SHALL BE CONTINUOUS THROUGH MASONRY WALL CONTROL JOINTS, UNO.

STRUCTURAL STEEL:
1. W SHAPES - ASTM A992
2. ALL PLATES, ANGLES, CHANNELS, BARS, AND THREADED RODS - ASTM A36
3. HSS ROUND AND RECTANGULAR SHAPES - ASTM A500, GRADE B
4. PIPE - ASTM A53, GRADE B
5. HP SHAPES - ASTM A572, GRADE 50
6. HIGH STRENGTH BOLTS - ASTM A325; PROVIDE MIN 3/4"Ø TYPE "X" BOLTS IN BEARING FOR ALL CONNECTIONS, UNO.
7. ANCHOR RODS - ASTM F1554 GRADE 36; PROVIDE 3/4"Ø HEADED ANCHOR RODS, EMBEDDED 9" MIN, UNO.
8. HEADED STUDS AND COMPOSITE SHEAR STUDS - ASTM A108
9. WELDING ELECTRODES - E70XX
10. ALL WELDING SHALL CONFORM TO STANDARDS OF AWS D1.1; ALL WELDING SHALL BE BY WELDERS QUALIFIED WITHIN THE PAST 12 MONTHS TO WELD IN THE REQUIRED POSITIONS, IN ACCORDANCE WITH AWS STANDARDS AND RECOMMENDATIONS.
11. SUBMIT STRUCTURAL STEEL SHOP DRAWINGS DETAILING MEMBER SIZE, LOCATION, AND CONNECTIONS TO THE ENGINEER FOR REVIEW PRIOR TO FABRICATION/INSTALLATION.
12. ALL STEEL SHALL BE FABRICATED, DETAILED, AND ERECTED IN ACCORDANCE WITH AISC SPECIFICATIONS LATEST EDITION, AND WITH THE AISC CODE OF STANDARD PRACTICE (IT IS UNDSTOOD THAT WHEREVER "OWNER" IS NOTED, REFERENCE IS TO THE SUBCONTRACTORS AS APPROPRIATE). SEE SPECIFICAITON FOR ADDITIONAL REQUIREMENTS, WHICH SHALL GOVERN.
13. FABRICATE BEAMS SO THAT ANY NATURAL CAMBER IS UPWARD AFTER ERECTION.
14. FIELD CUTTING OF STRUCTURAL STEEL SHALL NOT BE PERMITTED WITHOUT PRIOR WRITTEN APPROVAL BY THE STRUCTURAL ENGINEER.
15. WHERE CONNECTION DETAILS ARE COMPLETELY DETAILED ON THE DRAWINGS THEY SHALL BE INCORPORATED INTO THE FABRICATOR'S CONNECTION DESIGN. WHERE CONNECTIONS ARE NOT COMPLETELY DETAILED, THE FABRICATOR SHALL PROVIDE STANDARD AISC CONNECTION CAPABLE OF RESISTING 50% OF THE MEMBER'S MAXIMUM TOTAL UNIFORM LOAD PER AISC TABLES 3-6 THROUGH 3-9.
16. PROVIDE MINIMUM PLATE OR ANGLE LENGTH OF ONE-HALF THE T-DIMENSION OF THE MEMBER BEING SUPPORTED.
17. PROVIDE MINIMUM 5/16" THICK SINGLE PLATE SHEAR TAB FOR CONNECTION OF BEAM TO TUBE (HSS) COLUMN, EXCEPT WHERE DETAILED OR NOTED OTHERWISE ON THE DRAWINGS.
18. ALL UNFILLED STRUCTURAL TUBES (HSS) SHALL HAVE MINIMUM 1/4" CAP PLATES WITH WEATHER TIGHT WELDS ALL AROUND TO PREVENT THE ENTRY OF WATER.
19. PROVIDE 1/4"Ø DRAIN HOLE ABOVE BASE PLATE IN UNFILLED TUBES AND PIPES TO ALL FOR WATER TO EXIT.
20. ALL COLUMNS SHALL BE SET UPON NON-SHRINK GROUT WITH MINIMUM STRENGTH OF 9000 PSI @ 28 DAYS, USING SETTING PLATES, 1/4" THICK AND SAME SIZE AS BASE PLATE.
21. PROVIDE PLATES AT STEEL BEAMS FOR WELDING OF BRIDGING ANCHORS.
22. ALL BEAMS AND LINTELS SHALL BEAR A MINIMUM OF 8" UNLESS NOTED OTHERWISE.
23. ALL LINTEL BEAMS SHALL BE ANCHORED INTO MASONRY WITH L3x3x1/4 EACH SIDE OF WEB, TYPICAL UNLESS DETAILED.
24. ALL LINTELS COMPOSED OF 2 OR MORE SHAPES SHALL BE WELDED INTO ONE UNIT PRIOR TO INSTALLATION.
25. VERIFY LENGTHS AND ELEVATIONS OF ALL LINTELS WITH THE ARCHITECTURAL AND MECHANICAL DRAWINGS. PROVIDE LINTELS FOR ALL OPENINGS FOR WHICH THEY ARE REQUIRED WHETHER OR NOT SHOWN ON THE STRUCTURAL DRAWINGS. ADVISE ARCHITECT OF THESE OPENINGS TO ALLOW FOR REVIEW OF LINTEL MEMBER SIZE.
26. ALL STEEL SECTIONS WHICH ARE LOCATED WITHIN MASONRY WALLS SHALL HAVE MASONRY ANCHOR RODS WELDED TO THE APPROPRIATE FLANGES AND WEBS FOR ATTACHMENT, BY THE MASON, OF TRIANGULAR ANCHORS, TO BE LAID UP WITH THE MASONRY, SPACED AT 32" OC HORIZONTALLY AND 16" OC VERTICALLY OR AS OTHERWISE DETAILED ON THE ARCHITECTURAL AND STRUCTURAL DRAWINGS. COORDINATE REQUIREMENTS WITH TEH PERTINENT TRADES.
27. STRUCTURAL STEEL FABRICATOR SHALL PROVIDE ALL REQUIRED STEEL FOR ANY ROOF OPENING WHETHER SHOWN OR NOT ON THE STRUCTURAL DRAWINGS. COORDINATE REQUIREMENTS WITH THE PERTINENT TRADES.
28. CONTRACTOR SHALL BE RESPONSIBLE FOR PROVIDING ALL MEANS NECESSARY TO INSURE THE STABILITY OF THE STEEL FRAME DURING CONSTRUCTION, UNTIL ALL FINAL CONNECTIONS HAVE BEEN MADE, AND THE FRAME BECOMES SELF SUPPORTING AND STABLE.
29. ALL STEEL WHICH IS TO RECEIVE SPRAY FIREPROOFING SHALL BE LEFT UNPAINTED.
30. STEEL CONTRACTOR SHALL VERIFY LOCATIONS AND CONDITIONS OF ALL ANCHOR RODS SET FOR HIS USE. HE SHALL IMMEDIATELY NOTIFY THE ARCHITECT/ENGINEER OF ANY DIMENSIONAL DISCREPANCIES OR EXISTENCE OR CONDITIONS OF THE BOLTS WHICH WILL NOT ALLOW HIM TO PROPERLY ERECT THE STEEL.
31. HOT DIP GALVANIZE ALL STEEL EXPOSED TO WEATHER IN ACCORDANCE WITH ASTM A123, TOUCH UP WITH ZINC STICK OR ZINC PAINT CONFORMING TO TT-P-641.

COLD FORMED STEEL FRAMING:
1. THE ENGINEER OF RECORD IS DELEGATING THE DESIGN OF ALL COLD FORM STEEL FRAMING TO THE ENGINEER OF THE CONTRACTOR OR MATERIAL SUPPLIER/MANUFACTURER. THE SPECIALTY ENGINEER SHALL BE RESPONSIBLE FOR ALL COLD FORMED STEEL MEMBER AND CONNECTION DESIGN.
2. SUBMIT SHOP DRAWINGS AND CALCULATIONS SIGNED AND SEALED BY AN ILLINOIS LICENSED STRUCTURAL ENGINEER FOR REVIEW PRIOR TO COMMENCING WORK.
3. INFORMATION SHOWN ON THE STRUCTURAL DRAWINGS IS ONLY CONCEPTUAL AND SHALL BE USED IN CONJUNCTION WITH THE ARCHITECTURAL DRAWINGS AND SPECIFICATIONS TO DETERMINE THE FULL SCOPE OF COLD FORM STEEL FRAMING REQUIRED.
4. ALL STRUCTURAL COLD FORMED FRAMING MEMBERS, JOISTS, STUDS, TRACKS, BRIDGING, ETC., SHALL BE DESIGNED IN ACCORDANCE WITH THE LATEST EDITION OF THE AISI "SPECIFICATION FOR THE DESIGN OF COLD FORMED STEEL STRUCTURAL MEMBERS."
5. ALL WELDING SHALL BE IN ACCORDANCE WITH THE RECOMMENDATIONS OF THE FRAMING MATERIAL MANUFACTURER.
6. DEEP LEG TRACKS SHALL RUN AT THE TOP AND BOTTOM OF ALL WALLS. TRACK SHALL BE IN CONTINUOUS PIECES AS LONG AS PRACTICABLE.
7. ANY SPLICING OF TRACKS SHALL BE BY WELDING AND SHALL BE LOCATED OVER A STUD OR ON A SUPPORT.
8. BOTTOM TRACK SHALL BE SECURELY ANCHORED TO THE SUPPORT. STUDS SHALL BE FASTENED TO THE TRACK ON BOTH FLANGES.
9. ALL MEMBERS SHALL BE CUT SQUARELY TO PROVIDE FOR 100% BEARING AT ENDS.
10. MEMBERS SHALL BE HELD FIRMLY IN POSITION UNTIL PROPERLY FASTENED.
11. ALL STANDARD BRIDGING SHALL BE IN PLACE BEFORE APPLICATION OF CONSTRUCTION LOADS.
12. SPLICES IN STUDS WILL NOT BE PERMITTED.
13. WALL STUDS SHALL BE CAPABLE OF SUPPORTING THE INDICATED WIND LOAD WITH A MAXIMUM DEFLECTION OF L/360.

STEEL ROOF DECK:
1. PROVIDE DECK PROFILE AND GAGE AS INDICATED ON THE STRUCTURAL DRAWINGS, ALL ROOF DECK TO BE A MINIMUM 1 1/2", TYPE 'B', 20 GA STEEL DECK, UNLESS NOTED OTHERWISE.
2. DECK SHALL BE DESIGNED, FABRICATED, AND INSTALLED IN ACCORDANCE WITH THE REQUIREMENTS OF THE STEEL DECK INSTITUTE (SDI).
3. SUBMIT STEEL DECK SHOP DRAWINGS DETAILING DECK SPANS, CONNECTIONS, AND ACCESSORIES TO THE ENGINEER FOR REVIEW PRIOR TO FABRICATION/INSTALLATION
4. DECK SHALL PROVIDE 3 SPAN MINIMUM COVERAGE, UNLESS NOTED OTHERWISE.
5. STEEL ROOF DECK SHALL BE PRIME PAINTED, UNLESS NOTED OTHERWISE ON DRAWINGS OR THE SPECIFICATIONS. MANUFACTURER'S FINISH TO BE COMPATIBLE WITH THE FINISHED PAINTING OF THE EXPOSED DECK AREAS, SEE DRAWINGS AND REFLECTIVE CEILING PLAN.
6. ALL DECK SHALL HAVE NESTED SIDE LAPS AND ENDS.
7. ALL STEEL DECK WELDING SHALL BE IN ACCORDANCE WITH AWS D1.3 SPECIFICATIONS. WELD ELECTRODES WILL BE E60XX UNLESS OTHER MATCHING ELECTRODE IS REQUIRED BY AWS D1.3 FOR ACTUAL STEEL GRADES USED.
8. GALVANIZED ROOF DECK SHALL CONFORM TO ASTM A653 WITH MINIMUM YIELD STRENGTH OF 33 KSI. COATING DESIGNATION G60 MINIMUM COATING.
9. FASTEN DECK TO ALL SUPPORTING STEEL INCLUDING MISCELLANEOUS STEEL SHAPES USING 5/8" DIAMETER PUDDLE WELDS ON A 36/4 PATTERN AND AT 6" OC AT BUILDING PERIMETER SUPPORTS, WITH #10 TEK SCREW SIDELAP FASTENERS AT 24" OC MAXIMUM OR AT MIDSPAN MINIMUM, UNLESS NOTED OTHERWISE.
10. OPENINGS IN THE DECK UP TO 12" PERPENDICULAR TO THE RIBS NEED NOT BE REINFORCED. ALL OPENINGS IN THE DECK GREATER THAN 12" x 12" TO 18" x 18" SHALL BE REINFORCED WITH L2x2x3/16 WELDED TO THE DECK UNDERSIDE, EXCEPT IN EXPOSED AREAS.
11. OPENINGS UP TO 24" PERPENDICULAR TO THE RIBS SHALL BE REINFORCED WITH L3x3x1/4 MINIMUM ANGLES PLACED BELOW THE DECK. SEE ROOF FRAMING PLAN NOTES FOR ANGLE FRAME SIZES. LARGER OPENINGS SHALL BE FRAMED WITH MEMBERS SPANNING BETWEEN JOISTS, AND SUBJECT TO THE REVIEW OF THE ENGINEER.
12. SUSPENDED CEILING, LIGHT FIXTURES, MECHANICAL DUCTS, EQUIPMENT AND OTHER LOADS *SHALL NOT BE SUSPENDED OR SUPPORTED* FROM THE STEEL ROOF DECK.

COMPOSITE METAL DECK
1. PROVIDE DECK PROFILE AND GAGE AS INDICATED ON THE STRUCTURAL DRAWINGS, ALL COMPOSITE DECK TO BE MINIMUM 1 1/2", 20 GA, GALVANIZED COMPOSITE EMBOSSED DECK, UNLESS NOTED OTHERWISE.
2. DECK SHALL BE DESIGNED, FABRICATED, AND INSTALLED IN ACCORDANCE WITH THE REQUIREMENTS OF THE STEEL DECK INSTITUTE (SDI).
3. SUBMIT STEEL DECK SHOP DRAWINGS DETAILING DECK SPANS, CONNECTIONS, AND ACCESSORIES TO THE ENGINEER FOR REVIEW PRIOR TO FABRICATION/INSTALLATION.
4. DECK SHALL PROVIDE 3 SPAN MINIMUM COVERAGE, UNLESS NOT

STATEMENT OF SPECIAL INSPECTIONS

1. SPECIAL INSPECTIONS, STRUCTURAL OBSERVATIONS, AND TESTS OF STRUCTURAL ELEMENTS SHALL BE PERFORMED IN ACCORDANCE WITH CHAPTER 17 OF IBC 2015.
2. THE FOLLOWING TABLES REPRESENT THE MINIMUM REQUIRED LEVEL OF TESTING AND INSPECTION PER IBC 2015, CHAPTER 17 AND SHALL BE USED IN CONJUCTION WITH THE APPLICABLE MATERIAL STANDARDS WHERE REFERENCED. WHERE THE LOCAL AUTHORITY HAVING JURSIDICTION REQUIRES A GREATER LEVEL OF INSPECTION THAN LISTED, THOSE REQUIREMENTS SHALL BE FOLLOWED.

STRUCTURAL OBSERVATIONS (IBC 1704.6)

OBSERVATIONS	OBSERVATION REQUIREMENTS	APPLICABLE
STRUCTURAL OBSERVATIONS FOR SEISMIC RESISTANCE	FOR SDC D OR HIGHER, WHERE ONE OF THE FOLLOWING CONDITIONS EXIST: 1. RISK CATEGORY III OR IV. 2. HEIGHT OF STRUCTURE IS GREATER THAN 75 FT. 3. SDC E, RISK CATEGORY I OR II, AND GREATER THAN 2 STORIES. 4. WHEN SO DESIGNATED BY THE SEOR. 5. WHEN SUCH OBSERVATION IS SPECIFICALLY REQUIRED BY THE BUILDING OFFICIAL.	N
STRUCTURAL OBSERVATIONS FOR WIND REQUIREMENTS	FOR Vasd GREATER THAN 110 MPH, WHERE ONE OF THE FOLLOWING CONDITIONS EXIST: 1. RISK CATEGORY III OR IV. 2. HEIGHT OF STRUCTURE IS GREATER THAN 75 FT. 3. WHEN SO DESIGNATED BY THE SEOR. 4. WHEN SUCH OBSERVATION IS SPECIFICALLY REQUIRD BY THE BUILDING OFFICIAL.	N

SOILS AND FOUNDATIONS (IBC 1705.6, 1705.7, 1705.8, 1705.9)

ITEM	INSPECTION TASK	REFERENCE	FREQUENCY	APPLICABLE
EXCAVATIONS	VERIFY EXCAVATIONS ARE EXTENDED TO PROPER DEPTH AND HAVE REACHED PROPER MATERIAL.	GEOTECHNICAL REPORT	PERIODIC	Y
FILL PLACEMENT	PERFORM CLASSIFICATION AND TESTING OF COMPACTED FILL MATERIALS.	GEOTECHNICAL REPORT	PERIODIC	Y
	VERIFY USE OF PROPER MATERIALS, DENSITIES, AND LIFT THICKNESSES DURING PLACEMENT AND COMPACTION OF COMPACTED FILL.	GEOTECHNICAL REPORT	CONTINUOUS	Y
	PRIOR TO PLACEMENT OF COMPACTED FILL, INSPECT SUBGRADE AND VERIFY THAT THE SITE HAS BEEN PREPARED PROPERLY	GEOTECHNICAL REPORT	PERIODIC	Y
SHALLOW FOUNDATIONS	VERIFY MATERIALS BELOW SHALLOW FOUNDATIONS ARE ADEQUATE TO ACHIEVE THE DESIGN BEARING CAPACITY.	GEOTECHNICAL REPORT	PERIODIC	Y
DRIVEN DEEP FOUNDATIONS	VERIFY ELEMENT MATERIALS, SIZES, AND LENGTHS COMPLY WITH REQUIREMENTS		CONTINUOUS	N
	DETERMINE CAPACITIES OF TEST ELEMENTS AND CONDUCT ADDITIONAL LOAD TESTS, AS REQURIED.		CONTINUOUS	N
	INSPECT DRIVING OPERATIONS AND MAINTAIN COMPLETE AND ACCURATE RECORDS FOR EACH ELEMENT.		CONTINUOUS	N
	VERIFY PLACEMENT LOCATIONS AND PLUMBNESS, CONFIRM TYPE AND SIZE OF HAMMER, RECORD NUMBER OF BLOWS PER FOOT OF PENETRATION, DETERMINE REQUIRED PENETRATIONS TO ACHIEVE DESIGN CAPACITY, RECORD TIP AND BUTT ELEVATIONS, AND DOCUMENT ANY DAMAGE TO FOUNDATION ELEMENT.		CONTINUOUS	N
CAST-IN-PLACE CONCRETE DEEP FOUNDATIONS	INSPECT DRILLING OPERATIONS AND MAINTAIN COMPLETE AND ACCURATE RECORDS.		CONTINUOUS	N
	VERIFY PLACEMENT LOCATIONS AND PLUMBNESS, CONFIRM ELEMENT DIAMETERS, BELL DIAMETERS (IF APPLICABLE), LENGTHS, EMBEDMENT IN ROCK (IF APPLICABLE) AND ADEQUATE END-BEARING STRATA CAPACITY. RECORD CONCRETE GROUT VOLUMNS.		CONTINUOUS	N
HELICAL PILE FOUNDATIONS	VERIFY PLACEMENT LOCATIONS AND PLUMBNESS, INSTALLATION EQUIPMENT USED, PILE DIMENSIONS, TIP ELEVATIONS, FINAL DEPTH, FINAL INSTALLATION TORQUE, MAINTAIN COMPLETE AND ACCURATE RECORDS.	GEOTECHNICAL REPORT	CONTINUOUS	N

CONCRETE CONSTRUCTION (IBC 1705.3)

ITEM	INSPECTION TASK	REFERENCE	FREQUENCY	APPLICABLE
MIX DESIGN	REVIEW CONCRETE BATCH TICKETS TO CONFIRM USE OF APPROVED CONCRETE MIX DESIGN PRIOR TO PLACEMENT.	ACI 318	PERIODIC	Y
SAMPLING AND TESTING OF CONCRETE	PRIOR TO CONCRETE PLACEMENT, FABRICATE SPECIMENS FOR STRENGTH TESTS, PERFORM SLUMP AND AIR CONTENT TEST, AND DETERMINE THE TEMPERATURE OF THE CONCRETE.	ACI 318	CONTINUOUS	Y
FORMWORK	INSPECT FORMWORK FOR SHAPE, LOCATION, AND DIMENSIONS OF THE CONCRETE MEMBER BEING FORMED.	ACI 318	PERIODIC	Y
REINFORCING	INSPECT REINFORCEMENT FOR GRADE, SIZE, SPACING, COVER, COATING, AND LAPPING.	ACI 318	PERIODIC	Y
WELDED REINFORCING	VERIFY WELDABILITY OF REINFORCING BARS OTHER THAN ASTM A706 AND INSPECT SINGLE PASS FILLET WELDS UP TO A MAXIMUM OF 5/16".	ACI 318	PERIODIC	N
	INSPECT ALL OTHER WELDS ON REINFORCING BARS.	ACI 318	CONTINUOUS	N
ANCHORS CAST IN CONCRETE	VERIFY DIAMETER, LOCATION, EMBEDMENT, AND PROJECTION OF CAST IN PLACE ANCHOR RODS, BOLTS, AND HEADED STUDS.	ACI 318	PERIODIC	Y
POST INSTALLED MECHANICAL AND ADHESIVE ANCHORS IN HARDENED CONCRETE	VERIFY DIAMETER, LOCATION, EMBEDMENT, AND PROJECTION OF ANCHORS INSTALLED HORIZONTALLY OR IN UPWARDLY INCLINED ORIENTATIONS TO RESIST SUSTAINED TENSION LOADS.	ACI 318	CONTINUOUS	Y
	VERIFY DIAMETER, LOCATION, EMBEDMENT, AND PROJECTION OF ANCHORS FOR ALL CONDITIONS EXCEPT AS STATED ABOVE.	ACI 318	PERIODIC	Y
CONCRETE AND SHOTCRETE PLACEMENT	INSPECT CONCRETE AND SHOTCRETE PLACEMENT FOR PROPER APPLICATION TECHNIQUES AND CONSOLIDATION. CONFIRM HOT AND COLD WEATHER CONCRETING PROCEDURES ARE FOLLOWED WHEN REQUIRED.	ACI 318	CONTINUOUS	Y
CONCRETE CURING	VERIFY THAT SPECIFIED CONCRETE CURING PROCEDURES AND TEMPERATURES ARE BEING MET AND MAINTAINED.	ACI 318	PERIODIC	Y
POST-TENSIONED CONCRETE	VERIFY IN-SITU CONCRETE STRENGTH PRIOR TO STRESSING TENDONS AND PRIOR TO REMOVAL OF SHORES AND FORMS FROM BEAMS AND STRUCTURAL SLABS.	ACI 318	PERIODIC	N
PRESTRESSED CONCRETE	INSPECT APPLICATION OF PRESTRESSING FORCES AND GROUTING OF BONDED PRESTRESSING TENDONS	ACI 318	CONTINUOUS	N
	INSPECT ERECTION OF PRECAST CONCRETE MEMBERS	ACI 318	PERIODIC	N

STRUCTURAL STEEL (IBC 1705.2.1)

ITEM	INSPECTION TASK	REFERENCE	FREQUENCY	APPLICABLE
SHOP FABRICATED ITEMS	INSPECT SHOP FABRICATED ITEMS DURING FABRICATION. FABRICATOR IS EXCEMPT FROM SPECIAL INSPECTIONS OF FABRICATED ITEMS PROVIDED THEY MEET THE EXCEPTION REQUIREMENTS OF IBC SECTION 1704.2.5. REVIEW QUALITY CONTROL PROCEDURES AND CERTIFICATES OF COMPLIANCE FOR EXEMPT FABRICATORS	IBC 1704.2.5	PERIODIC	Y
MATERIAL IDENTIFICATION AND CERTIFICATION	VERIFY MATERIAL IDENTIFICATION MARKINGS CONFORM WITH ASTM STANDARDS AND PROJECT SPECIFICATIONS. CONFIRM MATERIAL CERTIFICATIONS	AISC 360 CH. N	PERIODIC	Y
BOLTING	VERIFY CORRECT FASTENER (GRADE, TYPE, BOLT LENGTH, WASHER, NUTS, ETC) AT JOINT DETAIL. CONFIRM PROPER INSTALLATION PROCEDURES AND TECHNIQUES ARE FOLLOWED AND ARE IN CONFORMANCE WITH THE RCSC SPECIFICATION. CONFIRM FASTENERS AND RELATED COMPONENTS ARE PROTECTED AND PROPERLY STORED.	AISC 360 CH. N RCSC SPEC.	PERIODIC	Y
	INSPECT INSTALLATION OF PRETENSIONED AND SLIP CRITICAL JOINTS WHEN INSTALLED USING TEH CALIBRATED WRENCH METHOD OR TURN-OF-NUT METHCOD	AISC 360 CH. N RCSC SPEC.	CONTINUOUS	N
WELDING	VERIFY WELDER QUALIFICATION AND CONTINUITY RECORDS	AISC 360 CH. N AWS D1.1	CONTINUOUS	Y
	VERIFY FIT UP, CONFIGURATION, EQUIPMENT, AND WELDING PROCEDURES	AISC 360 CH. N AWS D1.1	PERIODIC	Y
	VISUALLY INSPECT ALL WELDS AND CONFIRM WELDS MEET VISUAL ACCEPTANCE CRITERIA. VERIFY WELD SIZE, LENGTH, AND LOCATION.	AISC 360 CH. N AWS D1.1	CONTINUOUS	Y
	PERFORM ULTRASONIC TESTING ON COMPLETE JOINT PENETRATION (CJP) WELDS IN MATERIAL 5/16" THICK AND GREATER ON 100% OF CJP WELDS FOR STRUCTURES IN RISK CATEGORY III OR HIGHER AND 10% OF CJP WELDS FOR STRUCTURES IN RISK CATEGORY II.	AISC 360 CH. N AWS D1.1	CONTINUOUS	Y
	INSPECT PLACEMENT AND INSTALLATION OF STEEL HEADED STUD ANCHORS	AISC 360 CH. N AWS D1.1	CONTINUOUS	Y

COLD FORMED STEEL DECK (IBC 1705.2.2)

ITEM	INSPECTION TASK	REFERENCE	FREQUENCY	APPLICABLE
SHOP FABRICATED ITEMS	INSPECT SHOP FABRICATED ITEMS DURING FABRICATION. FABRICATOR IS EXCEMPT FROM SPECIAL INSPECTIONS OF FABRICATED ITEMS PROVIDED THEY MEET THE EXCEPTION REQUIREMENTS OF IBC SECTION 1704.2.5. REVIEW QUALITY CONTROL PROCEDURES AND CERTIFICATES OF COMPLIANCE FOR EXEMPT FABRICATORS	IBC 1704.2.5	PERIODIC	Y
STEEL DECK AND ACCESSORIES	VERIFY COMPLIANCE OF DECK AND ALL DECK ACCESSORIES WITH CONSTRUCTION DOCUMENTS, INCLUDING PROFILES, MATERIAL PROPERTIES, AND BASE METAL THICKNESS	SDI QA/QC	PERIODIC	Y
WELDING	VERIFY CONFORMANCE WITH AWS AND WPS. VERIFY MATERIAL, SIZE AND LOCATION OF PUDDLE WELDS AT SUPPORTS, SIDELAPS, AND PERIMETER AS REQUIRED.	SDI QA/QC	PERIODIC	Y
MECHANICAL FASTENING	VERIFY FASTENER SPACING, TYPE, AND INSTALLATION AT SUPORTS, SIDELAPS, AND PERIMETER AS REQUIRED. CONFIM THAT INSTALLATION IS IN ACCORDANCE WITH MANUFACTURER'S INSTRUCTIONS.	SDI QA/QC	PERIODIC	Y

OPEN-WEB STEEL JOISTS AND JOIST GIRDERS (IBC 1705.2.3)

ITEM	INSPECTION TASK	REFERENCE	FREQUENCY	APPLICABLE
SHOP FABRICATED ITEMS	INSPECT SHOP FABRICATED ITEMS DURING FABRICATION. FABRICATOR IS EXCEMPT FROM SPECIAL INSPECTIONS OF FABRICATED ITEMS PROVIDED THEY MEET THE EXCEPTION REQUIREMENTS OF IBC SECTION 1704.2.5. REVIEW QUALITY CONTROL PROCEDURES AND CERTIFICATES OF COMPLIANCE FOR EXEMPT FABRICATORS	IBC 1704.2.5	PERIODIC	Y
INSTALLATION OF OPEN WEB STEEL JOIST AND JOIST GIRDERS	VERIFY MEMBER SIZE, TYPE, LOCATION AND SPACING WITH CONSTRUCTION DOCUMENTS. INSPECT WELDED AND BOLTED END CONNECTIONS AND HORIZONTAL AND DIAGONAL BRIDGING.	SJI SPECIFICATIONS	PERIODIC	Y
STANDARD BRIDGING	CONFIRM BRIDGING IS IN CONFORMANCE WITH SJI STANDARDS, INCLUDING SPACING, SIZE, AND TYPE.	SJI SPECIFICATIONS	PERIODIC	Y
BRIDGING THAT DIFFERS FROM THE SJI SPECIFICATION	VERIFY BRIDGING SIZE, TYPE, LOCATION, AND SPACING WIH CONSTRUCTION DOCUMENTS.	SJI SPECIFICATIONS	PERIODIC	N

COLD FORM STEEL FRAMING (IBC 1705.2)

ITEM	INSPECTION TASK	REFERENCE	FREQUENCY	APPLICABLE
SHOP FABRICATED ITEMS	INSPECT SHOP FABRICATED ITEMS DURING FABRICATION. FABRICATOR IS EXCEMPT FROM SPECIAL INSPECTIONS OF FABRICATED ITEMS PROVIDED THEY MEET THE EXCEPTION REQUIREMENTS OF IBC SECTION 1704.2.5. REVIEW QUALITY CONTROL PROCEDURES AND CERTIFICATES OF COMPLIANCE FOR EXEMPT FABRICATORS	IBC 1704.2.5	PERIODIC	Y
MEMBERS AND MATERIALS	VERIFY MEMBER SIZE, TYPE, LOCATION AND SPACING WITH CONSTRUCTION DRAWINGS AND SPECIFCIATIONS.	AISI	PERIODIC	Y
CONNECTIONS	INSPECT WELDING AND FASTENER ATTACHMENTS.	AISI	PERIODIC	Y
COLD-FORMED STEEL TRUSSES	VERIFY TEMPORARY INSTALLATION OF RESTRAINT/BRACING AND THE PERMANENT INDIVIDUAL TRUSS MEMBER RESTRAINT/BRACING ARE INSTALLED IN ACCORDANCE WITH THE APPROVED TRUSS SUBMITTAL PACKAGE	IBC 1705.2.4	CONTINUOUS	N

MASONRY CONSTRUCTION (IBC 1705.4)

ITEM	INSPECTION TASK	REFERENCE	FREQUENCY	APPLICABLE
CERTIFICATE OF COMPLIANCE	VERIFY MATERIAL CERTIFICATES OF COMPLIANCE WITH APPROVED SUBMITTALS.	TMS 602-13	PERIODIC	Y
MINIMUM TESTING AND MATERIAL STRENGTH VERIFICATION	VERIFY MASONRY COMPRESSIVE STRENGTH, f'm MEETS THE PROJECT SPECIFICATIONS AND CONSTRUCTION DOCUMENTS AND HAS BEEN CONFIRMED BY THE UNIT STRENGTH METHOD OR THE PRISM TEST METHOD PRIOR TO AND DURING CONSTRCTION.	TMS 602-13, 1.4 B	CONTINUOUS	Y
	VERIFY SLUMP FLOW AND VISUAL STABILITY INDEX OF SELF CONSOLIDATING GROUT DELIVERED TO PROJECT SITE IS IN ACCORDANCE WITH THE SPECIFICATION FOR MASONRY STRUCTURES.	TMS 602-13, 1.5 B.1	CONTINUOUS	Y
MORTAR AND GROUT	VERIFY PROPORTIONS OF SITE PREPARED MORTAR AND GROUT. INSPECT CONSTRUCTION OF MORTAR JOINTS. CONFIRM GROUT SPACING AND CONSOLIDATION TECHNIQUES.	TMS 602-13	PERIODIC	Y
REINFORCING	VERIFY GRADE, SIZE, SPACING, PLACEMENT, POSITIONING, AND LAPPING OF REINFORCING INCLUDING JOINT REINFORCEMENT.	TMS 602-13	PERIODIC	Y
MASONRY ANCHORS	VERIRY TYPE, SIZE, AND LOCATION OF ANCHORS INCLUDING OTHER DETAILS OF ANCHORAGE OF MASONRY TO STRUCTURAL MEMBERS, FRAMES, OR OTHER CONSTRUCTION.	TMS 602-13	PERIODIC	Y
POST INSTALLED ANCHORS IN HARDENED MASONRY	VERIFY DIAMETER, LOCATION, EMBEDMENT, AND PROJECTION OF ANCHORS FOR ALL CONDITIONS EXCEPT AS STATED ABOVE.	TMS 602-13	PERIODIC	Y
WEATHER PROTECTION	VERIFY COMPLIANCE WITH HOT AND COLD WEATHER PROVISIONS FOR MASONRY PREPARTION, CONSTRUCTION, AND PROTECTION. VERIFY THAT WALL CAVITIES ARE PROTECTED AGAINST PRECIPITATION.	TMS 602-13	PERIODIC	Y

SPECIAL INSPECTIONS FOR WIND RESISTANCE (IBC 1705.11)

REQUIRED FOR BUILDINGS AND STRUCTURES CONSTRUCTED IN THE FOLLOWING AREAS:
1. IN WIND CATEGORY B, WHERE Vasd = 120 MPH.
2. IN WIND CATEGORY C OR D, WHERE Vasd = 110 MPH.

ITEM	INSPECTION TASK	REFERENCE	FREQUENCY	APPLICABLE
STRUCTURAL WOOD	INSPECT FIELD GLUING OPERATIONS OF MAIN WINDFORCE-RESISTING SYSTEM	IBC 1705.11.1	CONTINUOUS	N
	INSPECT NAILING, BOLTING, ANCHORING, AND OTHER FASTENING OF ELEMENTS OF THE MAIN WINDFORCE-RESISTING SYSTEM, INCLUDING SHEAR WALLS, WOOD DIAPHRAGMS, DRAG STRUTS, BRACES, AND HOLD DOWNS.	IBC 1705.11.1	PERIODIC	N
COLD-FORMED STEEL FRAMING	INSPECT WELDING AND FASTENING OF ELEMENTS OF THE MAIN WINDFORCE-RESISTING SYSTEM, INCLUDING SHEAR WALLS, BRACES, AND HOLD-DOWNS.	IBC 1705.11.1	CONTINUOUS	N
WIND RESISTING COMPONENTS	INSPECT ROOF COVERING, ROOF DECK AND ROOF FRAMING CONNECTIONS	IBC 1705.11.1	PERIODIC	N
	INSPECT EXTERIOR WALL COVERING AND WALL CONNECTIONS TO ROOF AND FLOOR DIAPHRAGMS AND FRAMING.	IBC 1705.11.1	PERIODIC	N

SPECIAL INSPECTIONS FOR SEISMIC RESISTANCE (IBC 1705.12)

ITEM	INSPECTION TASK	REFERENCE	FREQUENCY	APPLICABLE
STRUCTURAL STEEL	FOR SDC B OR HIGHER, INSPECT ELEMENTS OF THE SEISMIC FORCE RESISTING IN ACCORDANCE WITH AISC 341, EXCEPT FOR STRUCTURES IN SDC C OR LESS WITH R = 3.0 OR LESS.	IBC 1705.12.1 AISC 341	PER AISC 341	N
STRUCTURAL WOOD	FOR SDC C OR HIGHER, INSPECT FIELD GLUING OPERATIONS OF SEISMIC FORCE-RESISTING SYSTEM	IBC 1705.12.2	CONTINUOUS	N
	FOR SDC C OR HIGHER, INSPECT NAILING, BOLTING, ANCHORING, AND OTHER FASTENING OF ELEMENTS OF THE MAIN SEISMICFORCE-RESISTING SYSTEM, INCLUDING SHEAR WALLS, WOOD DIAPHRAGMS, DRAG STRUTS, BRACES, AND HOLD DOWNS.	IBC 1705.12.2	PERIODIC	N
COLD-FORMED STEEL FRAMING	FOR SDC C OR HIGHER, INSPECT WELDING AND FASTENING OF ELEMENTS OF THE MAIN WINDFORCE-RESISTING SYSTEM, INCLUDING SHEAR WALLS, BRACES, AND HOLD-DOWNS.	IBC 1705.12.3	PERIODIC	N
ARCHITECTURAL COMPONENTS	FOR SDC D OR HIGHER, INSPECT ERECTION AND FASTENING OF: 1. EXTERIOR CLADDING, INTERIOR AND EXTERIOR NONBEARING WALLS AND INTERIOR AND EXTERIOR VENEER GREATER THAN 30 FEET IN HEIGHT. 2. EXTERIOR CLADDING AND INTERIOR AND EXTERIOR VENEER WEIGHING MORE THAN 5 PSF. 3. INTERIOR NONBEARING WALL WEIGHING MORE THAN 15 PSF.	IBC 1705.12.5	PERIODIC	N
STORAGE RACKS	FOR SDC D OR HIGHER, INSPECT ANCHORAGE OF STORAGE RACKS THAT ARE 8 FT TALL OR GREATER	IBC 1705.12.7	PERIODIC	N

SPECIAL INSPECTIONS NOT COVERED HERE

- SPRAYED FIRE-RESISTANT MATERIALS (IBC 1705.14)
- MASTIC AND INTUMESCENT FIRE-RESISTANT COATINGS (IBC 1705.15)
- EXTERIOR INSULATION AND FINISH SYSTEMS, EFIS (IBC 1705.16)
- FIRE-RESISTANT PENETRATIONS AND JOINTS (IBC 1705.17)
- TESTING FOR SMOKE CONTROL (IBC 1705.18)

DOB APPROVAL STAMPS

PROJECT
GRACE MANOR
3413 W OGDEN AVENUE
CHICAGO, IL 60623

CLIENT
EAST LAKE MANAGEMENT

COLLABORATORS
ML STRUCTURAL
3946 Ecker St. Unit F Plainfield, IL 60587
SITE DESIGN GROUP
888 South Michigan Avenue Suite 1000 Chicago, IL 60605
MEPIS
36 South Wabash Avenue, Chicago, IL 60603
EVA
420 West Huron Street, Chicago, IL 60654

223 WEST OHIO STREET | CHICAGO, ILLINOIS 60654 | +1.312.895.4438 | WWW.JGMA.COM |

NO.	DESCRIPTION	DATE
4	BUILDING PERMIT	12.16.2022
3	HUD REVIEW	11.11.2022
2	90% PERMIT SET	12.17.2021
1	DESIGN DEVELOPMENT	10.15.2021

KEY PLAN

STAMP

STATE OF ILLINOIS
RYAN A. LEZCANO
081-007435
LICENSED PROFESSIONAL STRUCTURAL ENGINEER
EXP: 11.30.24

SHEET TITLE
SPECIAL INSPECTIONS

S0-102
SHEET NUMBER

© JGMA 2021
PROJECT NO.20154

FOOTING SCHEDULE (ALLOWABLE BEARING PRESSURE = 2500 PSF, VERIFY IN FIELD)						
	SIZE			REINFORCING		
MARK	W	L	H	EACH WAY BOTTOM, UNO	EACH WAY TOP, UNO	REMARKS
F5.0	5' - 0"	5' - 0"	1' - 0"	#5@12" OC		
F6.0	6' - 0"	10' - 0"	1' - 6"	#6@12" OC	#5@9" OC	
F6.0A	6' - 0"	12' - 6"	2' - 0"	#6@9" OC	#5@9" OC	
F9.0	9' - 0"	9' - 0"	1' - 6"	#6@12" OC	#5@12" OC	
F10.0	10' - 0"	10' - 0"	1' - 6"	#6@12" OC	#5@12" OC	
F11.0	11' - 0"	11' - 0"	2' - 0"	#6@12" OC	#5@12" OC	
F12.0	12' - 0"	12' - 0"	2' - 0"	#6@9" OC	#6@9" OC	
F12.0A	12' - 0"	13' - 6"	2' - 0"	#6@9" OC	#6@9" OC	

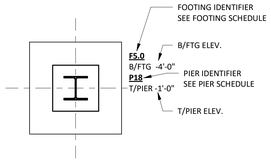

PIER SCHEDULE						
		PIER DIMENSIONS		PIER REINFORCEMENT		
MARK	TYPE	A	B	VERT. BARS	TIES	REMARKS
P18	TYPE A	18"	18"	4 - #6	#3@12" OC	

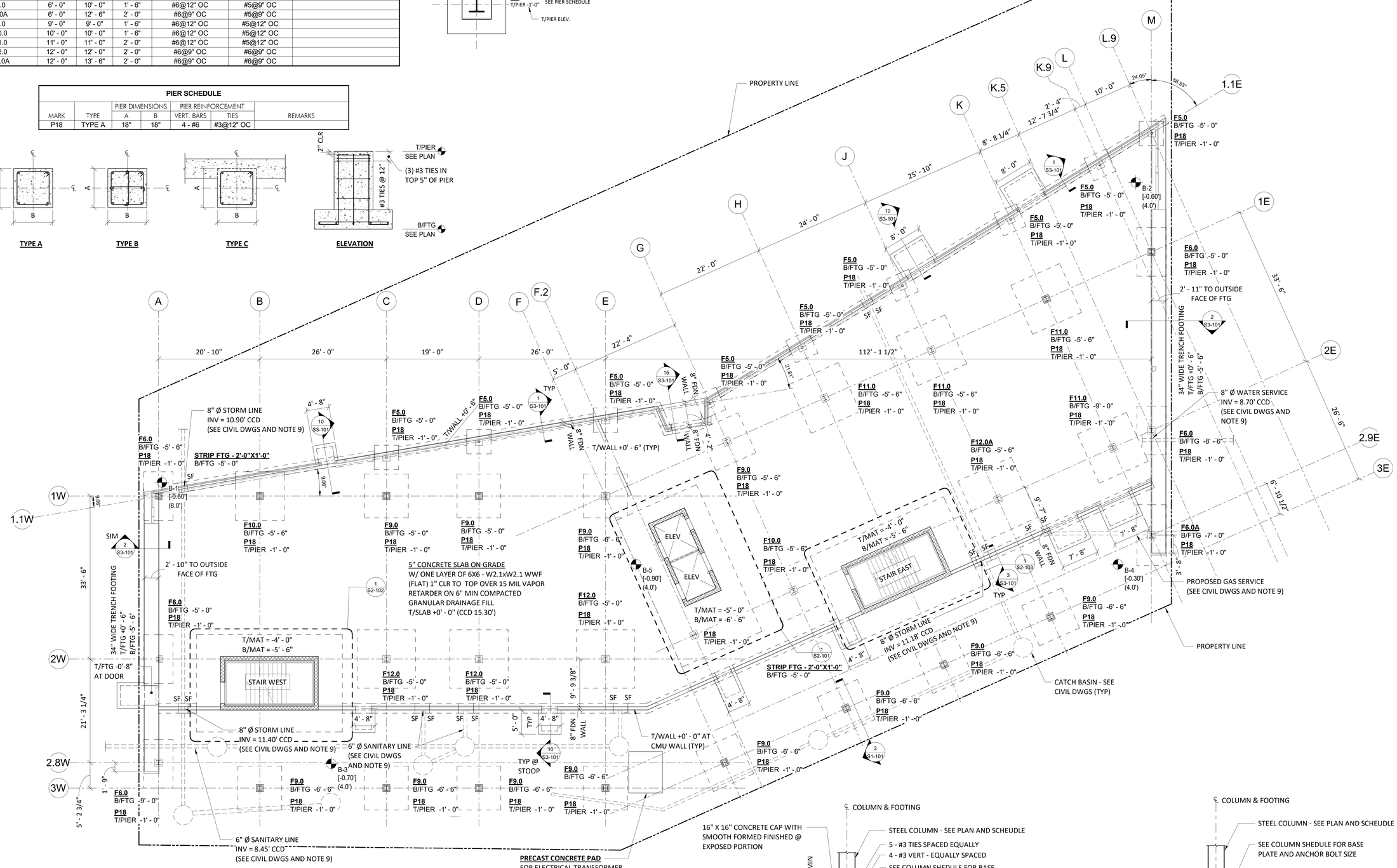

1 FOUNDATION PLAN
1/8" = 1'-0"

FOUNDATION NOTES:

INDICATES APPROXIMATE LOCATION OF SOIL BORING.

2. [X.X'] INDICATES APPROXIMATE LOCATION OF GRADE ABOVE OR BELOW FINISHED FLOOR +0'-0" (CCD +15.30')
3. (X.X') INDICATES EXCAVATION DEPTH BELOW EXISTING GRADE REQUIRED TO ACHEIVE A MINIMUM NET ALLOWABLE BEARING PRESSURE OF 2,500 PSF. THIS VALUE DOES NOT ACCOUNT FOR MINIMUM FROST DEPTH WHICH MAY REQUIRE FURTHER EXCAVATION ALONG EXTERIOR FOUNDATIONS.
4. SEE GEOTECHNICAL REPORT (PROJECT No. 2102888) BY GEI CONSULTANTS FOR MORE INFORMATION ON SITE PREPARATION, EARTHWORK, ENGINEERED FILL, GROUNDWATER CONTROL, AND GENERAL SITE RECOMENDATIONS.
5. CONTRACTOR TO LAYOUT CONTROL JOINTS IN SLAB ON GRADE NO MORE THAN 12' - 6" OC AND IN PANELS WITH LENGTH TO WIDTH RATIOS NOT EXCEEDING 2:1
6. HOLD DOWN FOUNDATION WALLS 8" AT INTERIOR AND EXTERIOR DOORS, TYP, UNO.
7. SEE ARCH, M/E/P DRAWINGS FOR MISCELLANEOUS CONCRETE WORK INCLUDING EQUIPMENT CURBS AND HOUSEKEEPING PADS.
8. SEE ARCH AND M/E/P DRAWINGS FOR LOCATIONS OF SLAB AND WALL PENETRATIONS, SEE TYPICAL STRUCTURAL DETAILS FOR ADDITIONAL REINFORCING REQUIREMENTS.
9. SEE 7,8, AND 9 ON S3-101 FOR UTILITIES RUNNING THROUGH FOUNDATION WALLS OR BELOW FOOTINGS.

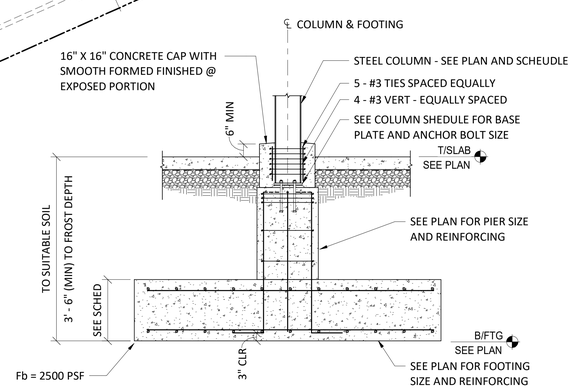

3 COLUMN FOOTING DETAIL AT PARKING LOT
1/2" = 1'-0"

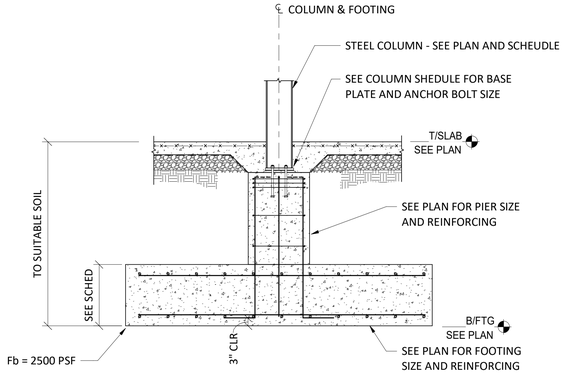

2 TYP COLUMN FOOTING DETAIL
1/2" = 1'-0"

1/8" = 1'-0" 8' 16'

DOB APPROVAL STAMPS

PROJECT
GRACE MANOR
3413 W OGDEN AVENUE
CHICAGO, IL 60623

CLIENT
EAST LAKE MANAGEMENT

COLLABORATORS
ML STRUCTURAL
334 E Colfax St, Unit F Palatine, IL 60067
SITE DESIGN GROUP
888 South Michigan Avenue Suite 1000 Chicago, IL 60605
MEPIS
36 South Wabash Avenue, Chicago, IL 60603
EVA
420 West Huron Street, Chicago, IL 60654

223 WEST OHIO STREET | CHICAGO, ILLINOIS 60654 | +1.312.895.4438 | WWW.JGMA.COM |

NO.	DESCRIPTION	DATE
4	BUILDING PERMIT	12.16.2022
3	HUD REVIEW	11.11.2022
2	90% PERMIT SET	12.17.2021
1	DESIGN DEVELOPMENT	10.15.2021

KEY PLAN

STAMP

STATE OF ILLINOIS
RYAN A. LEZCANO
081-007435
LICENSED STRUCTURAL ENGINEER
EXP: 11.30.24

SHEET TITLE
FOUNDATION PLAN - LEVEL 1

S1-101
SHEET NUMBER

© JGMA 2021

PROJECT NO 20154

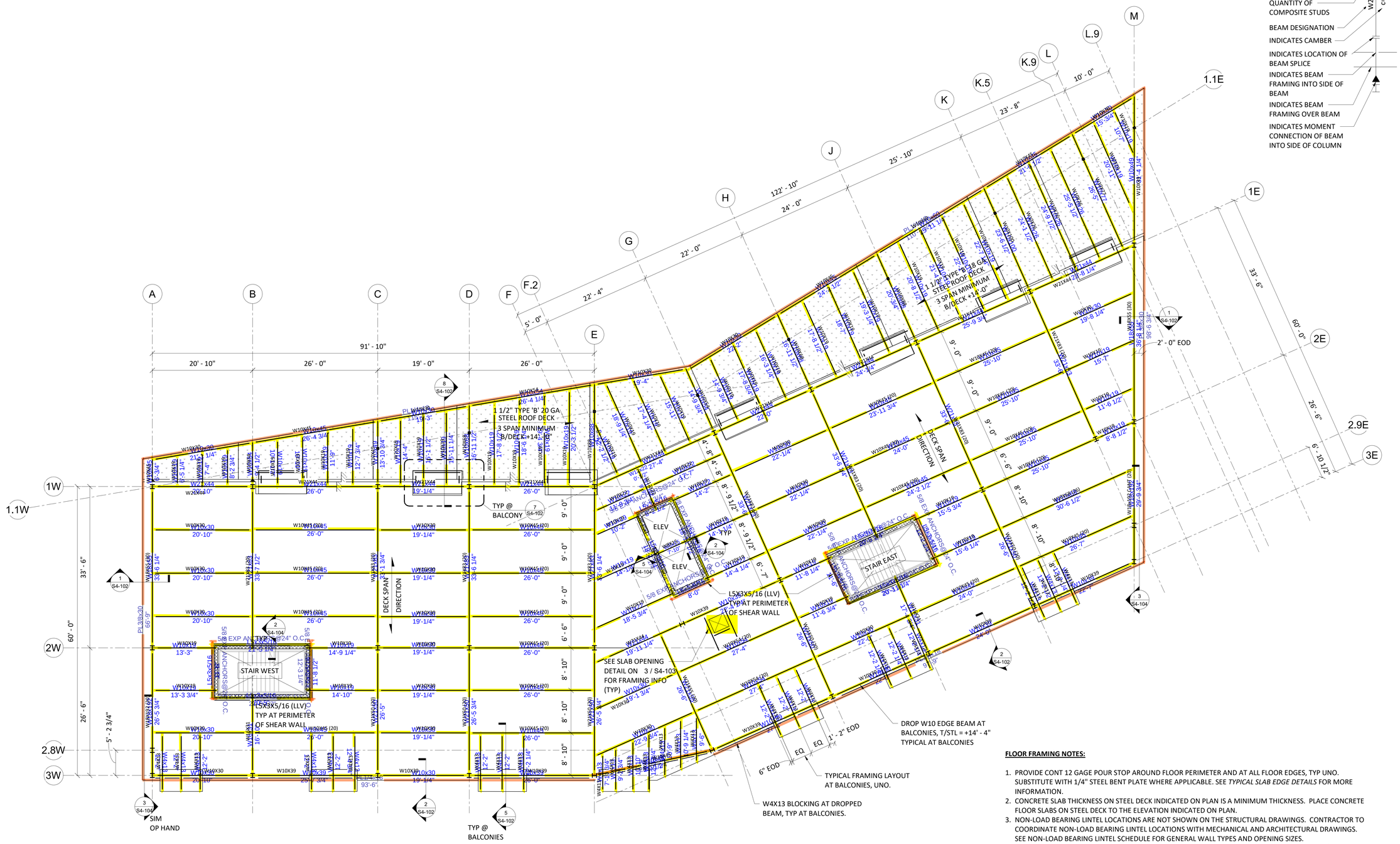

STRUCTURAL STEEL LEGEND:

- INDICATES BEAM FRAMING OVER TUBE COLUMN
- INDICATES BEAM FRAMING OVER WF COLUMN
- INDICATES BEAM FRAMING INTO SIDE OF COLUMN
- INDICATES FACTORED BEAM END REACTION - AXIAL (A = 20k, 30k)
- INDICATES FACTORED BEAM END REACTION - SHEAR
- QUANTITY OF COMPOSITE STUDS
- BEAM DESIGNATION (W21x22 (20))
- INDICATES CAMBER (c=1 1/4")
- INDICATES LOCATION OF BEAM SPLICE
- INDICATES BEAM FRAMING INTO SIDE OF BEAM
- INDICATES BEAM FRAMING OVER BEAM
- INDICATES MOMENT CONNECTION OF BEAM INTO SIDE OF COLUMN

FLOOR CONSTRUCTION:
4" LW CONC SLAB
ON 1 1/2" VLR 19 Ga. COMP STEEL DECK, 3 SPAN MINIMUM, REINF
W/ 6X6 - W2.1XW2.1 WWR
(4" TOTAL THICKNESS MIN) T/SLAB + 15' - 0"
SEE NOTE 2

FLOOR FRAMING NOTES:

1. PROVIDE CONT 12 GAGE POUR STOP AROUND FLOOR PERIMETER AND AT ALL FLOOR EDGES, TYP UNO. SUBSTITUTE WITH 1/4" STEEL BENT PLATE WHERE APPLICABLE. SEE *TYPICAL SLAB EDGE DETAILS* FOR MORE INFORMATION.
2. CONCRETE SLAB THICKNESS ON STEEL DECK INDICATED ON PLAN IS A MINIMUM THICKNESS. PLACE CONCRETE FLOOR SLABS ON STEEL DECK TO THE ELEVATION INDICATED ON PLAN.
3. NON-LOAD BEARING LINTEL LOCATIONS ARE NOT SHOWN ON THE STRUCTURAL DRAWINGS. CONTRACTOR TO COORDINATE NON-LOAD BEARING LINTEL LOCATIONS WITH MECHANICAL AND ARCHITECTURAL DRAWINGS. SEE NON-LOAD BEARING LINTEL SCHEDULE FOR GENERAL WALL TYPES AND OPENING SIZES.
4. ALL STEEL PERMANENTLY EXPOSED TO WEATHER AND ALL LINTELS IN EXTERIOR WALLS SHALL BE HOT DIPPED GALVANIZED, UNO.
5. SEE ARCH AND M/E/P DRAWINGS FOR LOCATIONS FOR FLOOR PENETRATIONS.
6. ALL STEEL FLOOR FRAMING TO RECEIVE SPRAY FIREPROOFING AND SHALL BE LEFT UNPAINTED. REFER TO ARCHITECTURE FOR UL ASSEMBLIES.
7. WP INDICATES BEAM WEB PENETRATION. SEE DETAIL ON S4-104 FOR SPACING REQUIREMENTS.

1 LEVEL 2 FRAMING PLAN
1/8" = 1'-0"

1/8" = 1'-0"

DOB APPROVAL STAMPS

PROJECT
GRACE MANOR
3413 W OGDEN AVENUE
CHICAGO, IL 60623

CLIENT
EAST LAKE MANAGEMENT

COLLABORATORS
MI STRUCTURAL
3141 Ellinwood Ave, Unit F Plainfield, IL 60587

SITE DESIGN GROUP
888 South Michigan Avenue Suite 1000 Chicago, IL 60605

MEPIS
36 South Wabash Avenue, Chicago, IL 60603

EVA
420 West Huron Street, Chicago, IL 60654

223 WEST OHIO STREET | CHICAGO, ILLINOIS 60654 | +1.312.895.4438 | WWW.JGMA.COM |

NO.	DESCRIPTION	DATE
4	BUILDING PERMIT	12.16.2022
3	HUD REVIEW	11.11.2022
2	90% PERMIT SET	12.17.2021
1	DESIGN DEVELOPMENT	10.15.2021

KEY PLAN

STAMP

STATE OF ILLINOIS
RYAN A. LEZCANO
081-007435
LICENSED STRUCTURAL ENGINEER
EXP: 11.30.24

SHEET TITLE
FRAMING PLAN - LEVEL 2

S1-102
SHEET NUMBER

© JGMA 2021
PROJECT NO 20154

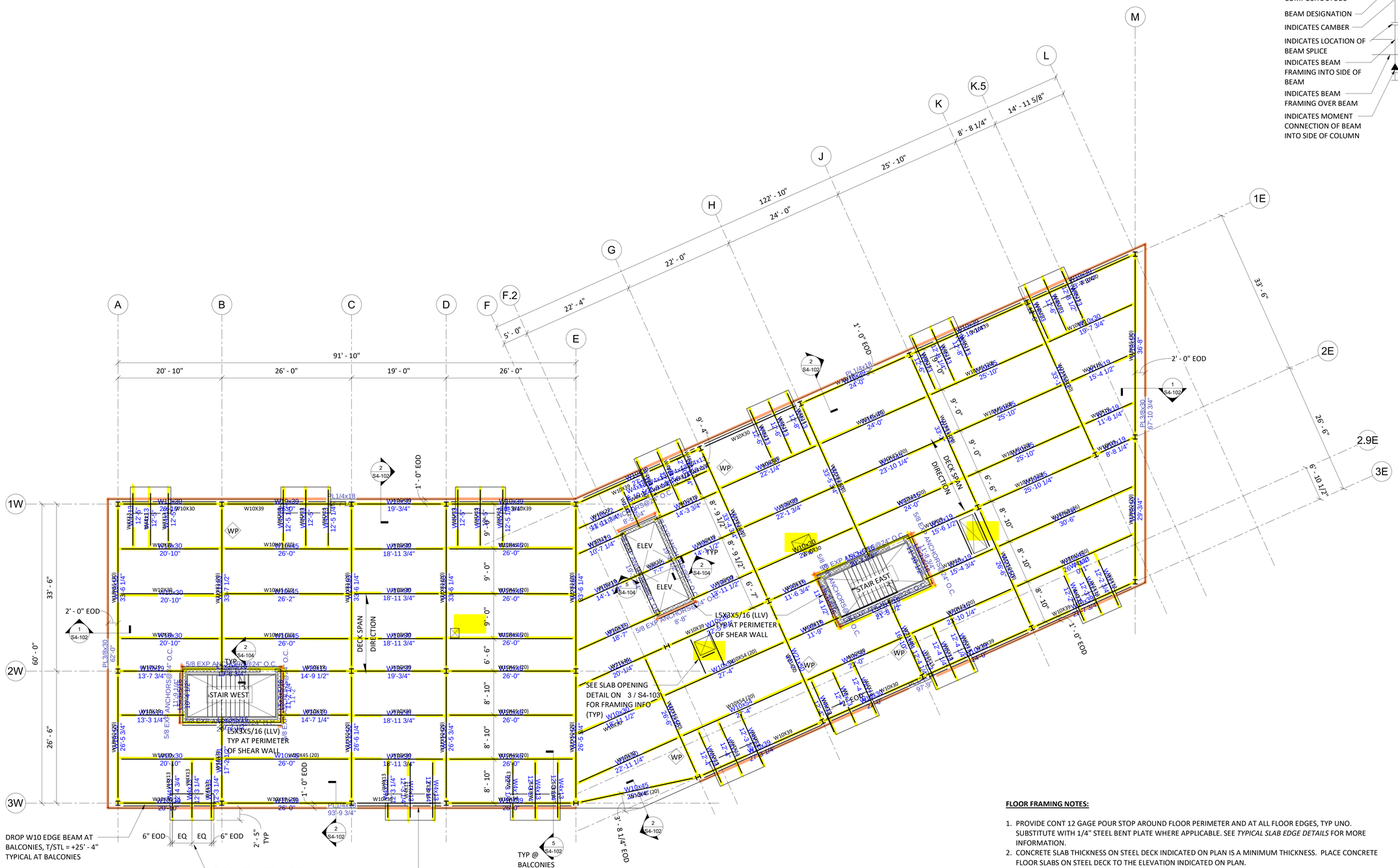

STRUCTURAL STEEL LEGEND:

- INDICATES BEAM FRAMING OVER TUBE COLUMN
- INDICATES BEAM FRAMING OVER WF COLUMN
- INDICATES BEAM FRAMING INTO SIDE OF COLUMN
- INDICATES FACTORED BEAM END REACTION - AXIAL (A = 20k, 30k)
- INDICATES FACTORED BEAM END REACTION - SHEAR
- QUANTITY OF COMPOSITE STUDS (20)
- BEAM DESIGNATION (W21x22)
- INDICATES CAMBER (C=1 1/4")
- INDICATES LOCATION OF BEAM SPLICE
- INDICATES BEAM FRAMING INTO SIDE OF BEAM
- INDICATES BEAM FRAMING OVER BEAM
- INDICATES MOMENT CONNECTION OF BEAM INTO SIDE OF COLUMN

FLOOR CONSTRUCTION:
4" LW CONC SLAB
ON 1 1/2" VLR 19 Ga. COMP STEEL DECK, 3 SPAN MINIMUM, REINF
W/ 6X6 - W2.1XW2.1 WWR
(4" TOTAL THICKNESS MIN) T/SLAB + 26' - 0"
SEE NOTE 2

FLOOR FRAMING NOTES:

1. PROVIDE CONT 12 GAGE POUR STOP AROUND FLOOR PERIMETER AND AT ALL FLOOR EDGES, TYP UNO. SUBSTITUTE WITH 1/4" STEEL BENT PLATE WHERE APPLICABLE. SEE *TYPICAL SLAB EDGE DETAILS* FOR MORE INFORMATION.
2. CONCRETE SLAB THICKNESS ON STEEL DECK INDICATED ON PLAN IS A MINIMUM THICKNESS. PLACE CONCRETE FLOOR SLABS ON STEEL DECK TO THE ELEVATION INDICATED ON PLAN.
3. NON-LOAD BEARING LINTEL LOCATIONS ARE NOT SHOWN ON THE STRUCTURAL DRAWINGS. CONTRACTOR TO COORDINATE NON-LOAD BEARING LINTEL LOCATIONS WITH MECHANICAL AND ARCHITECTURAL DRAWINGS. SEE NON-LOAD BEARING LINTEL SCHEDULE FOR GENERAL WALL TYPES AND OPENING SIZES.
4. ALL STEEL PERMANENTLY EXPOSED TO WEATHER AND ALL LINTELS IN EXTERIOR WALLS SHALL BE HOT DIPPED GALVANIZED, UNO.
5. SEE ARCH AND M/E/P DRAWINGS FOR LOCATIONS FOR FLOOR PENETRATIONS.
6. ALL STEEL FLOOR FRAMING TO RECEIVE SPRAY FIREPROOFING AND SHALL BE LEFT UNPAINTED. REFER TO ARCHITECTURE FOR UL ASSEMBLIES.
7. WP INDICATES BEAM WEB PENETRATION. SEE DETAIL ON S4-104 FOR SPACING REQUIREMENTS.

1 LEVEL 3 FRAMING PLAN
1/8" = 1'-0"

1/16"=1'-0" 16' 32'

DOB APPROVAL STAMPS

PROJECT
GRACE MANOR
3413 W OGDEN AVENUE
CHICAGO, IL 60623

CLIENT
EAST LAKE MANAGEMENT

COLLABORATORS
ML STRUCTURAL
3141 Ecker St. Unit F Plainfield, IL 60587
SITE DESIGN GROUP
888 South Michigan Avenue Suite 1000 Chicago, IL 60605
MEPIS
36 South Wabash Avenue, Chicago, IL 60603
EVA
420 West Huron Street, Chicago, IL 60654

223 WEST OHIO STREET | CHICAGO, ILLINOIS 60654 | +1.312.895.4438 | WWW.JGMA.COM |

NO.	DESCRIPTION	DATE
4	BUILDING PERMIT	12.16.2022
3	HUD REVIEW	11.11.2022
2	90% PERMIT SET	12.17.2021
1	DESIGN DEVELOPMENT	10.15.2021

KEY PLAN

STAMP

STATE OF ILLINOIS
RYAN A. LEZCANO
081-007435
LICENSED STRUCTURAL ENGINEER
EXP: 11.30.24

SHEET TITLE
FRAMING PLAN - LEVEL 3

SHEET NUMBER
S1-103

© JGMA 2021

PROJECT NO 20154

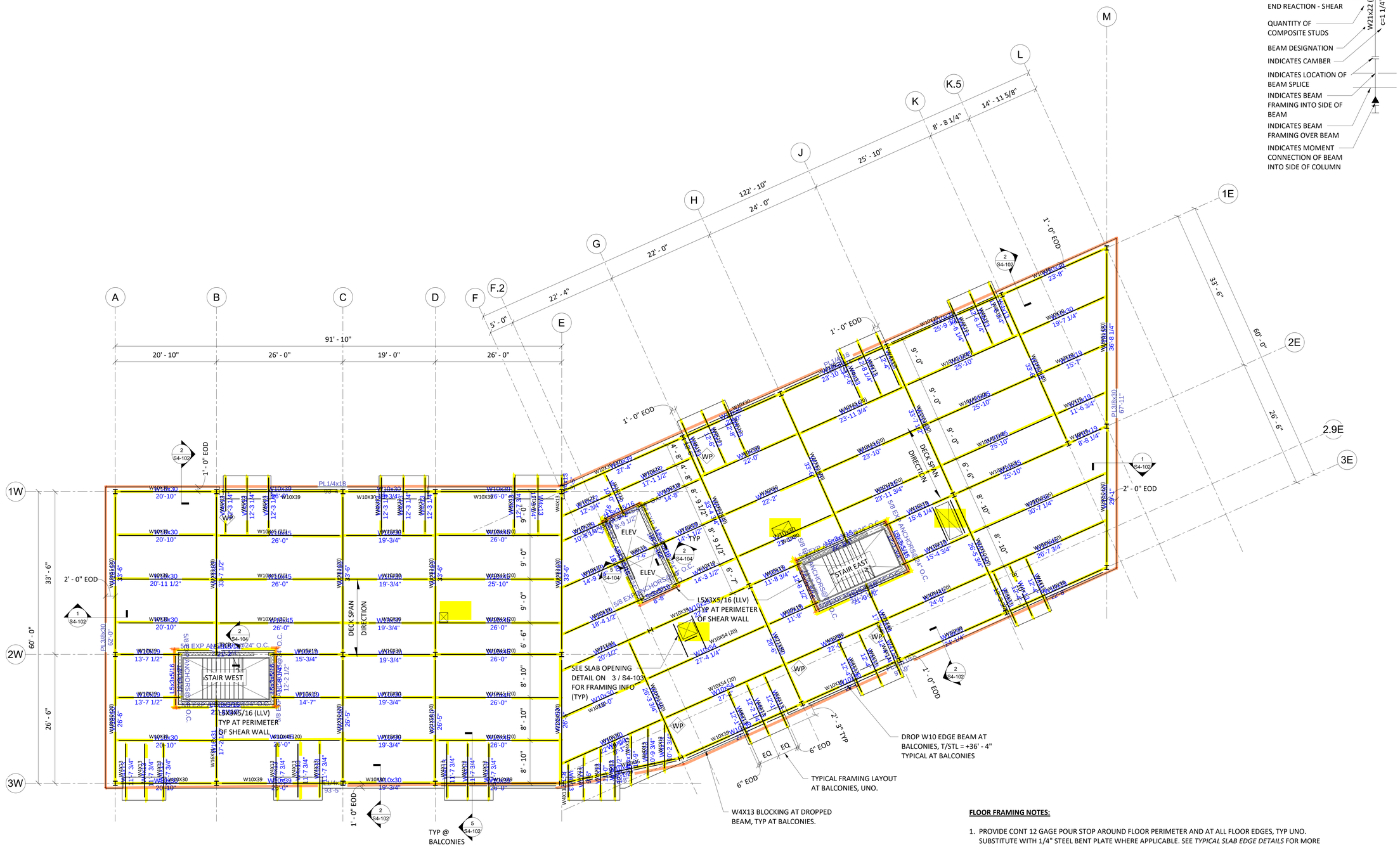

STRUCTURAL STEEL LEGEND:

- INDICATES BEAM FRAMING OVER TUBE COLUMN
- INDICATES BEAM FRAMING OVER WF COLUMN
- INDICATES BEAM FRAMING INTO SIDE OF COLUMN
- INDICATES FACTORED BEAM END REACTION - AXIAL (A = 20k, 30k)
- INDICATES FACTORED BEAM END REACTION - SHEAR
- QUANTITY OF COMPOSITE STUDS (2O)
- BEAM DESIGNATION (W21x22)
- INDICATES CAMBER (c=1 1/4")
- INDICATES LOCATION OF BEAM SPLICE
- INDICATES BEAM FRAMING INTO SIDE OF BEAM
- INDICATES BEAM FRAMING OVER BEAM
- INDICATES MOMENT CONNECTION OF BEAM INTO SIDE OF COLUMN

FLOOR CONSTRUCTION:
4" LW CONC SLAB
ON 1 1/2" VLR 19 Ga. COMP STEEL DECK, 3 SPAN MINIMUM, REINF
W/ 6X6 - W2.1XW2.1 WWR
(4" TOTAL THICKNESS MIN) T/SLAB + 37' - 0"
SEE NOTE 2

FLOOR FRAMING NOTES:

1. PROVIDE CONT 12 GAGE POUR STOP AROUND FLOOR PERIMETER AND AT ALL FLOOR EDGES, TYP UNO. SUBSTITUTE WITH 1/4" STEEL BENT PLATE WHERE APPLICABLE. SEE *TYPICAL SLAB EDGE DETAILS* FOR MORE INFORMATION.
2. CONCRETE SLAB THICKNESS ON STEEL DECK INDICATED ON PLAN IS A MINIMUM THICKNESS. PLACE CONCRETE FLOOR SLABS ON STEEL DECK TO THE ELEVATION INDICATED ON PLAN.
3. NON-LOAD BEARING LINTEL LOCATIONS ARE NOT SHOWN ON THE STRUCTURAL DRAWINGS. CONTRACTOR TO COORDINATE NON-LOAD BEARING LINTEL LOCATIONS WITH MECHANICAL AND ARCHITECTURAL DRAWINGS. SEE NON-LOAD BEARING LINTEL SCHEDULE FOR GENERAL WALL TYPES AND OPENING SIZES.
4. ALL STEEL PERMANENTLY EXPOSED TO WEATHER AND ALL LINTELS IN EXTERIOR WALLS SHALL BE HOT DIPPED GALVANIZED, UNO.
5. SEE ARCH AND M/E/P DRAWINGS FOR LOCATIONS FOR FLOOR PENETRATIONS.
6. ALL STEEL FLOOR FRAMING TO RECEIVE SPRAY FIREPROOFING AND SHALL BE LEFT UNPAINTED. REFER TO ARCHITECTURE FOR UL ASSEMBLIES.
7. (WP) INDICATES BEAM WEB PENETRATION. SEE DETAIL ON S4-104 FOR SPACING REQUIREMENTS.

1 LEVEL 4 FRAMING PLAN
1/8" = 1'-0"

1/8" = 1'-0" 8' 16'

DOB APPROVAL STAMPS

PROJECT
GRACE MANOR
3413 W OGDEN AVENUE
CHICAGO, IL 60623

CLIENT
EAST LAKE MANAGEMENT

COLLABORATORS
ML STRUCTURAL
334 E Colfax St, Unit F Palatine, IL 60067

SITE DESIGN GROUP
888 South Michigan Avenue Suite 1000 Chicago, IL 60605

MEPIS
36 South Wabash Avenue, Chicago, IL 60603

EVA
420 West Huron Street, Chicago, IL 60654

223 WEST OHIO STREET | CHICAGO, ILLINOIS 60654 | +1.312.895.4438 | WWW.JGMA.COM |

NO.	DESCRIPTION	DATE
4	BUILDING PERMIT	12.16.2022
3	HUD REVIEW	11.11.2022
2	90% PERMIT SET	12.17.2021
1	DESIGN DEVELOPMENT	10.15.2021

KEY PLAN

STAMP

STATE OF ILLINOIS
RYAN A. LEZCANO
081-007435
LICENSED STRUCTURAL ENGINEER
EXP: 11.30.24

SHEET TITLE
FRAMING PLAN - LEVEL 4

S1-104
SHEET NUMBER

© JGMA 2021
PROJECT NO 20154

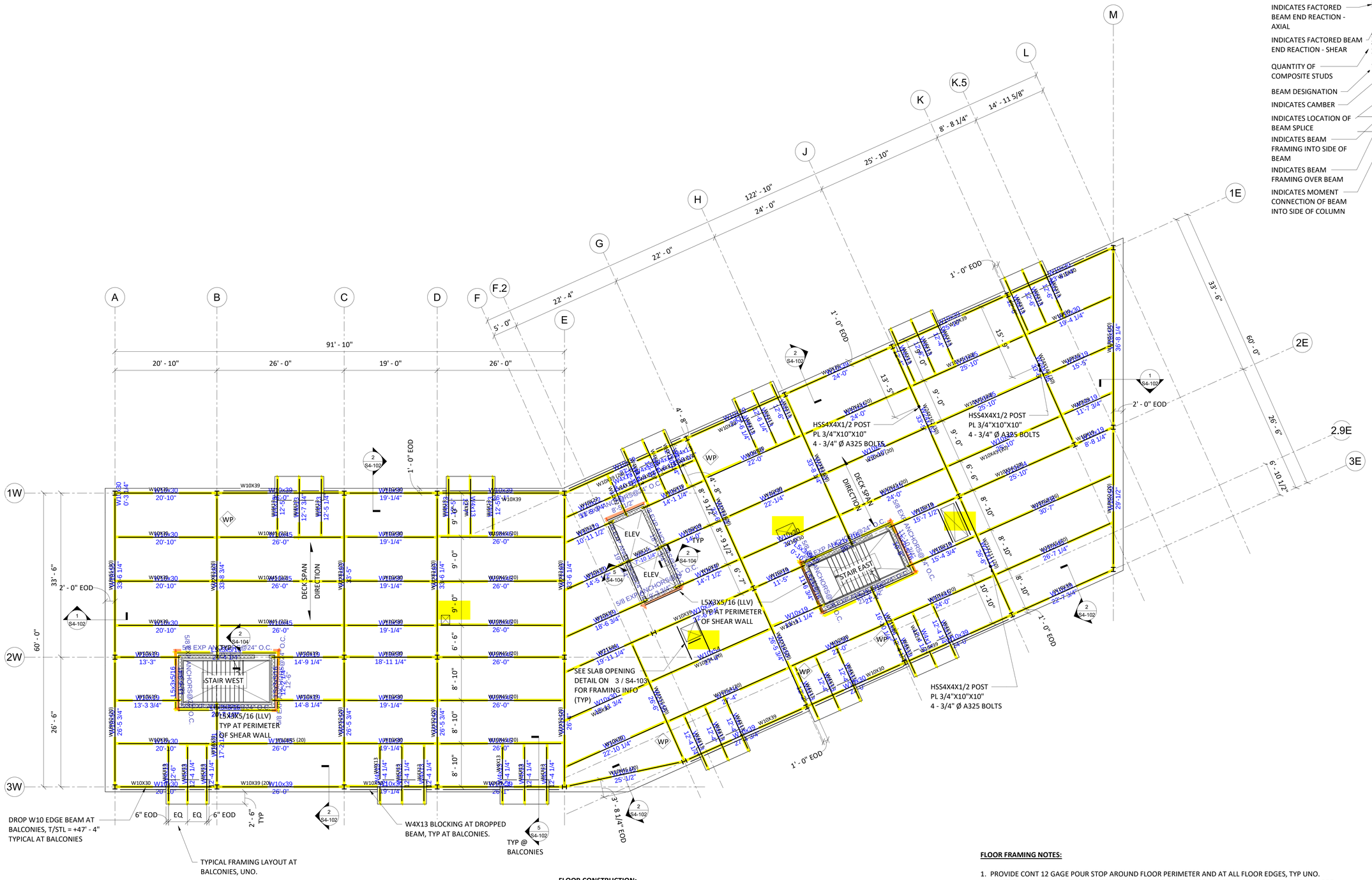

STRUCTURAL STEEL LEGEND:

- INDICATES BEAM FRAMING OVER TUBE COLUMN
- INDICATES BEAM FRAMING OVER WF COLUMN
- INDICATES BEAM FRAMING INTO SIDE OF COLUMN
- INDICATES FACTORED BEAM END REACTION - AXIAL (A = 20k, 30k)
- INDICATES FACTORED BEAM END REACTION - SHEAR
- QUANTITY OF COMPOSITE STUDS
- BEAM DESIGNATION (W21x22 (20))
- INDICATES CAMBER (C=1 1/4")
- INDICATES LOCATION OF BEAM SPLICE
- INDICATES BEAM FRAMING INTO SIDE OF BEAM
- INDICATES BEAM FRAMING OVER BEAM
- INDICATES MOMENT CONNECTION OF BEAM INTO SIDE OF COLUMN

FLOOR CONSTRUCTION:
4" LW CONC SLAB
ON 1 1/2" VLR 19 Ga. COMP STEEL DECK, 3 SPAN MINIMUM, REINF
W/ 6X6 - W2.1XW2.1 WWR
(4" TOTAL THICKNESS MIN) T/SLAB + 48' - 0"
SEE NOTE 2

FLOOR FRAMING NOTES:

1. PROVIDE CONT 12 GAGE POUR STOP AROUND FLOOR PERIMETER AND AT ALL FLOOR EDGES, TYP UNO. SUBSTITUTE WITH 1/4" STEEL BENT PLATE WHERE APPLICABLE. SEE *TYPICAL SLAB EDGE DETAILS* FOR MORE INFORMATION.
2. CONCRETE SLAB THICKNESS ON STEEL DECK INDICATED ON PLAN IS A MINIMUM THICKNESS. PLACE CONCRETE FLOOR SLABS ON STEEL DECK TO THE ELEVATION INDICATED ON PLAN.
3. NON-LOAD BEARING LINTEL LOCATIONS ARE NOT SHOWN ON THE STRUCTURAL DRAWINGS. CONTRACTOR TO COORDINATE NON-LOAD BEARING LINTEL LOCATIONS WITH MECHANICAL AND ARCHITECTURAL DRAWINGS. SEE NON-LOAD BEARING LINTEL SCHEDULE FOR GENERAL WALL TYPES AND OPENING SIZES.
4. ALL STEEL PERMANENTLY EXPOSED TO WEATHER AND ALL LINTELS IN EXTERIOR WALLS SHALL BE HOT DIPPED GALVANIZED, UNO.
5. SEE ARCH AND M/E/P DRAWINGS FOR LOCATIONS FOR FLOOR PENETRATIONS.
6. ALL STEEL FLOOR FRAMING TO RECEIVE SPRAY FIREPROOFING AND SHALL BE LEFT UNPAINTED. REFER TO ARCHITECTURE FOR UL ASSEMBLIES.
7. WP INDICATES BEAM WEB PENETRATION. SEE DETAIL ON S4-104 FOR SPACING REQUIREMENTS.

1 *LEVEL 5 FRAMING PLAN*
1/8" = 1'-0"

1/8" = 1'-0" 8' 16'

DOB APPROVAL STAMPS

PROJECT
GRACE MANOR
3413 W OGDEN AVENUE
CHICAGO, IL 60623

CLIENT
EAST LAKE MANAGEMENT

COLLABORATORS
MI STRUCTURAL
3141 Ceder St. | 141 E Palatine, IL 60067

SITE DESIGN GROUP
888 South Michigan Avenue Suite 1000 Chicago, IL 60605

MEPIS
36 South Wabash Avenue, Chicago, IL 60603

EVA
420 West Huron Street, Chicago, IL 60654

NO.	DESCRIPTION	DATE
4	BUILDING PERMIT	12.16.2022
3	HUD REVIEW	11.11.2022
2	90% PERMIT SET	12.17.2021
1	DESIGN DEVELOPMENT	10.15.2021

KEY PLAN

STAMP

STATE OF ILLINOIS
RYAN A. LEZCANO
081-007435
LICENSED STRUCTURAL ENGINEER
EXP: 11.30.24

SHEET TITLE
FRAMING PLAN - LEVEL 5

S1-105
SHEET NUMBER

© JGMA 2021
PROJECT NO 20154

223 WEST OHIO STREET | CHICAGO, ILLINOIS 60654 | +1.312.895.4438 | WWW.JGMA.COM |

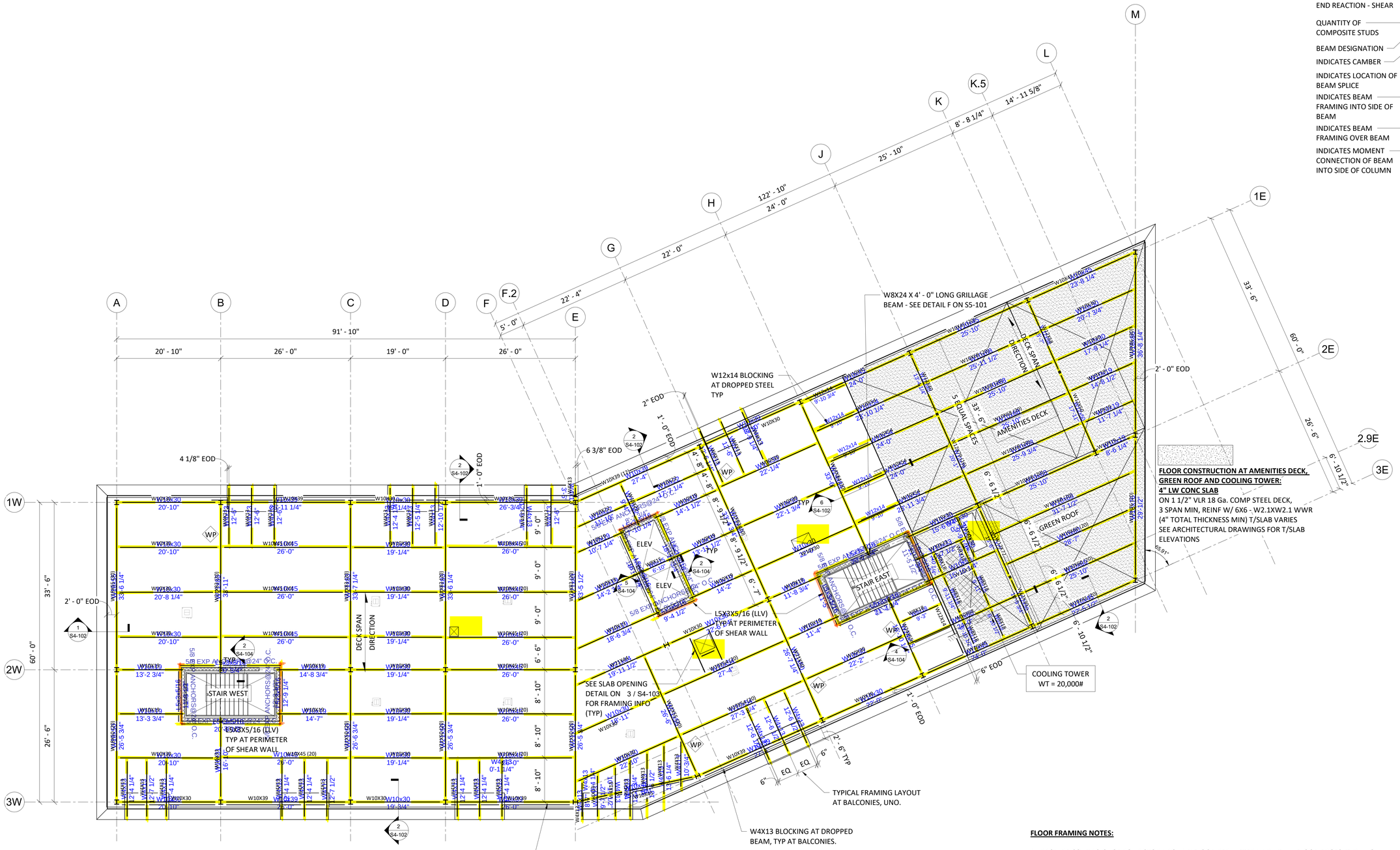

STRUCTURAL STEEL LEGEND:

- INDICATES BEAM FRAMING OVER TUBE COLUMN
- INDICATES BEAM FRAMING OVER WF COLUMN
- INDICATES BEAM FRAMING INTO SIDE OF COLUMN
- INDICATES FACTORED BEAM END REACTION - AXIAL (A = 20k)
- INDICATES FACTORED BEAM END REACTION - SHEAR (30k)
- QUANTITY OF COMPOSITE STUDS (20)
- BEAM DESIGNATION (W21x22)
- INDICATES CAMBER (c=1 1/4")
- INDICATES LOCATION OF BEAM SPLICE
- INDICATES BEAM FRAMING INTO SIDE OF BEAM
- INDICATES BEAM FRAMING OVER BEAM
- INDICATES MOMENT CONNECTION OF BEAM INTO SIDE OF COLUMN

FLOOR FRAMING NOTES:

1. PROVIDE CONT 12 GAGE POUR STOP AROUND FLOOR PERIMETER AND AT ALL FLOOR EDGES, TYP UNO. SUBSTITUTE WITH 1/4" STEEL BENT PLATE WHERE APPLICABLE. SEE *TYPICAL SLAB EDGE DETAILS* FOR MORE INFORMATION.
2. CONCRETE SLAB THICKNESS ON STEEL DECK INDICATED ON PLAN IS A MINIMUM THICKNESS. PLACE CONCRETE FLOOR SLABS ON STEEL DECK TO THE ELEVATION INDICATED ON PLAN.
3. NON-LOAD BEARING LINTEL LOCATIONS ARE NOT SHOWN ON THE STRUCTURAL DRAWINGS. CONTRACTOR TO COORDINATE NON-LOAD BEARING LINTEL LOCATIONS WITH MECHANICAL AND ARCHITECTURAL DRAWINGS. SEE NON-LOAD BEARING LINTEL SCHEDULE FOR GENERAL WALL TYPES AND OPENING SIZES.
4. ALL STEEL PERMANENTLY EXPOSED TO WEATHER AND ALL LINTELS IN EXTERIOR WALLS SHALL BE HOT DIPPED GALVANIZED, UNO.
5. SEE ARCH AND M/E/P DRAWINGS FOR LOCATIONS FOR FLOOR PENETRATIONS.
6. ALL STEEL FLOOR FRAMING TO RECEIVE SPRAY FIREPROOFING AND SHALL BE LEFT UNPAINTED. REFER TO ARCHITECTURE FOR UL ASSEMBLIES.
7. (WP) INDICATES BEAM WEB PENETRATION. SEE DETAIL ON S4-104 FOR SPACING REQUIREMENTS.

1 *LEVEL 6 FRAMING PLAN*
1/8" = 1'-0"

DOB APPROVAL STAMPS

PROJECT
GRACE MANOR
3413 W OGDEN AVENUE
CHICAGO, IL 60623

CLIENT
EAST LAKE MANAGEMENT

COLLABORATORS
MI STRUCTURAL
3141 E Cotton, St. Unit F Palatine, IL 60067
SITE DESIGN GROUP
888 South Michigan Avenue Suite 1000 Chicago, IL 60605
MEPIS
36 South Wabash Avenue, Chicago, IL 60603
EVA
420 West Huron Street, Chicago, IL 60654

NO.	DESCRIPTION	DATE
4	BUILDING PERMIT	12.16.2022
3	HUD REVIEW	11.11.2022
2	90% PERMIT SET	12.17.2021
1	DESIGN DEVELOPMENT	10.15.2021

KEY PLAN

STAMP

STATE OF ILLINOIS
RYAN A. LEZCANO
081-007435
LICENSED PROFESSIONAL STRUCTURAL ENGINEER
EXP: 11.30.24

SHEET TITLE
FRAMING PLAN - LEVEL 6

S1-106
SHEET NUMBER

© JGMA 2021
PROJECT NO:20154

223 WEST OHIO STREET | CHICAGO, ILLINOIS 60654 | +1.312.895.4438 | WWW.JGMA.COM |

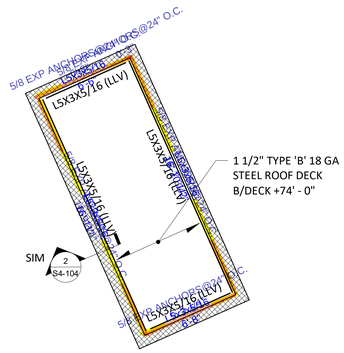

2 ELEVATOR CORE ROOF FRAMING PLAN
1/4" = 1'-0"

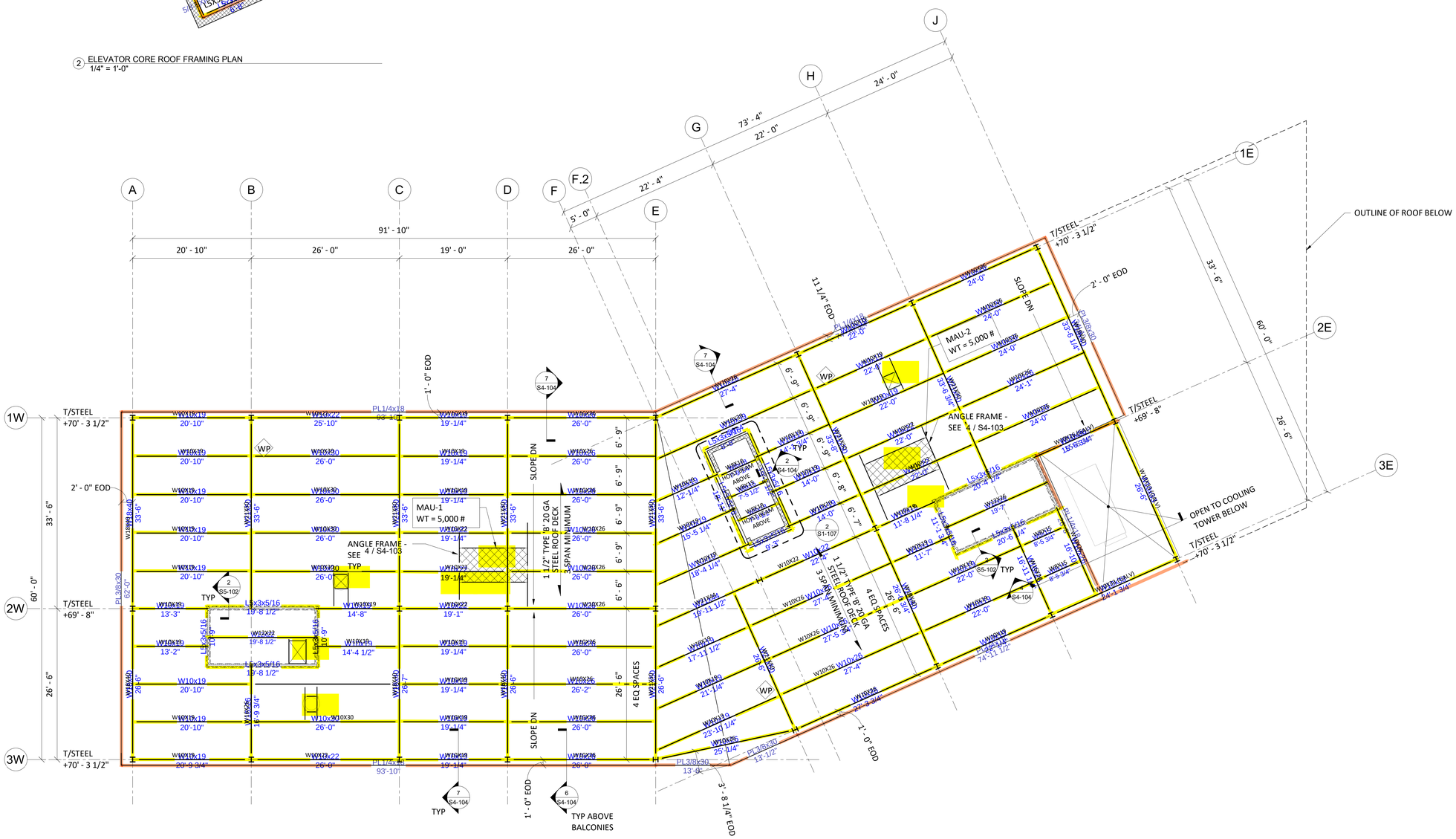

ROOF FRAMING NOTES:

1. PROVIDE CONT 1/4" STEEL BENT PLATE AROUND ROOF PERIMETER, TYP UNO. SUBSTITUTE WITH L3x3x1/4 WHERE APPLICABLE.
2. ALL STEEL PERMENTLY EXPOSED TO WEATHER AND ALL LINTELS IN EXTERIOR WALLS SHALL BE HOT DIPPED GALVANIZED, UNO.
3. SEE ARCH AND M/E/P DRAWINGS FOR LOCATIONS OF ROOF PENETRATIONS. PROVIDE L5x3x5/16 LLV ANGLES TO SUPPORT EQUIPMENT CURBS AROUND PERIMETER OF MECHANICAL UNITS AND TO FRAME OUT ROOF OPENINGS. SEE *TYPICAL ROOF OPENING SUPPORT DETAIL AT NEW OR EXISTING ROOF JOISTS* AND GENERAL NOTES FOR ADDITIONAL REINFORCING REQUIREMENTS AT MECHANICAL UNITS AND ROOF PENETRATIONS.
4. WP INDICATES BEAM WEB PENETRATION. SEE DETAIL ON S4-104 FOR SPACING REQUIREMENTS.

1 *ROOF FRAMING PLAN*
1/8" = 1'-0"

1/8" = 1'-0" 8' 16'

DOB APPROVAL STAMPS

PROJECT
GRACE MANOR
3413 W OGDEN AVENUE
CHICAGO, IL 60623

CLIENT
EAST LAKE MANAGEMENT

COLLABORATORS
ML STRUCTURAL
3141 S Clinton St | Unit F Palatine, IL 60067
SITE DESIGN GROUP
888 South Michigan Avenue Suite 1000 Chicago, IL 60605
MEPIS
36 South Wabash Avenue, Chicago, IL 60603
EVA
420 West Huron Street, Chicago, IL 60654

223 WEST OHIO STREET | CHICAGO, ILLINOIS 60654 | +1.312.895.4438 | WWW.JGMA.COM |

NO.	DESCRIPTION	DATE
4	BUILDING PERMIT	12.16.2022
3	HUD REVIEW	11.11.2022
2	90% PERMIT SET	12.17.2021
1	DESIGN DEVELOPMENT	10.15.2021

KEY PLAN

STAMP

STATE OF ILLINOIS
RYAN A. LEZCANO
081-007435
LICENSED PROFESSIONAL ENGINEER
EXP: 11.30.24

SHEET TITLE

FRAMING PLAN - ROOF LEVEL

S1-107
SHEET NUMBER

© JGMA 2021
PROJECT NO:20154

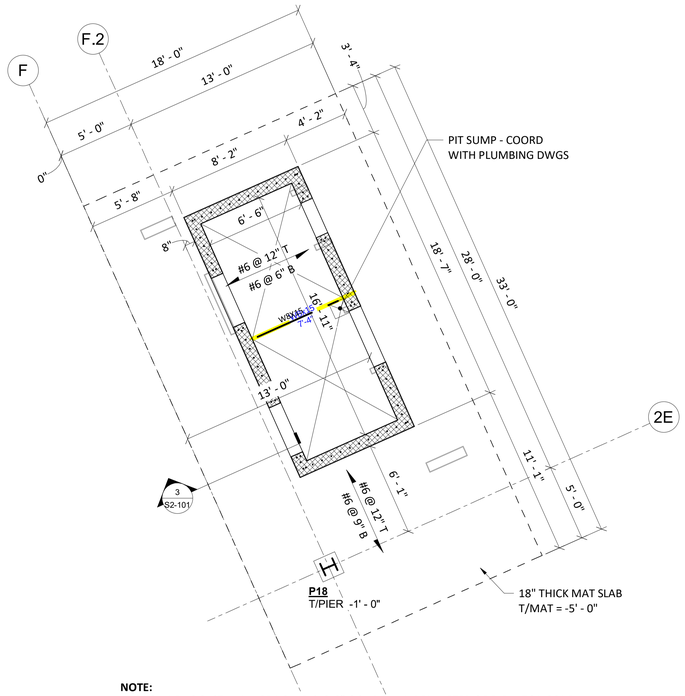

NOTE:

1. PROVIDE #6 CAST IN PLACE DOWELS @ 8" OC AROUND PERIMETER OF ELEVATOR CORE, PROVIDE 2 - #6 BARS AT EA CORNER AND AT THE JAMBS OF THE WALL OPENING.

1 *ELEVATOR CORE FOUNDATION PLAN*
1/4" = 1'-0"

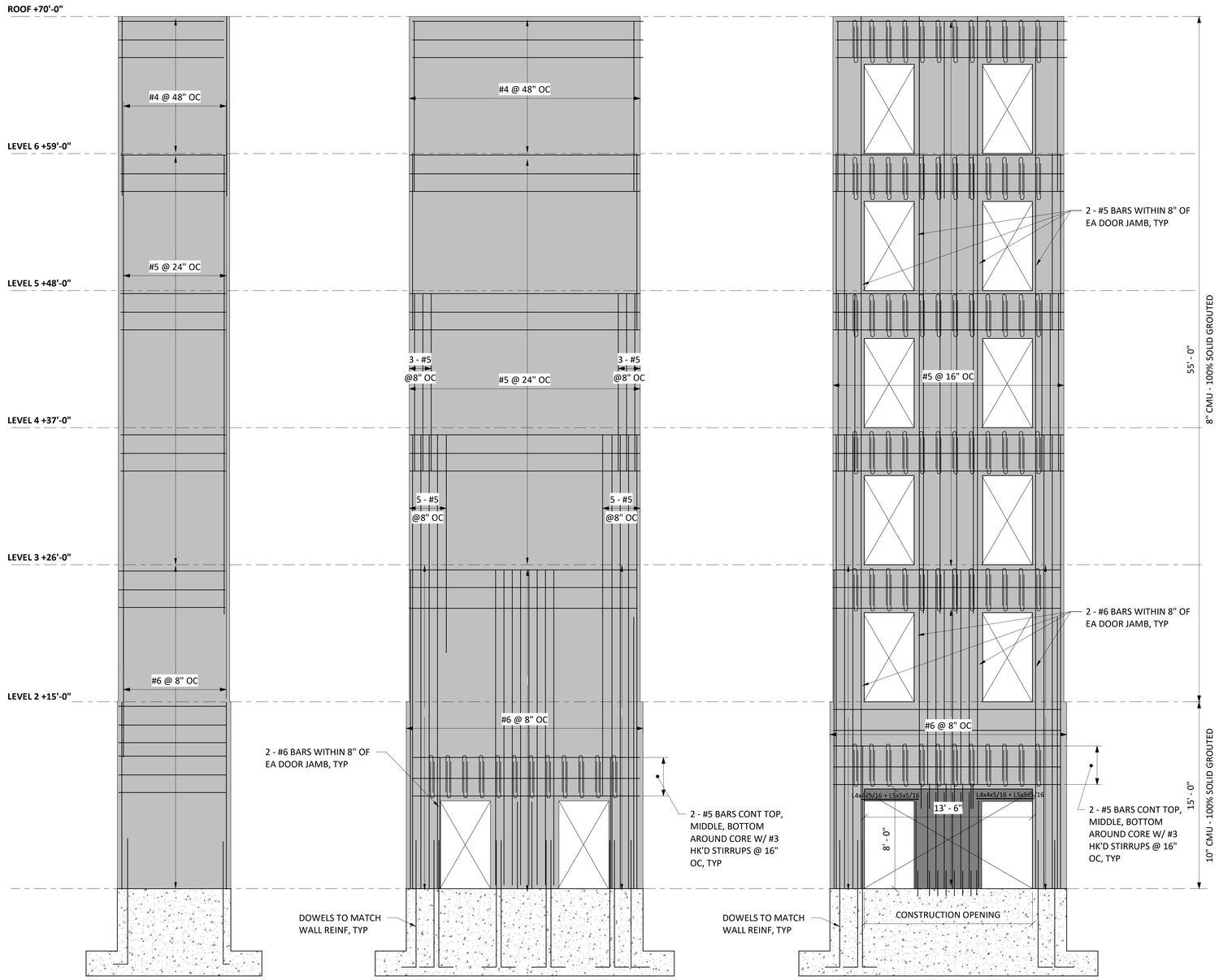

NOTES:

1. PROVIDE CONTINUOUS #4 HORIZONTAL BOND BEAMS @ 48" OC MIN IN ADDITIONS TO STD HORIZONTAL LADDER REINFORCEMENT @ 16" OC.

2 *ELEVATOR CORE - SHEAR WALL ELEVATIONS*
1/4" = 1'-0"

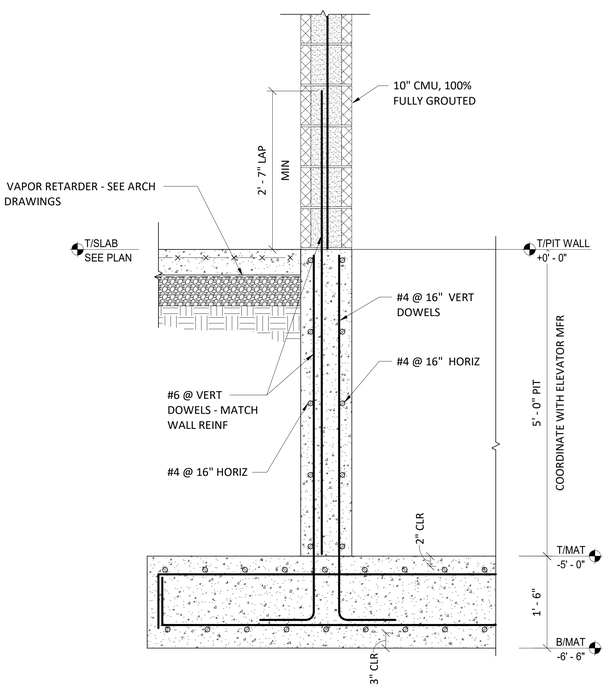

3 *ELEVATOR FOUNDATION SECTION*
1" = 1'-0"

DOB APPROVAL STAMPS

PROJECT
GRACE MANOR
3413 W OGDEN AVENUE
CHICAGO, IL 60623

CLIENT
EAST LAKE MANAGEMENT

COLLABORATORS
ML STRUCTURAL
3141 E Cedar St | Unit D Palatine, IL 60067
SITE DESIGN GROUP
888 South Michigan Avenue Suite 1000 Chicago, IL 60605
MEPIS
36 South Wabash Avenue, Chicago, IL 60603
EVA
420 West Huron Street, Chicago, IL 60654

223 WEST OHIO STREET | CHICAGO, ILLINOIS 60654 | +1.312.895.4438 | WWW.JGMA.COM |

NO.	DESCRIPTION	DATE
4	BUILDING PERMIT	12.16.2022
3	HUD REVIEW	11.11.2022
2	90% PERMIT SET	12.17.2021
1	DESIGN DEVELOPMENT	10.15.2021

KEY PLAN

STAMP

STATE OF ILLINOIS
RYAN A. LEZCANO
081-007435
LICENSED PROFESSIONAL STRUCTURAL ENGINEER
EXP: 11.30.24

SHEET TITLE

SHEAR WALL ELEVATIONS AND DETAILS

S2-101

SHEET NUMBER

© JGMA 2021

PROJECT NO.20154

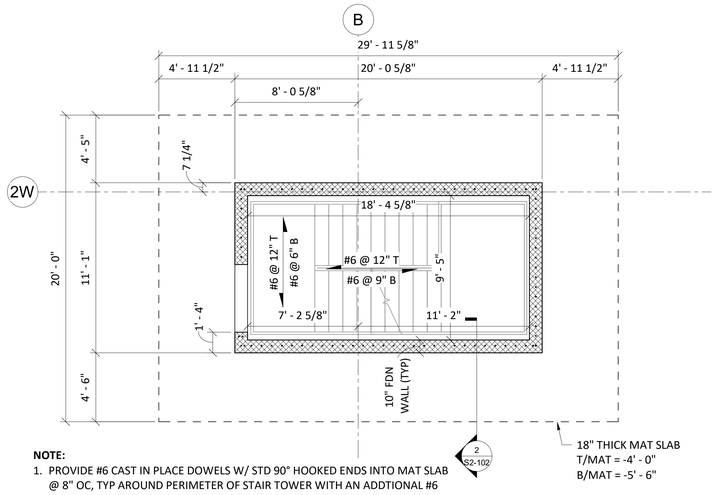

NOTE:

1. PROVIDE #6 CAST IN PLACE DOWELS W/ STD 90° HOOKED ENDS INTO MAT SLAB @ 8" OC, TYP AROUND PERIMETER OF STAIR TOWER WITH AN ADDTIONAL #6 BAR @ 8" OC WITHIN 2' - 0" OF EA CORNER AND AT EA JAMB.

1 *STAIR WEST - FOUNDATION PLAN*
1/4" = 1'-0"

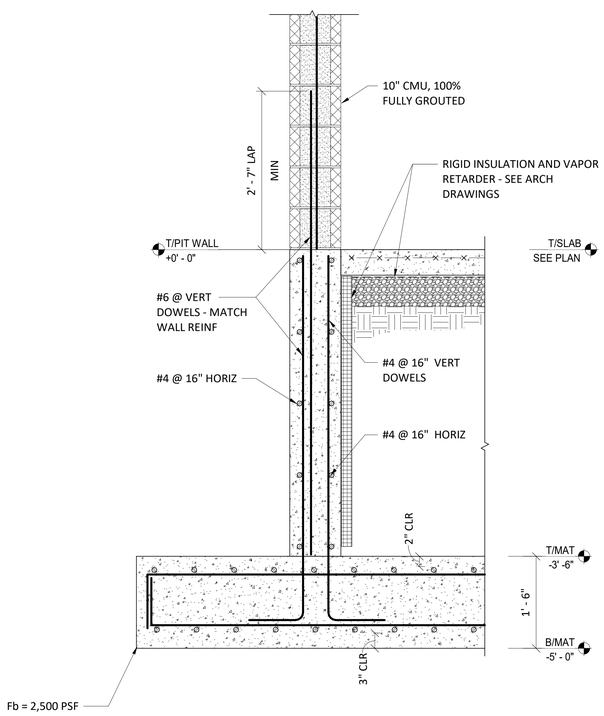

2 *STAIR WEST FOUNDATION SECTION*
1" = 1'-0"

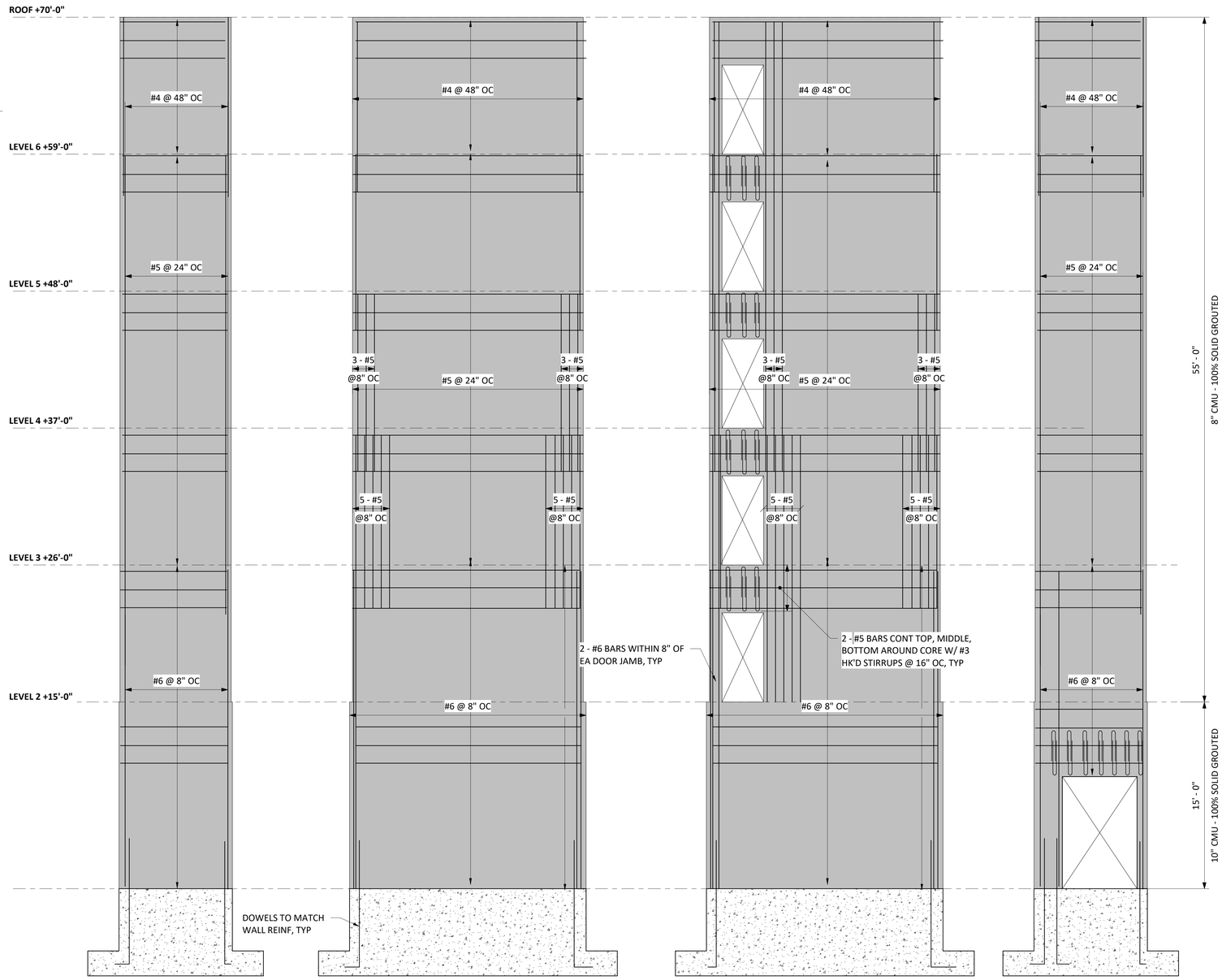

NOTES:

1. PROVIDE CONTINUOUS #4 HORIZONTAL BOND BEAMS @ 48" OC MIN IN ADDITIONS TO STD HORIZONTAL LADDER REINFORCEMENT @ 16" OC.

3 *STAIR WEST - SHEAR WALL ELEVATIONS*
1/8" = 1'-0"

DOB APPROVAL STAMPS

PROJECT
GRACE MANOR
3413 W OGDEN AVENUE
CHICAGO, IL 60623

CLIENT
EAST LAKE MANAGEMENT

COLLABORATORS
ML STRUCTURAL
3946 Carlton St. Unit F Plainfield, IL 60587
SITE DESIGN GROUP
888 South Michigan Avenue Suite 1000 Chicago, IL 60605
MEPIS
36 South Wabash Avenue, Chicago, IL 60603
EVA
420 West Huron Street, Chicago, IL 60654

NO.	DESCRIPTION	DATE
4	BUILDING PERMIT	12.16.2022
3	HUD REVIEW	11.11.2022
2	90% PERMIT SET	12.17.2021
1	DESIGN DEVELOPMENT	10.15.2021

KEY PLAN

STAMP

STATE OF ILLINOIS
RYAN A. LEZCANO
081-007435
LICENSED PROFESSIONAL ENGINEER
CHICAGO, ILLINOIS
STRUCTURAL ENGINEER
EXP: 11.30.24

SHEET TITLE

SHEAR WALL ELEVATIONS AND DETAILS

S2-102

SHEET NUMBER

© JGMA 2021

PROJECT NO 20154

223 WEST OHIO STREET | CHICAGO, ILLINOIS 60654 | +1.312.895.4438 | WWW.JGMA.COM |

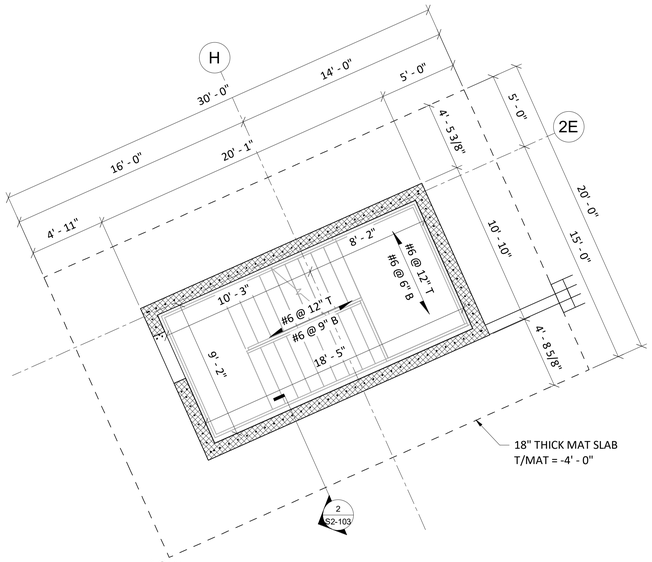

NOTE:

1. PROVIDE #6 CAST IN PLACE DOWELS W/ STD 90° HOOKED ENDS INTO MAT SLAB @ 8" OC, TYP AROUND PERIMETER OF STAIR TOWER WITH AN ADDTIONAL #6 BAR @ 8" OC WITHIN 2' - 0" OF EA CORNER AND AT EA JAMB.

1 *STAIR EAST - FOUNDATION PLAN*
1/4" = 1'-0"

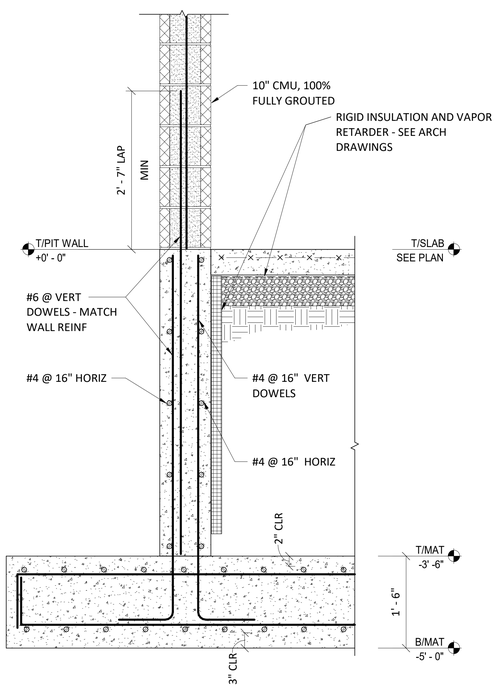

2 *STAIR EAST FOUNDATION SECTION*
1" = 1'-0"

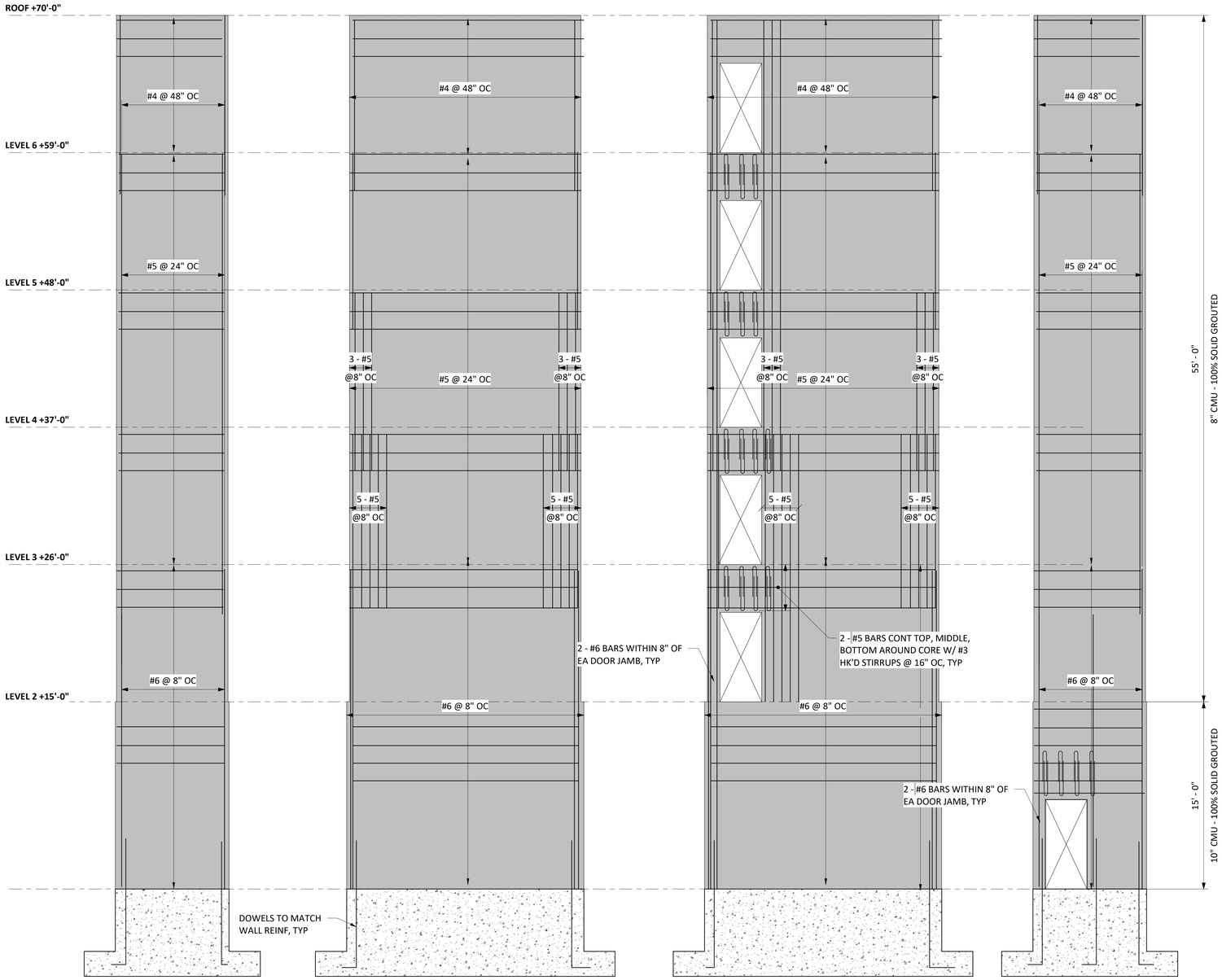

NOTES:

1. PROVIDE CONTINUOUS #4 HORIZONTAL BOND BEAMS @ 48" OC MIN IN ADDITIONS TO STD HORIZONTAL LADDER REINFORCEMENT @ 16" OC.

3 *STAIR EAST - SHEAR WALL ELEVATIONS*
1/4" = 1'-0"

DOB APPROVAL STAMPS

PROJECT
GRACE MANOR
3413 W OGDEN AVENUE
CHICAGO, IL 60623

CLIENT
EAST LAKE MANAGEMENT

COLLABORATORS
ML STRUCTURAL
3141 E Cullerton St | 141 E Palatine, IL 60067
SITE DESIGN GROUP
888 South Michigan Avenue Suite 1000 Chicago, IL 60605
MEPIS
36 South Wabash Avenue, Chicago, IL 60603
EVA
420 West Huron Street, Chicago, IL 60654

NO.	DESCRIPTION	DATE
4	BUILDING PERMIT	12.16.2022
3	HUD REVIEW	11.11.2022
2	90% PERMIT SET	12.17.2021
1	DESIGN DEVELOPMENT	10.15.2021

KEY PLAN

STAMP

SHEET TITLE

SHEAR WALL ELEVATIONS AND DETAILS

S2-103

SHEET NUMBER

© JGMA 2021

PROJECT NO 20154

223 WEST OHIO STREET | CHICAGO, ILLINOIS 60654 | +1.312.895.4438 | WWW.JGMA.COM |

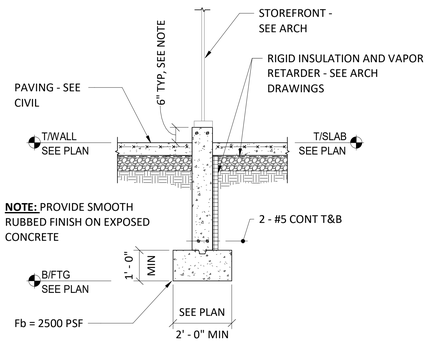

1 TYP EXTERIOR FDN WALL DETAIL
1/2" = 1'-0"

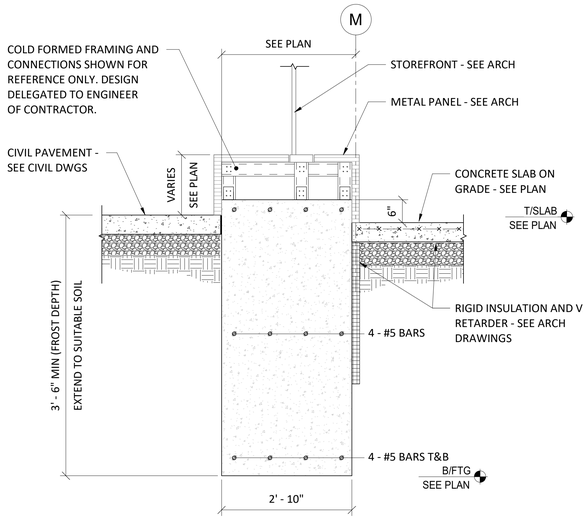

2 SECTION AT TRENCH FOOTING
3/4" = 1'-0"

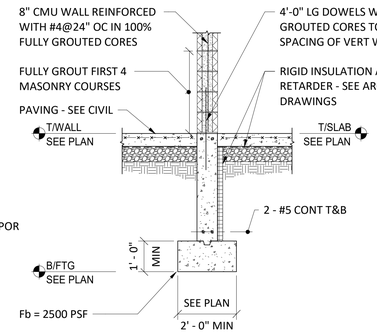

3 TYP EXTERIOR FDN WALL DETAIL @ EXTERIOR CMU WALL
1/2" = 1'-0"

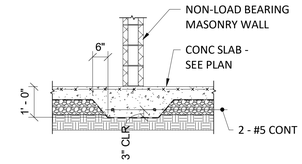

NOTE:
THIS DETAIL ONLY APPLIES TO WALLS 8" OR GREATER IN NOMINAL THICKNESS AND 6'-0" TALL OR GREATER. SEE ARCHITECHTURAL DRAWINGS FOR WALL LOCATIONS AND ELEVATIONS

4 THICKENED SLAB DETAIL
1/2" = 1'-0"

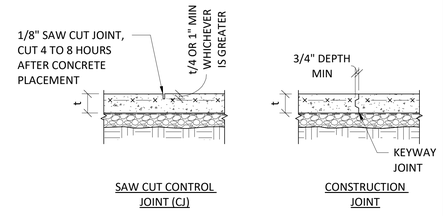

NOTE:
1. DISCONTINUE REINF AT JOINTS
2. SEE PLAN FOR SLAB THICKNESS, "t"

5 SLAB JOINTS
3/4" = 1'-0"

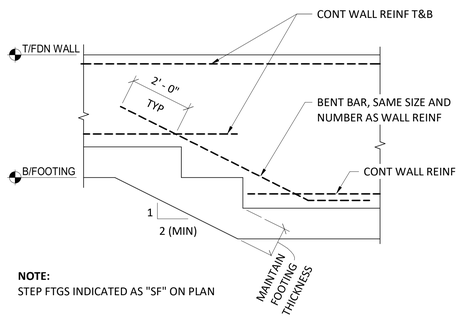

NOTE:
STEP FTGS INDICATED AS "SF" ON PLAN

6 TYP STEP FOOTING DETAIL
1/2" = 1'-0"

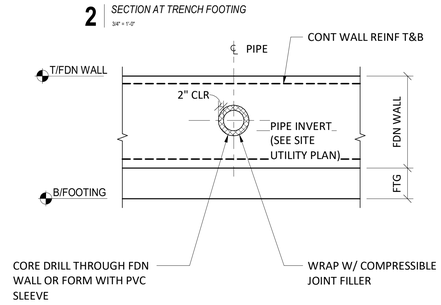

7 DETAIL AT UTILITIES RUNNING THROUGH FDN WALL
1/2" = 1'-0"

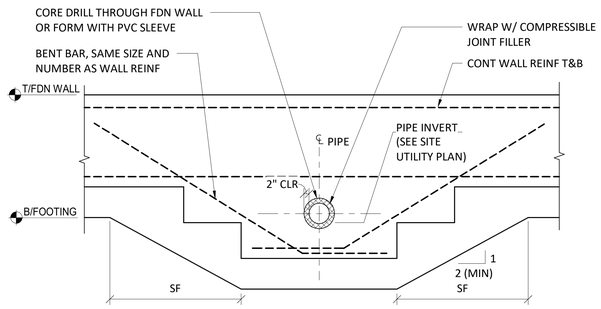

NOTE:
DROP AND STEP FTG AS REQ'D FOR UTILITIES RUNNING THROUGH THE FOOTING OR WITHIN 2'-0" OF THE BOTTOM OF THE FOOTING

8 DETAIL AT UTILITIES RUNNING THROUGH OR BELOW FOOTING
1/2" = 1'-0"

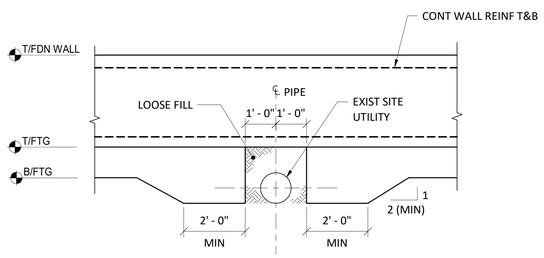

NOTE:
DROP AND STEP FTG AS REQ'D FOR EXISTING SITE UTILITIES RUNNING THROUGH THE FOOTING OR WITHIN 2'-0" OF THE BOTTOM OF THE FOOTING

9 DETAIL AT EXISTING UTILITY RUNNIG THROUGH OR BELOW FOOTING
1/2" = 1'-0"

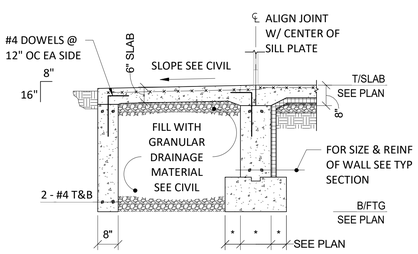

10 TYPICAL STOOP DETAIL
1/2" = 1'-0"

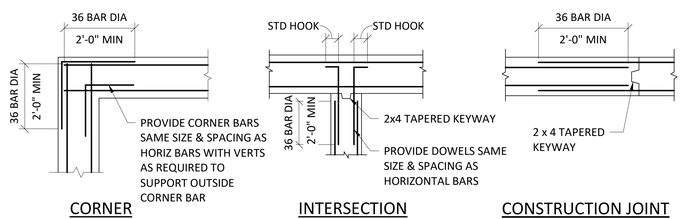

11 TYPICAL WALL REINFORCING
1/2" = 1'-0"

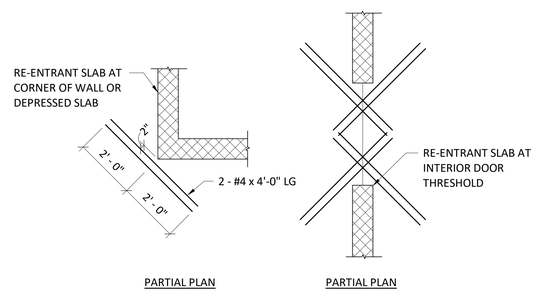

12 SLAB ON GRADE RE-ENTRANT CORNER DETAILS
1/2" = 1'-0"

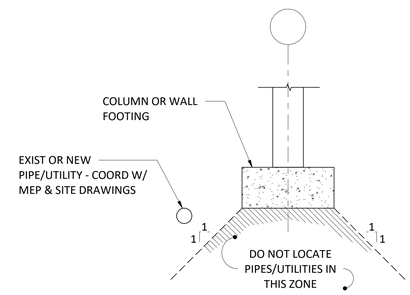

NOTE:
CONTRACTOR TO COORDINATE LOCATION AND ELEVATION OF UNDERGROUND PIPE/UTILITIES W/ BOTTOM OF FOOTING ELEVATION, FOOTING MAY NEED TO BE DROPED TO AVOID INTERFERENCE.

13 UTILITY PARALLEL TO FDN
1/2" = 1'-0"

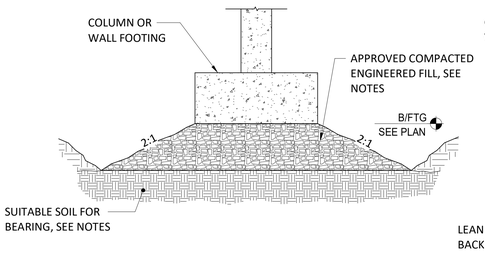

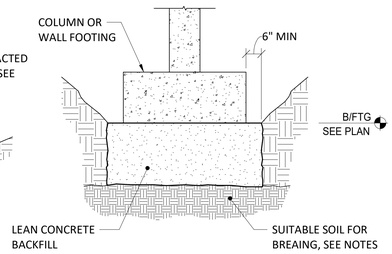

NOTE:
1. SUITABLE BEARING TO BE VERIFIED ON SITE BY A REPRESENTATIVE OF A QUALIFIED SOIL TESTING AGENCY IN ACCORDANCE WITH THE SITE SPECIFIC GEOTECHNICAL REPORT.
2. SEE GENERAL NOTES, SPECIFICATIONS, AND GEOTECHNICAL REPORT FOR LIMITS AND DETAILS OF GENERAL / ENGINEERED FILL, LEAN CONCRETE, AND PREPARATION OF SUBGRADE

14 OVER-EXCAVATION DETAIL - FILL OPTIONS
1/2" = 1'-0"

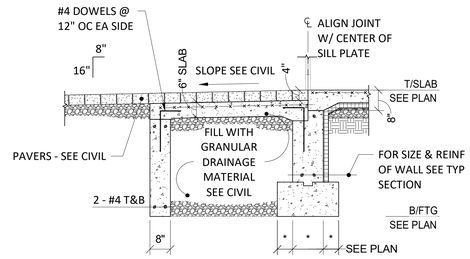

15 STOOP DETAIL AT MAIN ENTRANCE
1/2" = 1'-0"

DOB APPROVAL STAMPS

PROJECT
GRACE MANOR
3413 W OGDEN AVENUE
CHICAGO, IL 60623

CLIENT
EAST LAKE MANAGEMENT

COLLABORATORS
MI STRUCTURAL
3141 Ezekiel Dr, Unit F Plainfield, IL 60587
SITE DESIGN GROUP
888 South Michigan Avenue Suite 1000 Chicago, IL 60605
MEPIS
36 South Wabash Avenue, Chicago, IL 60603
EVA
420 West Huron Street, Chicago, IL 60654

223 WEST OHIO STREET | CHICAGO, ILLINOIS 60654 | +1.312.895.4438 | WWW.JGMA.COM |

NO.	DESCRIPTION	DATE
4	BUILDING PERMIT	12.16.2022
3	HUD REVIEW	11.11.2022
2	90% PERMIT SET	12.17.2021
1	DESIGN DEVELOPMENT	10.15.2021

KEY PLAN

STAMP

EXP: 11.30.24

SHEET TITLE

FOUNDATION DETAILS

S3-101

SHEET NUMBER

© JGMA 2021

PROJECT NO 20154

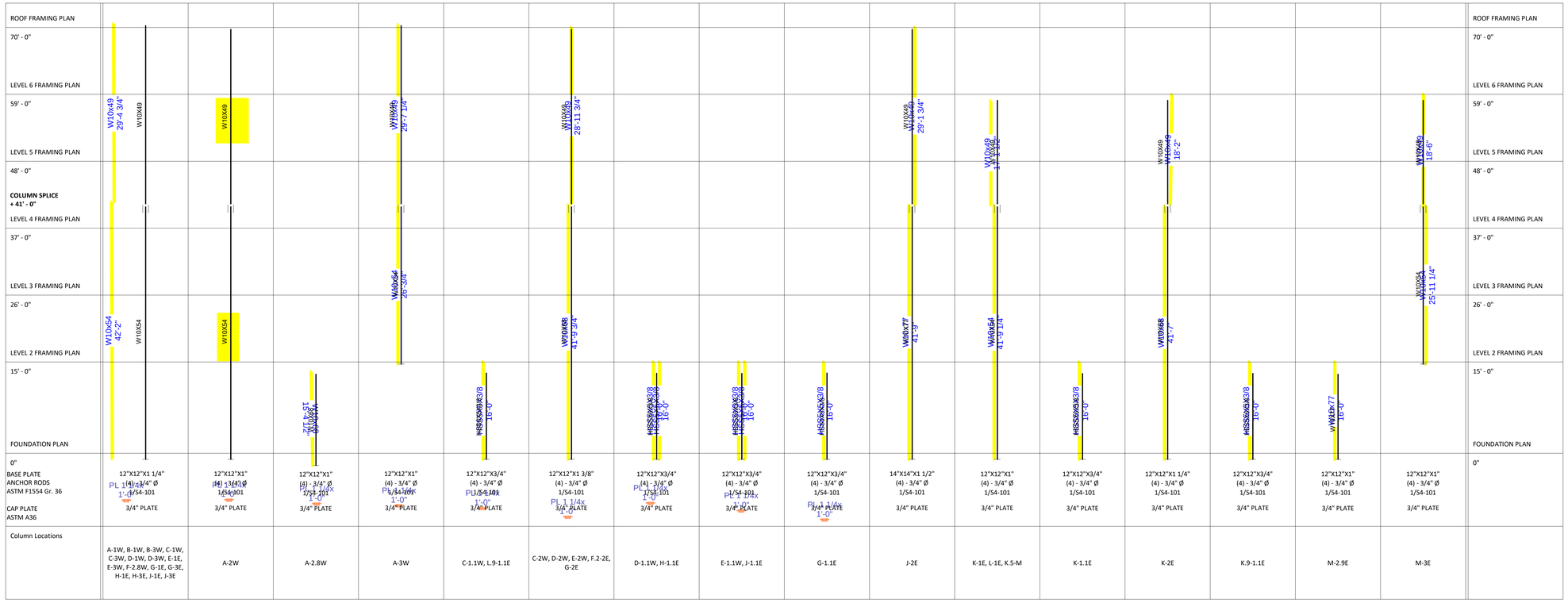

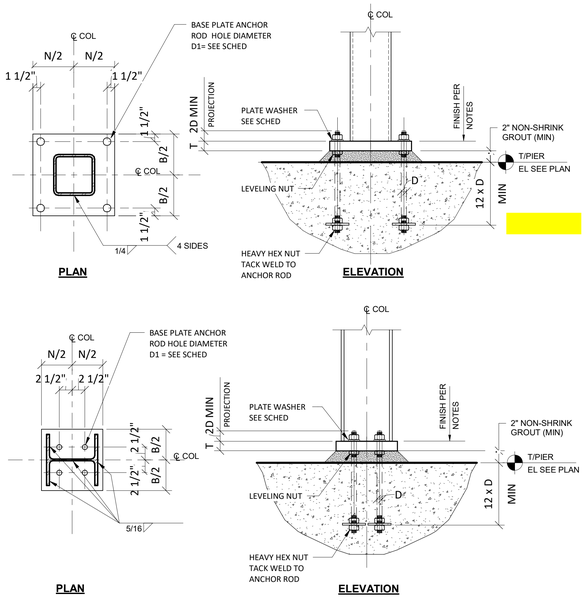

1 GRAVITY COLUMN BASE PLATE DETAIL
1" = 1'-0"

DOB APPROVAL STAMPS

PROJECT
GRACE MANOR
3413 W OGDEN AVENUE
CHICAGO, IL 60623

CLIENT
EAST LAKE MANAGEMENT

COLLABORATORS
MI STRUCTURAL
334 E Cotton St, Unit F Palatine, IL 60067

SITE DESIGN GROUP
888 South Michigan Avenue Suite 1000 Chicago, IL 60605

MEPIS
36 South Wabash Avenue, Chicago, IL 60603

EVA
420 West Huron Street, Chicago, IL 60654

223 WEST OHIO STREET | CHICAGO, ILLINOIS 60654 | +1.312.895.4438 | WWW.JGMA.COM |

NO.	DESCRIPTION	DATE
4	BUILDING PERMIT	12.16.2022
3	HUD REVIEW	11.11.2022
2	90% PERMIT SET	12.17.2021
1	DESIGN DEVELOPMENT	10.15.2021

KEY PLAN

STAMP

STATE OF ILLINOIS
RYAN A. LEZCANO
081-007435
LICENSED PROFESSIONAL ENGINEER OF STRUCTURAL ENGINEERING
EXP: 11.30.24

SHEET TITLE

COLUMN SCHEDULE

S4-101

SHEET NUMBER

© JGMA 2021

PROJECT NO.20154

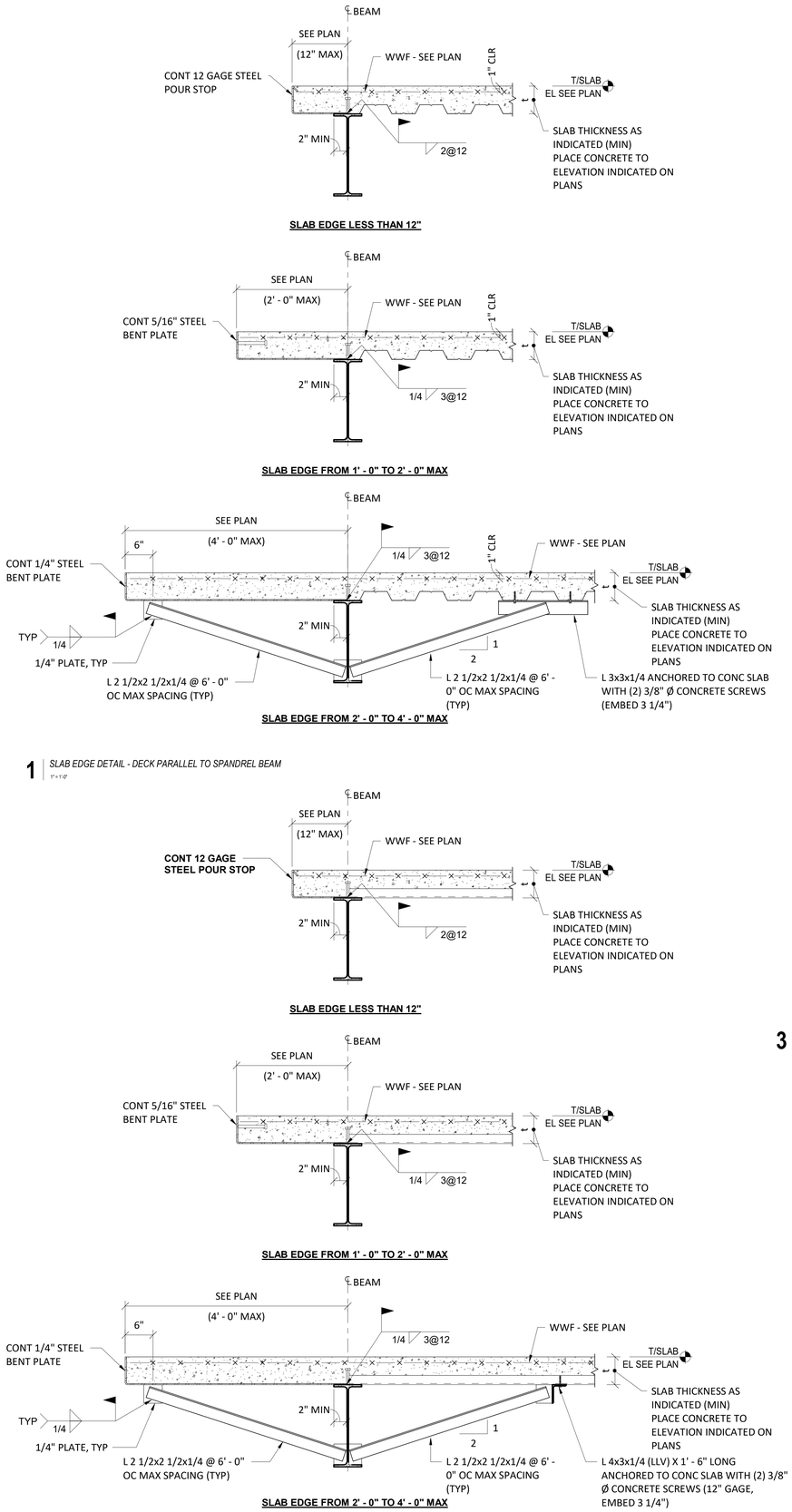

1 *SLAB EDGE DETAIL - DECK PARALLEL TO SPANDREL BEAM*
1" = 1'-0"

2 *SLAB EDGE DETAIL - DECK PERPENDICULAR TO SPANDREL BEAM*
1" = 1'-0"

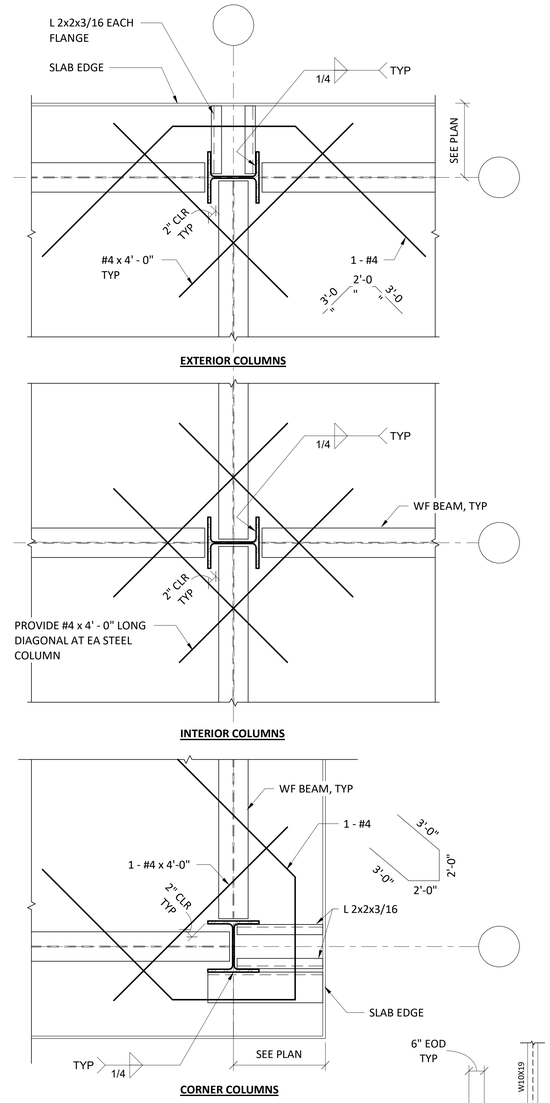

3 *TYPICAL SLAB REINFORCEMENT AT COLUMNS*
1" = 1'-0"

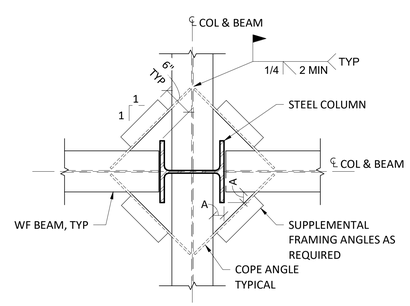

NOTE:
PROVIDE SUPPORT ANGLES WHEN A > 6" OR AS REQUIRED. T/ANGLE SHALL = T/STEEL BEAM.

4 *TYPICAL STEEL DECK SUPPORT AT COLUMNS*
1" = 1'-0"

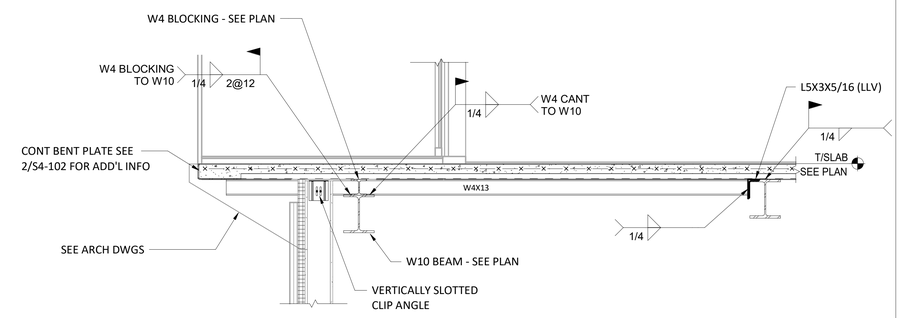

5 *TYPICAL SECTION AT BALCONIES*
3/4" = 1'-0"

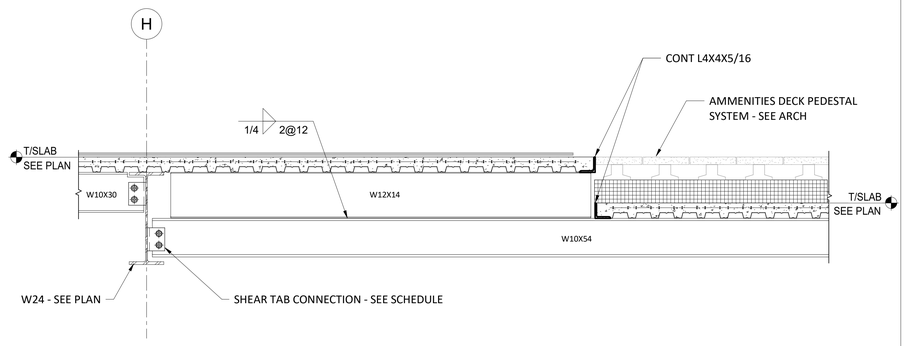

6 *TYPICAL SECTION AT AMMENITIES DECK*
3/4" = 1'-0"

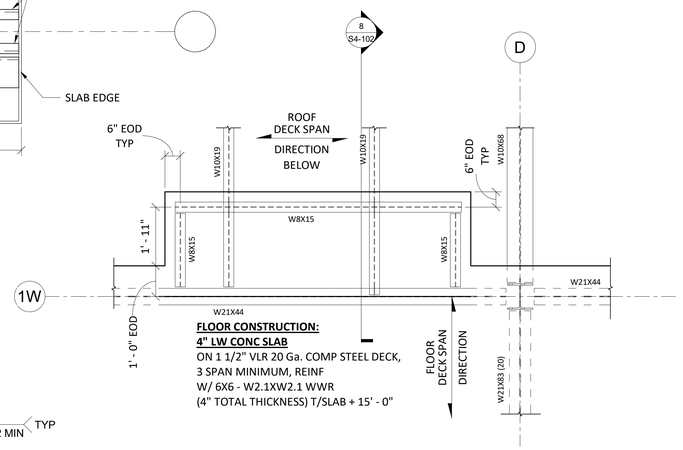

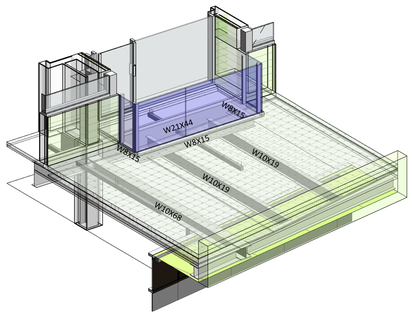

7 *ENLARGED FRAMING PLAN AT LEVEL 2 BALCONY*
1/2" = 1'-0"

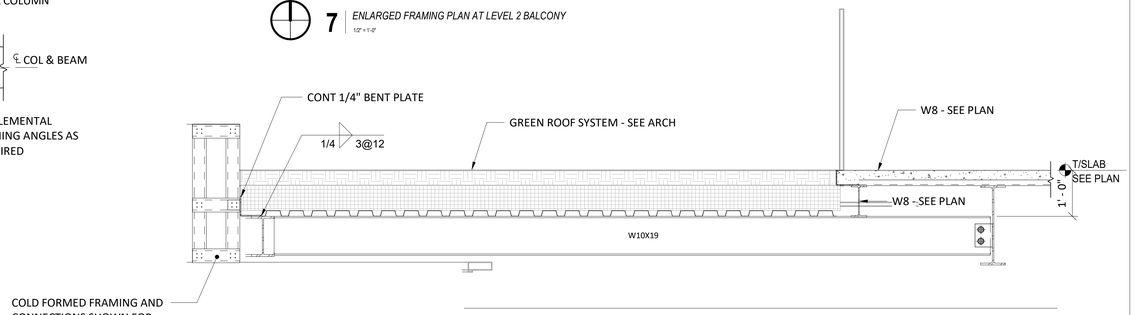

8 *TYPICAL SECTION AT LEVEL 2 BALCONIES*
3/4" = 1'-0"

DOB APPROVAL STAMPS

PROJECT
GRACE MANOR
3413 W OGDEN AVENUE
CHICAGO, IL 60623

CLIENT
EAST LAKE MANAGEMENT

COLLABORATORS
ML STRUCTURAL
334 E. Crider St. Unit F Portland, IL 60367
SITE DESIGN GROUP
888 South Michigan Avenue Suite 1000 Chicago, IL 60605
MEPIS
36 South Wabash Avenue, Chicago, IL 60603
EVA
420 West Huron Street, Chicago, IL 60654

223 WEST OHIO STREET | CHICAGO, ILLINOIS 60654 | +1.312.895.4438 | WWW.JGMA.COM |

NO.	DESCRIPTION	DATE
4	BUILDING PERMIT	12.16.2022
3	HUD REVIEW	11.11.2022
2	90% PERMIT SET	12.17.2021
1	DESIGN DEVELOPMENT	10.15.2021

KEY PLAN

STAMP

SHEET TITLE
FRAMING DETAILS

S4-102
SHEET NUMBER

© JGMA 2021
PROJECT NO 20154

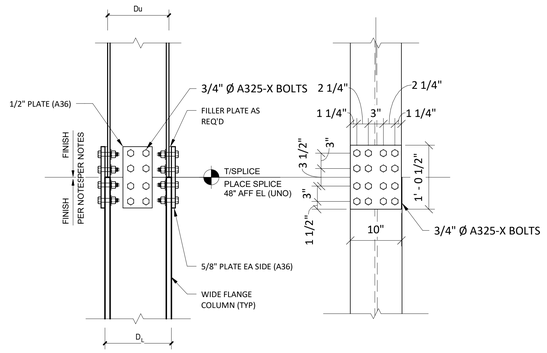

INTERIOR W10 COLUMN

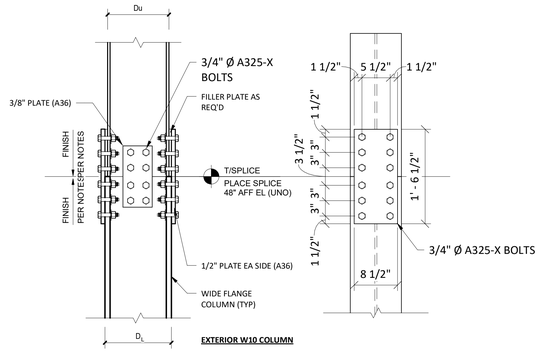

EXTERIOR W10 COLUMN

NOTES:
1. COLUMN ENDS SHALL BE FINISHED TO BEAR ACCORDING TO AISC SECTION M2.6.

1 *COLUMN SPLICE DETAIL*
1" = 1'-0"

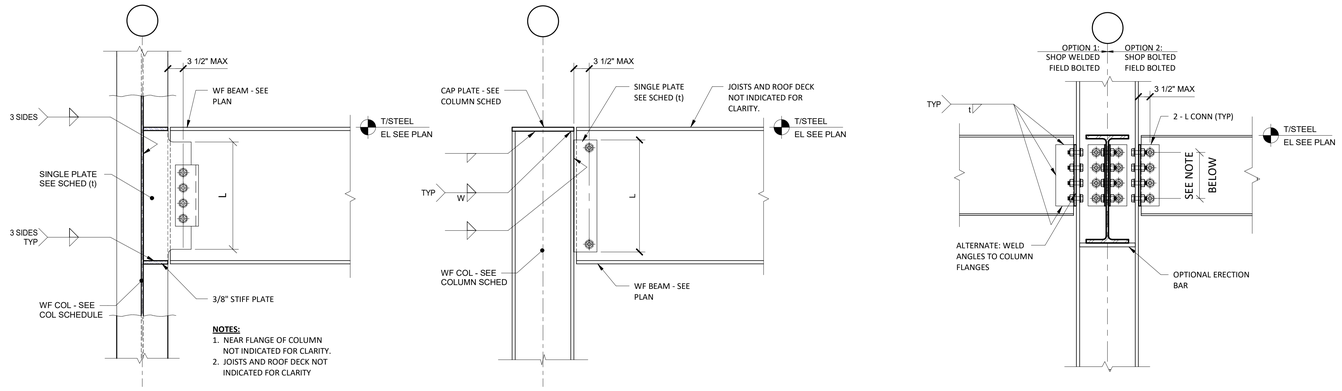

NOTES:
1. NEAR FLANGE OF COLUMN NOT INDICATED FOR CLARITY.
2. JOISTS AND ROOF DECK NOT INDICATED FOR CLARITY

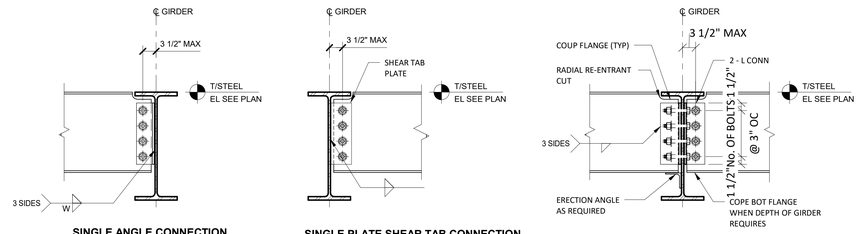

SINGLE ANGLE CONNECTION **SINGLE PLATE SHEAR TAB CONNECTION** **DOUBLE ANGLE CONNECTION**

STEEL BEAM TO GIRDER OR BEAM TO COLUMN CONNECTION SCHEDULE

BEAM SIZE	BOLTS		WELD SIZE (N)	PLATE		
	NUMBER	SIZE & TYPE		THICKNESS (t, IN)	L (IN)	TYPE
W8 **	2	3/4" A325-N	3/16"	1/4	5 1/2	ASTM A36
W10 **	2	3/4" A325-N	1/4"	1/4	5 1/2	ASTM A36
W12 **	3	3/4" A325-N	1/4"	1/4	8 1/2	ASTM A36
W14 **	3	3/4" A325-N	1/4"	1/4	8 1/2	ASTM A36
W16 **	4	3/4" A325-N	1/4"	1/4	11 1/2	ASTM A36
W18 **	4	3/4" A325-N	1/4"	1/4	11 1/2	ASTM A36
W21 **	6	3/4" A325-N	1/4"	5/16	17 1/2	ASTM A36
W24 **	6	3/4" A325-N	1/4"	5/16	17 1/2	ASTM A36

STEEL BEAM/GIRDER TO GIRDER WF COLUMN CONNECTION SCHEDULE

BEAM SIZE	BOLTS		WELD SIZE (t)	DOUBLE ANGLE		
	NUMBER	SIZE		SIZE	L (IN)	TYPE
W8	2	3/4" Ø	1/4	2 - L 4 x 4 x 1/4	5 1/2	ASTM A36
W10	2	3/4" Ø	1/4	2 - L 4 x 4 x 1/4	5 1/2	ASTM A36
W12	3	3/4" Ø	1/4	2 - L 4 x 4 x 1/4	8 1/2	ASTM A36
W14	3	3/4" Ø	1/4	2 - L 4 x 4 x 1/4	8 1/2	ASTM A36
W16	4	3/4" Ø	1/4	2 - L 4 x 4 x 1/4	11 1/2	ASTM A36
W18	4	3/4" Ø	1/4	2 - L 4 x 4 x 1/4	11 1/2	ASTM A36
W21	6	3/4" Ø	1/4	2 - L 4 x 4 x 1/4	17 1/2	ASTM A36
W24	6	3/4" Ø	1/4	2 - L 4 x 4 x 1/4	17 1/2	ASTM A36

NOTES:
1. ALL BOLTS TO BE A325-N IN STANDARD HOLES UNLESS NOTED OTHERWISE.
2. ALL PLATES ARE A36 GRADE STEEL.
3. ** AT LEVEL 6 AMMENITIES AND GREEN ROOF FRAMING USE DOUBLE ANGLE SHEAR CONNECTIONS.

2 *SHEAR CONNECTION SCHEDULE*
1" = 1'-0"

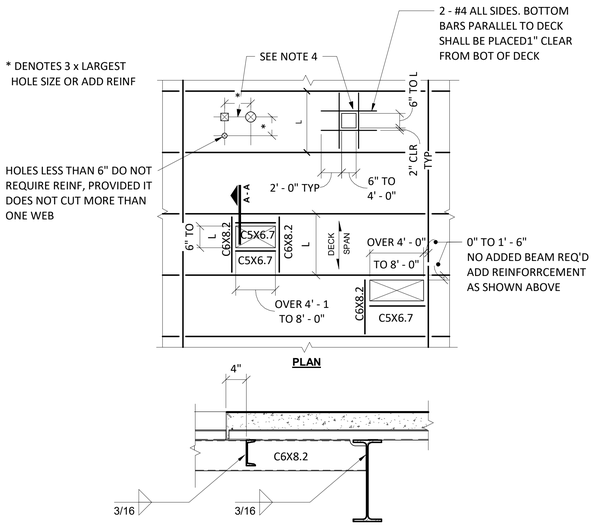

NOTES:

1. BLOCK OUT OPENING BEFORE PLACING CONCRETE.
2. REMOVE BLOCK OUT AND CUT DECK AFTER CONCRETE HAS CURED.
3. CONTRACTOR SHALL COORDINATE OPENING SIZE AND LOCATION WITH MECHANICAL AND ELECTRICAL CONTRACTORS AND ARCHITECTURAL DRAWINGS.
4. THE OPENING NOTED REQUIRES A CLEAR SPACING FROM ADJACENT OPENING OF 3 TIMES MAXIMUM OPENING DIMENSION. IF REQUIRED LAYOUT CANNOT CONFORM TO THESE REQUIREMENT, REINFORCE GROUP AS IF ONE COMBINED PENETRATION.

3 *SLAB OPENINGS IN COMPOSITE SLAB*
1" = 1'-0"

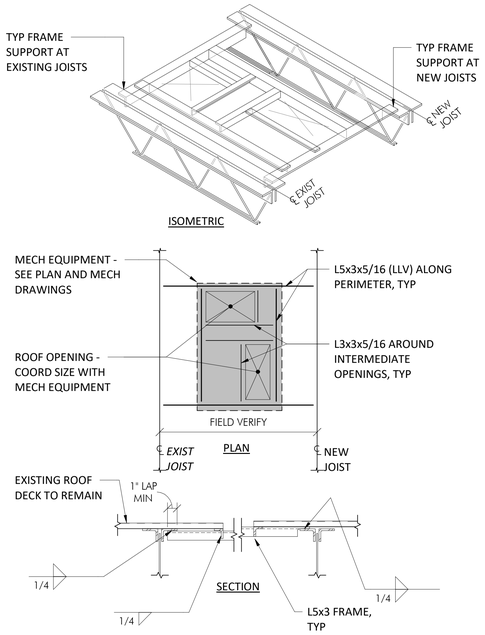

NOTE:
ROOF FRAMES REQUIRED AT ALL OPENINGS GREATER THAN 1'-0" OR WHERE NOTED ON PLAN.

4 *ROOF OPENING SUPPORT DETAIL AT NEW OR EXISTING ROOF JOISTS*
3/4" = 1'-0"

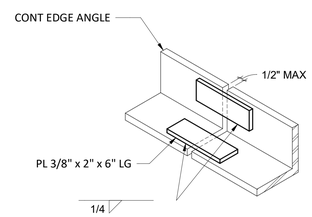

5 *TYP ROOF EDGE ANGLE SPLICE DETAIL*
1" = 1'-0"

DOB APPROVAL STAMPS

PROJECT
GRACE MANOR
3413 W OGDEN AVENUE
CHICAGO, IL 60623

CLIENT
EAST LAKE MANAGEMENT

COLLABORATORS
ML STRUCTURAL
3345 Corbin St. Unit F Pinkney, IL 60087
SITE DESIGN GROUP
888 South Michigan Avenue Suite 1000 Chicago, IL 60605
MEPIS
36 South Wabash Avenue, Chicago, IL 60603
EVA
420 West Huron Street, Chicago, IL 60654

JGMA
223 WEST OHIO STREET | CHICAGO, ILLINOIS 60654 | +1.312.895.4438 | WWW.JGMA.COM |

NO.	DESCRIPTION	DATE
4	BUILDING PERMIT	12.16.2022
3	HUD REVIEW	11.11.2022
2	90% PERMIT SET	12.17.2021
1	DESIGN DEVELOPMENT	10.15.2021

KEY PLAN

STAMP

STATE OF ILLINOIS
RYAN A. LEZCANO
081-007435
LICENSED STRUCTURAL ENGINEER
EXP: 11.30.24

SHEET TITLE
FRAMING DETAILS

S4-103
SHEET NUMBER

© JGMA 2021
PROJECT NO 20154

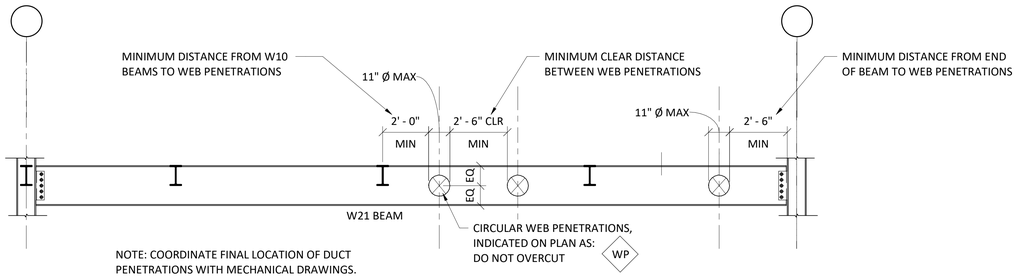

1 *STEEL BEAM WEP PENETRATION DETAIL - WP*
3/8" = 1'-0"

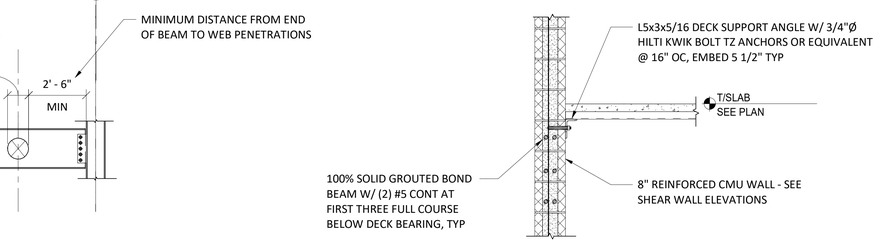

2 *TYP ROOF DECK BEARING DETAIL*
3/4" = 1'-0"

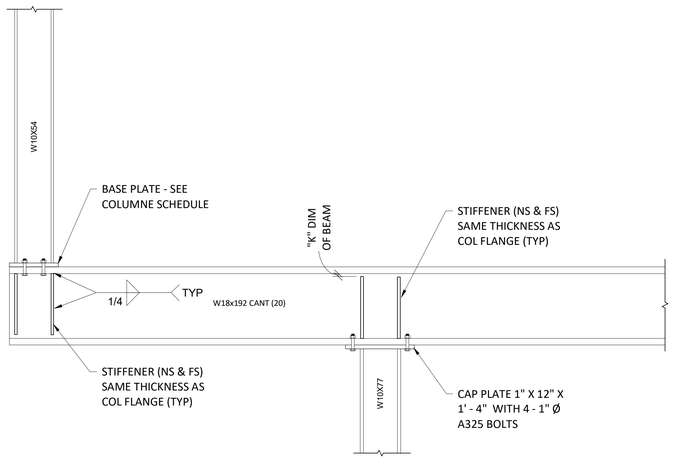

3 *SECTION AT CANTILEVER BEAM*
3/4" = 1'-0"

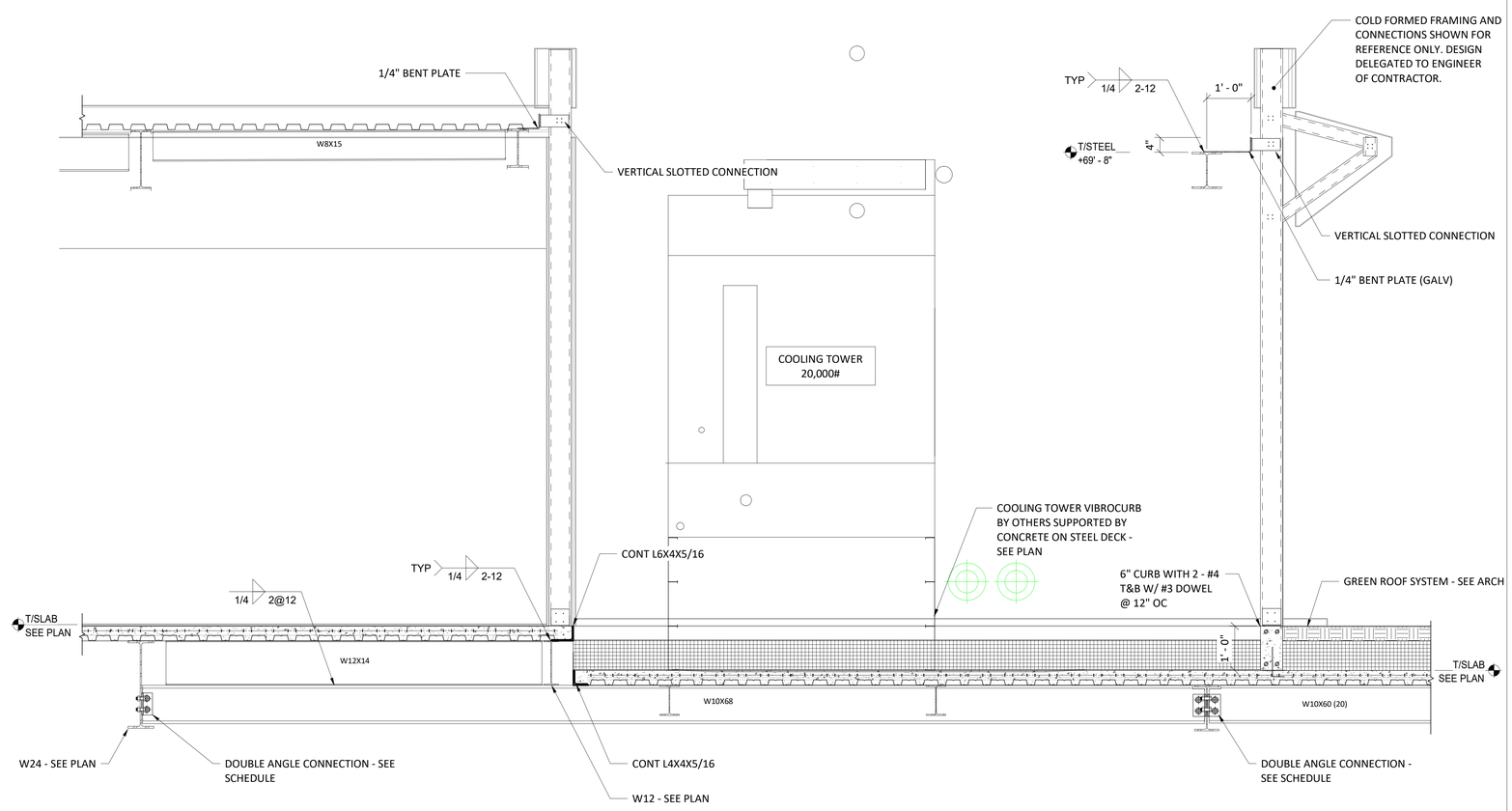

4 *SECTION AT COOLING TOWER*
3/4" = 1'-0"

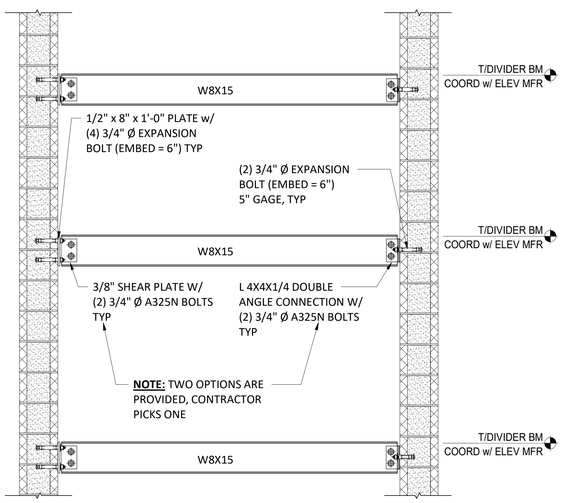

5 *ELEVATOR DIVIDER BEAM DETAIL*
3/4" = 1'-0"

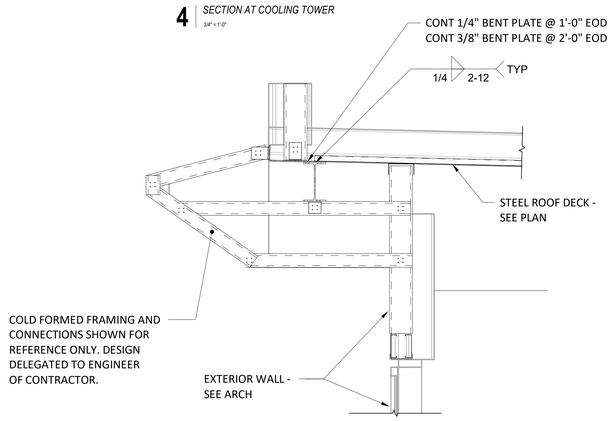

6 *SECTION AT ROOF - ABOVE BALCONY*
3/4" = 1'-0"

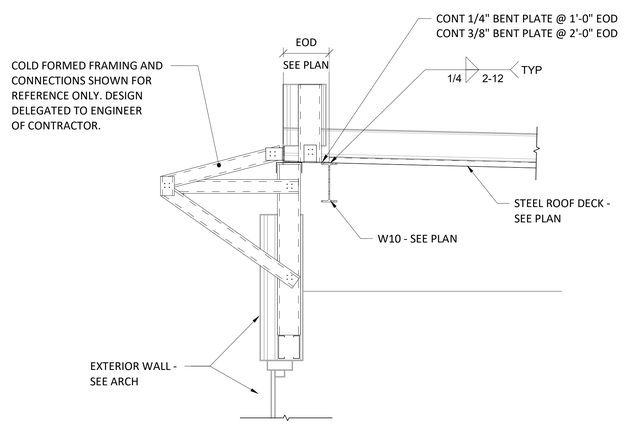

7 *SECTION AT ROOF*
3/4" = 1'-0"

DOB APPROVAL STAMPS

223 WEST OHIO STREET | CHICAGO, ILLINOIS 60654 | +1.312.895.4438 | WWW.JGMA.COM |

PROJECT
GRACE MANOR
3413 W OGDEN AVENUE
CHICAGO, IL 60623

CLIENT
EAST LAKE MANAGEMENT

COLLABORATORS
ML STRUCTURAL
3141 E Chicago St | Unit F Phoenix, IL 60097
SITE DESIGN GROUP
888 South Michigan Avenue Suite 1000 Chicago, IL 60605
MEPIS
36 South Wabash Avenue, Chicago, IL 60603
EVA
420 West Huron Street, Chicago, IL 60654

NO.	DESCRIPTION	DATE
4	BUILDING PERMIT	12.16.2022
3	HUD REVIEW	11.11.2022
2	90% PERMIT SET	12.17.2021

KEY PLAN

STAMP

EXP: 11.30.24

SHEET TITLE
FRAMING DETAILS

S4-104
SHEET NUMBER

© JGMA 2021
PROJECT NO.20154

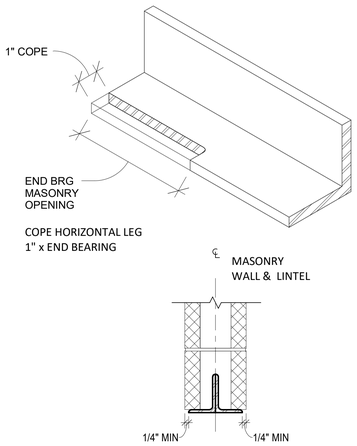

DETAIL - A

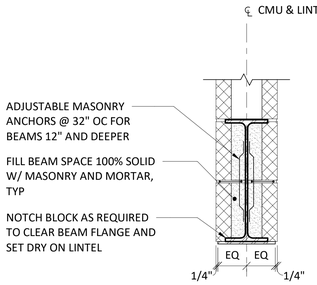

DETAIL - B

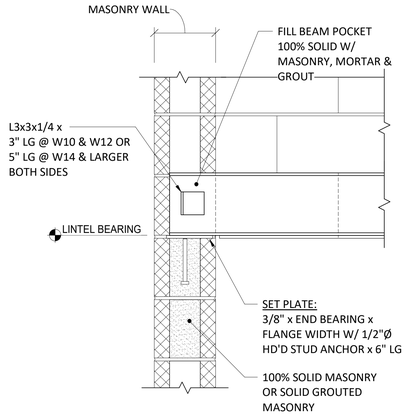

DETAIL - C

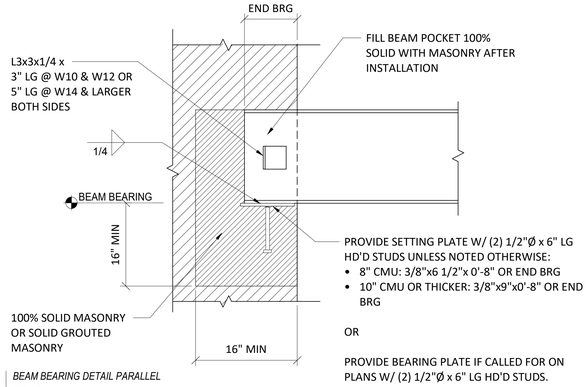

3 *BEAM BEARING DETAIL PARALLEL*
1 1/2" = 1'-0"

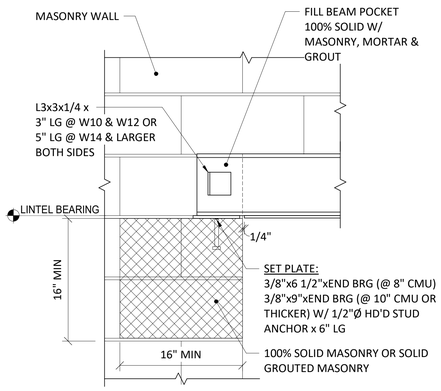

DETAIL - D

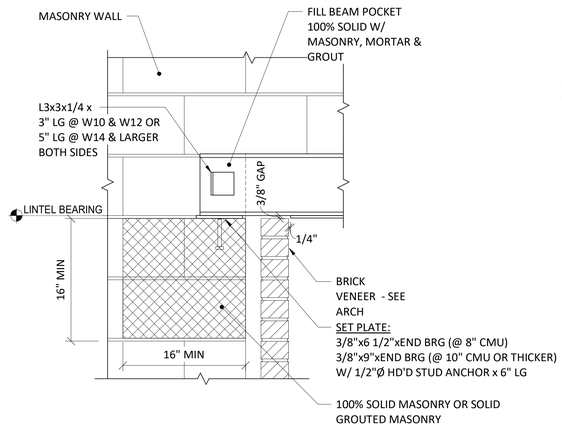

DETAIL - E

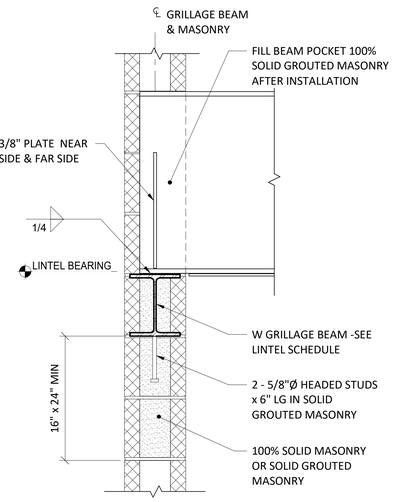

DETAIL - F

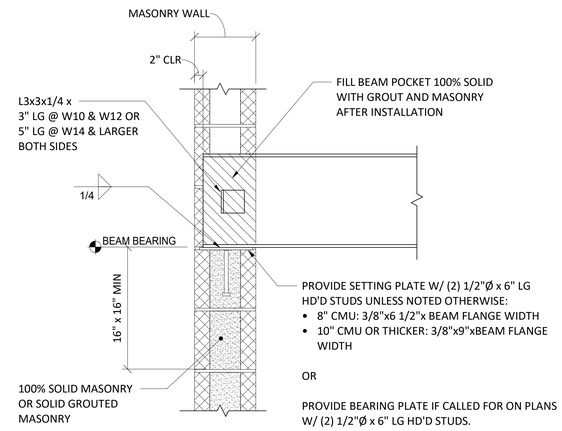

4 *BEAM BEARING DETAIL PERPENDICULAR*
1 1/2" = 1'-0"

LINTEL SCHEDULE FOR NON-LOAD BEARING WALLS

SPAN	4" BRICK	4" WALL	6" WALL	8" WALL	10" WALL	12" WALL	14" WALL	BEARING
8" TO 4'-0"	L3 1/2 x 3 1/2 x 5/16	L2 x 2 x 3/16 + L1 1/2 x 1 1/2 x 3/16	2 - L3 1/2 x 2 1/2 x 5/16 LLV	2 - L4 x 3 1/2 x 5/16 LLV	L4 x 4 x 5/16 + L5 x 5 x 5/16	3 - L4 x 3 1/2 x 5/16 LLV	2 - L4 x 3 1/2 x 5/16 LLV 2 - L4 x 3 x 5/16 LLV	6"
4'-1" TO 6'-4"	L5 x 3 1/2 x 3/8 LLV	L3 x 2 x 3/8 LLV + L2 1/2 x 1 1/2 x 1/4 LLV	L5 x 3 x 5/16 LLV + L3 1/2 x 2 1/2 x 5/16 LLV	W8 x 10 + PL 5/16" x 7 1/2"	W8 x 10 + PL 5/16" x 9 1/2"	W8 x 18 + PL 5/16" x 11 1/2"	W8 x 18 + PL 5/16" x 1'-1 1/2"	6"
6'-5" TO 9'-4"	--	--	W8 x 10 + PL 5/16" x 5 1/2"	W8 x 15 + PL 5/16" x 7 1/2"	W8 x 15 + PL 5/16" x 9 1/2"	W8 x 18 + PL 5/16" x 11 1/2"	W8 x 21 + PL 5/16" x 1'-1 1/2"	8"
9'-5" TO 14'-0"	--	--	--	W8 x 18 + PL 5/16" x 7 1/2"	W8 x 21 + PL 5/16" x 9 1/2"	W8 x 24 + PL 5/16" x 11 1/2"	W8 x 28 + PL 5/16" x 1'-1 1/2"	8"

NOTES:
1. SEE TYPICAL LINTEL DETAILS.
2. COORDINATE LOCATIONS AND QUANTITY OF LINTELS IN NON LOAD BEARING WALLS WITH ARCHITECTURAL, MECHANICAL, PLUMBING & ELECTRICAL DRAWINGS.
3. NO LINTEL IS REQUIRED FOR MECHANICAL OPENINGS 12" AND LESS.
4. LINTEL BEARING: WALL THICKNESS X 16" X 16" - 100% SOLID MASONRY OR SOLID GROUTED MASONRY.
5. HOLD LINTEL END 1" CLEAR OF OPPOSITE FACE WHEN BEARING ON PERPENDICULAR WALLS.

DOB APPROVAL STAMPS

PROJECT
GRACE MANOR
3413 W OGDEN AVENUE
CHICAGO, IL 60623

CLIENT
EAST LAKE MANAGEMENT

COLLABORATORS
ML STRUCTURAL
3141 E Cortez St | Unit F Pontiac, IL 60987
SITE DESIGN GROUP
888 South Michigan Avenue Suite 1000 Chicago, IL 60605
MEPIS
36 South Wabash Avenue, Chicago, IL 60603
EVA
429 West Huron Street, Chicago, IL 60654

223 WEST OHIO STREET | CHICAGO, ILLINOIS 60654 | +1.312.895.4438 | WWW.JGMA.COM |

NO.	DESCRIPTION	DATE
4	BUILDING PERMIT	12.16.2022
3	HUD REVIEW	11.11.2022
2	90% PERMIT SET	12.17.2021
1	DESIGN DEVELOPMENT	10.15.2021

KEY PLAN

STAMP

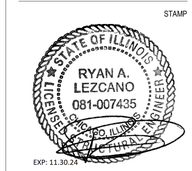

EXP: 11.30.24

SHEET TITLE

MASONRY DETAILS

S5-101

SHEET NUMBER

© JGMA 2021

PROJECT NO.20154

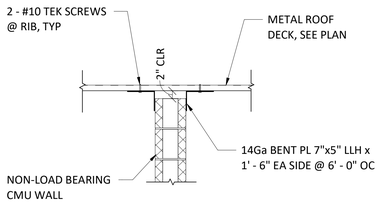

1 *CMU HEAD CONN NON-LOAD BEARING WALL*
3/4" = 1'-0"

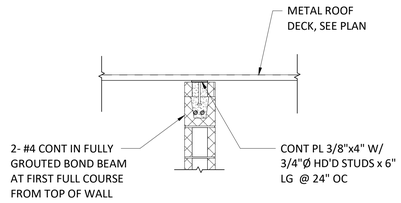

2 *CMU HEAD CONN - LOAD BEARING WALL*
3/4" = 1'-0"

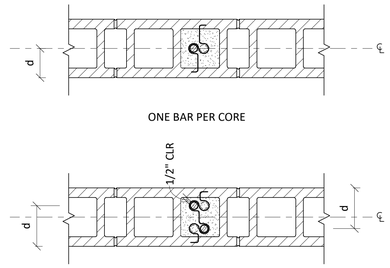

NOTE:
1. PROVIDE REBAR POSITIONERS AT ALL REINFORCED MASONRY WALLS AT 4'-0" OC VERT ALONG BED JOINTS THAT DO NOT CONTAIN HORIZONTAL JOINT/LADDER REINF - SEE PLAN FOR SIZE AND SPACING OF VERT WALL REINFORCING.
2. PLACE VERT REINF BARS WITHIN A TOLERANCE OF +/-1/2" WHEN d IS LESS THAN OR EQUAL TO 8" AND WITHIN A TOLERANCE OF +/-1" WHEN d IS GREATER THAN 8".

3 *REBAR POSITIONER DETAIL*
1 1/2" = 1'-0"

VERTICAL REINFORCING AT INTERIOR WALLS				
HEIGHT	6" CMU	8" CMU	10" CMU	12" CMU
0'-0" TO 14'-0"	NONE	NONE	NONE	NONE
14'-1" TO 18'-0"	#4 @ 96" OC	NONE	NONE	NONE
18'-1" TO 20'-0"	#4 @ 72" OC	#4 @ 96" OC	NONE	NONE
20'-1" TO 24'-0"	#4 @ 40" OC	#5 @ 96" OC	NONE	NONE
24'-1" TO 30'-0"	#5 @ 24" OC	#5 @ 48" OC	#4 @ 96" OC	#4 @ 96" OC

NOTE:
1. PROVIDE DOWELS AT BASE OF WALL TO MATCH SIZE AND SPACING OF SCHEDULED VERTICAL REINFORCING.
2. COORDINATE INTERIOR WALL LOCATIONS AND HEIGHTS WITH ARCHITECTURAL DRAWINGS.

4 *INTERIOR WALL REINFORCEMENT SCHEDULE*
1" = 1'-0"

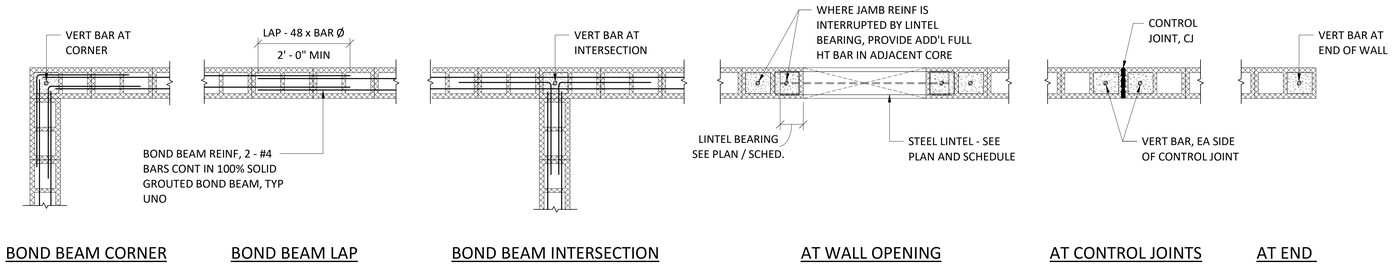

5 *TYPICAL MASONRY REINFORCING DETAILS*
3/4" = 1'-0"

DOB APPROVAL STAMPS

PROJECT
GRACE MANOR
3413 W OGDEN AVENUE
CHICAGO, IL 60623

CLIENT
EAST LAKE MANAGEMENT

COLLABORATORS
ML STRUCTURAL
3946 Ecorse Rd, Unit F Plattsmouth, IL 60097
SITE DESIGN GROUP
888 South Michigan Avenue Suite 1000 Chicago, IL 60605
MEPIS
36 South Wabash Avenue, Chicago, IL 60603
EVA
420 West Huron Street, Chicago, IL 60654

223 WEST OHIO STREET | CHICAGO, ILLINOIS 60654 | +1.312.895.4438 | WWW.JGMA.COM |

NO.	DESCRIPTION	DATE
4	BUILDING PERMIT	12.16.2022
3	HUD REVIEW	11.11.2022
2	90% PERMIT SET	12.17.2021
1	DESIGN DEVELOPMENT	10.15.2021

KEY PLAN

STAMP

STATE OF ILLINOIS
RYAN A. LEZCANO
081-007435
LICENSED PROFESSIONAL ENGINEER
EXP: 11.30.24

SHEET TITLE
MASONRY DETAILS

S5-102
SHEET NUMBER

© JGMA 2021
PROJECT NO:20154

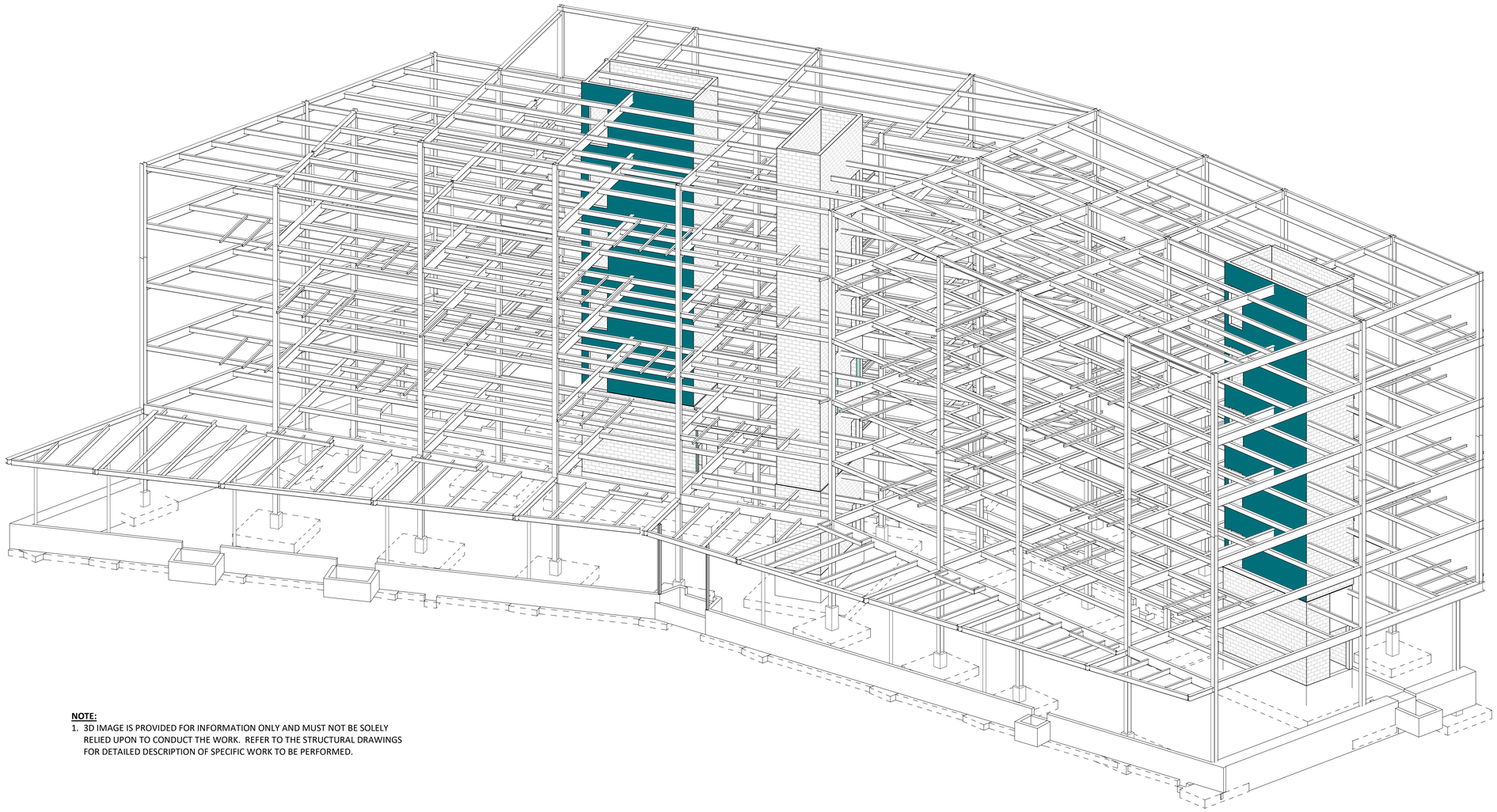

NOTE:

1. 3D IMAGE IS PROVIDED FOR INFORMATION ONLY AND MUST NOT BE SOLELY RELIED UPON TO CONDUCT THE WORK. REFER TO THE STRUCTURAL DRAWINGS FOR DETAILED DESCRIPTION OF SPECIFIC WORK TO BE PERFORMED.

1 *3D VIEW - STRUCTURAL FRAMING*

DOB APPROVAL STAMPS

PROJECT
GRACE MANOR
3413 W OGDEN AVENUE
CHICAGO, IL 60623

CLIENT
EAST LAKE MANAGEMENT

COLLABORATORS
ML STRUCTURAL
3446 S Cottage Grove Ave, Chicago, IL 60616
SITE DESIGN GROUP
888 South Michigan Avenue Suite 1000 Chicago, IL 60605
MEPIS
36 South Wabash Avenue, Chicago, IL 60603
EVA
420 West Huron Street, Chicago, IL 60654

NO.	DESCRIPTION	DATE
4	BUILDING PERMIT	12.16.2022
3	HUD REVIEW	11.11.2022
2	90% PERMIT SET	12.17.2021
1	DESIGN DEVELOPMENT	10.15.2021

KEY PLAN

STAMP

SHEET TITLE

3D VIEW

S6-101

SHEET NUMBER

© JGMA 2021

PROJECT NO.20154

223 WEST OHIO STREET | CHICAGO, ILLINOIS 60654 | +1.312.895.4438 | WWW.JGMA.COM |