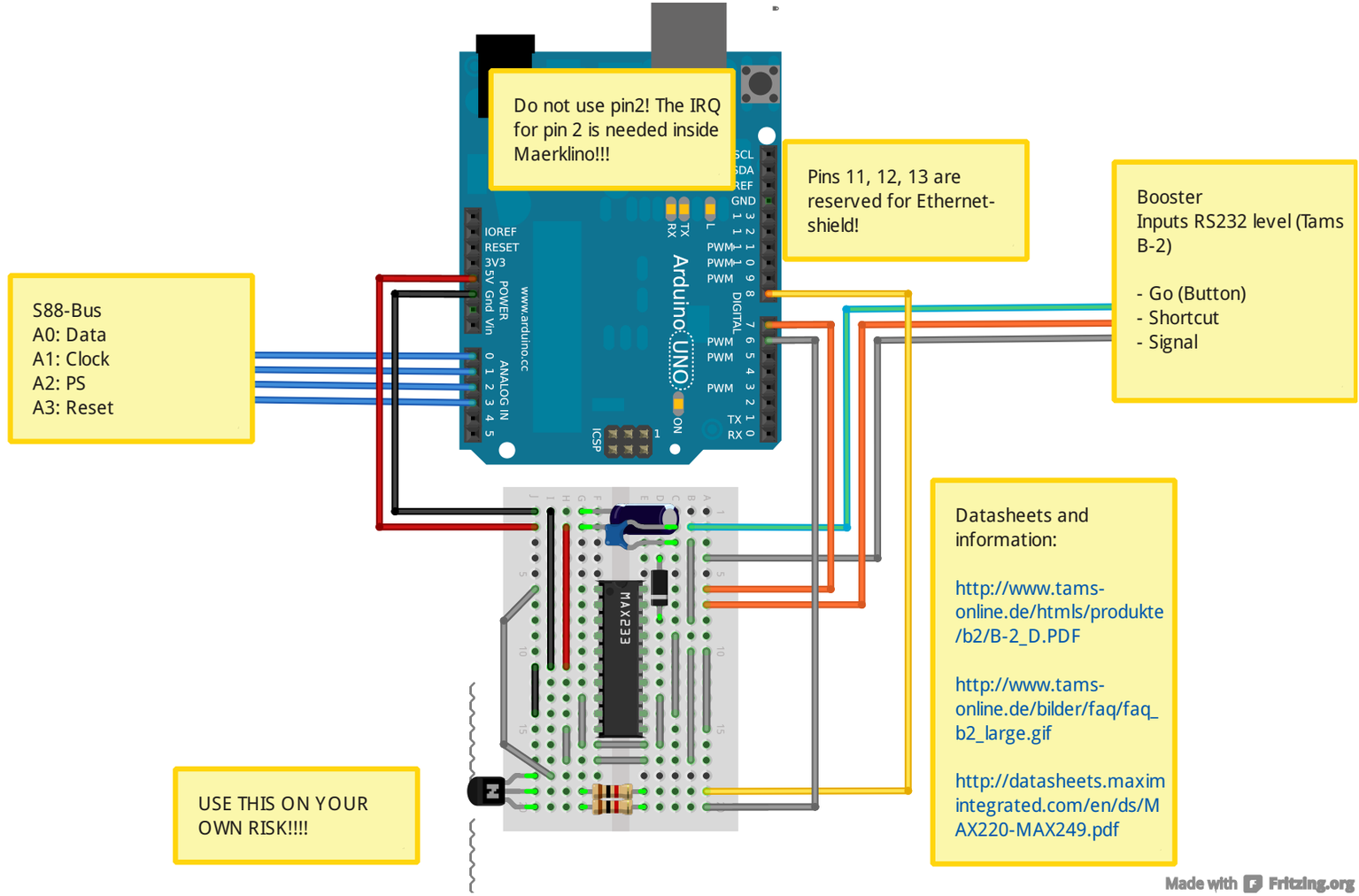
Do not use pin2! The IRQ for pin 2 is needed inside Maerklino!!!
Pins 11, 12, 13 are reserved for Ethernet-shield!
Booster
Inputs RS232 level (Tams B-2)
- Go (Button)
- Shortcut
- Signal
S88-Bus
A0: Data
A1: Clock
A2: PS
A3: Reset
Datasheets and information:
http://www.tams-online.de/htmls/produkte/b2/B-2_D.PDF
http://www.tams-online.de/bilder/faq/faq_b2_large.gif
http://datasheets.maximintegrated.com/en/ds/MAX220-MAX249.pdf
USE THIS ON YOUR OWN RISK!!!!
MAX233
Arduino UNO
www.arduino.cc
Made with Fritzing.org