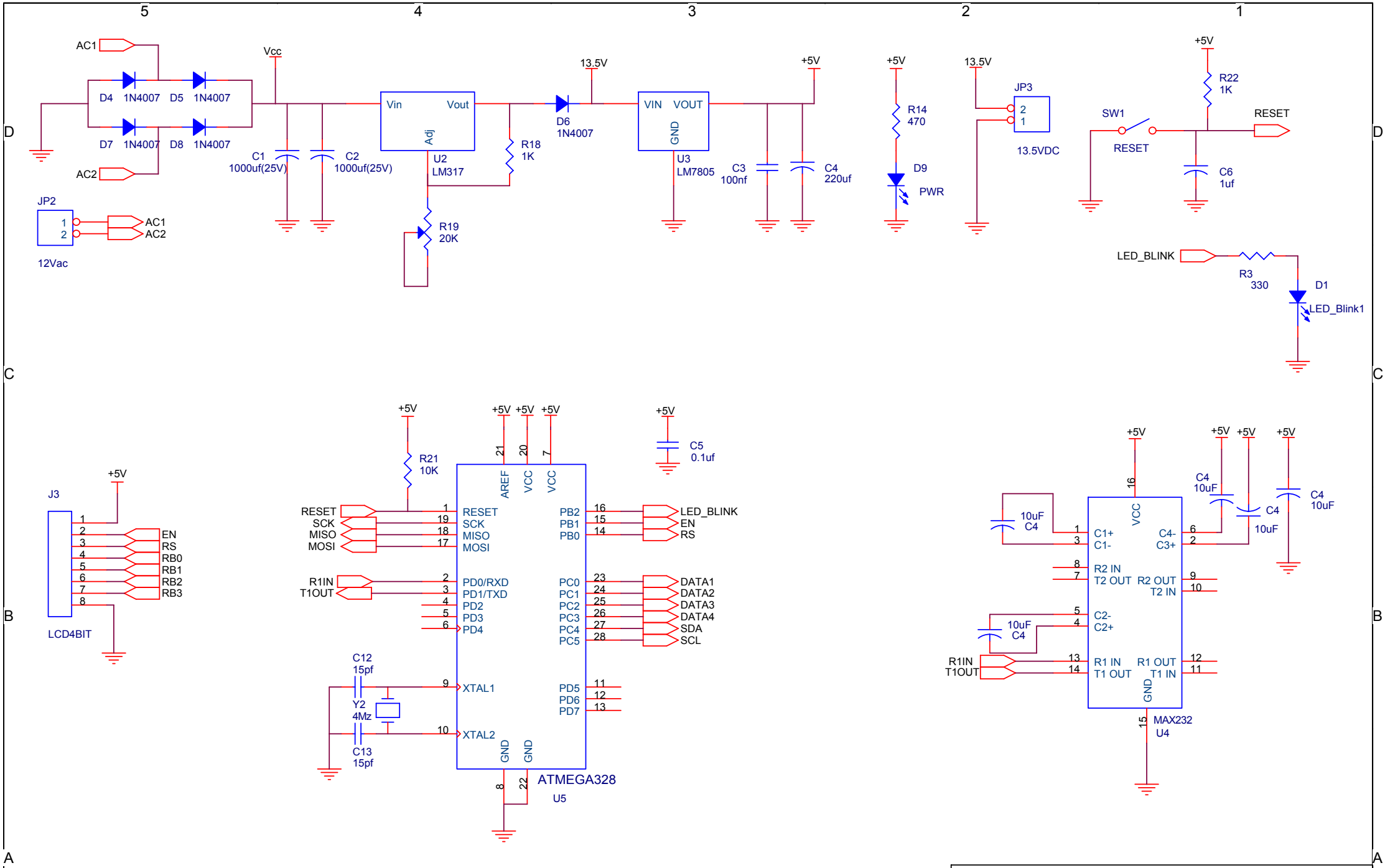

Title	Smart Reload Machine	
Size A4	Document Number SCHEM001	Rev 01
Date: Friday, March 20, 2015	Sheet 1 of 1	