Pipelining Hazards

A 5-Stage Pipeline

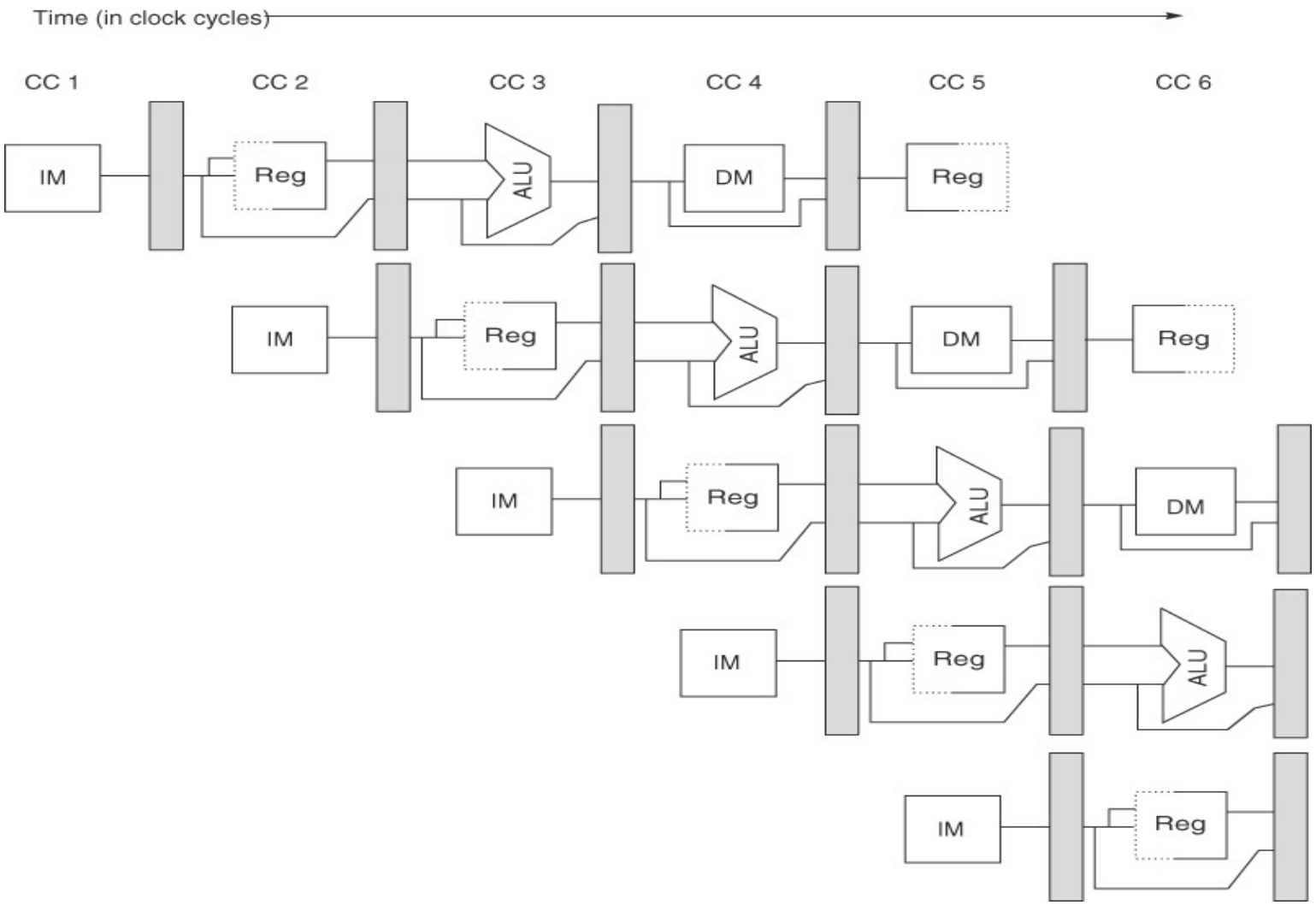

Source: H&P textbook

Hazards

- Structural hazards: different instructions in different stages (or the same stage) conflicting for the same resource
- Data hazards: an instruction cannot continue because it needs a value that has not yet been generated by an earlier instruction
- Control hazard: fetch cannot continue because it does not know the outcome of an earlier branch – special case of a data hazard – separate category because they are treated in different ways

Structural Hazards

- Example: a unified instruction and data cache → stage 4 (DM) and stage 1 (IF) can never coincide
- The later instruction and all its successors are delayed until a cycle is found when the resource is free → these are pipeline bubbles
- Structural hazards are easy to eliminate – increase the number of resources (for example, implement a separate instruction and data cache, add more register ports)

Data Hazards

- An instruction *produces* a value in a given pipeline stage
- A subsequent instruction *consumes* that value in a pipeline stage
- The consumer may have to be delayed so that the time of consumption is later than the time of production

Example 1 – No Bypassing

- Show the instruction occupying each stage in each cycle (no bypassing) if I1 is R1+R2→R3 and I2 is R3+R4→R5 and I3 is R7+R8→R9

CYC-1	CYC-2	CYC-3	CYC-4	CYC-5	CYC-6	CYC-7	CYC-8
IF	IF	IF	IF	IF	IF	IF	IF
D/R	D/R	D/R	D/R	D/R	D/R	D/R	D/R
ALU	ALU	ALU	ALU	ALU	ALU	ALU	ALU
DM	DM	DM	DM	DM	DM	DM	DM
RW	RW	RW	RW	RW	RW	RW	RW

Example 1 – No Bypassing

- Show the instruction occupying each stage in each cycle (no bypassing) if I1 is R1+R2→R3 and I2 is R3+R4→R5 and I3 is R7+R8→R9

CYC-1	CYC-2	CYC-3	CYC-4	CYC-5	CYC-6	CYC-7	CYC-8
IF I1	IF I2	IF I3	IF I3	IF I3	IF I4	IF I5	IF
D/R	D/R I1	D/R I2	D/R I2	D/R I2	D/R I3	D/R I4	D/R
ALU	ALU	ALU I1	ALU	ALU	ALU I2	ALU I3	ALU
DM	DM	DM	DM I1	DM	DM	DM I2	DM I3
RW	RW	RW	RW	RW I1	RW	RW	RW I2

Example 2 – Bypassing

- Show the instruction occupying each stage in each cycle (with bypassing) if I1 is R1+R2→R3 and I2 is R3+R4→R5 and I3 is R3+R8→R9. Identify the input latch for each input operand.

CYC-1	CYC-2	CYC-3	CYC-4	CYC-5	CYC-6	CYC-7	CYC-8
IF	IF	IF	IF	IF	IF	IF	IF
D/R	D/R	D/R	D/R	D/R	D/R	D/R	D/R
ALU	ALU	ALU	ALU	ALU	ALU	ALU	ALU
DM	DM	DM	DM	DM	DM	DM	DM
RW	RW	RW	RW	RW	RW	RW	RW

Example 2 – Bypassing

- Show the instruction occupying each stage in each cycle (with bypassing) if I1 is R1+R2→R3 and I2 is R3+R4→R5 and I3 is R3+R8→R9. Identify the input latch for each input operand.

CYC-1	CYC-2	CYC-3	CYC-4	CYC-5	CYC-6	CYC-7	CYC-8
IF I1	IF I2	IF I3	IF I4	IF I5	IF	IF	IF
D/R	D/R I1	D/R I2	D/R I3	D/R I4	D/R	D/R	D/R
ALU	ALU	L3 L3 ALU I1	L4 L3 ALU I2	L5 L3 ALU I3	ALU	ALU	ALU
DM	DM	DM	DM I1	DM I2	DM I3	DM	DM
RW	RW	RW	RW	RW I1	RW I2	RW I3	RW

Problem 0

```
add   $1, $2, $3
add   $5, $1, $4
```

● Point of Production

● Point of Consumption

Without bypassing:

```
add $1, $2, $3:    IF   DR   AL   DM   RW
add $5, $1, $4:         IF   DR   DR   DR   AL  DM  RW
```

With bypassing:

```
add $1, $2, $3:    IF   DR   AL   DM   RW
add $5, $1, $4:         IF   DR   AL  DM  RW
```

Problem 1

add $1, $2, $3
lw $4, 8($1)

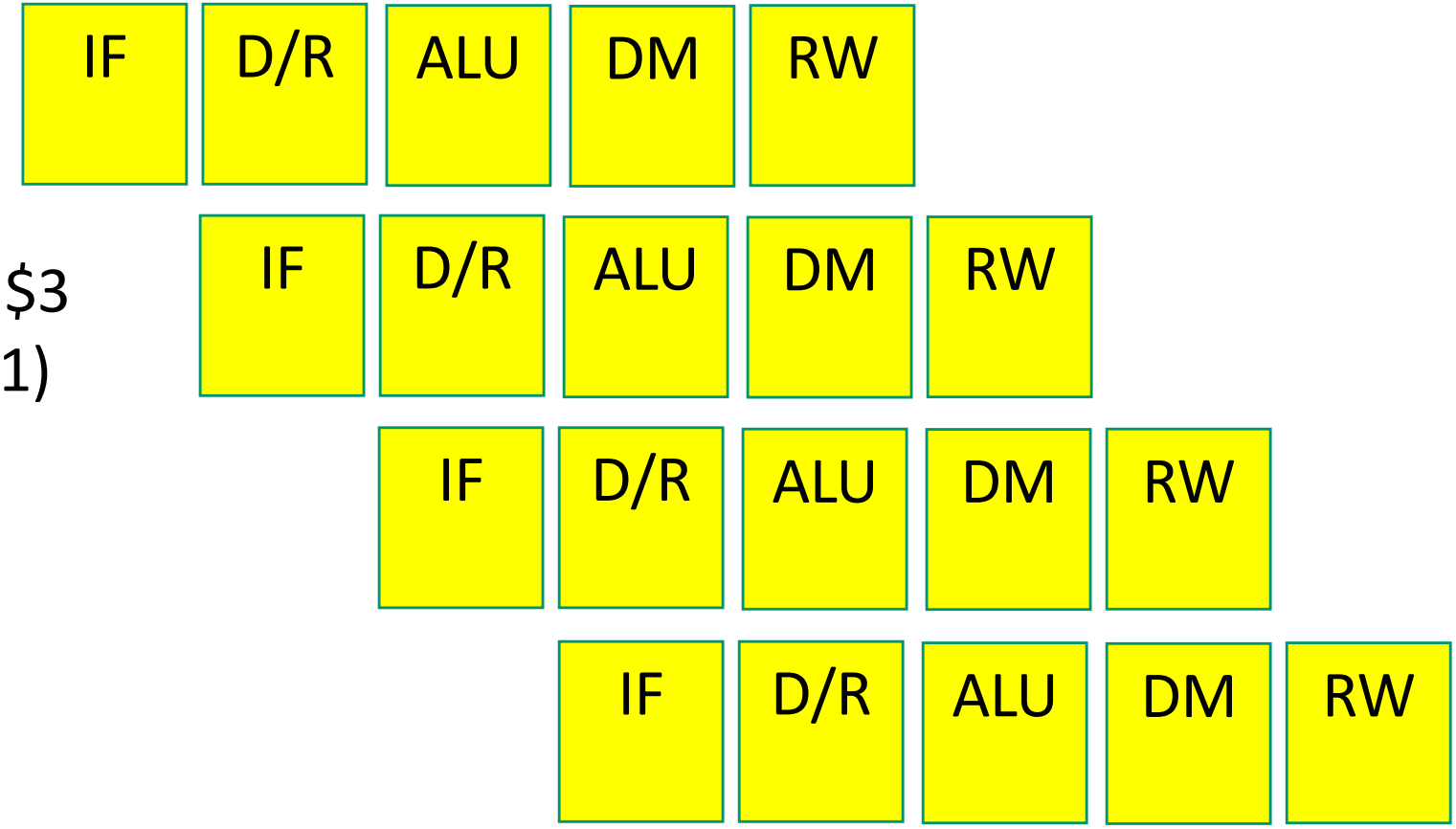

Problem 2

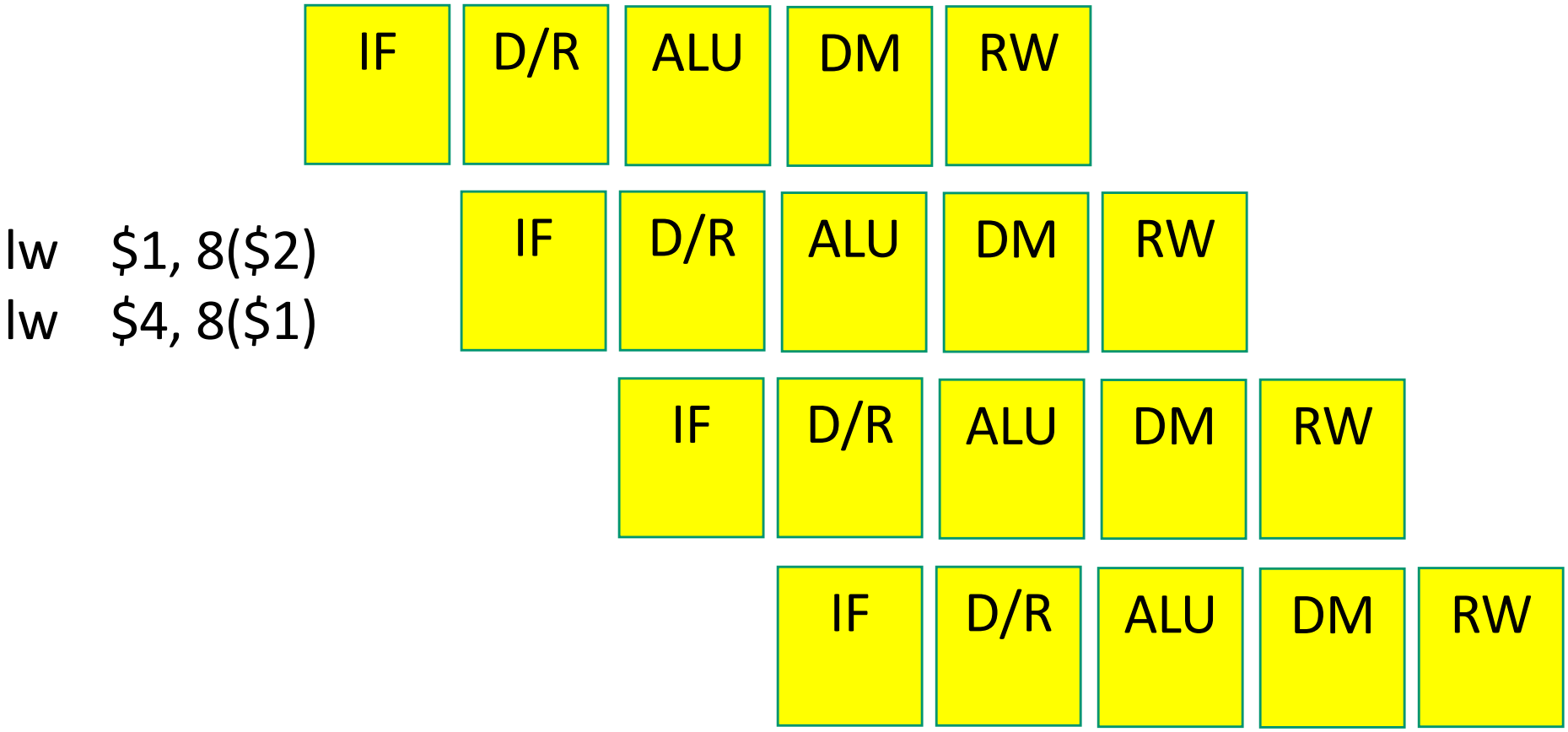
lw $1, 8($2)
lw $4, 8($1)
IF
D/R
ALU
DM
RW
IF
D/R
ALU
DM
RW
IF
D/R
ALU
DM
RW
IF
D/R
ALU
DM
RW

Problem 3

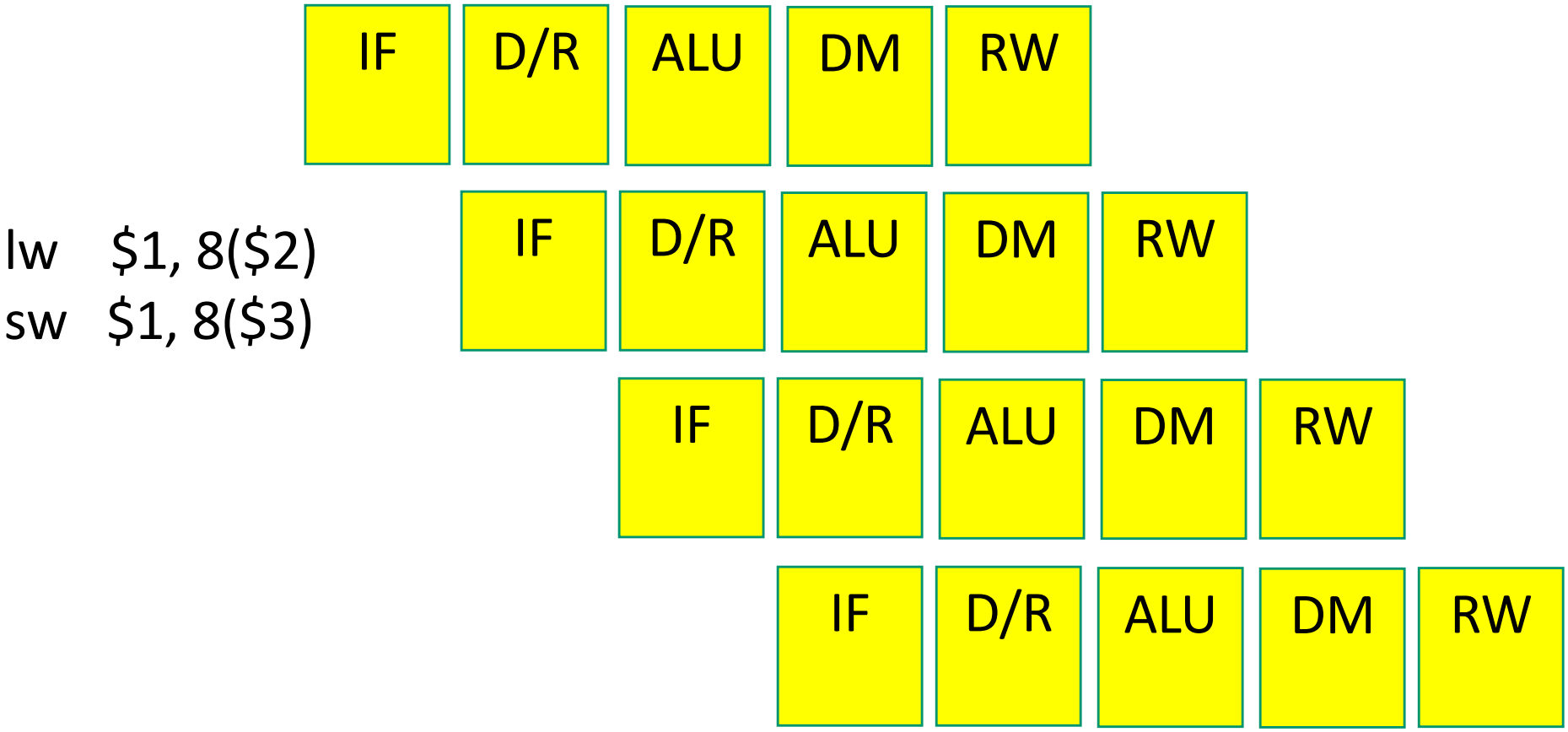
IF D/R ALU DM RW
lw $1, 8($2)
sw $1, 8($3)
IF D/R ALU DM RW
IF D/R ALU DM RW
IF D/R ALU DM RW

Problem 4

A 7 or 9 stage pipeline, RR and RW take an entire stage

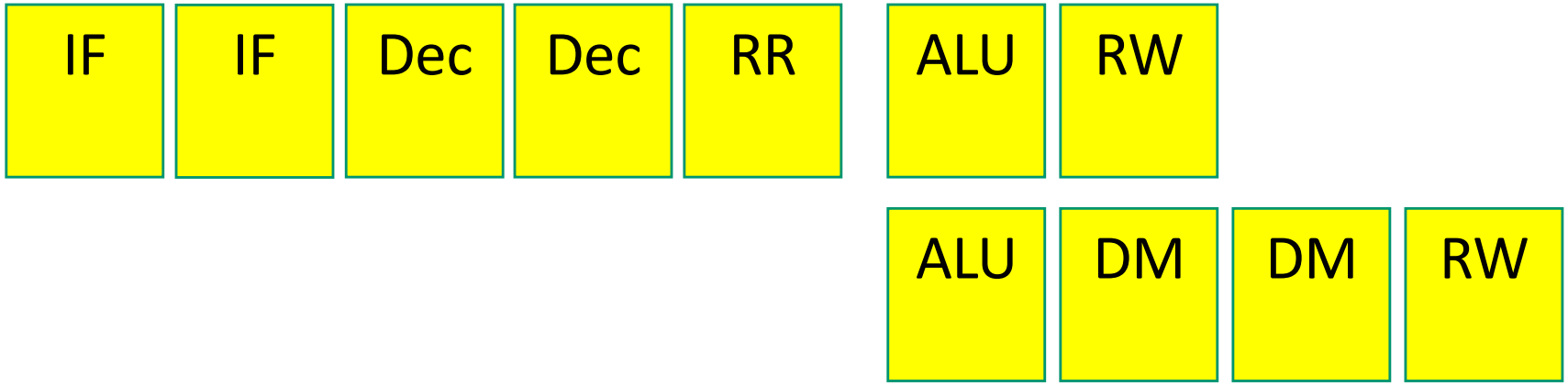

lw $1, 8($2)

add $4, $1, $3

Control Hazards

- Simple techniques to handle control hazard stalls:
  - for every branch, introduce a stall cycle (note: every 6th instruction is a branch!)
  - assume the branch is not taken and start fetching the next instruction – if the branch is taken, need hardware to cancel the effect of the wrong-path instruction
  - fetch the next instruction (branch delay slot) and execute it anyway – if the instruction turns out to be on the correct path, useful work was done – if the instruction turns out to be on the wrong path, hopefully program state is not lost
  - make a smarter guess and fetch instructions from the expected target

Branch Delay Slots

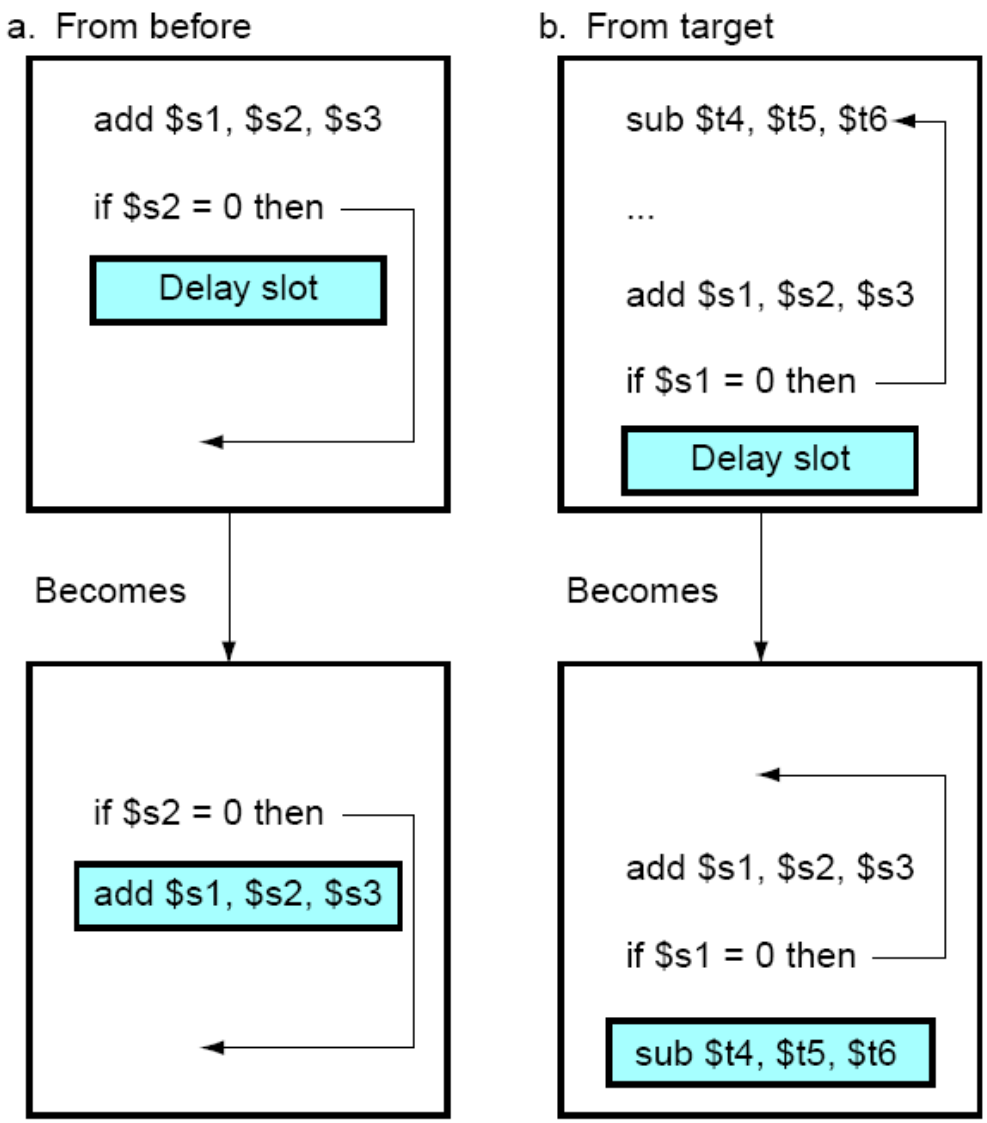

Source: H&P textbook