Computer Arithmetic

Binary Representation

- The binary number

01011000 00010101 00101110 11100111

Most significant bit

Least significant bit

represents the quantity

$0 \times 2^{31} + 1 \times 2^{30} + 0 \times 2^{29} + \ldots + 1 \times 2^{0}$

- A 32-bit word can represent 2^{32} numbers between 0 and $2^{32}-1$

  … this is known as the unsigned representation as we're assuming that numbers are always positive

ASCII vs. Binary

- Does it make more sense to represent a decimal number in ASCII?
- Hardware to implement arithmetic would be difficult
- What are the storage needs? How many bits does it take to represent the decimal number 1,000,000,000 in ASCII and in binary?

ASCII vs. Binary

- Does it make more sense to represent a decimal number in ASCII?

- Hardware to implement arithmetic would be difficult

- What are the storage needs? How many bits does it take to represent the decimal number 1,000,000,000 in ASCII and in binary?

  In binary: 30 bits (2^{30} > 1 billion)

  In ASCII: 10 characters, 8 bits per char = 80 bits

Negative Numbers

32 bits can only represent 2^{32} numbers – if we wish to also represent negative numbers, we can represent 2^{31} positive numbers (incl zero) and 2^{31} negative numbers

$0000\ 0000\ 0000\ 0000\ 0000\ 0000\ 0000\ 0000_{two} = 0_{ten}$
$0000\ 0000\ 0000\ 0000\ 0000\ 0000\ 0000\ 0001_{two} = 1_{ten}$
…
$0111\ 1111\ 1111\ 1111\ 1111\ 1111\ 1111\ 1111_{two} = 2^{31}-1$

$1000\ 0000\ 0000\ 0000\ 0000\ 0000\ 0000\ 0000_{two} = -2^{31}$
$1000\ 0000\ 0000\ 0000\ 0000\ 0000\ 0000\ 0001_{two} = -(2^{31} – 1)$
$1000\ 0000\ 0000\ 0000\ 0000\ 0000\ 0000\ 0010_{two} = -(2^{31} – 2)$
…
$1111\ 1111\ 1111\ 1111\ 1111\ 1111\ 1111\ 1110_{two} = -2$
$1111\ 1111\ 1111\ 1111\ 1111\ 1111\ 1111\ 1111_{two} = -1$

2's Complement

$0000\ 0000\ 0000\ 0000\ 0000\ 0000\ 0000\ 0000_{two} = 0_{ten}$
$0000\ 0000\ 0000\ 0000\ 0000\ 0000\ 0000\ 0001_{two} = 1_{ten}$
…
$0111\ 1111\ 1111\ 1111\ 1111\ 1111\ 1111\ 1111_{two} = 2^{31}-1$

$1000\ 0000\ 0000\ 0000\ 0000\ 0000\ 0000\ 0000_{two} = -2^{31}$
$1000\ 0000\ 0000\ 0000\ 0000\ 0000\ 0000\ 0001_{two} = -(2^{31} - 1)$
$1000\ 0000\ 0000\ 0000\ 0000\ 0000\ 0000\ 0010_{two} = -(2^{31} - 2)$
…
$1111\ 1111\ 1111\ 1111\ 1111\ 1111\ 1111\ 1110_{two} = -2$
$1111\ 1111\ 1111\ 1111\ 1111\ 1111\ 1111\ 1111_{two} = -1$

Why is this representation favorable?

Consider the sum of 1 and -2 …. we get -1

Consider the sum of 2 and -1 …. we get +1

This format can directly undergo addition without any conversions!

Each number represents the quantity

$x_{31}\ -2^{31} + x_{30}\ 2^{30} + x_{29}\ 2^{29} + \ldots + x_1\ 2^1 + x_0\ 2^0$

2's Complement

$0000\ 0000\ 0000\ 0000\ 0000\ 0000\ 0000\ 0000_{two} = 0_{ten}$
$0000\ 0000\ 0000\ 0000\ 0000\ 0000\ 0000\ 0001_{two} = 1_{ten}$
…
$0111\ 1111\ 1111\ 1111\ 1111\ 1111\ 1111\ 1111_{two} = 2^{31}-1$

$1000\ 0000\ 0000\ 0000\ 0000\ 0000\ 0000\ 0000_{two} = -2^{31}$
$1000\ 0000\ 0000\ 0000\ 0000\ 0000\ 0000\ 0001_{two} = -(2^{31} – 1)$
$1000\ 0000\ 0000\ 0000\ 0000\ 0000\ 0000\ 0010_{two} = -(2^{31} – 2)$
…
$1111\ 1111\ 1111\ 1111\ 1111\ 1111\ 1111\ 1110_{two} = -2$
$1111\ 1111\ 1111\ 1111\ 1111\ 1111\ 1111\ 1111_{two} = -1$

Note that the sum of a number x and its inverted representation x' always equals a string of 1s (-1).

$x + x' = -1$

$x' + 1 = -x$ … hence, can compute the negative of a number by

$-x = x' + 1$ inverting all bits and adding 1

Similarly, the sum of x and –x gives us all zeroes, with a carry of 1

In reality, $x + (-x) = 2^n$ … hence the name 2's complement

Example

- Compute the 32-bit 2's complement representations for the following decimal numbers:

  5, -5, -6

Example

- Compute the 32-bit 2's complement representations for the following decimal numbers:
  5, -5, -6

5:	0000	0000	0000	0000	0000	0000	0000	0101
-5:	1111	1111	1111	1111	1111	1111	1111	1011
-6:	1111	1111	1111	1111	1111	1111	1111	1010

Given -5, verify that inverting and adding 1 yields the number 5

Signed / Unsigned

- The hardware recognizes two formats:

  unsigned (corresponding to the C declaration unsigned int)
  -- all numbers are positive, a 1 in the most significant bit just means it is a really large number

  signed (C declaration is signed int or just int)
  -- numbers can be +/- , a 1 in the MSB means the number is negative

This distinction enables us to represent twice as many numbers when we're sure that we don't need negatives

MIPS Instructions

Consider a comparison instruction:

```
slt   $t0, $t1, $zero
```

and $t1 contains the 32-bit number 1111 01…01

What gets stored in $t0?

MIPS Instructions

Consider a comparison instruction:

```
slt   $t0, $t1, $zero
```

and $t1 contains the 32-bit number 1111 01…01

What gets stored in $t0?

The result depends on whether $t1 is a signed or unsigned number – the compiler/programmer must track this and accordingly use either slt or sltu

```
slt   $t0, $t1, $zero    stores  1 in $t0
sltu  $t0, $t1, $zero    stores  0 in $t0
```

Sign Extension

- Occasionally, 16-bit signed numbers must be converted into 32-bit signed numbers – for example, when doing an add with an immediate operand

- The conversion is simple: take the most significant bit and use it to fill up the additional bits on the left – known as sign extension

So 2_{10} goes from 0000 0000 0000 0010 to
0000 0000 0000 0000 0000 0000 0000 0010

and -2_{10} goes from 1111 1111 1111 1110 to
1111 1111 1111 1111 1111 1111 1111 1110

Alternative Representations

- The following two (intuitive) representations were discarded because they required additional conversion steps before arithmetic could be performed on the numbers
  - sign-and-magnitude: the most significant bit represents +/- and the remaining bits express the magnitude
  - one's complement: -x is represented by inverting all the bits of x

  Both representations above suffer from two zeroes

Addition, Multiplication & Division

Addition and Subtraction

- Addition is similar to decimal arithmetic
- For subtraction, simply add the negative number – hence, subtract A-B involves negating B's bits, adding 1 and A

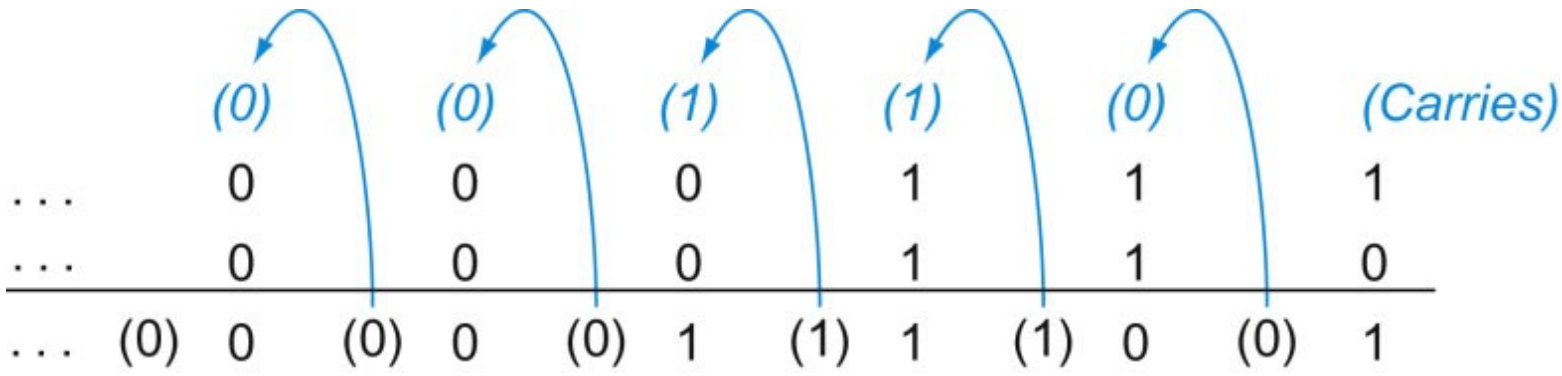

Source: H&P textbook

Overflows

- For an unsigned number, overflow happens when the last carry (1) cannot be accommodated

- For a signed number, overflow happens when the most significant bit is not the same as every bit to its left
  - when the sum of two positive numbers is a negative result
  - when the sum of two negative numbers is a positive result
  - The sum of a positive and negative number will never overflow

- MIPS allows addu and subu instructions that work with unsigned integers and never flag an overflow – to detect the overflow, other instructions will have to be executed

Multiplication Example

```
Multiplicand          1000ten
Multiplier          x 1001ten
                  ---------------
                      1000
                     0000
                    0000
                   1000
                 ----------------
Product            1001000ten
```

In every step

- multiplicand is shifted
- next bit of multiplier is examined (also a shifting step)
- if this bit is 1, shifted multiplicand is added to the product

HW Algorithm 1

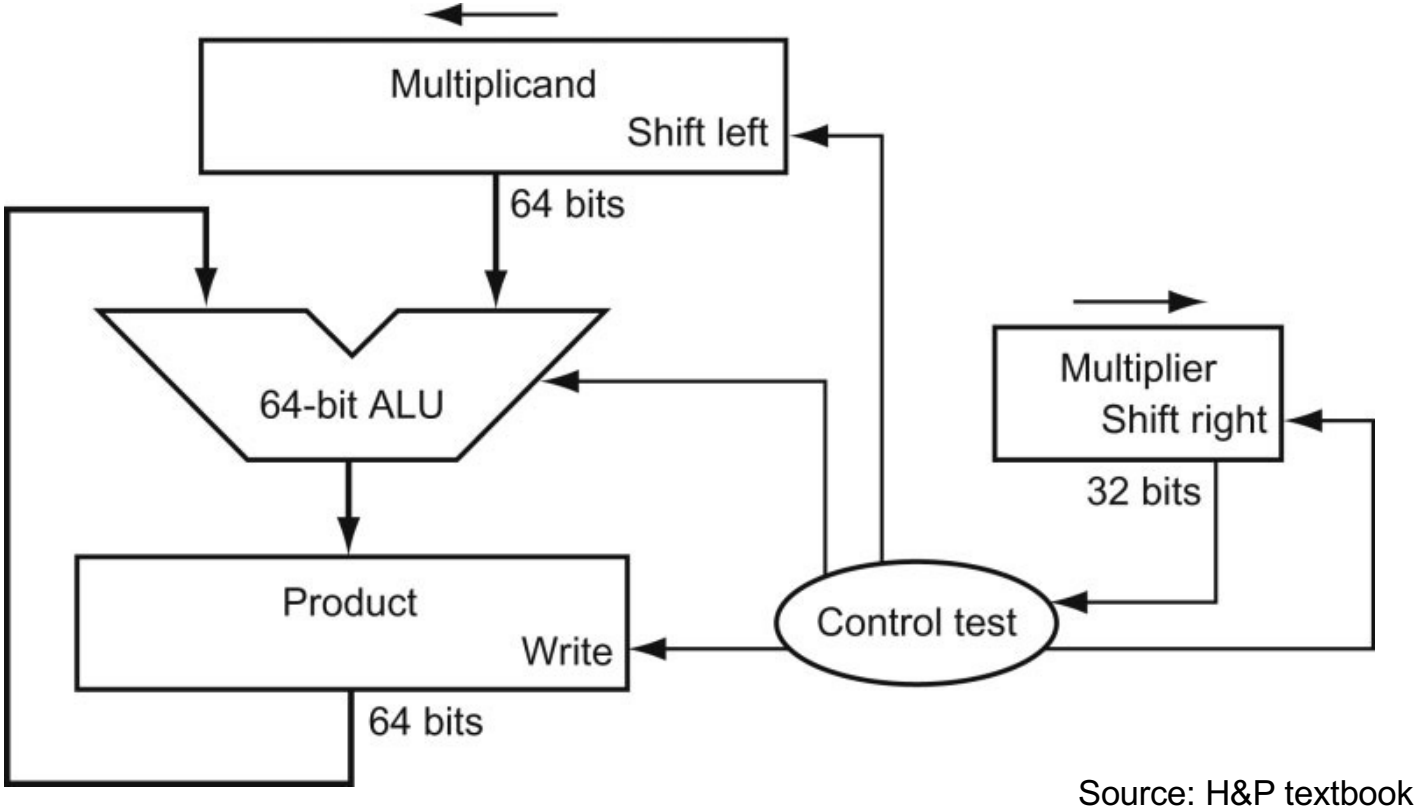

Source: H&P textbook

In every step

- multiplicand is shifted
- next bit of multiplier is examined (also a shifting step)
- if this bit is 1, shifted multiplicand is added to the product

HW Algorithm 2

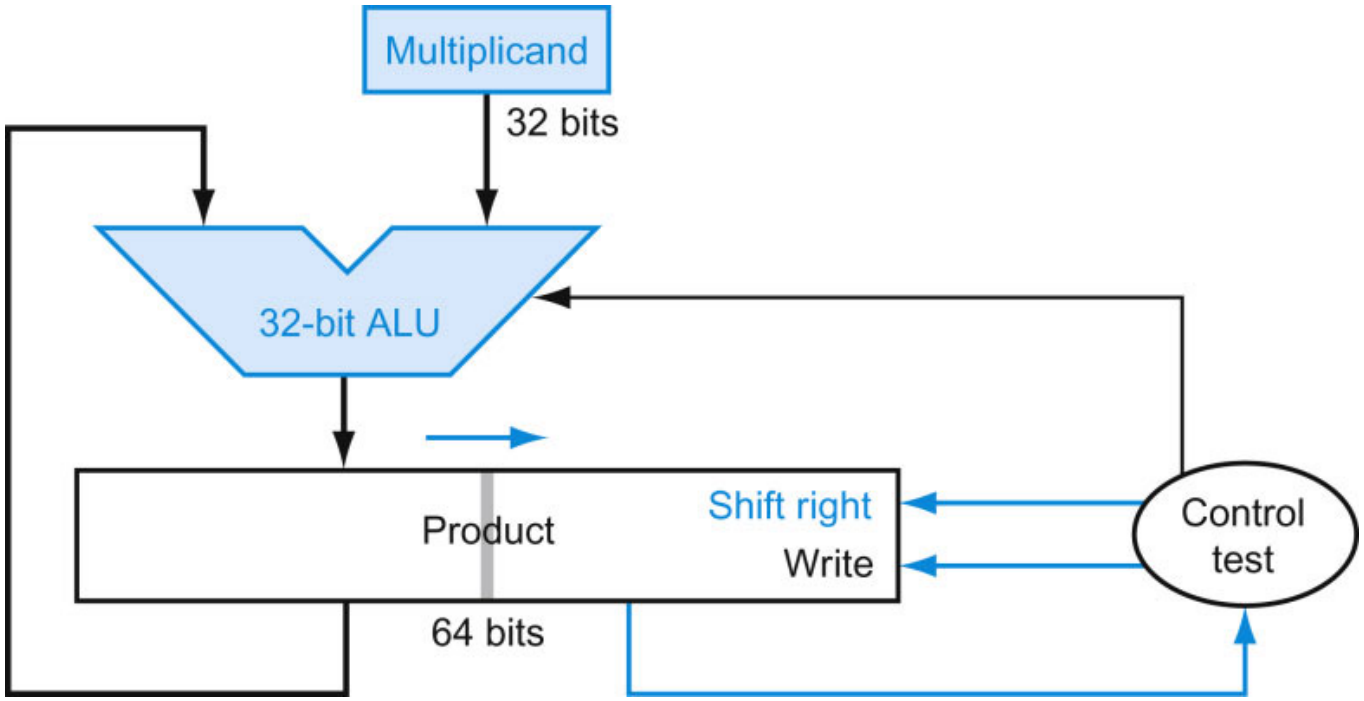

Source: H&P textbook

- 32-bit ALU and multiplicand is untouched
- the sum keeps shifting right
- at every step, number of bits in product + multiplier = 64, hence, they share a single 64-bit register

Notes

- The previous algorithm also works for signed numbers (negative numbers in 2's complement form)

- We can also convert negative numbers to positive, multiply the magnitudes, and convert to negative if signs disagree

- The product of two 32-bit numbers can be a 64-bit number -- hence, in MIPS, the product is saved in two 32-bit registers

MIPS Instructions

mult	$s2, $s3	computes the product and stores it in two "internal" registers that can be referred to as hi and lo
mfhi	$s0	moves the value in hi into $s0
mflo	$s1	moves the value in lo into $s1

Similarly for multu

Fast Algorithm

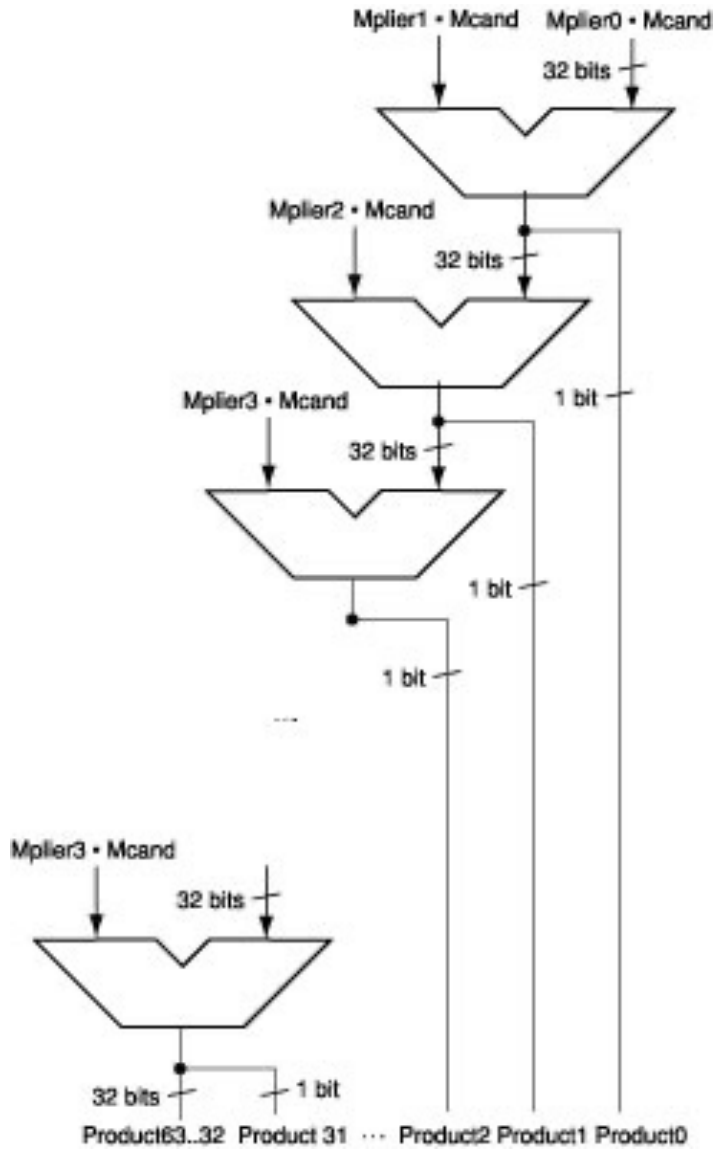

- The previous algorithm requires a clock to ensure that the earlier addition has completed before shifting

- This algorithm can quickly set up most inputs – it then has to wait for the result of each add to propagate down – faster because no clock is involved

  -- Note: high transistor cost

Source: H&P textbook

Division

			1001_{ten}	Quotient
Divisor	1000_{ten}	|	1001010_{ten}	Dividend
			-1000	
			10	
			101	
			1010	
			-1000	
			10_{ten}	Remainder

At every step,

- shift divisor right and compare it with current dividend
- if divisor is larger, shift 0 as the next bit of the quotient
- if divisor is smaller, subtract to get new dividend and shift 1 as the next bit of the quotient

Division

1001_{ten} Quotient

Divisor 1000_{ten} | 1001010_{ten} Dividend

0001001010	0001001010	0000001010	0000001010
100000000000 →	0001000000 →	0000100000 →	0000001000
Quo: 0	000001	0000010	000001001

At every step,

- shift divisor right and compare it with current dividend
- if divisor is larger, shift 0 as the next bit of the quotient
- if divisor is smaller, subtract to get new dividend and shift 1 as the next bit of the quotient

Divide Example

- Divide 7_{ten} ($0000\ 0111_{two}$) by 2_{ten} (0010_{two})

Iter	Step	Quot	Divisor	Remainder
0	Initial values			
1				
2				
3				
4				
5				

Divide Example

- Divide 7_{ten} ($0000\ 0111_{two}$) by 2_{ten} (0010_{two})

Iter	Step	Quot	Divisor	Remainder
0	Initial values	0000	0010 0000	0000 0111
1	Rem = Rem – Div	0000	0010 0000	1110 0111
	Rem < 0 ➔ +Div, shift 0 into Q	0000	0010 0000	0000 0111
	Shift Div right	0000	0001 0000	0000 0111
2	Same steps as 1	0000	0001 0000	1111 0111
		0000	0001 0000	0000 0111
		0000	0000 1000	0000 0111
3	Same steps as 1	0000	0000 0100	0000 0111
4	Rem = Rem – Div	0000	0000 0100	0000 0011
	Rem >= 0 ➔ shift 1 into Q	0001	0000 0100	0000 0011
	Shift Div right	0001	0000 0010	0000 0011
5	Same steps as 4	0011	0000 0001	0000 0001

Hardware for Division

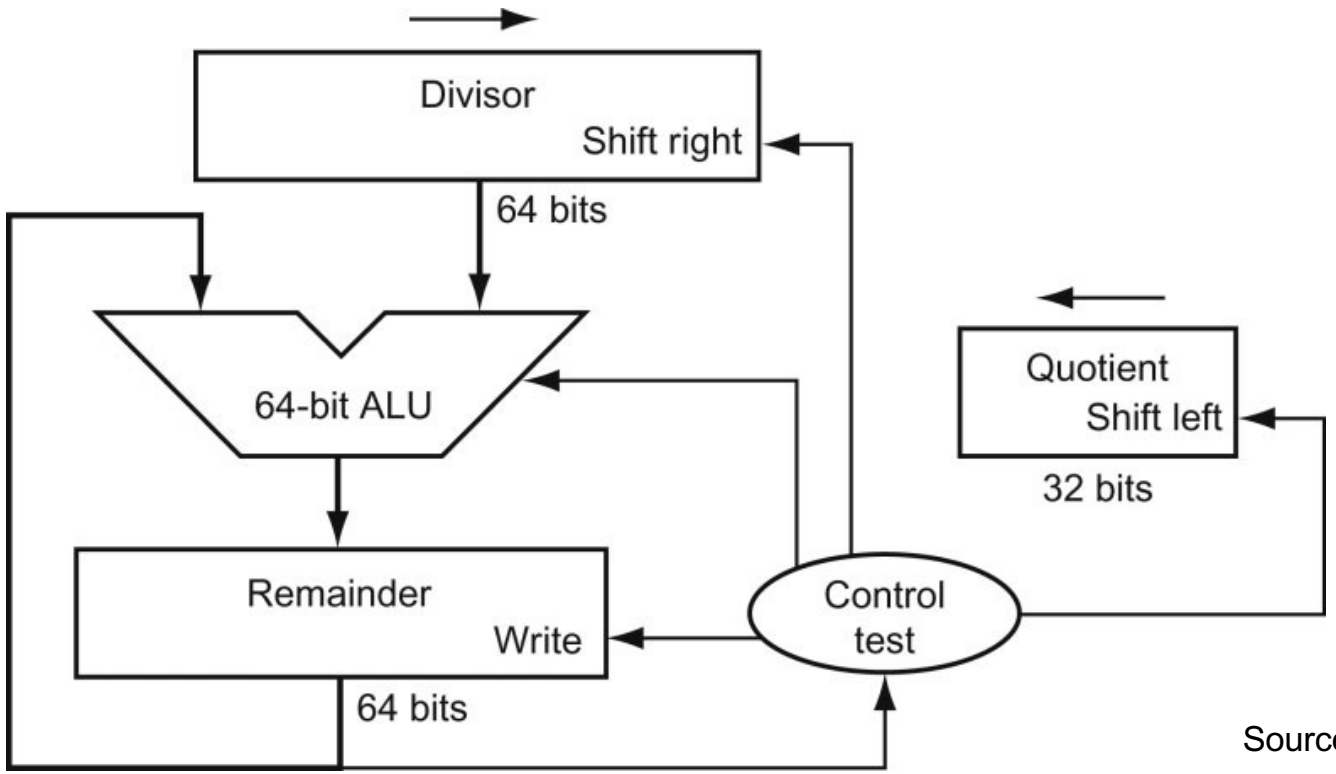

Source: H&P textbook

A comparison requires a subtract; the sign of the result is examined; if the result is negative, the divisor must be added back

Similar to multiply, results are placed in Hi (remainder) and Lo (quotient)

Efficient Division

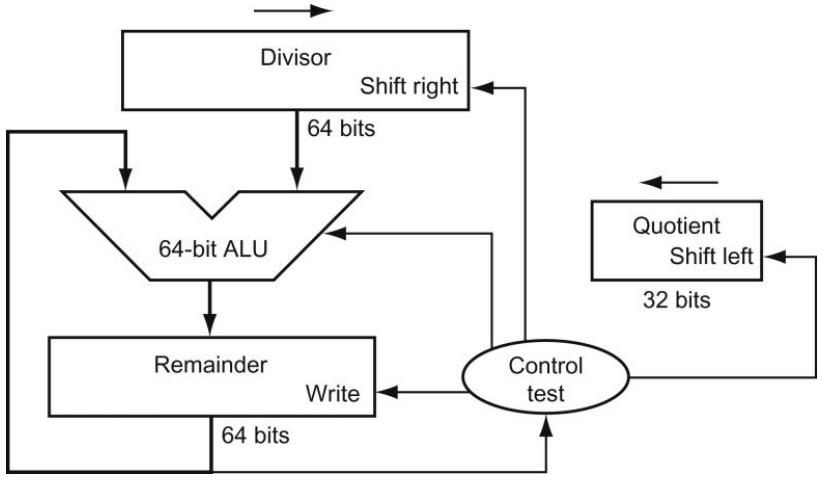

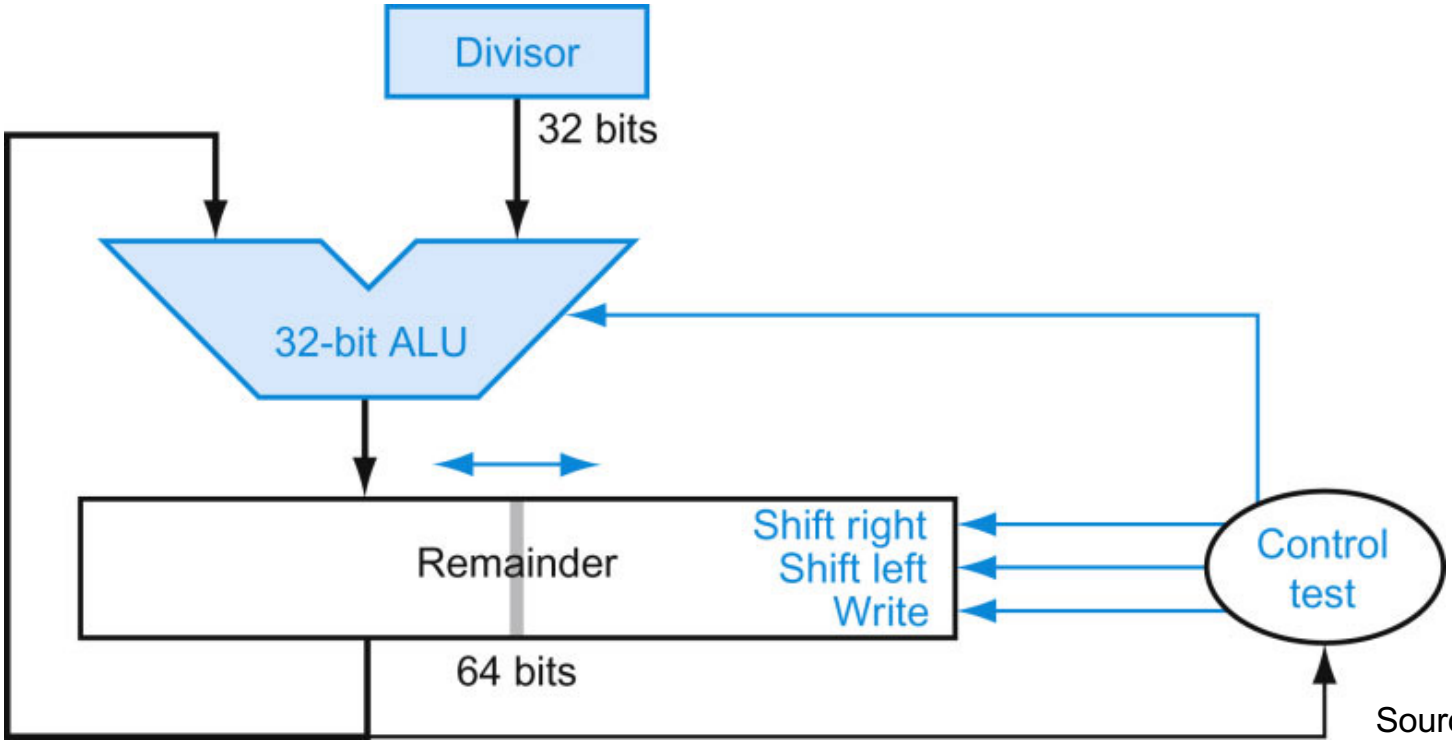

Source: H&P textbook

Divisions involving Negatives

- Simplest solution: convert to positive and adjust sign later

- Note that multiple solutions exist for the equation:
  Dividend = Quotient x Divisor + Remainder

+7	div	+2	Quo =	Rem =
-7	div	+2	Quo =	Rem =
+7	div	-2	Quo =	Rem =
-7	div	-2	Quo =	Rem =

Divisions involving Negatives

- Simplest solution: convert to positive and adjust sign later

- Note that multiple solutions exist for the equation:
  Dividend = Quotient x Divisor + Remainder

+7	div	+2	Quo = +3	Rem = +1
-7	div	+2	Quo = -3	Rem = -1
+7	div	-2	Quo = -3	Rem = +1
-7	div	-2	Quo = +3	Rem = -1

Convention: Dividend and remainder have the same sign
Quotient is negative if signs disagree
These rules fulfil the equation above