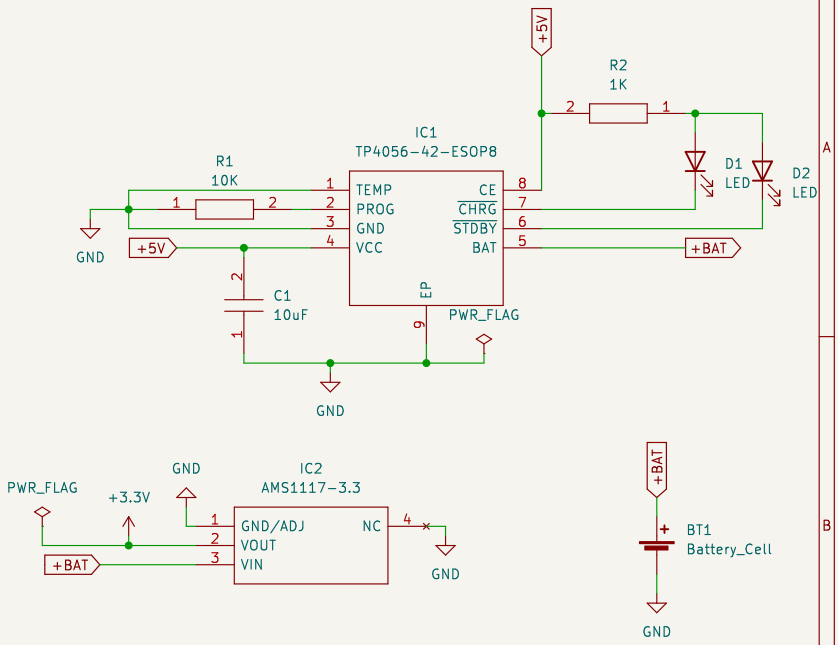

Design: Chauke Oscar
Student Number: CHKKHA006
GROUP 30
Engineering Design

Sheet: /
File: HAT-STM32.kicad_sch

Title: POWER MODULE

Size: A5	Date: 2022-03-08	**Rev: v2**
KiCad E.D.A. kicad (6.0.2)		Id: 1/1