SYS_5V

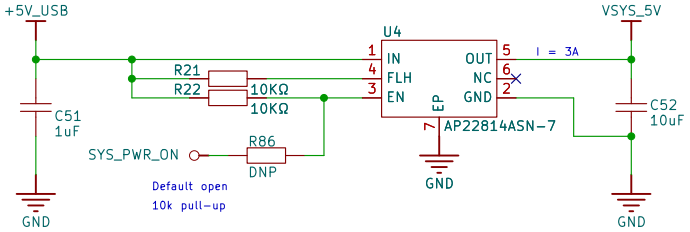

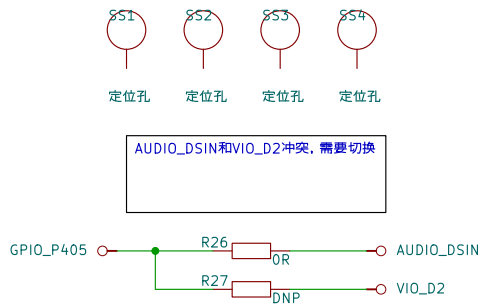

BUCK_3V3

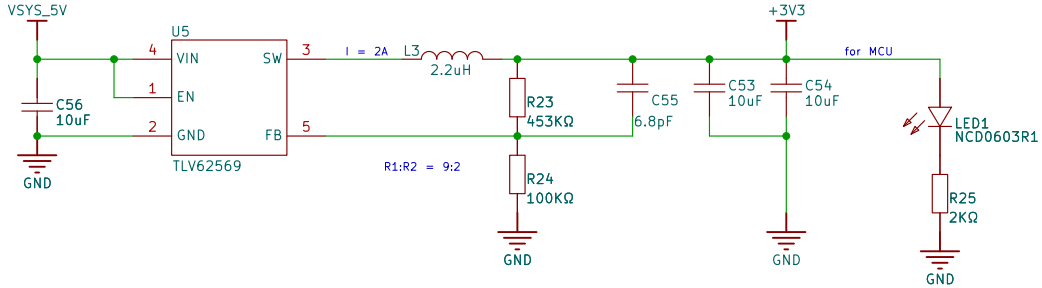

LDO_1V8

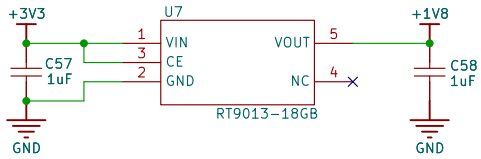

LDO_3V3

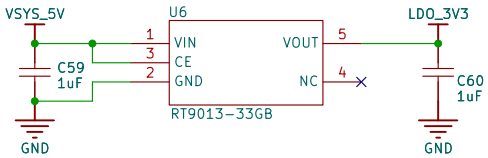

Titan Mini

Author：MikeZhang
https://www.rt-thread.org/

Sheet: /
File: POWER.kicad_sch

Title: POWER

Size: A4	Date: 2026-03-26	Rev: HW:V1.0
KiCad E.D.A. 10.0.0		Id: 1/13

MIPI&USB

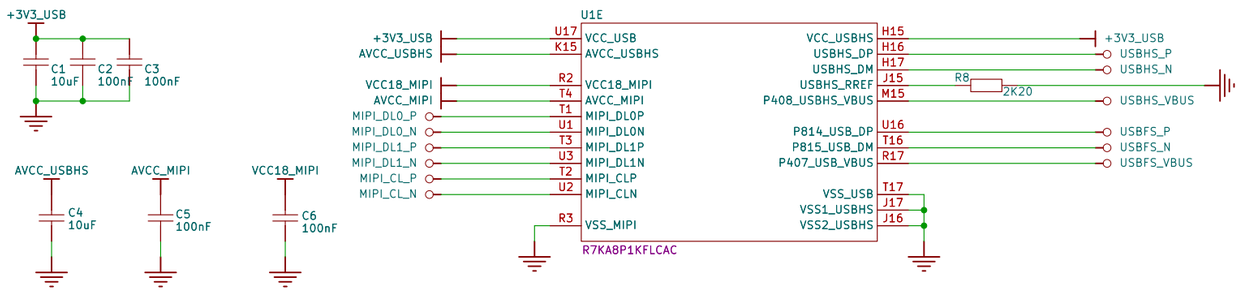

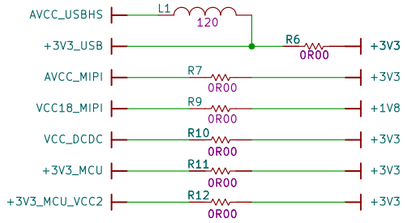

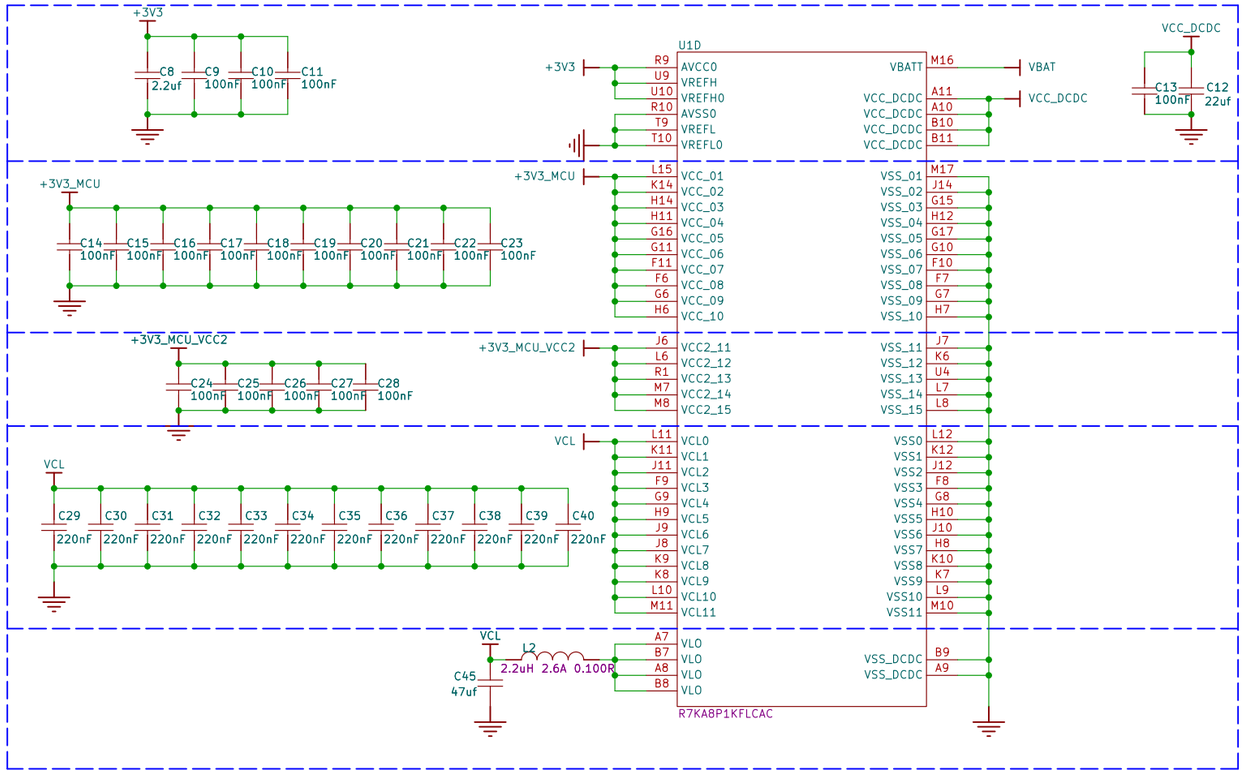

RTC_BAT

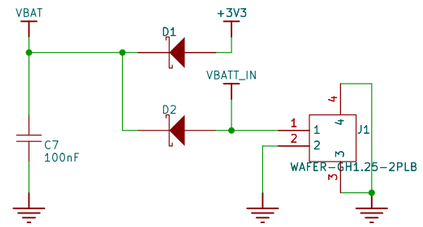

晶振

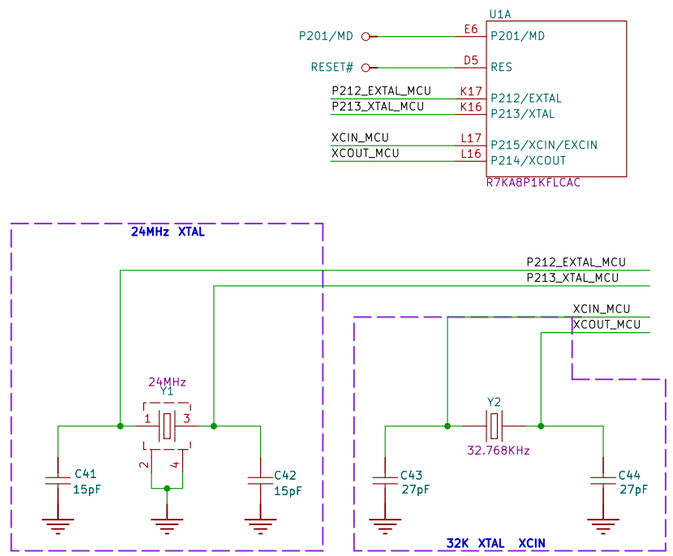

Titan Mini

Author：MikeZhang
https://www.rt-thread.org/

Sheet: /
File: MCU_PWR.kicad_sch

Title: MCU_PWR

Size: A3	Date: 2026-03-26	Rev: HW:V1.0
KiCad E.D.A. 10.0.0		Id: 2/13

MCU_PORTS

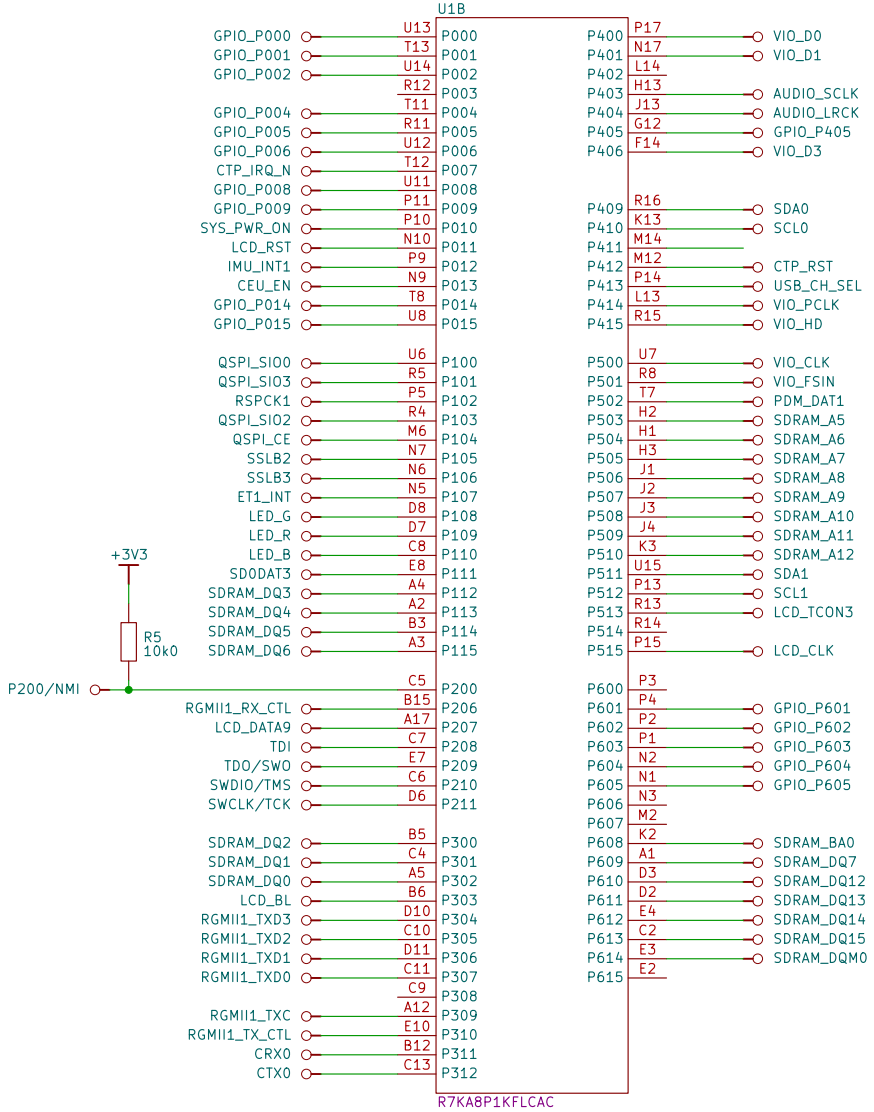

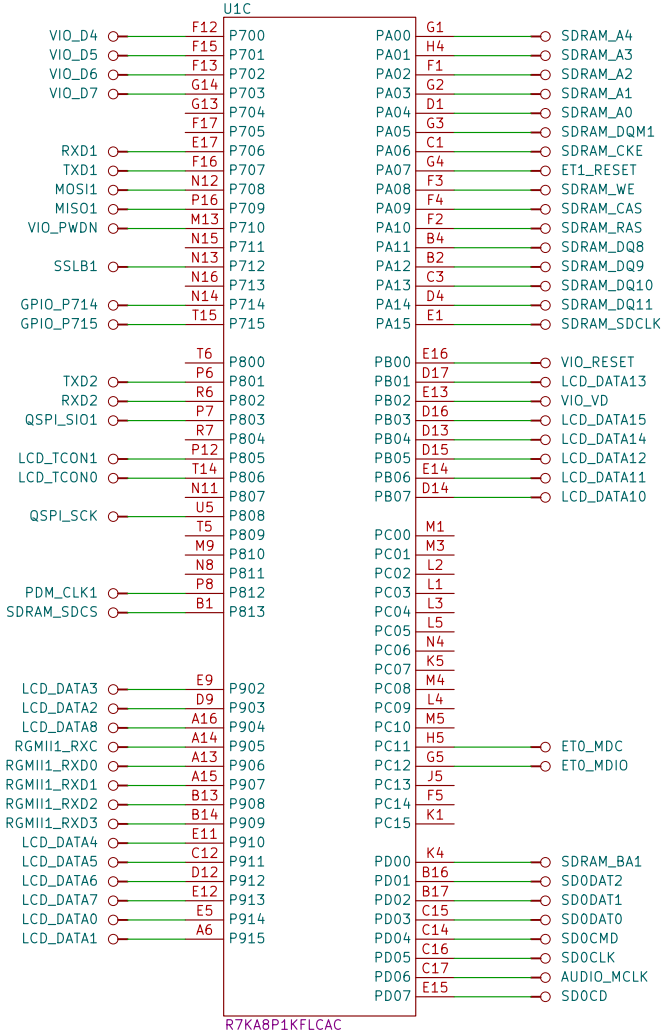

I2C上拉电阻

Titan Mini

Author：MikeZhang
https://www.rt-thread.org/

Sheet: /
File: MCU_PORTS.kicad_sch

Title: MCU_PORTS

Size: A4	Date: 2026-03-26	Rev: HW:V1.0
KiCad E.D.A. 10.0.0		Id: 3/13

SDRAM

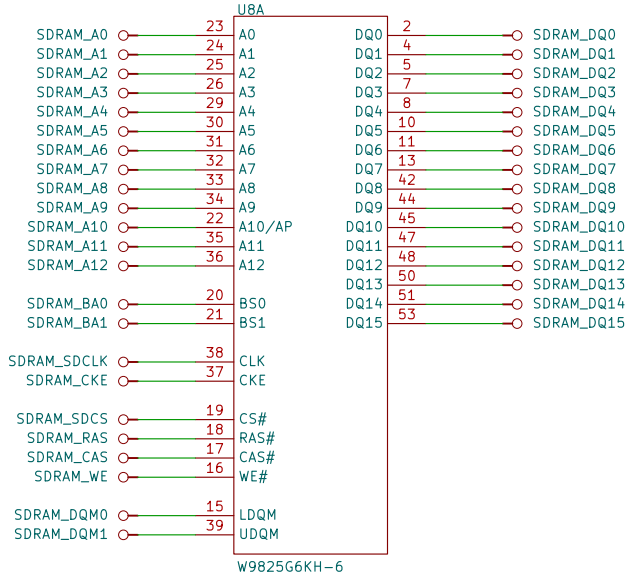

layout：SDRAM走线控单端50ohm 等长

SDRAM_PWR

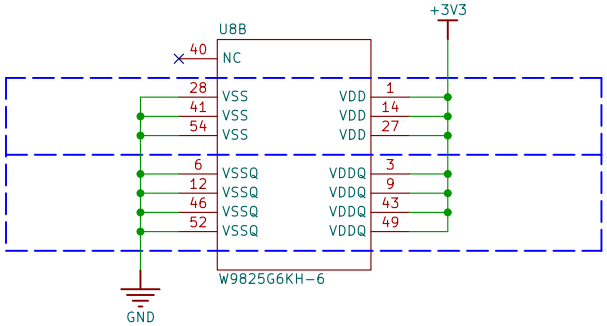

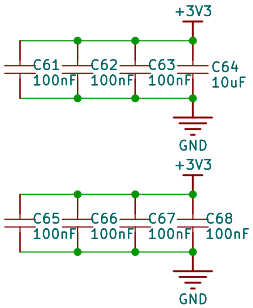

Titan Mini

Author：MikeZhang
https://www.rt-thread.org/

Sheet: /
File: SDRAM.kicad_sch

Title: SDRAM

Size: A4	Date: 2026-03-26	Rev: HW:V1.0
KiCad E.D.A. 10.0.0		Id: 4/13

HS/FS SWITCH

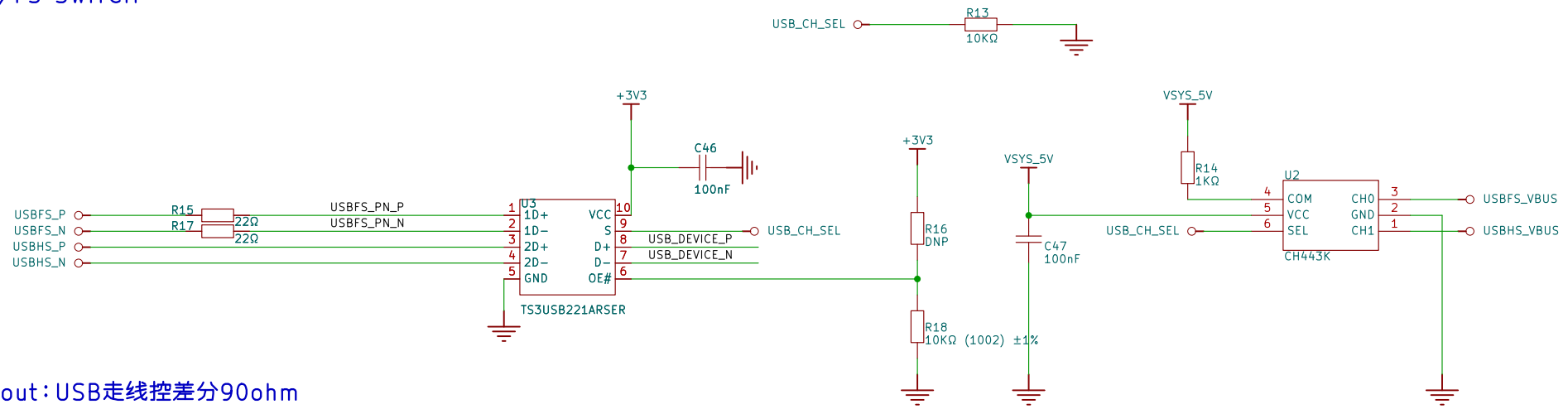

layout：USB走线控差分90ohm

USB DEVICE HS/FS

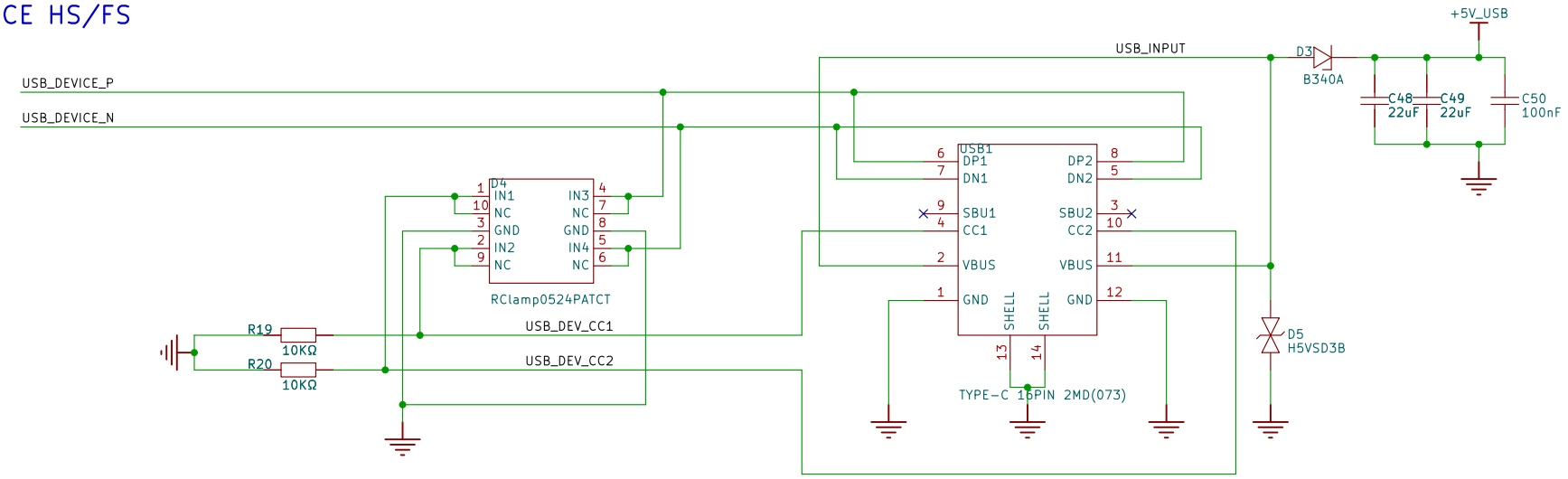

Titan Mini

Author：MikeZhang
https://www.rt-thread.org/

Sheet: /
File: USB_DEV.kicad_sch

Title: USB_DEV

Size: A4	Date: 2026-03-26	Rev: HW:V1.0
KiCad E.D.A. 10.0.0		Id: 5/13

RGB565

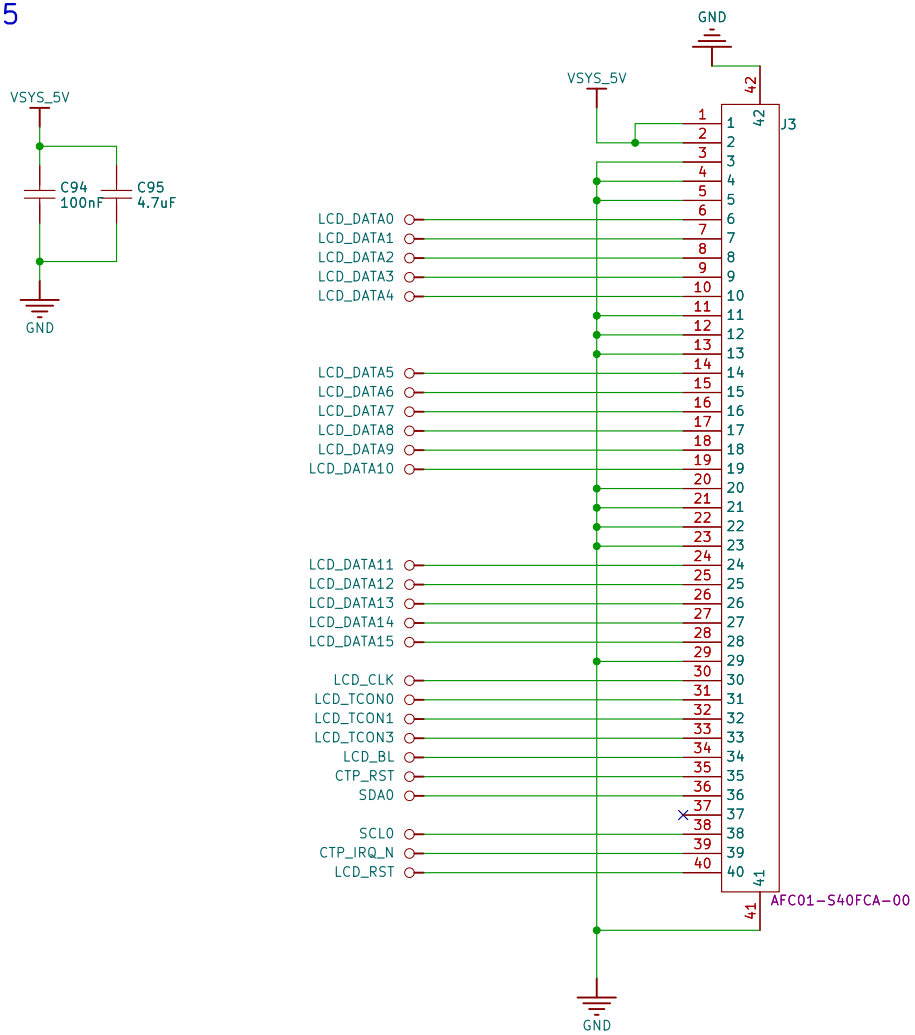

Titan Mini

Author : MikeZhang
https://www.rt-thread.org/

Sheet: /
File: ra8p1-mini_v1.0.kicad_sch

Title: RGB_LCD

Size: A4	Date: 2026-03-26	Rev: HW:V1.0
KiCad E.D.A. 10.0.0		Id: 6/13

PDM MICS

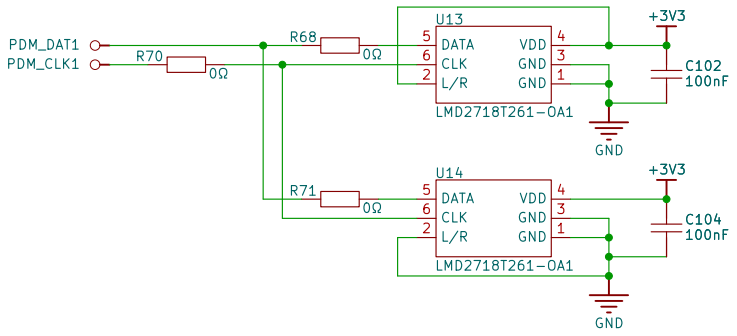

SPEAKER

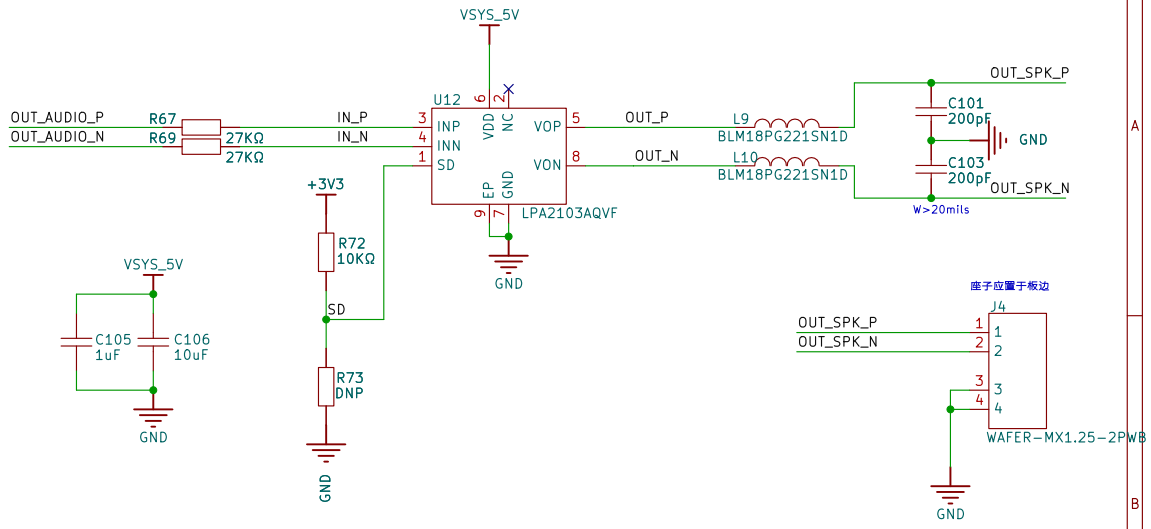

layout：模拟输出端类差分走线

ES8156

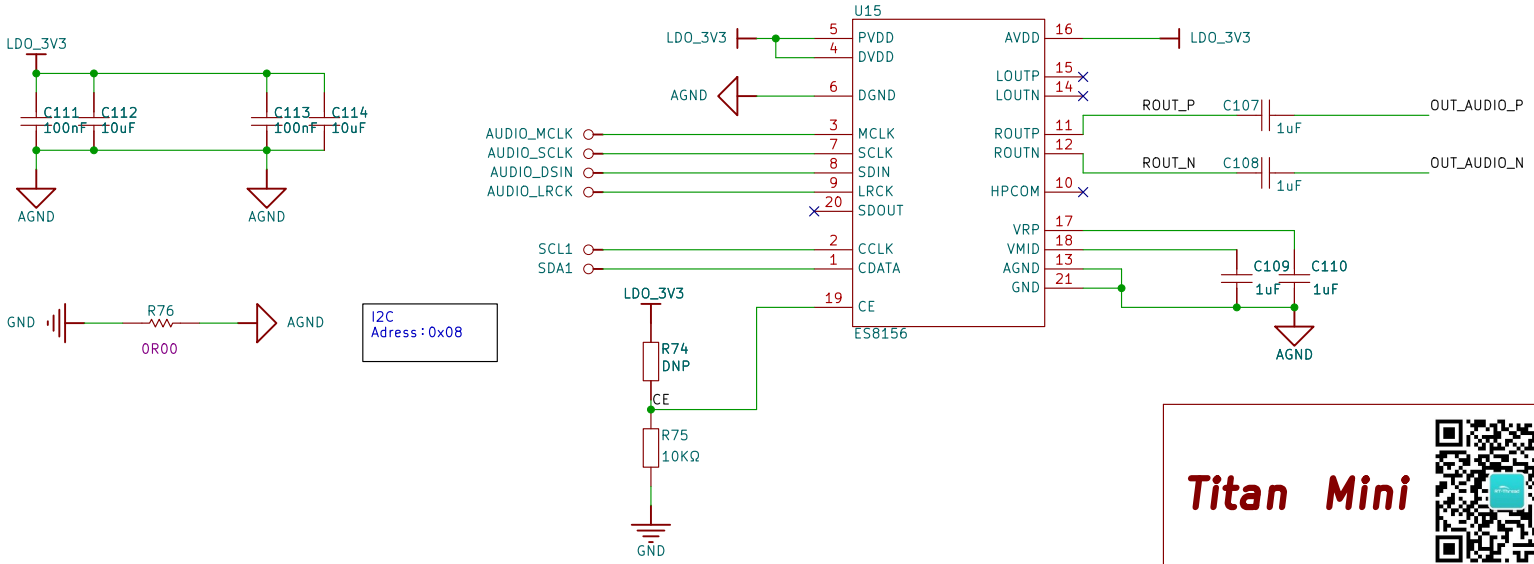

Titan Mini

Author：MikeZhang
https://www.rt-thread.org/

Sheet: /
File: AUDIO.kicad_sch

Title: AUDIO

Size: A4	Date: 2026-03-26	Rev: HW:V1.0
KiCad E.D.A. 10.0.0		Id: 7/13

BTB

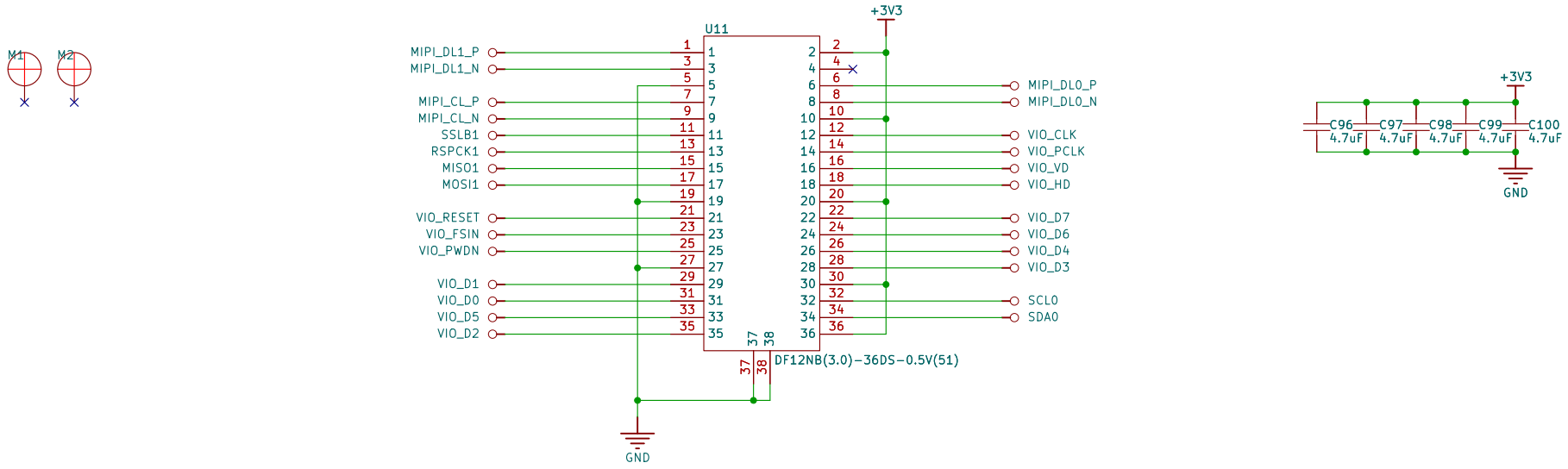

Titan Mini

Author : MikeZhang
https://www.rt-thread.org/

Sheet: /
File: CAMERA.kicad_sch

Title: CAMERA

Size: A4	Date: 2026-03-26	Rev: HW:V1.0
KiCad E.D.A. 10.0.0		Id: 8/13

Gigabit Ethernet

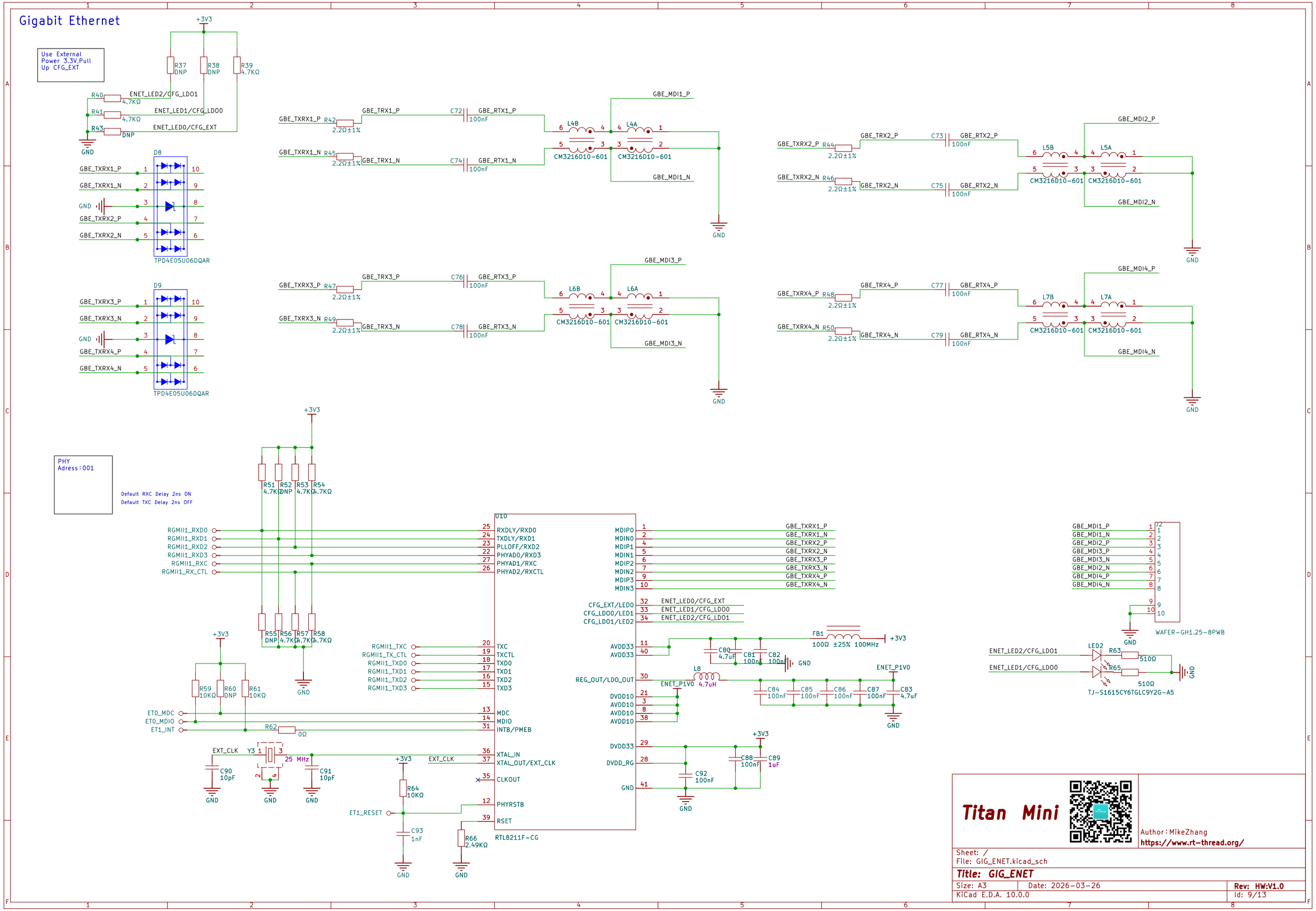

Titan Mini

Author:MikeZhang
https://www.rt-thread.org/

Sheet: /
File: GIG_ENET.kicad_sch

Title: GIG_ENET

Size: A3	Date: 2026-03-26	Rev: HW:V1.0
KiCad E.D.A. 10.0.0		Id: 9/13

IMU

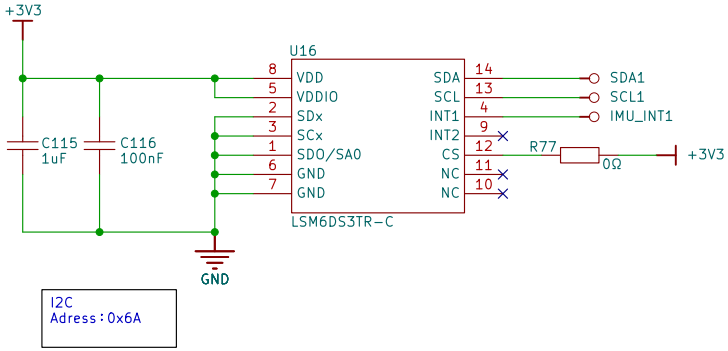

Titan Mini

Author:MikeZhang
https://www.rt-thread.org/

Sheet: /
File: IMU.kicad_sch

Title: IMU

Size: A4	Date: 2026-03-26	Rev: HW:V1.0
KiCad E.D.A. 10.0.0		Id: 10/13

QSPI_FLASH

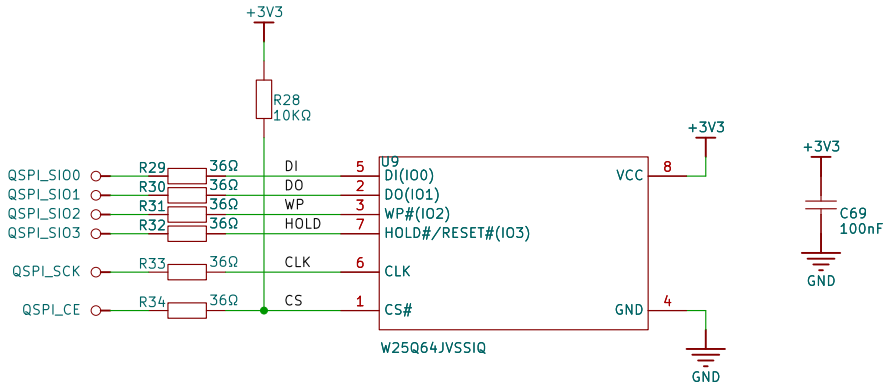

SDCARD

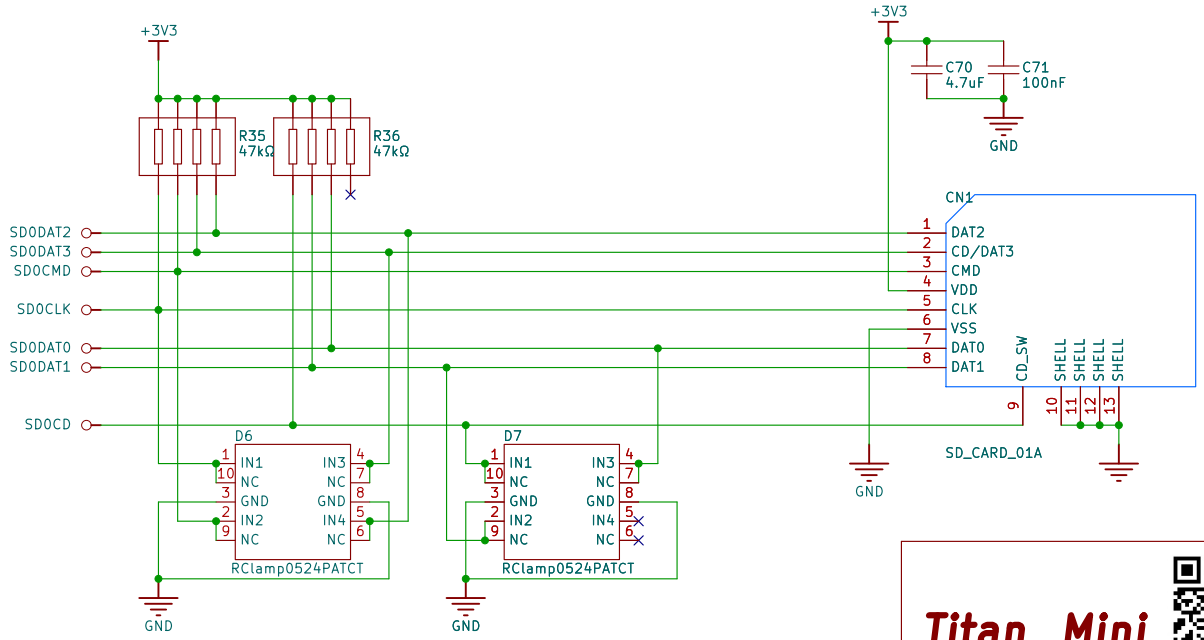

Titan Mini

Author : MikeZhang
https://www.rt-thread.org/

Sheet: /
File: MEMORY.kicad_sch

Title: MEMORY

Size: A4	Date: 2026-03-26	Rev: HW:V1.0
KiCad E.D.A. 10.0.0		Id: 11/13

CAN

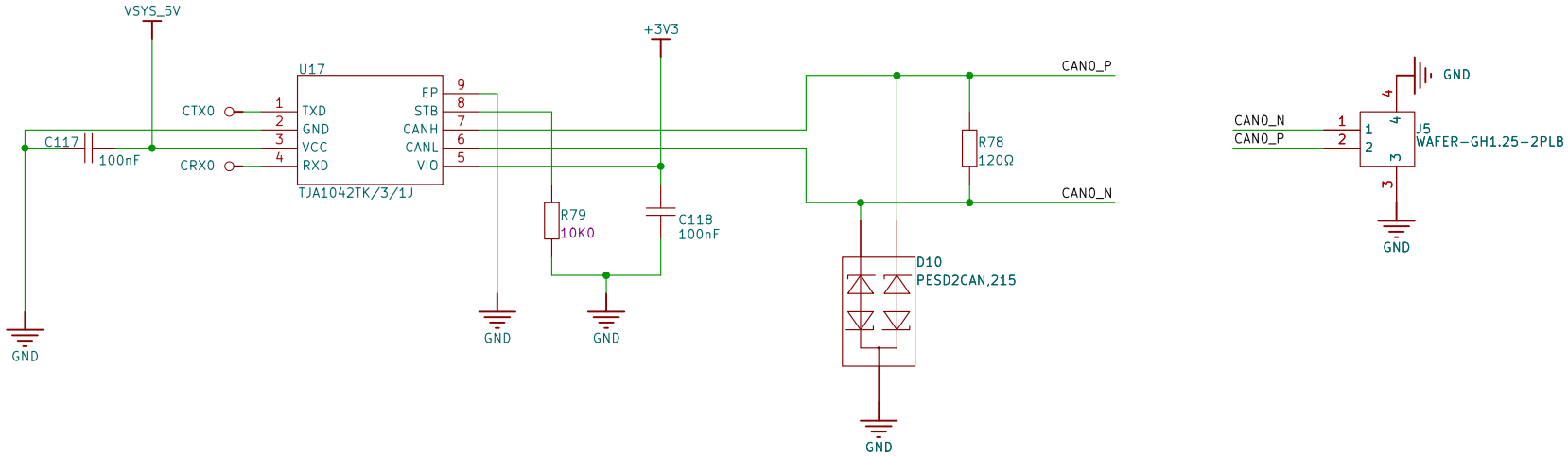

layout：CAN类差分走线

Titan Mini

Author：MikeZhang
https://www.rt-thread.org/

Sheet: /
File: CAN.kicad_sch

Title: CAN

Size: A4	Date: 2026-03-26	Rev: HW:V1.0
KiCad E.D.A. 10.0.0		Id: 12/13

Raspberry

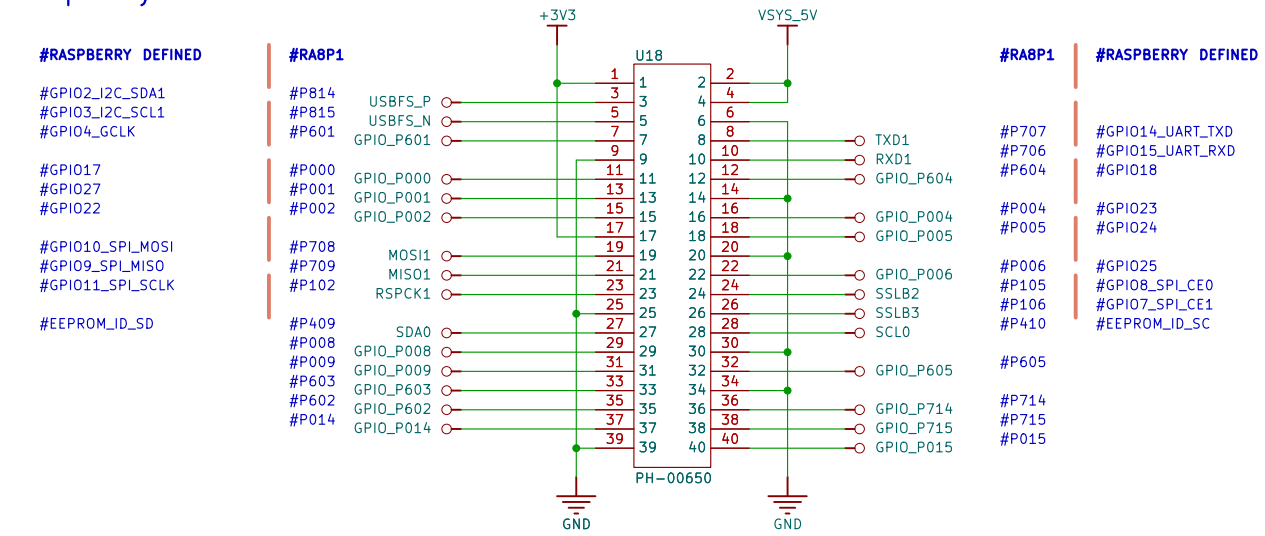

USER LEDS

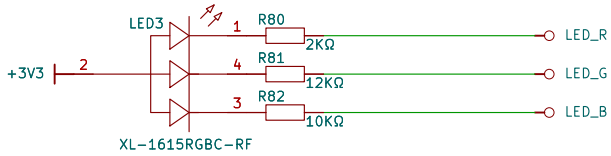

JTAG INTERFACE

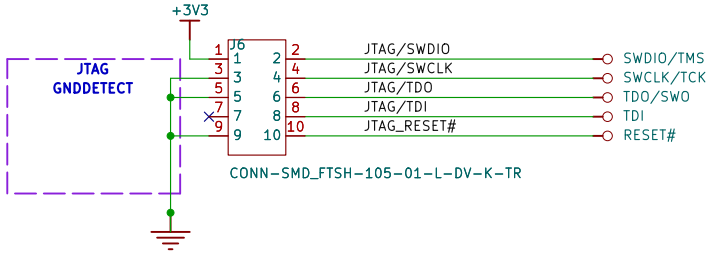

UART

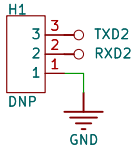

USER/BOOT BUTTON

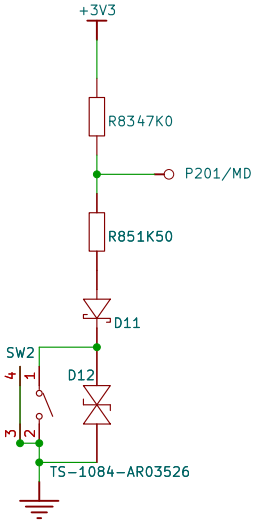

RESET PUSH-BUTTON

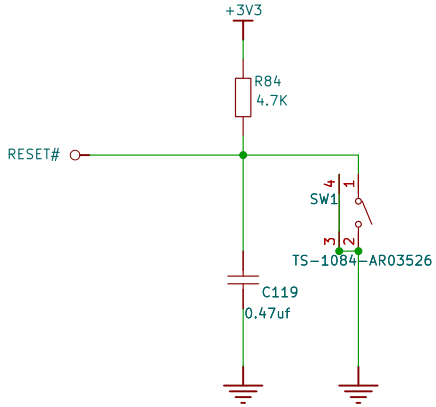

Titan Mini

Author: MikeZhang
https://www.rt-thread.org/

Sheet: /
File: INTERFACE.kicad_sch

Title: INTERFACE

Size: A4	Date: 2026-03-26	Rev: HW:V1.0
KiCad E.D.A. 10.0.0		Id: 13/13