Appendix D - BPMN Models and Forms

- Course: Event-driven and Process-oriented Architectures (EDPO), FS2026, University of St.Gallen
- Group 4
  - Evan Martino
  - Marco Birchler
  - Roman Babukh

This document provides visual representations of the executable BPMN processes and their associated Camunda forms used in the project.

1. RegisterUser Process

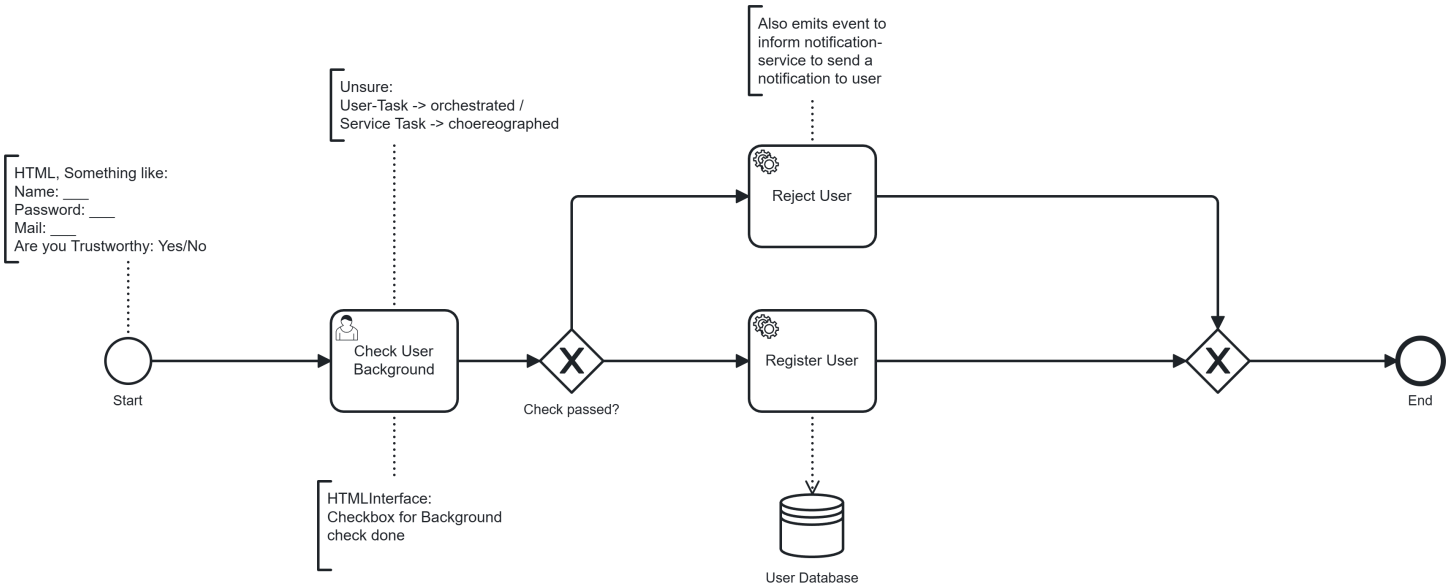

1.1 Verify User Form

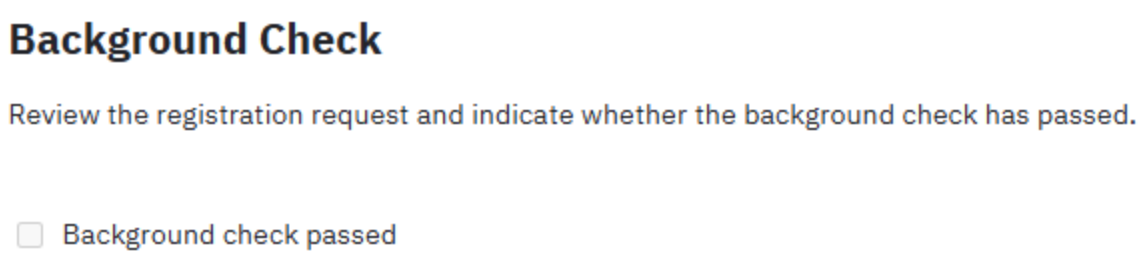

2. VerifyContent Process

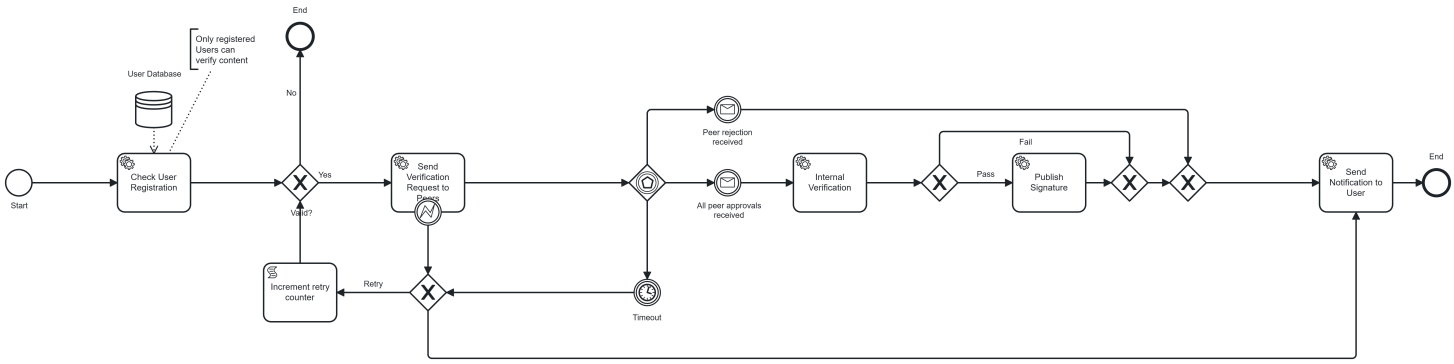

3. ReportContent Process

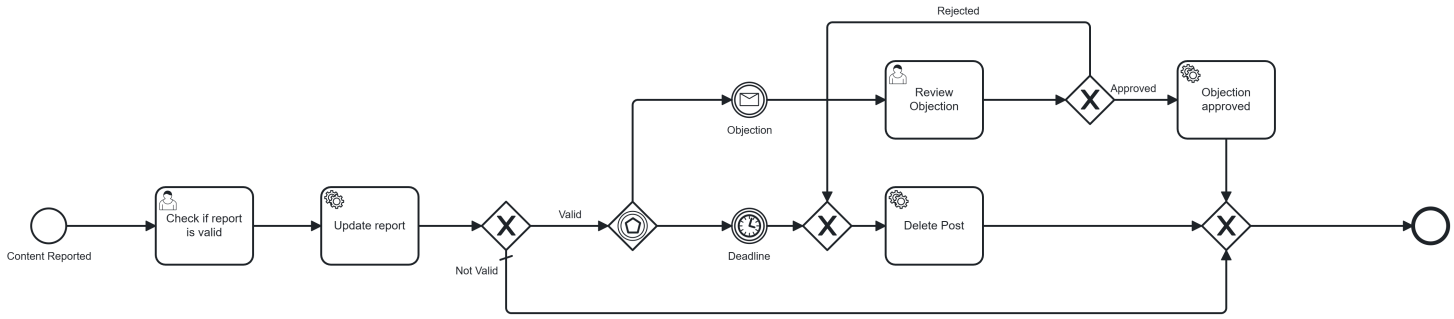

3.1 Check Report Validity Form

Check Report Validity

Review the submitted content report and determine whether it describes a genuine policy violation.

- [ ] Report is Valid

3.2 Review Objection Form

Review Objection

The post owner has objected to this report. Review their objection and determine whether it should be rejected (post is deleted) or upheld (post remains).

- [ ] Reject Objection