# Automotive

## Product Guide

Instrument clusters | Lighting | Heads-up displays | Rear-seat entertainment

Radio head units | RKE/TPMS | Navigation | Body controls

**Learn more** **Page**


Power management . . . . . 2
Displays and touch-screen control . . . . . 7
Supervisory . . . . . 11
HB LED . . . . . 12
Audio . . . . . 14
Battery management . . . . . 16
LVDS . . . . . 18
HF RF . . . . . 20
Video . . . . . 22


**Page**


RKE/TPMS/GPS . . . . . 24
Sensor interfacing . . . . . 26
Current-sense amplification . . . . . 27
Capacitive sensing . . . . . 28
Data conversion . . . . . 29
Timekeeping . . . . . 30
"V" flow . . . . . 31
Quality . . . . . 32


Edition 5, October 2010

MAXIM
INNOVATION DELIVERED®

# 1.2A step-down converter keeps your radio or GPS unit running during severe cold-crank input transients

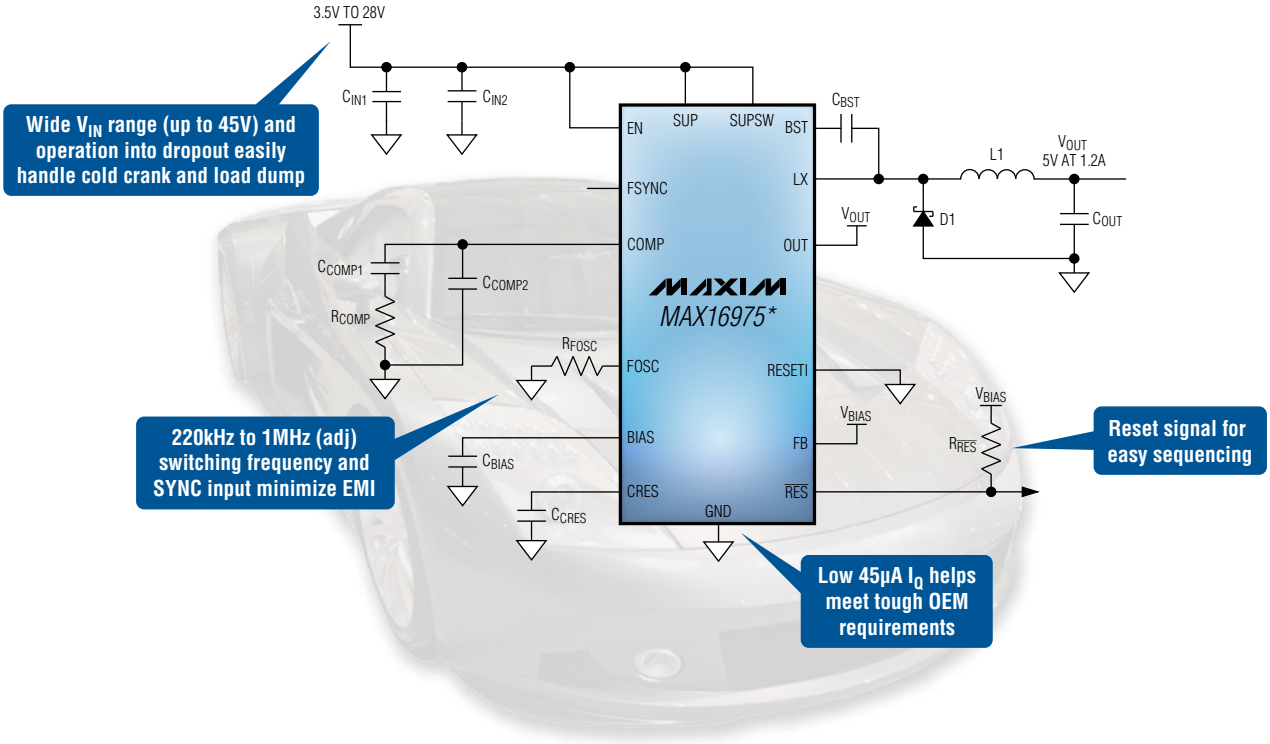


# Rugged automotive step-down controller keeps $I_Q$ low to meet 100µA OEM module requirements

- 60µA (typ) operating current in skip mode extends battery life
- Wide 3.5V to 36V $V_{IN}$ range (42V, abs max) allows operation directly from battery
- Adjustable switching frequency from 200kHz to 1MHz avoids AM band frequency interference
- 100% duty cycle during undervoltage transients maintains high efficiency and low operating supply current

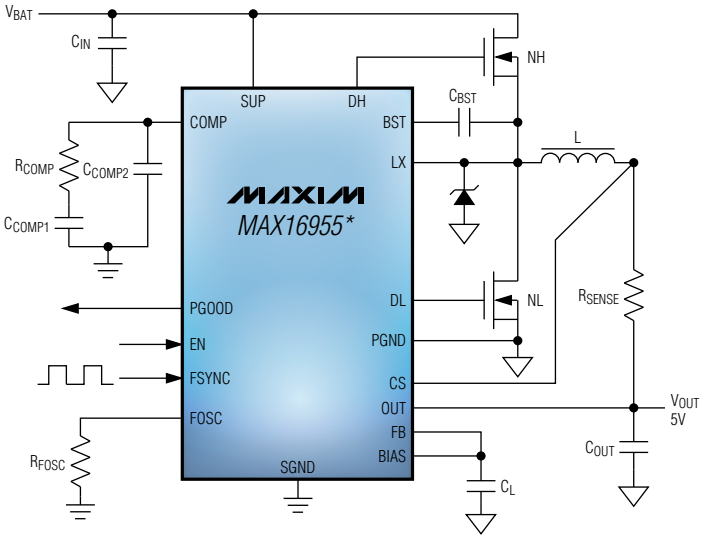


*Future product—contact factory for availability.

# 28V, 1A, high-frequency synchronous buck gives you the smallest solution footprint

The MAX16903 is the industry's smallest automotive-grade synchronous buck converter capable of delivering 1A from a 3.5V to 28V input. Its 2.1MHz switching frequency allows you to use smaller external components while avoiding interference with the AM-radio band. This gives you an extremely compact solution with a very low BOM cost.

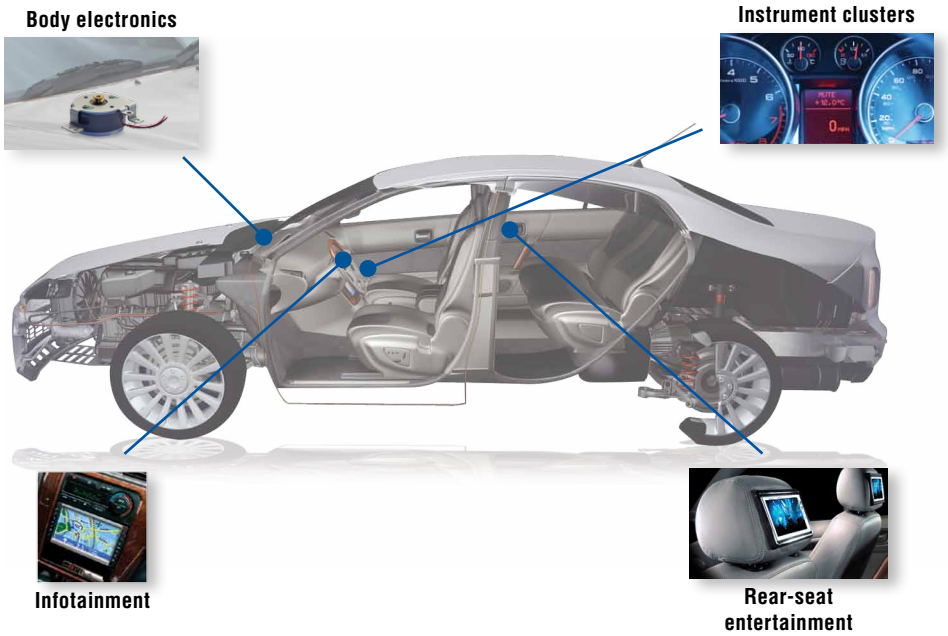


**Ultra-small packaging**

**3mm x 3mm, 10-pin TDFN-EP**

### Saves space and reduces BOM cost

- 2.1MHz operation allows tiny external components
- Integrated high- and low-side FETs with internal compensation eliminate the need for an external Schottky diode
- Requires only low-cost ceramic input/output capacitors

### Conserves battery life

- 25µA quiescent current (no load) meets tight power budgets

### Speeds automotive compliance

- Fixed-frequency operation and optional spread-spectrum modulation reduce EMI
- Wide input range allows direct operation from battery
- Load-dump tolerant to 42V
- AEC-Q100 qualified
- -40°C to +125°C operation
- 10-pin TDFN-EP and 16-pin TSSOP-EP packages

**Protect your USB HVD+, HVD-, and HVBUS lines from the brutal automotive environment**

**www.maxim-ic.com/auto-USB**

# Ultra-low-$I_Q$ automotive LDO conserves battery life in always-on applications

## 45V, 200mA LDO consumes only 20µA $I_Q$

The MAX16910 operates over a wide input-voltage range (3.5V to 30V), survives load dumps up to 45V, and is guaranteed for operation over the -40°C to +125°C automotive temperature range. It includes three pin-selectable, output-voltage configurations: 5.0V or 3.3V fixed, and adjustable from 1.5V to 11V. Additionally, the MAX16910 reduces component cost by operating with small ceramic capacitors.

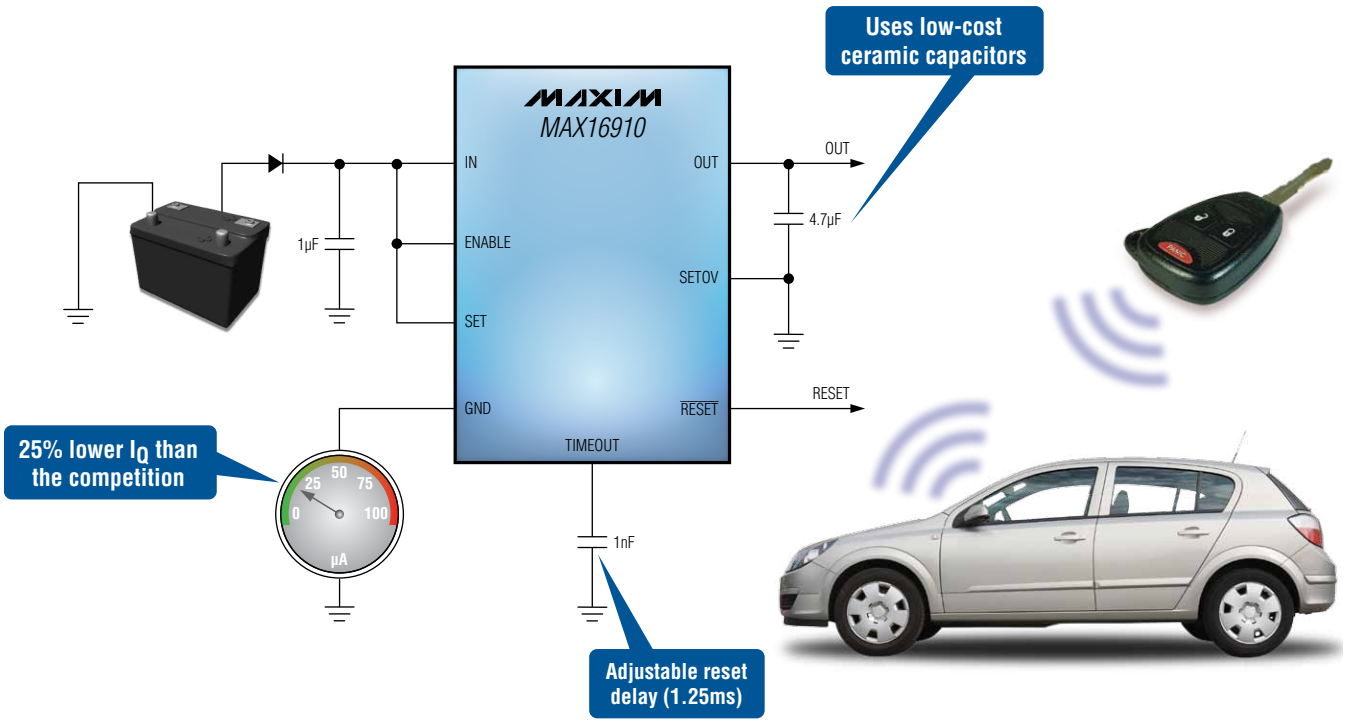


### Industry's lowest $I_Q$ automotive LDOs

| Part | No-Load $I_Q$ (µA) | $I_{OUT}$ (mA) | $V_{IN}$ Range (V) | Adjustable Output Voltage (V) | Reset Threshold (%) | Package (mm x mm) |
|---|---|---|---|---|---|---|
| MAX16910 | 20 | 200 | 3.5 to 30 (45, max) | 1.5 to 11 | 87.5, 92.5 | 8-TDFN-EP (3 x 3), 8-SO-EP (5 x 4) |
| MAX15006 | 10 | 50 | 4 to 40 (45, max) | 1.8 to 10 | — | 6-TDFN-EP (3 x 3) |
| MAX15007 | 10 | 50 | 4 to 40 (45, max) | 1.8 to 10 | — | 6-TDFN-EP (3 x 3) |

# Industry's smallest 4-channel automotive PMIC that connects directly to the car battery

## Two step-down DC-DCs and two LDOs in a 25mm² package!

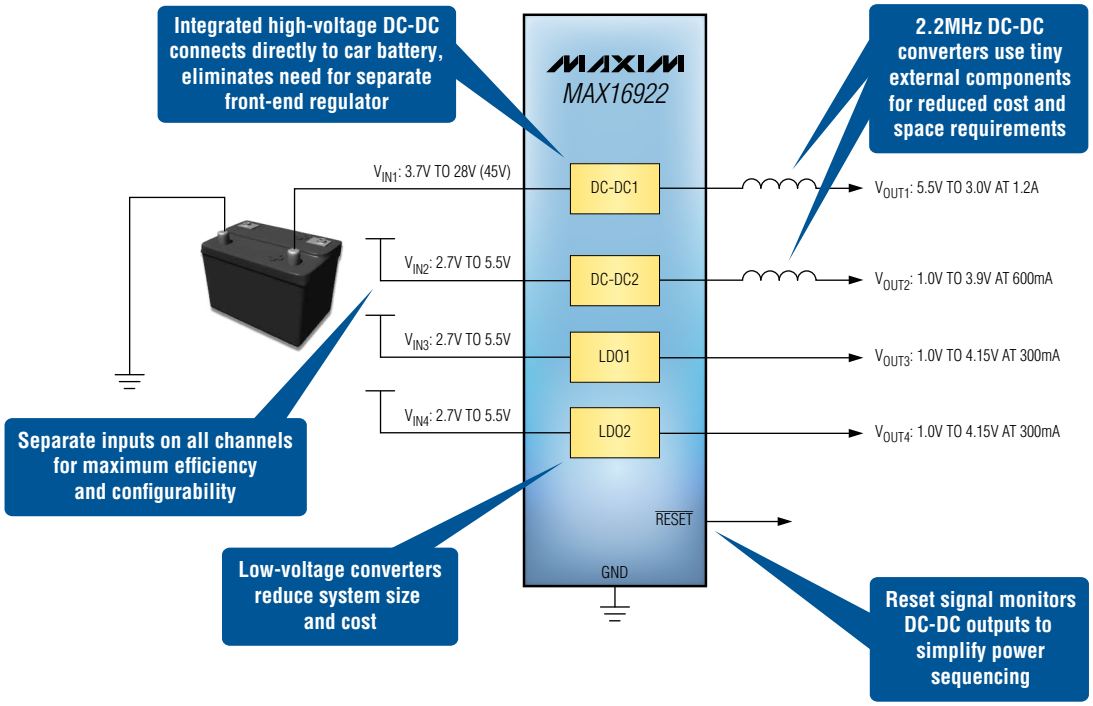


# 2MHz, high-voltage PMIC delivers four rails in tiny solution size

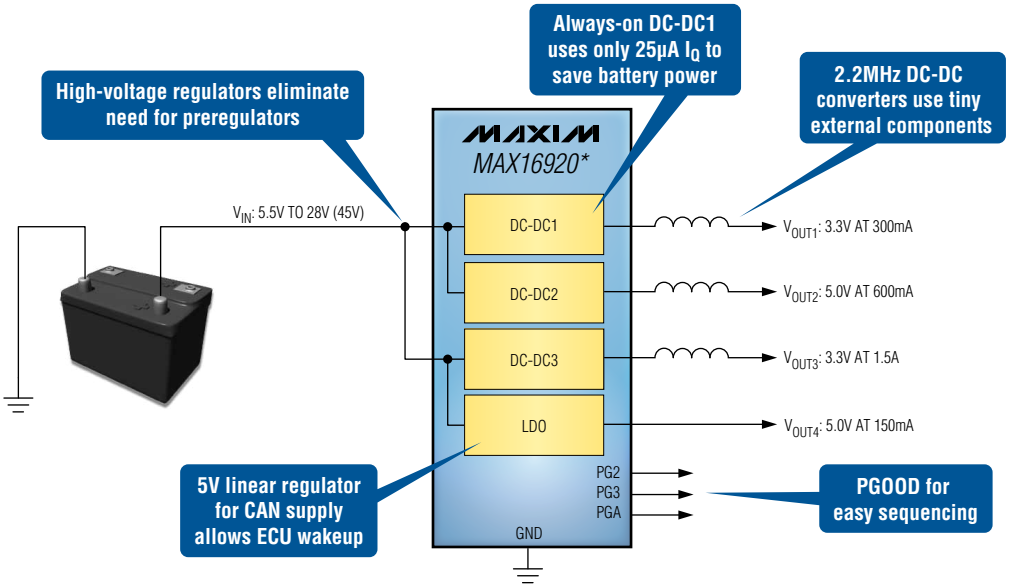


*Future product—contact factory for availability.

# High-voltage LDOs and switch feature precision current limiting to prevent system damage to remote RF LNAs

## Provide fault-proof phantom power to remote antennas

**Prevent system damage while providing regulated power**

- Analog current measurement output
- Detect open-load and short-circuit conditions
- Thermal shutdown
- Overcurrent blanking enables hot-swapping
- Automotive temperature range: -40°C to +105°C
- AEC-Q100 qualified

### MAX16946*/MAX16947*
### High-side current-sense LDOs

- Tolerate load-dump supply up to 45V
- Regulated 3.3V to 12V LDO output
- Adjustable current limit (400mA, max)

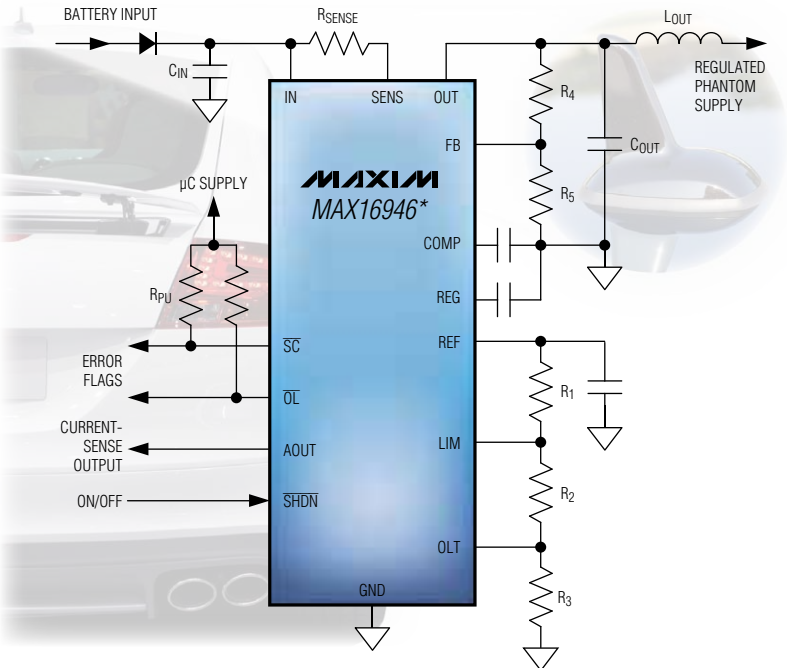


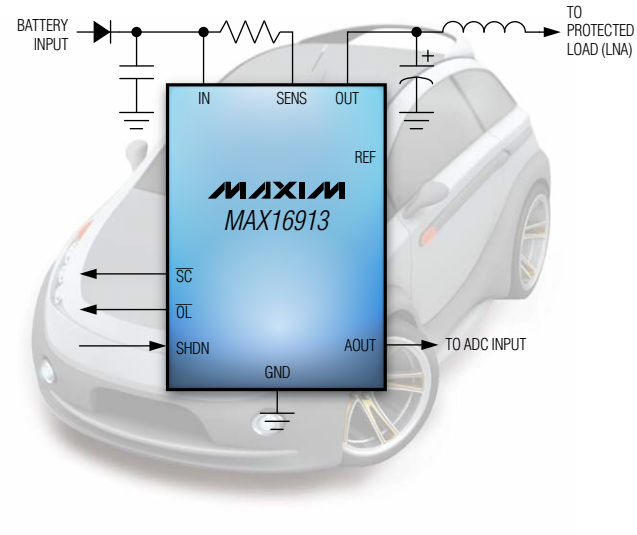


### MAX16913
### High-side current-sense switch

- Tolerates load-dump supply up to 42V
- Adjustable current limit (340mA, max)

*Future product—contact factory for availability.

# Cost and space-effective solutions for dashboard, navigation, and entertainment systems

## Automotive TFT-LCD PMICs reduce EMI through spread-spectrum switching

### MAX16927*

**Cuts display costs and space requirements**

- Highly integrated power supply
  - Buck converter, boost converter, Cuk converter, gate voltage converters, and VCOM buffers
- Flexible configuration for high-power positive output or positive output and negative output
- Wide 4.5V to 16V operating voltage range allows direct connection to car battery
- High-frequency operation (2.1MHz for buck converter, 1.2MHz for boost/Cuk converters)

### MAX16928*

**Cost-effective, high-performance solution**

- Highly integrated power supply
  - Boost converter, linear regulator, and gate voltage controllers
- Flexible sequencing of positive gate voltage regulator and negative gate voltage controller

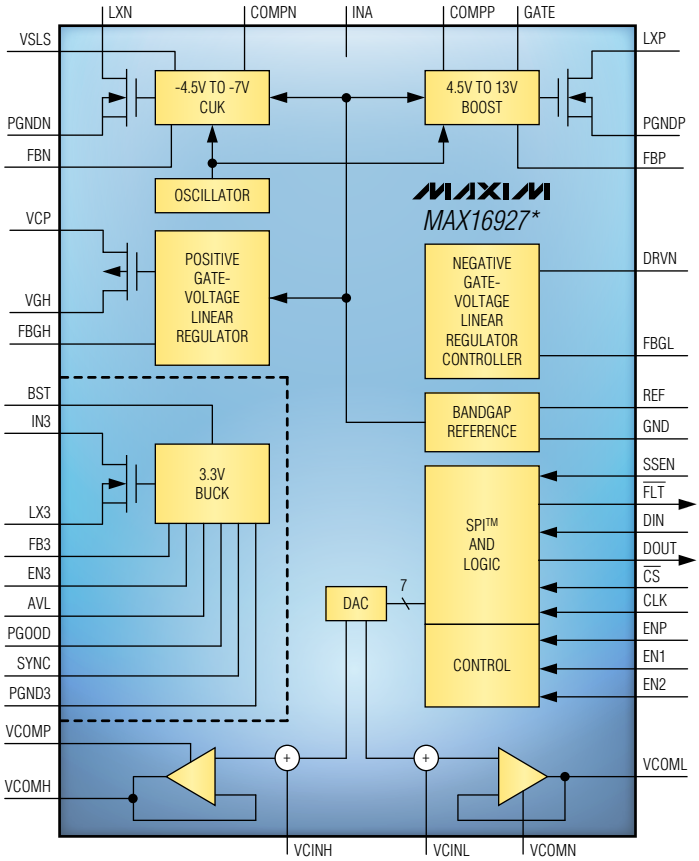


SPI is a trademark of Motorola, Inc.
*Future product—contact factory for availability.

# First capacitive touch-screen solutions designed for haptic feedback

## Industry's best sensitivity provides reliability for a variety of automotive touch panels

The MAX11850*/MAX11851*/MAX11853*/MAX11855*/MAX11856* capacitive touch-screen controllers (C-TSCs) are designed to work with a wide variety of capacitive touch panels. Their superior analog-front-end performance offers reliable touch detection and support for thicker, more ruggedized panel stack-ups, which is important for automotive environments. The parts also include support for capacitive buttons. With their glueless interface to Maxim's haptic actuator controllers, they provide a full solution for touch and haptics to further enhance the user experience.

### Superior signal to noise ratio of 60dB offers best sensitivity

- Flexibility for using one- or two-layer indium tin oxide (ITO) touch panels
- Improved dynamic range; no shielding layer required
- Allows thicker cover glass/plastic for improved ruggedness
- Supports up to four-point multitouch for advanced gesture support (MAX11855/MAX11856)

### Enhanced user experience

- Direct haptic trigger output from TSC provides minimal latency for "real feel" capacitive touch systems
- Compatible with motor, piezo actuator, electroactive polymer actuator module (EPAM), or other technologies for haptic feedback

### Low-power operation

- Variable frame rate, sensor count, and automatic power-down features reduce total system power; ideal for power-sensitive applications

### Analog performance supports large screen sizes

- Allows use of wide range of capacitive touch panels, providing design flexibility
- Superior sensitivity and dynamic range allow mounting on flex or PCB to reduce system cost
- Available screen sizes
  - 7in screen size†
  - Up to 14in screen size† with dual IC (MAX11853)

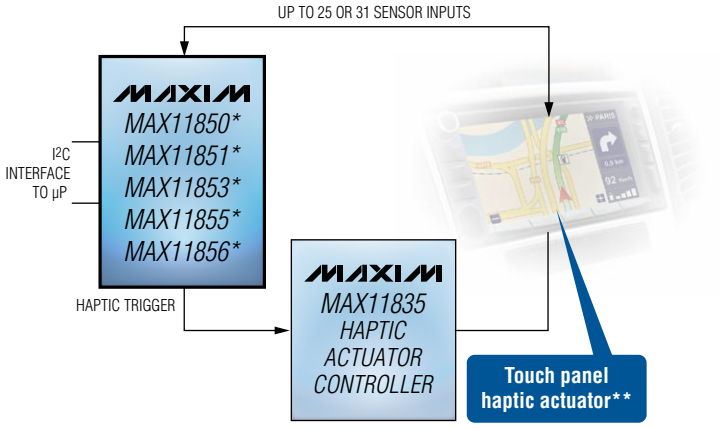


| Part | No. of Sensors | Package (Interface) | Functionality | Availability |
|---|---|---|---|---|
| MAX11850* | 31 | 48-TQFN (SPI) | 2-touch support | Samples and EV kits available |
| MAX11851* | 25 | 40-TQFN ($I^2C$) | 2-touch support | Samples and EV kits available |
| MAX11853* | 31 | 48-TQFN ($I^2C$) | Supports 2 touch and cascading two ICs for panels > 7in | Sampling soon |
| MAX11855* | 25 | 40-TQFN ($I^2C$) | 4-touch support | Sampling soon |
| MAX11856* | 31 | 40-TQFN ($I^2C$) | 4-touch support | Sampling soon |

†Maximum screen size dependent on touch accuracy requirements.
*Future product—contact factory for availability.
**Haptic actuator can be piezo, polymer, motor, etc.

# Intelligent chip solutions simplify adding tactile feedback to any automotive touch-screen application

The MAX11835/MAX11836 haptic actuator controllers are the newest additions to Maxim's family of haptic products. These parts are capable of driving a wide range of high-voltage actuators, including single-layer piezos, multilayer piezos, and EPAMs, over a wide range of voltages. The solution is easily scalable to larger screens, or nonscreen areas that require haptics, as each IC is controlled through an $I^2C$ interface and thus multiple parts can be controlled over a single interface. Alternatively when used with the MAX1185x series of C-TSCs, the haptic playout is triggered by the TSC directly. The MAX11836 has integrated support for pressure sensing using force-sense resistors mounted on the touch screen.

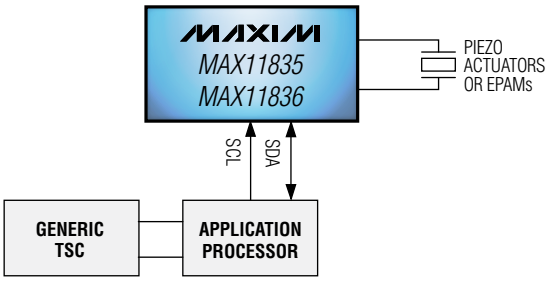


**Highly integrated solution saves space and reduces BOM cost**

- Drive/sense circuitry for external force-sense resistors that measure touch pressure to avoid false touches (MAX11836)
- Haptic pattern generator
- Boost converter
- High-voltage driver for single-/multilayer piezo actuators or EPAMs
- Real-time haptics input to support drag and scroll, as well as playout of dynamically changing haptic waveforms (MAX11835)
- Available in a tiny 2.1mm x 2.1mm, 25-bump wafer-level package (WLP)

**Complete flexibility for simple haptic feedback implementation**

- On-chip storage of user-defined patterns
- Real-time transfer of haptic patterns from application processor

**On-chip generation and storage improve haptic response time**

- Need no fast serial interface
- Reduce processor load for faster haptic waveform transmission
- When used with MAX1185x C-TSCs, playout from the chip can be triggered through a proprietary single-wire interface

| Part | Touch-Pressure Measurement | Package | Interface | Availability |
|---|---|---|---|---|
| MAX11835 | | 25-WLP | $I^2C$ | Mass production, EV kit available |
| MAX11836 | ✓ | | | Mass production |

# Smallest and smartest resistive touch-screen controllers

## High integration saves space while minimizing bus loading and power consumption

The MAX1180x/MAX11811 have advanced operating modes and other digital functionality to reduce bus loading of the system/applications processor, minimize power consumption, avoid system latency, and simplify host-processor interpretation of complex touch patterns (gesture recognition). The MAX1180x/MAX11811 ICs are all AEC-Q100 qualified for automotive applications.

The MAX11800 (SPI) and MAX11801 ($I^2C$) are resistive touch-screen controllers (R-TSCs) available in TQFN and the industry's smallest (1.6mm x 2.1mm) WLP packages. The MAX11811 ($I^2C$) is an innovative R-TSC with integrated tactile-feedback drivers for ERM and LRA motors. The MAX11811 also contains the drive and sense circuits required to implement proximity detection—they can directly connect to the motor to create tactile feedback, thereby eliminating the need for a dedicated interface on the application processor or host controller.

**Integrated R-TSCs include low-voltage haptics drivers and proximity sensing**

- Eliminate additional circuitry and save board real estate
- Reduce load on application processor

**Flexibility**

- Drive a low-voltage motor directly, or piezo actuators, when used in combination with a haptic actuator controller (MAX11835/MAX11836)

**Low-power operation**

- Automatic power-down feature reduces total system power, making these R-TSCs ideal for power-sensitive applications

| Part | Resolution (Bits) | Tactile Feedback | Proximity Sensing | Keypad Decoder | Electrical Interface | Power Supply (V) | Package | Availability |
|---|---|---|---|---|---|---|---|---|
| MAX11800 | 12/8 | | | | SPI | 1.7 to 3.6 | 12-TQFN/WLP | Mass production, EV kit available |
| MAX11801 | 12/8 | | | | $I^2C$ | 1.7 to 3.6 | 12-TQFN/WLP | Mass production, EV kit available |
| MAX11811 | 12/8 | ✓ | ✓ | | $I^2C$ | 1.7 to 3.6 | 20-TQFN | Mass production, EV kit available |
| MXB7843 | 12/8 | | | | SPI/QSPI™ | 2.3 to 5.2 | 16-QSOP/TSSOP | Mass production, EV kit available |
| MXB7846 | 12/8 | | | | SPI/QSPI | 2.3 to 5.2 | 16-QSOP/TSSOP | Mass production, EV kit available |
| MAX1233 | 12/10/8 | | | ✓ | SPI/QSPI/MICROWIRE® | 2.7 to 3.6 | 28-TQFN/QFN | Mass production |
| MAX1234 | 12/10/8 | | | ✓ | SPI/QSPI/MICROWIRE | 4.75 to 5.25 | 28-TQFN/QFN | Mass production |

QSPI is a trademark of Motorola, Inc.
MICROWIRE is a registered trademark of National Semiconductor Corp.

# Automotive regulators provide highest reliability with wider safe operating range

Maxim's family of automotive regulators operates over a very wide input-voltage range (up to 72V) and tolerates many voltage transients without any external circuitry. The ICs are fully specified up to +125°C and can dissipate more power than most competitive solutions. They also integrate various features such as a reset output, an extra undedicated comparator (PFI/PFO), a watchdog timer, enable and hold functionality, and a gate driver (GATEP) that protects against reverse-battery conditions by using a pFET.

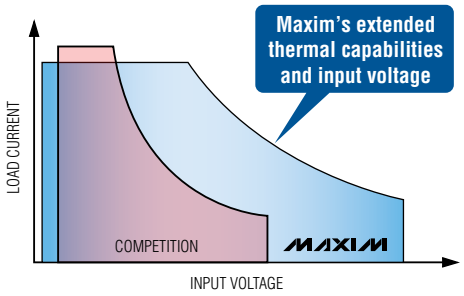


| Part | Output(s) | Watchdog | Enable Input(s) | Hold Input(s) | Additional Comparator | GATEP |
|---|---|---|---|---|---|---|
| MAX6765/66 | 100mA | — | 1 | | — | |
| MAX6767/68 | 100mA | — | 1 | ✓ | — | |
| MAX6769/70 | 100mA | — | 1 | | RESETIN | |
| MAX6771/72 | 100mA | — | 2 | | — | |
| MAX6773/74 | 100mA | Fixed | 1 | | — | |
| MAX6791/92 | 2 x 150mA | Adjustable, windowed | 2 | ✓ | PFI/PFO | ✓ |
| MAX6793/94 | 2 x 150mA | Adjustable | 2 | ✓ | PFI/PFO | ✓ |
| MAX6795/96 | 300mA | Adjustable | 1 | ✓ | PFI/PFO | ✓ |

# Overvoltage protectors prevent damage to downstream automotive circuitry

Maxim's overvoltage protectors can protect your circuit from transient voltages up to 72V, overvoltages, or reverse-voltage conditions. These devices use series-pass MOSFETs to instantly disconnect the circuit during a fault condition. After the fault condition is resolved, the MOSFETs turn back on so that the circuit can continue to operate.

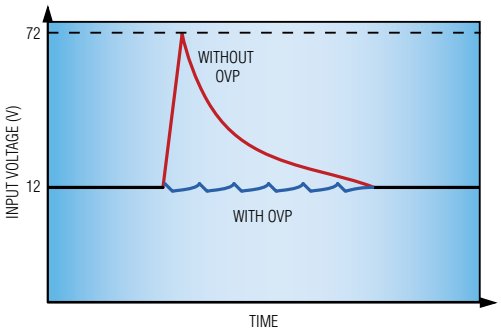


| Part | Function | MOSFET | Reverse Voltage | Undervoltage | Latch | POK | Built-In LDO |
|---|---|---|---|---|---|---|---|
| MAX6397 | Switch/limiter | nFET | | | — | | ✓ |
| MAX6495 | Switch/limiter | nFET | | | — | | |
| MAX6496 | Switch/limiter | nFET | ✓ | | — | | |
| MAX6497 | Switch | nFET | | | Latch | ✓ | |
| MAX6498 | Switch | nFET | | | Autoretry | ✓ | |
| MAX6499 | Switch/limiter | nFET | | ✓ | Latch with clear | | |
| MAX16013 | Switch/limiter | pFET | ✓ | | — | | |
| MAX16014 | Switch | pFET | ✓ | | Latch | | |

# Highly integrated, high-output-current multistring drivers provide a reliable, cost-effective solution

## Protect LEDs and driver in case of fault, and allow dimming over a 5000:1 range

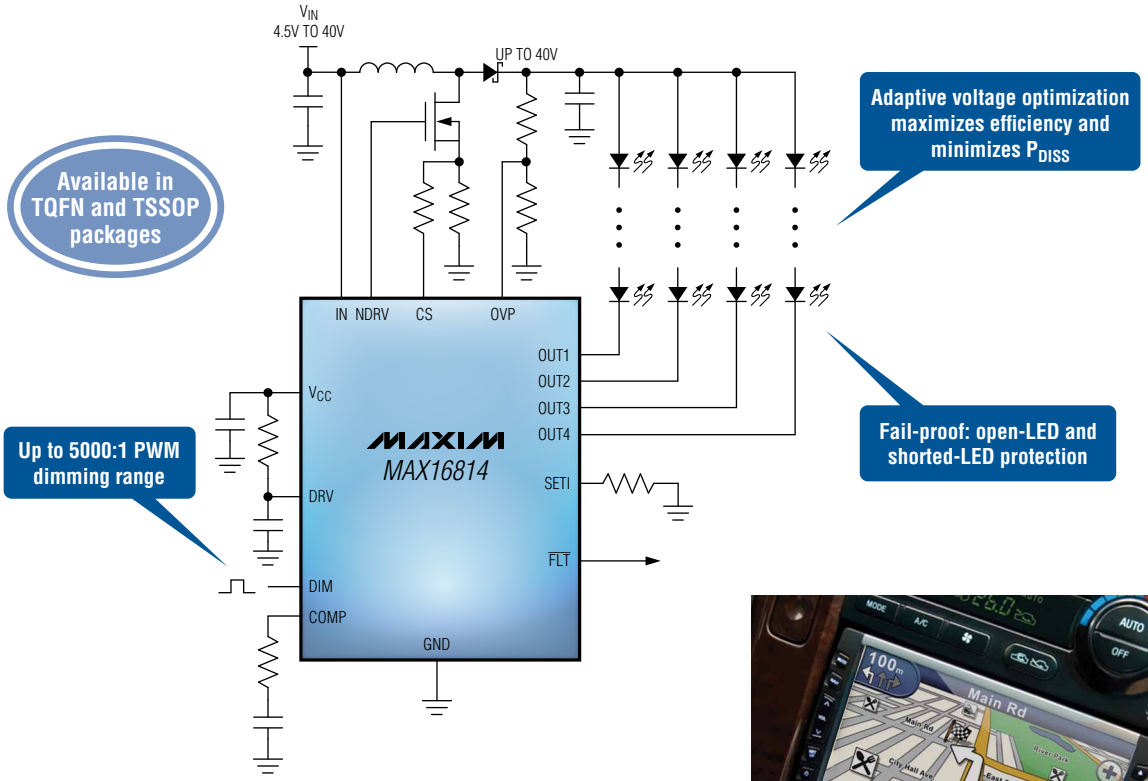

**Robust, fault-tolerant solution**

- 40V input capability
- Automatically disables LED strings if LEDs fail as open or short
- Fault-detection output

**Allow dimming over a wide range**

- 5000:1 PWM dimming range at 200Hz dimming frequency

**Ideal for a wide range of backlighting applications**

- Four (MAX16814) or two (MAX16838) strings
- Up to 150mA/string

**Highly integrated, cost-effective solution**

- Internal MOSFETs (except switching MOSFET for MAX16814)
- Output-voltage optimization for maximum efficiency
- LED fault protection

# Boost/buck-boost controller enables more reliable, fault-tolerant LED drivers with lower EMI noise

**Reliable, fault-tolerant solution**

- High-side current sense and high-side pMOS drivers allow protection against any short between input, output, and ground
- Wide input-voltage capability up to 65V
- Overvoltage and thermal protection
- Fault indicator output
- -40°C to +125°C temperature range

**Improved EMI**

- Internal frequency dithering improves EMI and reduces EMI filtering needs

**Very flexible**

- Wide PWM-dimming range
- Allows single-wire connection to the LEDs
- Boost, buck-boost, buck, and SEPIC configurations
- ±2% accurate voltage reference output (MAX16833B)

**Packaged in a 16-pin TSSOP**

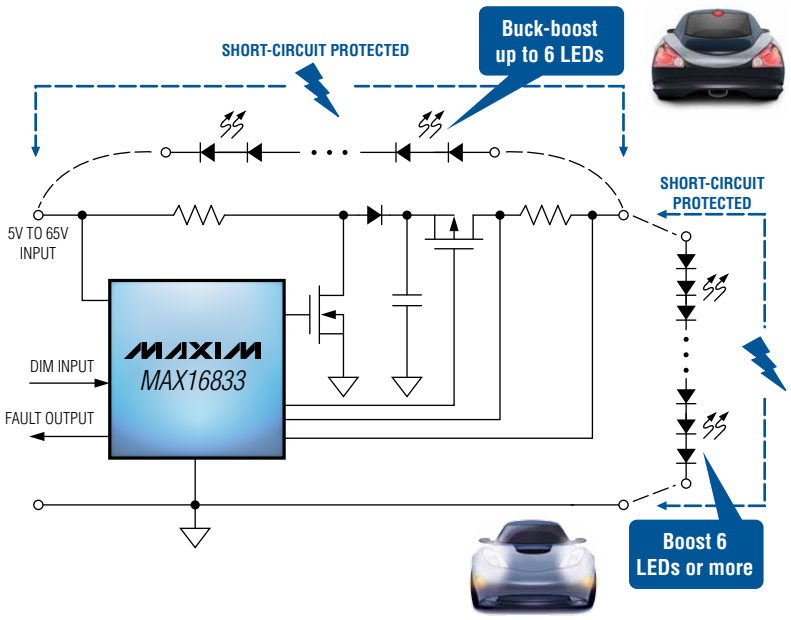


# Linear driver uniquely fulfills automotive fault-detection requirements

**Advanced fault-detection features**

- Open-LED detection output
- In multistring applications, if one string fails, all are shut down

**Constant-current LED control**

- 15mA to 100mA LED current
- ±5% current accuracy

**Ideal for automotive voltage and temperature requirements**

- 5V to 40V operating input-voltage range
- -40°C to +125°C temperature range

**Available in 6-pin TDFN and 8-pin SO packages**

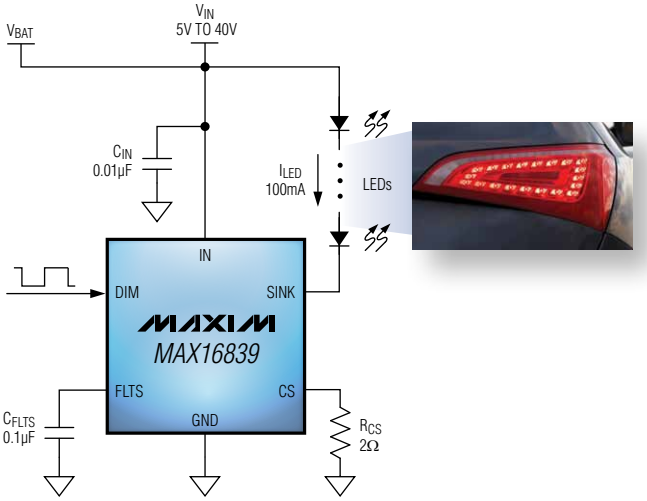

# Industry's first headphone amplifiers designed for automotive applications

## Integrate output protection and deliver superior audio quality

### Get superior performance at a lower cost than wireless solutions

| Parameter | Infrared Wireless Solutions | MAX13330/MAX13331 | The Maxim® Advantage |
|---|---|---|---|
| THD+N | 0.30% | **0.01%*** | **30 times better THD+N** |
| SNR | 65dB | **100dB** | **35dB SNR improvement** |
| Frequency Response | 25Hz to 18kHz | **10Hz to 22kHz** | **Full audio-frequency response** |
| Channel Separation | 60dB | **75dB** | **Enhanced channel separation** |

*0.01% THD+N at 1kHz with 125mW output power into a 32Ω load.

# Protected line drivers deliver high-fidelity audio in harsh automotive environments

**Excellent protection and robustness**

- ±15kV Air-Gap and ±8kV Contact Discharge ESD protection (IEC 61000-4-2)
- Integrated protections include diagnostics and FLAG output for ease of use
  - Short to ground or battery
  - Overcurrent
  - Overtemperature
  - Load dump

| Part | Gain (dB) | Temp Range (°C) | Package |
|---|---|---|---|
| MAX13325 | 12 | -40 to +105 | 28-TSSOP-EP |
| MAX13326 | 0 | | |

**High-quality audio**

- 112dB SNR
- 70dB PSRR
- 80dB CMRR
- Low 0.002% THD at $4V_{RMS}$ into 2.7kΩ loads
- Low output noise ($3\mu V_{RMS}$, MAX13326 only)

# 4 x 50W Class D amplifiers provide high-fidelity automotive audio

## Ultra-efficient amps operate down to 6V with full automotive diagnostics, load-dump protection, and excellent EMI performance

**Fulfill automotive-grade requirements**

- 6V to 26V operating range
- Load-dump protection to 50V
- Short-circuit protection
- Open $V_{BAT}$/GND tolerant
- Thermal overload protection/warning
- On-board diagnostics through $I^2C$ interface
  - Short to $V_{BAT}$/GND
  - Open/shorted load
  - Tweeter detection

**Provide high-quality audio**

- Programmable clipping detection
- 0.05% THD performance due to feedback after the filter
- High output power (10% THD+N)
  - 4 x 50W into 2Ω at 14V
  - 4 x 30W into 4Ω at 14V
  - 4 x 85W into 4Ω at 24V
- Superior EMI performance meets OEM specifications

| Part | $V_{IN}$ Operating Range (V) | Temperature Range (°C) | Package |
|---|---|---|---|
| MAX13300* | 6 to 18 | -40 to +125 | 48-TSSOP-EP |
| MAX13301* | 6 to 26 | | |
| MAX13302* | 8 to 18 | | |

*Future product—contact factory for availability.

# Complete solution for automotive battery with 80V-tolerant process

## Robust, daisy-chained bus reduces total system cost by up to 80%

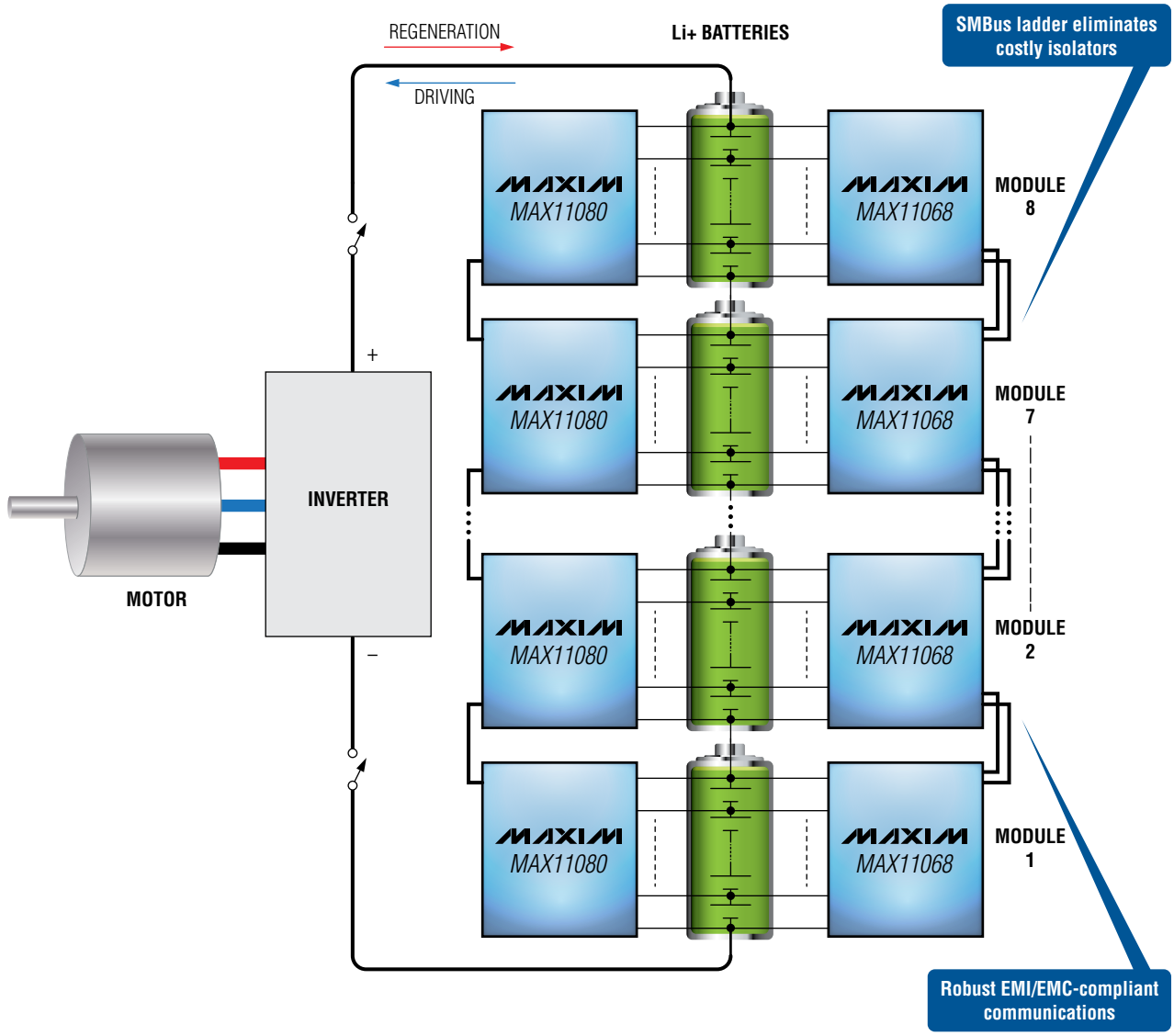


### MAX11080/MAX11081
### Fault protector

- Industry's best overvoltage accuracy
- Thorough pin open/short detection
- Compatible with ALL cell types
- Built-in self-diagnostics
- Ultra-low-power current drain: 80µA
- Shutdown-mode current: 2µA
- Daisy-chain up to 31 MAX11080/81 devices

### MAX11068
### Smart battery AFE

- Highest voltage: 80V-tolerant process
- Highest cell count: 12-cell capable
- Fastest cell scanning: 107µs
- Ultra-low-power current drain: 75µA
- Shutdown-mode current: 1µA
- Daisy-chain up to 31 MAX11068 devices

# Newest automotive battery-monitoring product for the green revolution

## Meets automotive OEM safety goals and delivers more miles per charge

### MAX17830*
### Smart battery AFE

**Safe**

- 48-cell hot-plug guarantee
- ASIL**-enabling features
- Fuel-cell and SuperCap safe

**Rugged**

- Passes industry-standard BCI level
- Passes 200V/m stripline cable tests

**High performance**

- Virtual simultaneous cell sampling
- Samples 96 cells 100 times per second

**Second-generation battery monitor**

- Based on the MAX11068
- Daisy-chain up to 31 MAX17830 devices to eliminate costly CAN nodes

*The MAX17830 is the next-generation version of the MAX11068, which is currently being used to optimize energy efficiency and control in OptaMotive's super-efficient electric vehicle, the E.Rex. Combining Maxim innovation with Nuvation℠ engineering, the MAX11068-based battery-management system provides both space and cost savings while accurately tracking up to 372 cell voltages within the noisy automotive environment.*

Truly an automotive power-train part, the MAX17830 has been enhanced to pass the toughest industry-standard EMC/EMI tests, such as bulk current injection (BCI). It is the only IC to pass such tests while providing external cell balancing. New fault-detection features keep this battery monitor in sync with today's emerging automotive safety and diagnostic standards.

Revolutionize your battery pack with the MAX17830!

**MAX17830* EV board passes industry-standard BCI requirements**

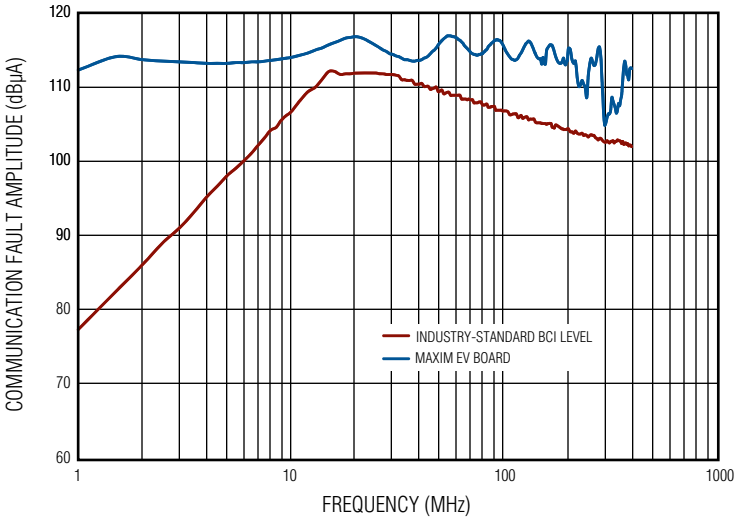


*Future product—contact factory for availability.
**Automotive safety integrity level.
Nuvation is a service mark of Nuvation Research Corporation.

# Smart, 18-bit, bidirectional LVDS SerDes eliminates need for CAN or LIN interface

The MAX9257/MAX9258 LVDS SerDes chipset provides a complete bidirectional digital video link between the automotive ECU and camera. An integrated control channel eliminates the need for an external CAN or LIN interface, thus simplifying design and reducing system cost.

**Minimizes system cost**

- Integrated control channel eliminates external CAN or LIN bus
- Advanced EMI suppression allows the use of lower cost cables and connectors

**Smart features improve performance**

- Programmable serial data rate optimizes bandwidth utilization
- Patented spread-spectrum modulation* reduces EMI in serial data and deserializer output
- High ESD protection: ±10kV Contact and ±30kV Air-Gap Discharge (ISO 10605)

**Why do this with the typical automotive safety application?**

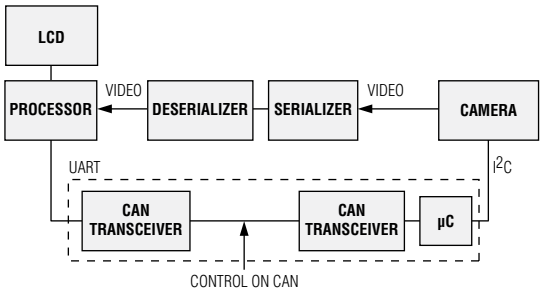


**When you can do this with Maxim's simple solution?**

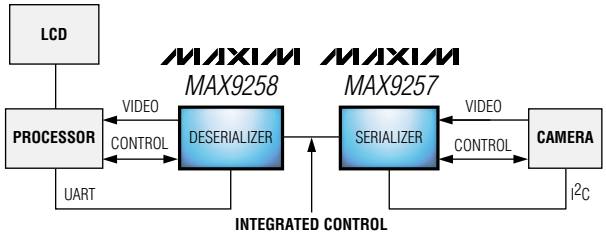

*U.S. Patent 6,847,257.

# Complete GMSL SerDes for digital video, audio, and control data

## Supports next-generation requirements for infotainment systems

The MAX9259/MAX9260 SerDes chipset provides a fully integrated GMSL solution for automotive infotainment, navigation, and rear-seat entertainment applications. This chipset integrates a bidirectional, full-duplex control channel, thus simplifying design while saving space and cost.

### Integrates video and control in a single channel

- Differential, full-duplex control channel eliminates the need for a separate CAN or LIN interface
- Programmable spread spectrum minimizes EMI, speeding product qualification
- Driver preemphasis (MAX9259) and channel equalizer (MAX9260) extend link length and enhance link reliability

### Enhances the multimedia experience

- Supports XGA (1280 x 768) or dual-view WVGA (two 854 x 480) panels
- Delivers 24-bit color and digital audio
- Supports multiple camera inputs

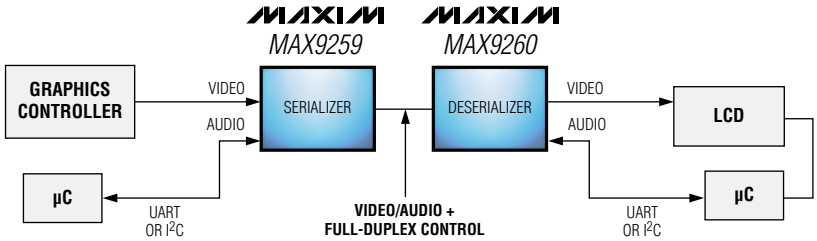

# Experience uncompromised infotainment and navigation performance with space-efficient designs

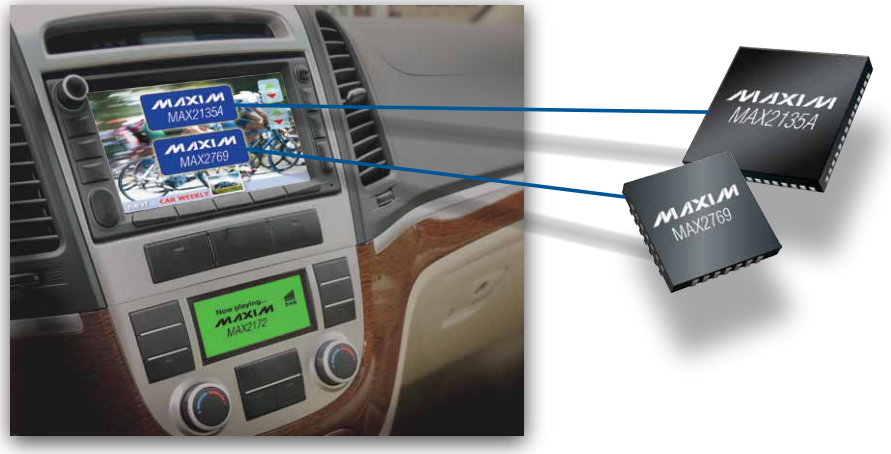


## MAX2135A

### Industry's first diversity digital TV, ISDB-T/DVB-T tuner

- High dynamic range provides superior reception (-99dBm to +10dBm)
- 50% smaller footprint (7mm x 7mm) than the competition allows for much smaller designs

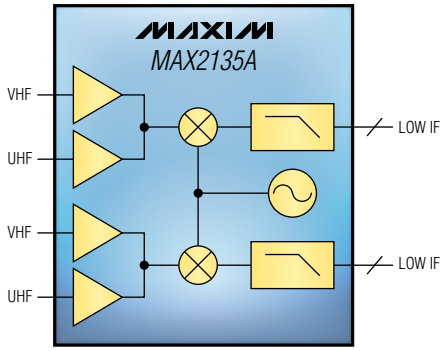


**Lower noise figure and power at half the size of the competition**

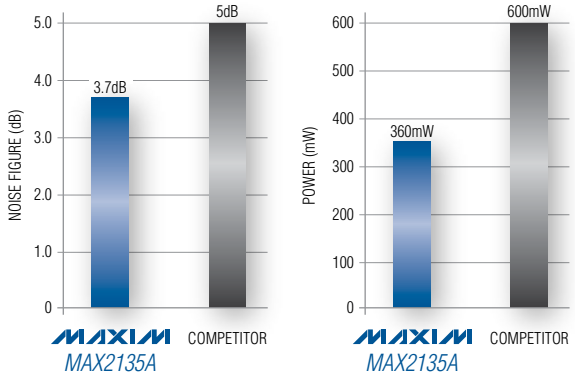


## MAX2769

### Complete GPS, GLONASS, and Galileo front-end

- Highly integrated RF-to-bits receiver eliminates external ADC, thus increasing design flexibility to support any navigation application
- Achieves low 1.4dB noise figure without an external LNA for efficient satellite syncing
- Noise figure falls to 0.8dB when paired with MAX2659

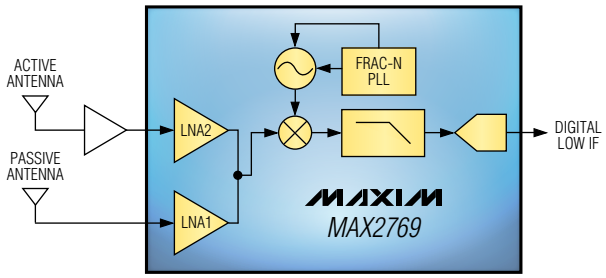

# Direct-conversion, low-IF DAB tuner allows low-power, tuner-on-board designs

- On-chip RSSI and temperature sensor provide fast, accurate scan and seek functions
- Excellent blocking performance offers static-free reception

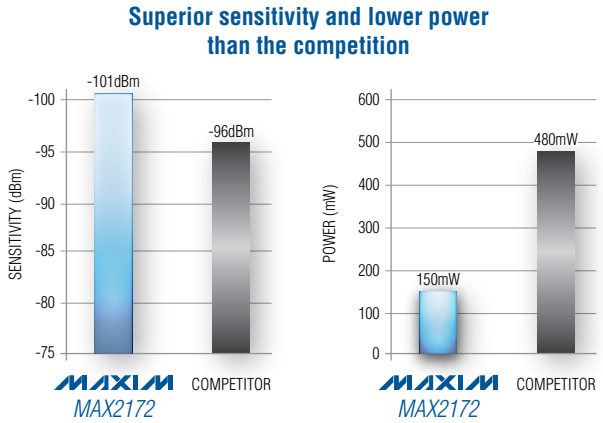

# Highly integrated, highly versatile car active-antenna solutions improve functionality and save space and cost

## MAX2180
## AM/FM car antenna LNA

- Automatic gain control (AGC) and adjustable AGC attack point facilitate very versatile active AM/FM antenna solution for any automotive application
- Highly integrated architecture eliminates need for expensive, unpredictable pin diodes at LNA input
- Cutting-edge CMOS process provides a 9V to 24V operating voltage range

## MAX2670*
## Dual-stage LNA for GPS/GNSS

- High integration eliminates large, expensive, discrete transistor solutions
- Ultra-low noise figure (1dB, first stage) provides fast GPS lock
- Highly versatile design allows external filtering between first and second stage, providing flexibility for system optimization

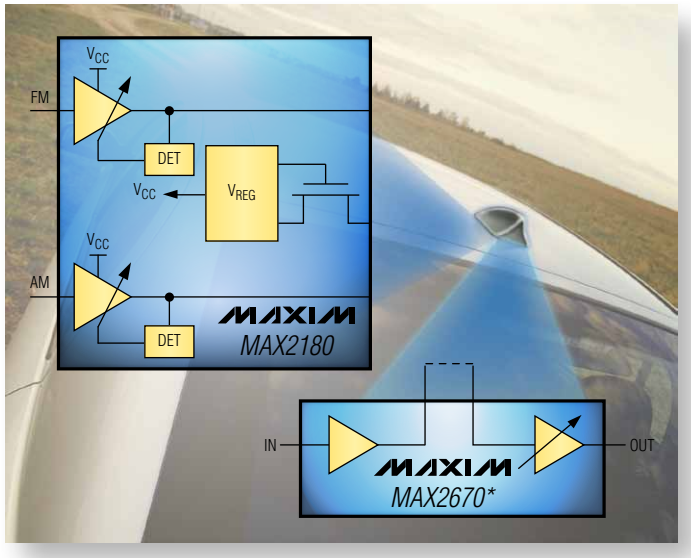


*Future product—contact factory for availability.

# 4-channel video decoder simplifies automotive vision systems

## Converts video signals to optimal frame-synchronized digital format needed for direct connection to Maxim's H.264 codec family

| Key Features | Benefits |
|---|---|
| On-chip DDR2 memory controller for frame-interleaved, synchronous, multichannel output | • Eliminates need for FPGA on video input<br>• Reduces system cost and design complexity with glueless, direct connection to Maxim's family of H.264 video processors |
| 4-channel NTSC/PAL video decoder subsystem | • Integrates video capture and digital conversion into one IC to greatly simplify PCB design and reduce component count and cost |

**Simplifies designs and reduces cost**

- Excellent video quality from 4-channel NTSC/PAL video decoder with 54MHz, 10-bit ADC and 5-line filter
- Flexible video output with byte- or frame-interleaving modes at 27/54/108MHz
- Multichip cascade configuration with direct connection
- Independent auto-equalizer processing for each video channel
- Individual video scalers for each video channel

# High-performance video decoder delivers excellent digital video quality for automotive safety and entertainment

## Meets automotive market's strict requirements for operating temperature, cost, and ease of use

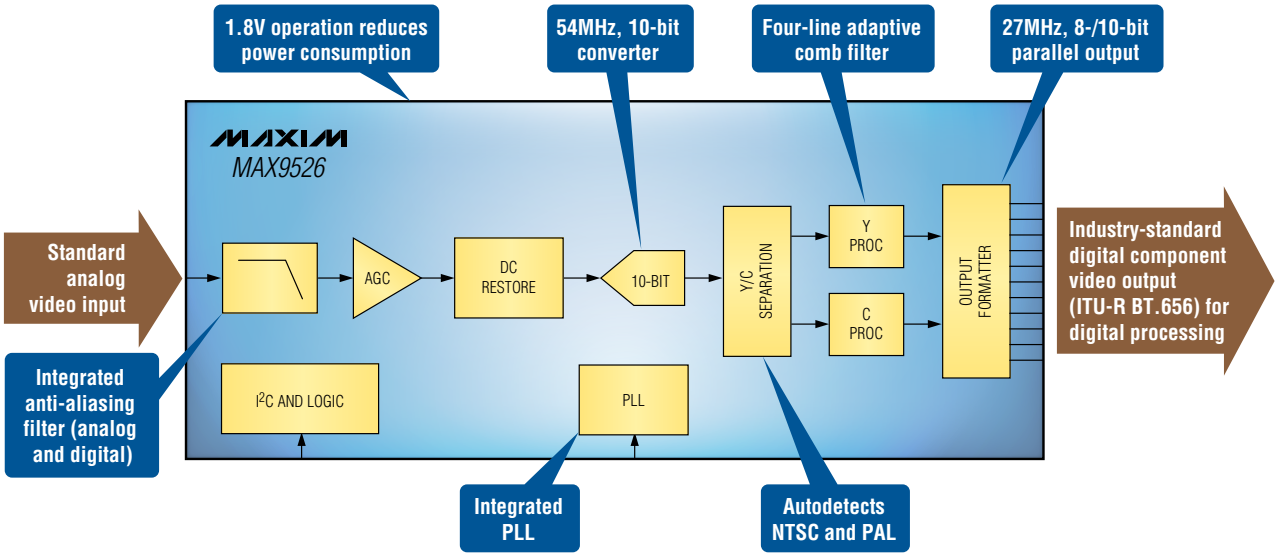


### Provides excellent video quality

- 54MHz, 10-bit ADC
- 4x oversampling (54MHz)
- Multiline adaptive comb filter
- Internal anti-aliasing filter

### Satisfies automotive requirements

- -40°C to +125°C operating temperature range
- Under 200mW typical power dissipation

### Offers ease of use

- Only 16 user-programmable registers
- Autoselects NTSC or PAL input analog video signal (all local variations)
- Auto or manual TV standard selection through I²C interface

### NTSC/PAL video decoder comparison

| Part | Package Size ($mm^2$) | Operating Power (mW) | Digital I/O (V) | Temperature Range (°C) | Price† ($) |
|---|---|---|---|---|---|
| **MAX9526** | **30** | **200** | **1.7 to 3.5** | **-40 to +125** | **2.75** |
| Competitor A | 144 | 335 | 3.0 to 3.5 | 0 to +70 | 3.99 |
| Competitor B | 36 | 250 | 3.0 to 3.5 | -40 to +85 | 5.77 |

†1000-up recommended resale. Prices provided are for design guidance and are FOB USA. International prices will differ due to local duties, taxes, and exchange rates. Not all packages are offered in 1k increments, and some may require minimum order quantities.

# Space-saving 300MHz to 1500MHz LNA extends range of automotive RKE systems

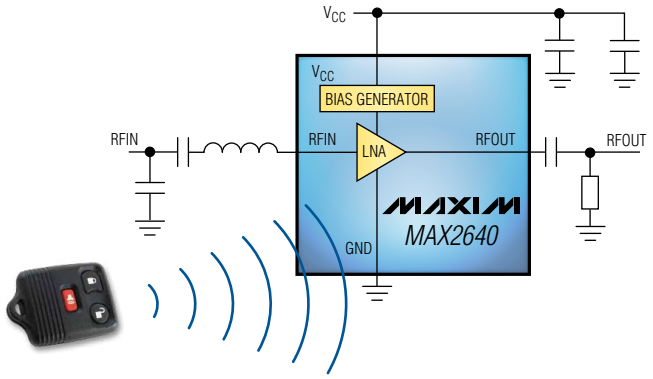


**High performance, improves range**

- 3.5mA supply current
- 2.7V to 5.5V single supply
- 0.9dB NF with matching components
- 15dB gain
- Tunable to 308, 315, 345, 433.92, 868, and 902 to 928MHz

**AEC-Q100 Grade 1 qualified**

- -40°C to +125°C automotive temp range

**Saves space**

- Internally biased to eliminate the need for external bias resistors and chokes
- 2.8mm x 2.9mm, 6-pin SOT23

# 0.8dB noise figure, 20dB gain GPS LNA improves your existing solution

## Ultra-small leadless package saves size and cost

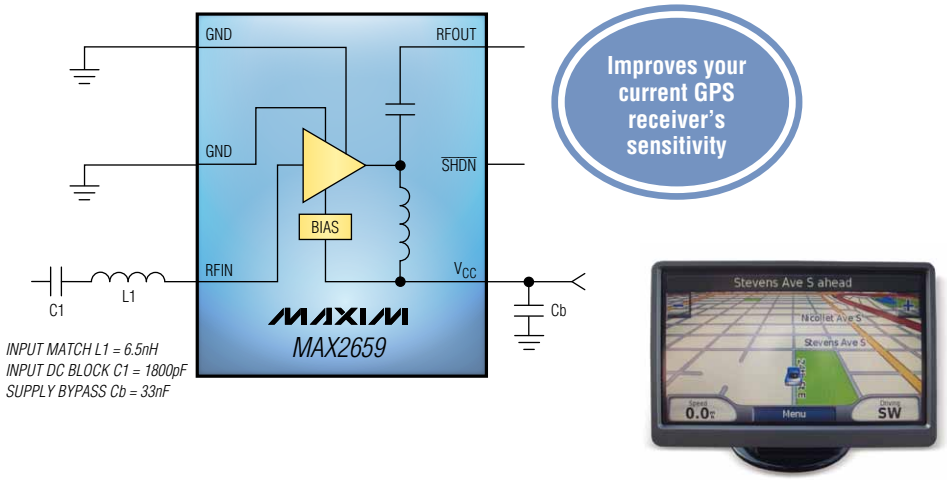


**Increases performance of existing solution**

- High 20.5dB gain
- Ultra-low 0.8dB noise figure
- 4.1mA supply current
- 1.6V to 3.3V supply voltage

**Saves space and reduces cost**

- Integrated 50Ω output-matching circuit
- Ultra-small, RoHS-compliant, lead-free, 1.5mm x 1.0mm, 6-pin µDFN package

# 300MHz to 450MHz transmitters and receivers double RKE system range

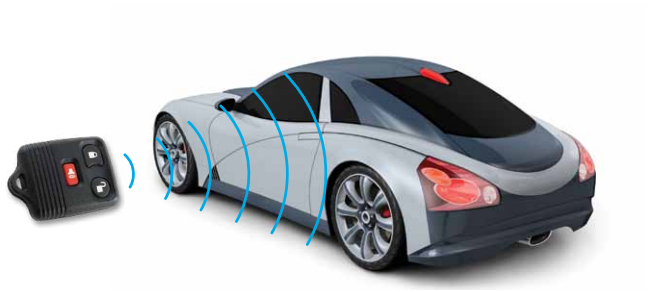

**Ideal for**

- RKE and remote start
- RF remote controls
- Security systems
- TPMS
- Garage-door openers

**Up to -114dBm receive sensitivity**

| Part | Type | Temp Range (°C) | Power Consumption (mA) | RF Performance at 315MHz | Modulation | Price† ($) |
|---|---|---|---|---|---|---|
| MAX7057 | Tx | -40 to +125 | 8.5 (typ) | +10dBm output, SPI tunable from 300MHz to 450MHz | ASK/FSK | 1.26 |
| MAX7058 | | | 8.0 (typ) | +10dBm output, dual frequency (315MHz and 390MHz) | ASK | 1.32 |
| MAX1472 | | | 5.3 (typ, ASK at 50% duty cycle) | +10dBm output | ASK | 0.96 |
| MAX7044 | | | 7.7 (typ, ASK at 50% duty cycle) | +13dBm output | ASK | 1.05 |
| MAX1479 | | | 6.7 (typ, ASK at 50% duty cycle) | +10dBm output | ASK/FSK | 0.97 |
| MAX1470 | Rx | -40 to +85 | 5.5 (typ) | -112dBm with 53dB image rejection | ASK | 1.51 |
| MAX1473 | | -40 to +85 | 5.2 (typ) | -114dBm with 50dB image rejection | | 1.67 |
| MAX7033 | | -40 to +105 | 5.2 (typ) | | | 1.69 |
| MAX7034 | | -40 to +125 | 6.7 (typ) | | | 2.50 |
| MAX1471 | | | 7.0 (typ) | -114dBm (ASK)/-108dBm (FSK) with 45dB image rejection | ASK/FSK | 2.39 |
| MAX7042 | | | 6.2 (typ) | -110dBm with 45dB image rejection | FSK | 1.80 |

# Industry's highest performance 300MHz to 450MHz transceivers

## Increase range and add two-way capabilities to car alarms, RF modules, and remote controls

Maxim's MAX7030/MAX7031/MAX7032 crystal-referenced VHF/UHF transceivers are easy-to-use, high-performance devices that allow quick, two-way implementation of one-way systems.

- -114dBm (ASK)/-110dBm (FSK) Rx sensitivity
- +10dBm output power
- 12mA Tx current (FSK)
- 6.1mA Rx current
- -40°C to +125°C automotive temp range

| Part | RF (MHz) | Modulation | FSK Deviation (kHz) |
|---|---|---|---|
| MAX7030LATJ | 315 | ASK | — |
| MAX7030HATJ | 433.92 | | — |
| MAX7031LATJ | 308 | FSK | ±51.4 |
| MAX7031MATJ50 | 315 | | ±49.5 |
| MAX7031HATJ17 | 433.92 | | ±17.2 |
| MAX7031HATJ51 | 433.92 | | ±51.7 |
| MAX7032 | SPI programmable | ASK/FSK | SPI programmable |

†1000-up recommended resale. Prices provided are for design guidance and are FOB USA. International prices will differ due to local duties, taxes, and exchange rates. Not all packages are offered in 1k increments, and some may require minimum order quantities.

# Industry's first integrated two-wire, Hall-effect sensor interface solution

## Improves reliability and performance while saving cost

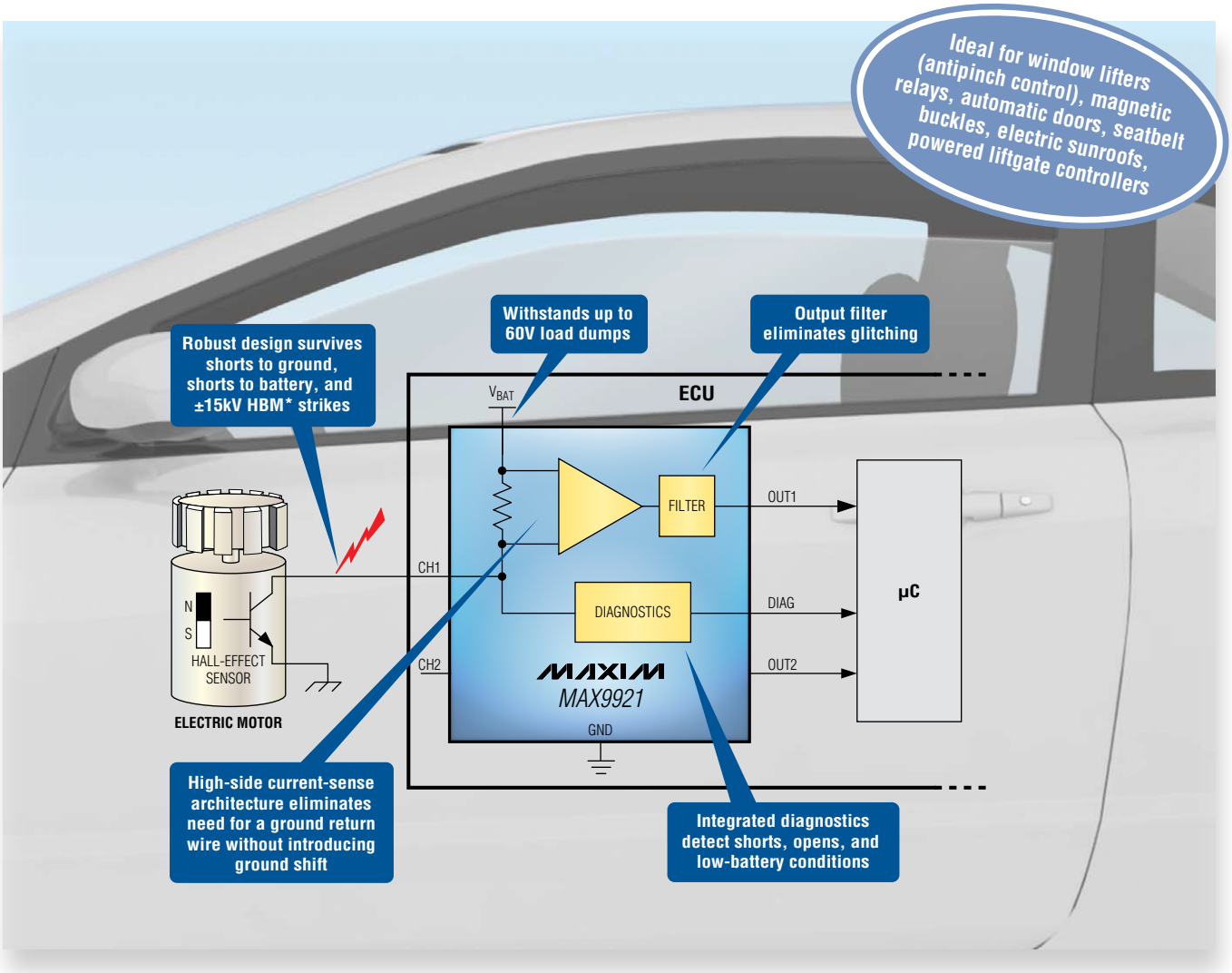


### Improves performance and reliability

- Integrated diagnostics detect shorts, opens, and low-battery faults
- Withstands up to 60V load dumps
- Robust ±15kV HBM ESD protection
- Integrated deglitching output filters
- Single-wire interface is immune to ground-shift voltages

### Saves space and cost

- High-side, current-sense architecture eliminates the need for a ground return wire
- Eliminates up to 10 discrete components
- Integrates two complete sensor interface channels into a single 3mm x 5mm, 10-pin µMAX® package

µMAX is a registered trademark of Maxim Integrated Products, Inc.
*Human Body Model

# Rugged amplifiers and comparators are ideal for your automotive analog-controlled systems

## High-voltage signal conditioners and sensor signal interface ICs operate in extreme environments up to +125°C

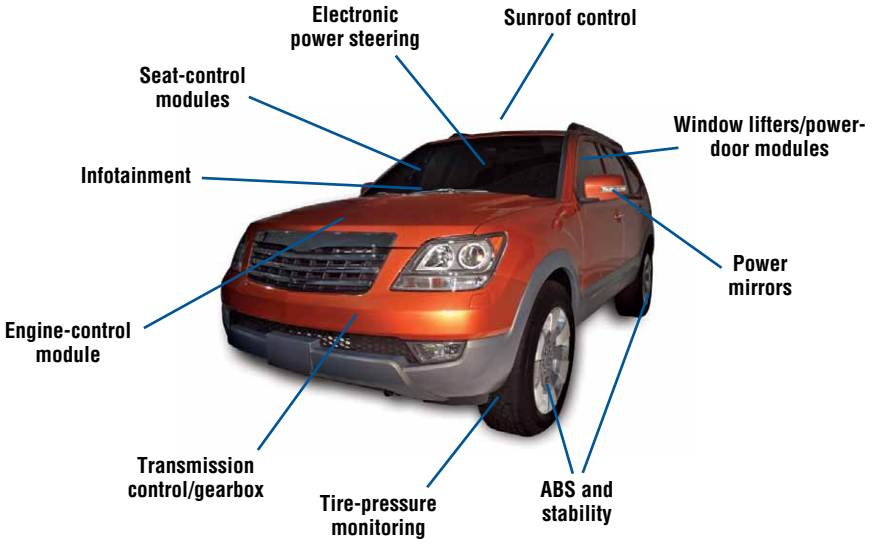


### Operational amplifiers

| Part | No. of Amps | Rail-to-Rail Input or Output | Supply-Voltage Range (V) | Supply Current per Amp (mA) | GBWP (MHz) | Auto Temp Range* | Features |
|---|---|---|---|---|---|---|---|
| MAX4036A/38A | 1/2 | Output | 2.3 to 7 | 0.0008 | 0.004 | | Low supply current (800nA) |
| MAX4230–34 | 1/2/4 | Input, output | 2.7 to 5.5 | 1.1 | 10 | ✓** | Built-in RF immunity |
| MAX4245/46/47 | 1/2/2 | Input, output | | 0.375 | 1 | ✓ | Low-power shutdown (50nA) |
| MAX4400–03 | 1/2/4 | Output | | 0.32 | 0.8 | ✓ | Shutdown mode |
| MAX4475–78 | | Output | | 2.5 | 10 | ✓** | Low distortion (0.0002% THD+N) |
| MAX4480–83 | | Output | | 0.045 | 0.14 | ✓ | Micropower current consumption (0.5µA) |
| MAX4484/86/87 | | Output | | 1.9 | 7 | ✓ | Unity-gain stable, no phase reversal |
| MAX4490/91/92 | | Input, output | | 0.8 | 10 | ✓** | High slew rate (10V/µs) |
| MAX4493/94/95 | | Output | 4.5 to 11 | 0.77 | 5 | ✓** | Small package (SC70) |

### Current-sense amplifiers

| Part | CMVR (V) | Supply-Voltage Range (V) | Supply Current (µA) | Bidirectional Current Sense | GBWP (kHz) | Auto Temp Range* | Features |
|---|---|---|---|---|---|---|---|
| MAX4069–72 | 1.35 to 24 | 2.7 to 24 | 100 | ✓ | 40, 100 | ✓ | 1.5% total output error |
| MAX4073F/73H/73T | 2 to 28 | 3 to 28 | 500 | | 1600, 1700, 1800, 1800 | ✓ | ±1% accuracy, SC70 |
| MAX4376/77/78 | 0 to 28 | 3 to 28 | 1000 | | 1200, 1700, 2000, 2000 | ✓** | ±0.5% accuracy |
| NEW MAX9918–20 | -20 to +76 | 4.5 to 5.5 | 1000 | ✓ | 75 to 230 | ✓** | ±0.6% accuracy |

### Comparators

| Part | No. of Comparators | Supply-Voltage Range (V) | Supply Current (µA) | Propagation Delay (ns) | Logic Output | Auto Temp Range* | Features |
|---|---|---|---|---|---|---|---|
| MAX919/20 | 1 | 1.8 to 5.5 | 0.8 | 22000 | CMOS/TTL | | Nanopower (750nA), 1.245V ±1.5% REF |
| MAX9021/22/24 | 1/2/4 | 2.5 to 5.5 | 5 | 3000 | CMOS/TTL | ✓ | Hysteresis for low-power, rail-to-rail output |
| MAX9140/41/42/44 | 1/1/2/4 | 2.7 to 5.5 | 320 | 40 | CMOS/TTL | ✓ (**, MAX9140A only) | 500µV offset voltage |

*Automotive temperature range: -40°C to +125°C
**AEC-Q100 Grade 1 qualified

# Low-power, flexible stand-alone conditioner provides capacitive proximity sensing while saving space and cost

The MAX1441 proximity and touch-sensor IC is designed for capacitive proximity sensing in automotive passive remote keyless entry (PRKE) and other applications. This device provides all of the signal processing functions needed to support two independent touch/proximity sensor channels. It also eliminates 12 external components, reducing solution size and cost by over 30% as compared to the nearest competitive solution.

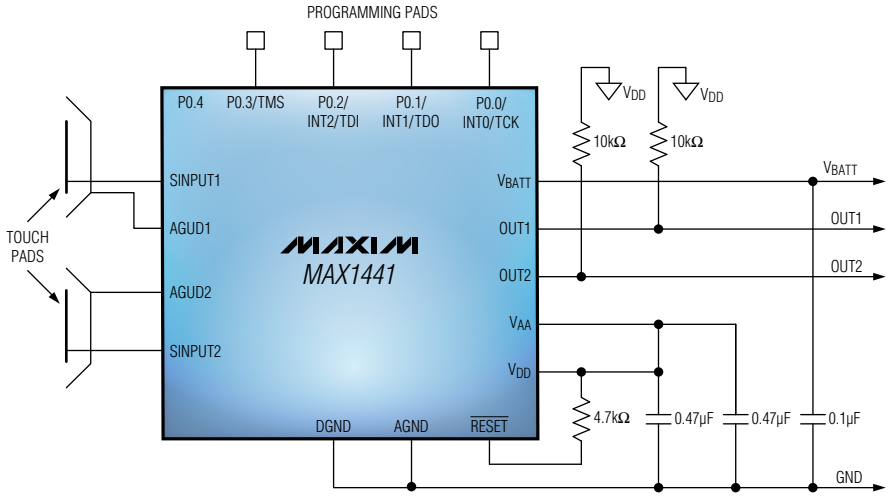


**Flexibility at NO additional cost**

- Low 100µA operating current extends battery life in PRKE applications
- Programmable microcontroller allows adaptation to changes in the environment
- Adjustable excitation frequency prevents jamming and increases noise immunity
- Programmable spread-spectrum modulation reduces EMI

# Heavy on features, light on cost

## Optimize your automotive design with Maxim's family of low-cost, low-power ADCs!

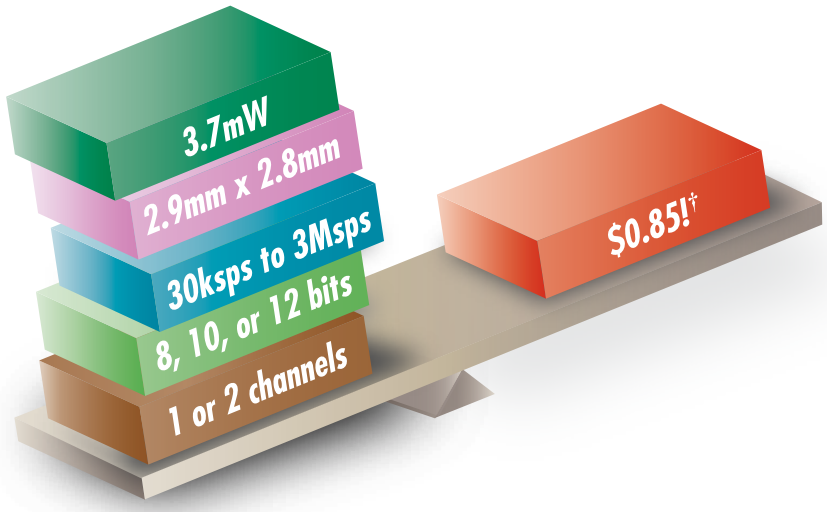


### Extend battery life

- 3.7mW active; 3.9µW power-down

### Save space and cost

- Footprints as small as 2.9mm x 2.8mm
- Priced as low as $0.85†

| Part | Resolution (Bits) | Speed (Msps, max) | SNR (dB) | Power (mW) | Package |
|---|---|---|---|---|---|
| MAX11103 | 12 | 3 | 72 | 5.2 | µMAX, TDFN |
| MAX11102 | | 2 | | 3.7 | |
| MAX11105 | | | | | SOT23 |
| MAX11106 | 10 | 3 | 61 | 5.2 | TDFN |
| MAX11117 | | | | | SOT23 |
| MAX11110 | | 2 | | 3.7 | |
| MAX11111 | 8 | 3 | 49 | 5.2 | TDFN |
| MAX11116 | | | | | SOT23 |
| MAX11115 | | 2 | | 3.7 | |

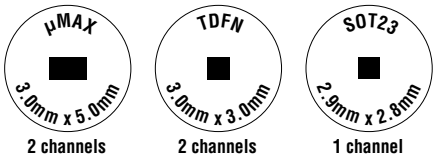


†MAX11115,1000-up recommended resale. Prices provided are for design guidance and are FOB USA. International prices will differ due to local duties, taxes, and exchange rates. Not all packages are offered in 1k increments, and some may require minimum order quantities.

# Spread-spectrum EconOscillator™ ICs reduce peak EMI by over 20dB for GPS and automotive infotainment

## Factory-trimmed frequency and dither settings reduce time to market

Most applications must meet the stringent radiated-emissions compliance standards established by government agencies. Yet, most crystal oscillators (XOs) do not offer inherent EMI reduction, forcing designers to use expensive shielding, filtering, or PCB-layout techniques to meet these EMI-compliance standards. Our spread-spectrum EconOscillator devices solve this problem by spreading radiated emissions over a narrow spectrum, thus reducing peak energy at any one frequency. These oscillators are ideal for use as a frequency source for µPs in applications with RS-232, USB, CAN, or LIN peripherals, including automotive infotainment/GPS.

**> 20dB EMI improvement over XOs (DS1089L)**

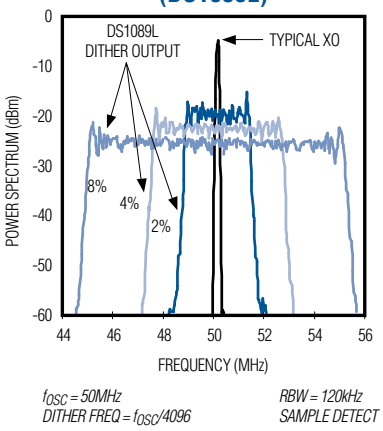


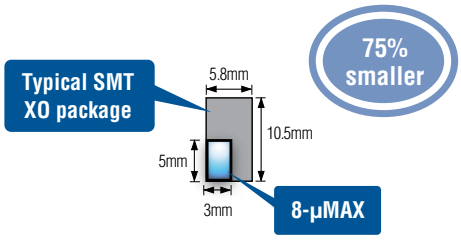


- Reduce peak EMI by over 20dB
- 75% smaller than typical SMT XO
- Lower active and standby power than typical XO
- Fast, reliable startup
- Less sensitive to shock/vibration than typical XO
- Operate over automotive temperature range
- No price premium for higher frequency selections
- Factory trimmed; no programming required
- No external timing components required

| Part | Min Output Freq (kHz) | Max Output Freq (MHz) | Spread Spectrum | Dither-Mag Range (%) | Dither-Freq Range ($f_{OSC}$/x) | Power Supply (V) | Temp Range (°C) | Package |
|---|---|---|---|---|---|---|---|---|
| DS1086 | 260 | 133 | Down | 0 to -4 | 4096 | 5 | 0 to +70 | 8-SO |
| DS1086L | 130 | 66.6 | Down | 0 to -8 | 2048 to 8192 | 2.7 to 3.6 | -40 to +85 | 8-µMAX |
| DS1087L | 130 | 66.6 | Down | 0 to -4 | 4096 | 2.7 to 3.6 | | |
| DS1089L | 130 | 66.6 | Centered | 0 to ±8 | 2048 to 8192 | 2.7 to 3.6 | | |
| DS1090 | 125 | 8 | Centered | 0 to ±4 | 512 to 4096 | 2.7 to 5.5 | | |
| DS1091L | 130 | 66.6 | Centered, down | 0 to ±4, 0 to -8 | 16 to 8192 | 3.0 to 3.6 | -40 to +125 | |
| DS1094L | 31.25 | 2 | Down | 0 to -8 | 128 to 1024 | 3.0 to 3.6 | -40 to +85 | |

EconOscillator is a trademark of Maxim Integrated Products, Inc.

# Maxim's products satisfy the quality needs of the automotive market

## Automotive "V" flow drives products to zero defects

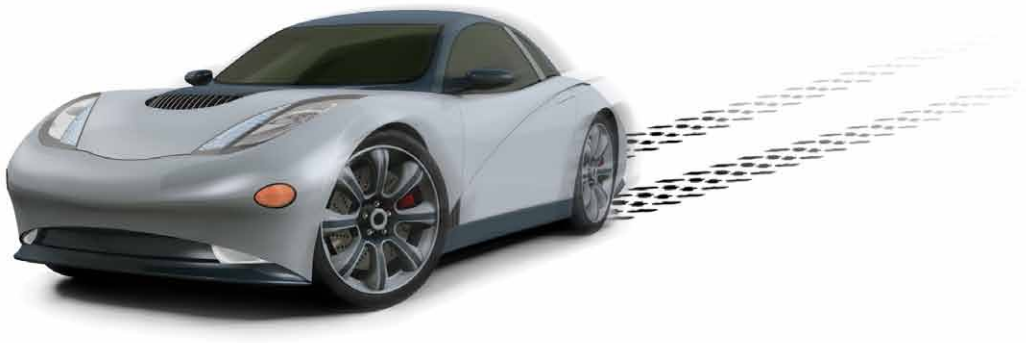

**Distinctive attributes of Maxim's vehicle ("V") flow**

- Full ISO/TS 16949:2002- and ISO 9001:2008-Certified Quality Management System
- Full ISO 14001:2004-Certified Environmental Management System
- AEC-Q100-qualified parts for specified temperature grades
- Statistical process controls to Cpk ≥ 1.67 on all key parameters
- Production Part Approval Process (PPAP) available
- Restriction to a maximum of two qualified production sites for wafer, assembly, and test
- Global failure-analysis support centers improve customer support
- Worldwide field quality support—Europe, Asia, Japan, and North America
- Limited product change control system and extended PCN horizons

**Select Maxim's "V" products, like the MAX2141ETH/V+, to receive AEC-Q100-qualified automotive parts**
**www.maxim-ic.com/V-flow**

# Maxim has your automotive IC quality covered

| | |
|---|---|
| AEC-Q100 | **AEC-Q100 reliability reports**<br>Our reliability testing is extensive and fully compliant to AEC-Q100. All reliability reports are readily available on our website. |
| PPAP | **PPAP library and request form**<br>Our automotive ICs meet the stringent AIAG Production Part Approval Process (4th edition) requirements. To date, our dedicated team has delivered over 700 customer-specific PPAPs. |
| ISO/TS 16949 | **Fully ISO/TS 16949:2002 certified**<br>Complying with strict automotive quality standards, we are fully ISO/TS 16949:2002 certified. |
| FIT rate PPM | **Reliability calculator**<br>Calculate the FIT rate and PPM (with confidence interval) for your specific sample size. |
| EMI ESD | **Rugged ICs for harsh environments**<br>Acquire samples of automotive products with low EMI ratings and/or rugged ESD protection. |

**Review our quality resources at:**
**www.maxim-ic.com/auto/quality**

Innovation Delivered and Maxim are registered trademarks of Maxim Integrated Products, Inc. © 2010 Maxim Integrated Products, Inc. All rights reserved.

Automotive-5 US 10/10

MAXIM
INNOVATION DELIVERED®

**www.maxim-ic.com**
Maxim Integrated Products, Inc.
120 San Gabriel Drive
Sunnyvale, CA 94086