SMA系列是应用非常广泛的小型螺纹式同轴连接器。具有良好的可靠性、机械强度、耐用性和极佳的电气性能。主要用于移动通讯设备和电子通讯仪器中连接射频电路。

界面尺寸和技术特性符合MIL-C-39012，IEC169-15和 CECC22110规范要求。

Series SMA are very popular thread coupling miniature coaxial connectors. Which have the excellent performances of high reliability, high mechanical strength, high durability, and optimum electrical properties. are widely used to connect RF coaxial cables for mobile communication equipments and electronic communicaion instruments.
The interface dimensions and technical characteristics are in accord with the specifications of MIL-C-39012.IEC 169-15 and CECC 22110.

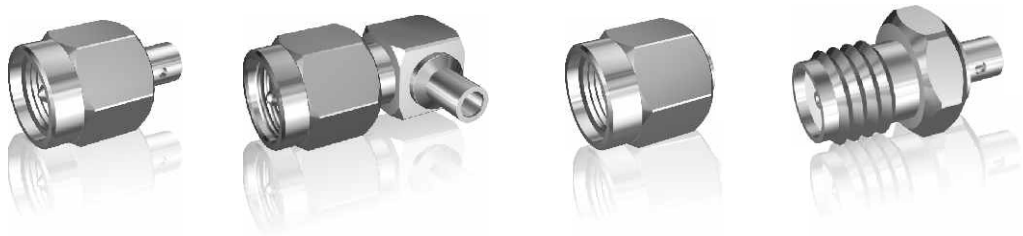

| 主要技术特性 | | | KEY PERFORMANCE | | |
|---|---|---|---|---|---|
| 温度范围<br>Temperature range | | -65～+165℃ | 绝缘电阻<br>Insulation resistance | | ≥5000MΩ |
| 特性阻抗<br>Characteristic impedancd | | 50Ω | 介质耐压<br>Dielectric Withstanding voltage | | 1000V(rms) |
| 频率范围<br>Frequency range | 配软电缆<br>With flexible cable | 0～12.4GHz | 接触电阻<br>Contact resistance | 中心导体<br>Center conductor | ≤3mΩ |
| | 配半刚、半柔性电缆<br>With semi-rigid/flexible cable | 0～18GHz | | 外导体<br>Outer conductor | ≤2mΩ |
| 电压驻波比<br>VSWR | 配软电缆<br>With flexible cable | ≤1.15+ 0.02F | 寿　命<br>Durability | | 500次 |
| | 配半刚、半柔性电缆<br>With semi-rigid/flexible cable | ≤1.05+ 0.02F | | | |

| 材料与涂覆 | MATERIAL AND PLATING |
|---|---|
| 壳 体<br>Body | 黄铜镀硬金或不锈钢表面钝化<br>Brass,gold plated or stainless steel passivated |
| 插 针<br>Male center contacts | 黄铜镀硬金<br>Brass,gold plated |
| 插 孔<br>Female center contacts | 铍青铜镀硬金<br>Beryllium copper ,gold plated |
| 绝缘体<br>Insulators | 聚四氟乙烯<br>PTFE |
| 密封件<br>Gaskets | 硅橡胶<br>Silicon rubber |
| 压接套<br>Crimp ferrules | 铜合金镀镍或镀金<br>Copper alloy,gold or nickel plated |

## 界面尺寸 (mm)　Interface Dimensions in mm

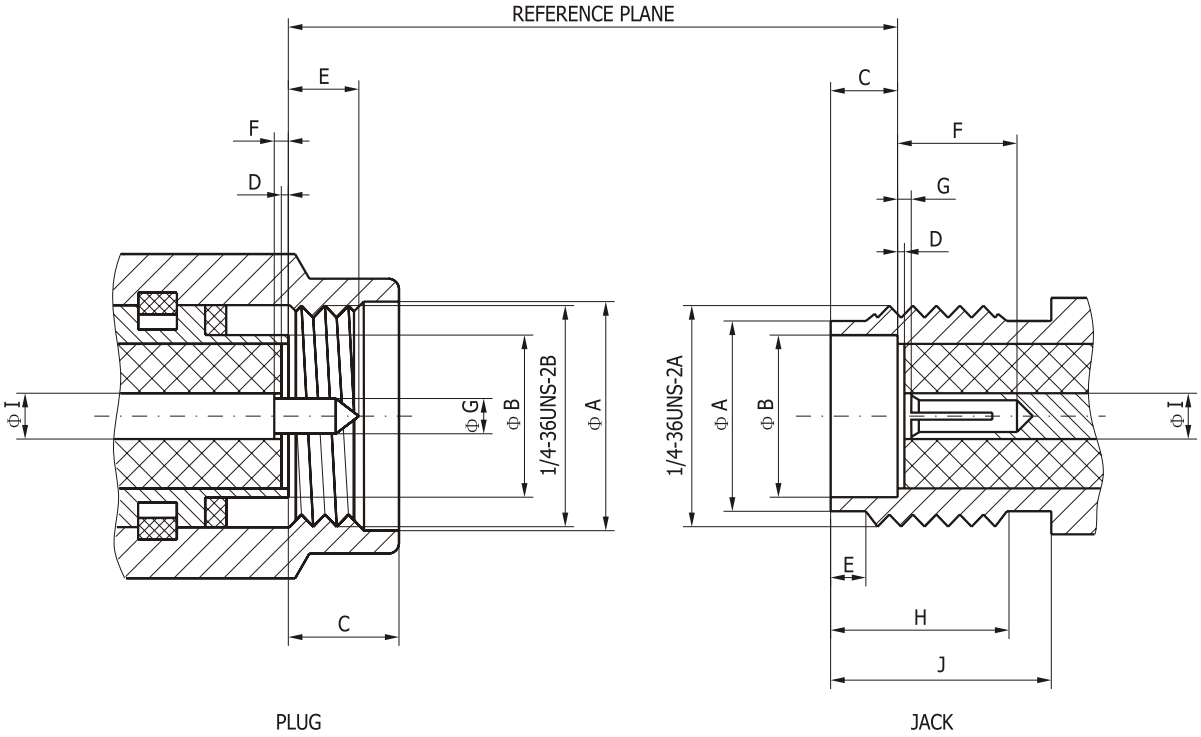


| | 插头 / Plug(male) | | 插座 / Jack(female) | |
|---|---|---|---|---|
| 代　号 Letter | 最　小 Minimum | 最　大 Maximum | 最　小 Minimum | 最　大 Maximum |
| A | 6.35 | 6.73 | 5.28 | 5.49 |
| B | 4.53 | 4.59 | 4.60 | 4.70 |
| C | 2.54 | 3.43 | 1.88 | 1.98 |
| D | 0.00 | 0.18 | 0.00 | 0.18 |
| E | 1.91 | 2.54 | 0.38 | 1.14 |
| F | 0.00 | 0.25 | 2.92 | — |
| G | 0.90 | 0.94 | 0.00 | 0.25 |
| H | — | — | 4.32 | — |
| I | 1.24 | — | 1.24 | 1.30 |
| J | — | 1.30 | 5.54 | — |

直式法兰安装插座 Straight Flange Jacks

| 产品编码 Product No. | 产品名称 Pruduct type | 安装尺寸 Mounting Hole | 备注 Notes |
|---|---|---|---|
| 182A-0003 | SMA-KFD1 | H68 | L1=8.0 L2=1.4 h=0.6 |
| 182A-0004 | SMA-KFD2 | H68 | L1=2.4 L2=1.6 h=0.6 |
| 182A-0005 | SMA-KFD18 | H68 | L1=2.5 L2=1.6 h=0.2 |
| 182A-0006 | SMA-KFD35 | H68 | L1=1.0 L2=1.0 h=0.4 |
| 182A-0007 | SMA-KFD36 | H68 | L1=1.0 L2=1.0 h=0.2 |

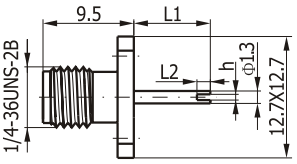

直式法兰安装插座 Straight Flange Jacks

| 产品编码 Product No. | 产品名称 Pruduct type | 安装尺寸 Mounting Hole | 备注 Notes |
|---|---|---|---|
| 182A-0008 | SMA-KFD3 | H52 | L1=15.0 L2=3.0 A=1.3 |
| 182A-0009 | SMA-KFD5A | H52 | L1=4.0 L2=2.0 A=1.3 |
| 182A-0010 | SMA-KFD5B | H52 | L1=3.2 L2=2.0 A=1.3 |
| 182A-0011 | SMA-KFD21 | H52 | L1=2.0 L2=4.0 A=1.3 |
| 182A-0012 | SMA-KFD46 | H52 | L1=4.0 L2=3.0 A=1.3 |
| 182A-0013 | SMA-KFD57 | H52 | L1=5.0 L2=3.0 A=0.8 |
| 182A-0014 | SMA-KFD84 | H52 | L1=3.0 L2=3.0 A=1.3 |
| 182D-0001 | SMA-KFD84G | H52 | L1=3.0 L2=3.0 A=1.3 |
| 182A-0015 | SMA-KFD102 | H52 | L1=5.0 L2=3.0 A=1.3 |
| 182A-0016 | SMA-KFD143 | H52 | L1=12.2 L2=4.0 A=1.3 |
| 182A-0002 | SMA-KFD147G | H52 | L1=3.2 L2=2.0 A=1.3 |
| 182A-0017 | SMA-KFD157 | H52 | L1=20.0 L2=5.0 A=1.3 |
| 182A-0018 | SMA-KFD189 | H52 | L1=6.0 L2=2.0 A=1.3 |
| 182A-0019 | SMA-KFD203 | H52 | L1=4.0 L2=8.0 A=1.3 |
| 182A-0020 | SMA-KFD205 | H52 | L1=62.0 L2=9.5 A=1.3 |

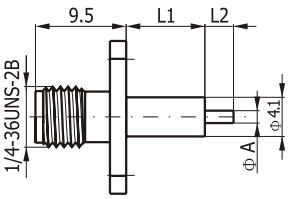


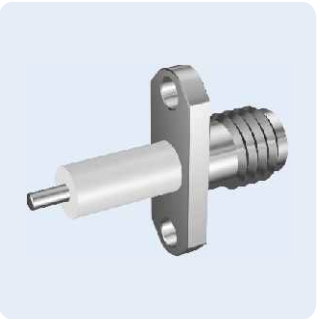

直式法兰安装插座 Straight Flange Jacks

| 产品编码 Product No. | 产品名称 Pruduct type | 安装尺寸 Mounting Hole | 备注 Notes |
|---|---|---|---|
| 182A-0021 | SMA-KFD7 | H71 | |

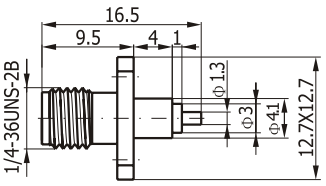


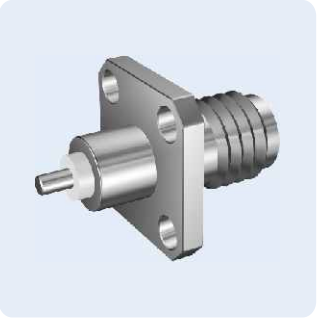

直式法兰安装插座 Straight Flange Jacks

| 产品编码 Product No. | 产品名称 Pruduct type | 安装尺寸 Mounting Hole | 备注 Notes |
|---|---|---|---|
| 182A-0022 | SMA-KFD5 | H71 | L1=4.0 L2=2.0 A=1.3 |
| 182A-0023 | SMA-KFD6 | H71 | L1=9.0 L2=2.0 A=1.3 |
| 182A-0024 | SMA-KFD22 | H71 | L1=15.0 L2=3.0 A=1.3 |
| 182A-0025 | SMA-KFD23 | H71 | L1=4.0 L2=0.6 A=0.4 |
| 182A-0026 | SMA-KFD43 | H71 | L1=4.0 A=1.3 L2=8.0 |
| 182A-0027 | SMA-KFD83 | H71 | L1=2.4 L2=2.5 A=1.3 |
| 182A-0028 | SMA-KFD85 | H71 | L1=13.0 L2=5.0 A=1.3 |
| 182A-0029 | SMA-KFD91 | H71 | L1=1.6 L2=13.1 A=1.3 |
| 182A-0030 | SMA-KFD103 | H71 | L1=7.5 A=0.4 L2=2.0 |
| 182A-0031 | SMA-KFD177 | H71 | L1=8.0 L2=3.0 A=1.3 |
| 182A-0032 | SMA-KFD178 | H71 | L1=5.0 L2=4.2 A=1.3 |
| 182A-0033 | SMA-KFD197 | H71 | L1=12.0 L2=2.0 A=1.3 |
| 182A-0034 | SMA-KFD201 | H71 | L1=9.0 A=0.4 L2=5.5 |

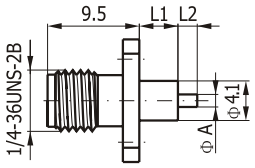

直式法兰安装插座 Straight Flange Jacks

| 产品编码 Product No. | 产品名称 Pruduct type | 安装尺寸 Mounting Hole | 备注 Notes |
|---|---|---|---|
| 182A-0035 | SMA-KFD8 | H71 | A=1.0 |
| 182A-0036 | SMA-KFD44 | H71 | A=0.6 |

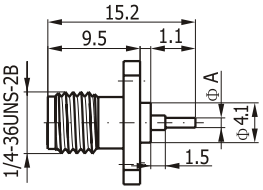


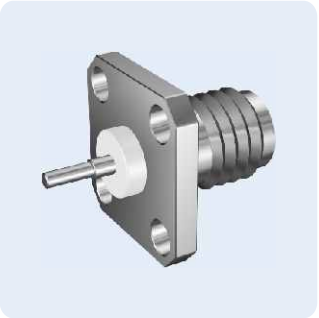

直式法兰安装插座 Straight Flange Jacks

| 产品编码 Product No. | 产品名称 Pruduct type | 安装尺寸 Mounting Hole | 备注 Notes |
|---|---|---|---|
| 182A-0037 | SMA-KFD9 | H73 | L1=2.4 |
| 182A-0038 | SMA-KFD10 | H73 | L1=3.2 |
| 182A-0039 | SMA-KFD11 | H73 | L1=4.8 |
| 182A-0040 | SMA-KFD12 | H73 | L1=4.0 |
| 182A-0041 | SMA-KFD87 | H73 | L1=3.0 |

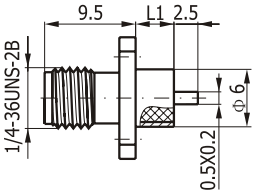


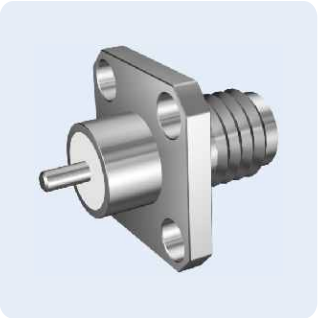

直式法兰安装插座 Straight Flange Jacks

| 产品编码 Product No. | 产品名称 Pruduct type | 安装尺寸 Mounting Hole | 备注 Notes |
|---|---|---|---|
| 182A-0042 | SMA-KFD13 | H71 | L1=4.0 |
| 182A-0043 | SMA-KFD14 | H71 | L1=3.2 |
| 182A-0044 | SMA-KFD45 | H71 | L1=2.4 |

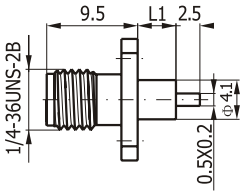

直式法兰安装插座 Straight Flange Jacks

| 产品编码 Product No. | 产品名称 Pruduct type | 安装尺寸 Mounting Hole | 备注 Notes |
|---|---|---|---|
| 182A-0045 | SMA-KFD15 | H71 | H=0.4 L1=2.0 L2=2.0 |
| 182A-0046 | SMA-KFD28 | H71 | H=0.2 L1=3.0 L2=2.5 |

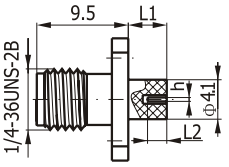

直式法兰安装插座 Straight Flange Jacks

| 产品编码 Product No. | 产品名称 Pruduct type | 安装尺寸 Mounting Hole | 备注 Notes |
|---|---|---|---|
| 182A-0047 | SMA-KFD17 | H52 | |

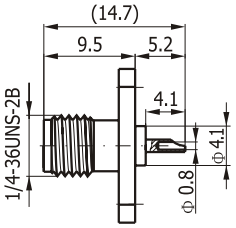

直式法兰安装插座 Straight Flange Jacks

| 产品编码 Product No. | 产品名称 Pruduct type | 安装尺寸 Mounting Hole | 备注 Notes |
|---|---|---|---|
| 182D-0003 | SMA-KFD19AG | H54 | |

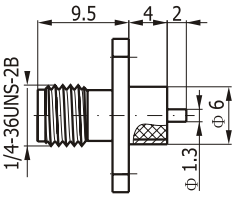

## 法兰安装连接器 Flange Mount Connectors

直式法兰安装插座 Straight Flange Jacks

| 产品编码 Product No. | 产品名称 Pruduct type | 安装尺寸 Mounting Hole | 备注 Notes |
|---|---|---|---|
| 182A-0001 | SMA-KFD | H68 | A=5.2 L=14.7 |
| 182A-0002 | SMA-KFD65 | H68 | A=3.0 L=12.5 |

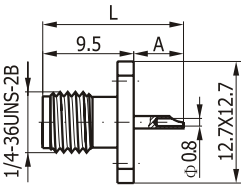

直式法兰安装插座　Straight Flange Jacks

| 产品编码 Product No. | 产品名称 Pruduct type | 安装尺寸 Mounting Hole | 备注 Notes |
|---|---|---|---|
| 182A-0048 | SMA-KFD19 | H73 | L1=4.0 L2=2.0 A=1.3 |
| 182A-0049 | SMA-KFD29 | H73 | L1=3.2 L2=3.0 A=1.3 |
| 182A-0050 | SMA-KFD54 | H73 | L1=2.4 L2=2.5 A=1.0 |
| 182A-0051 | SMA-KFD76 | H73 | L1=3.0 L2=1.5 A=0.7 |
| 182A-0052 | SMA-KFD95 | H73 | L1=4.0 L2=1.5 A=0.8 |
| 182D-0004 | SMA-KFD76AG | H73 | L1=3.0 L2=1.5 A=0.7 |
| 182A-0053 | SMA-KFD-2.5 | H73 | L1=2.5 L2=2.5 A=1.3 |

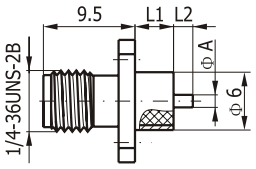

直式法兰安装插座　Straight Flange Jacks

| 产品编码 Product No. | 产品名称 Pruduct type | 安装尺寸 Mounting Hole | 备注 Notes |
|---|---|---|---|
| 182A-0054 | SMA-KFD20 | H50 | L=4.0 |
| 182A-0055 | SMA-KFD51 | H50 | L=2.5 |

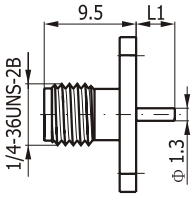

直式法兰安装插座　Straight Flange Jacks

| 产品编码 Product No. | 产品名称 Pruduct type | 安装尺寸 Mounting Hole | 备注 Notes |
|---|---|---|---|
| 182A-0056 | SMA-KFD24 | H53 | |

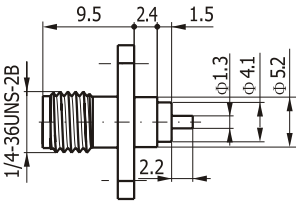

直式法兰安装插座　Straight Flange Jacks

| 产品编码 Product No. | 产品名称 Pruduct type | 安装尺寸 Mounting Hole | 备注 Notes |
|---|---|---|---|
| 182A-0057 | SMA-KFD26 | H68 | h=0.2 |
| 182A-0058 | SMA-KFD27 | H68 | h=0.4 |

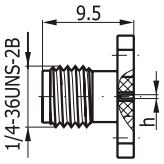

直式法兰安装插座 Straight Flange Jacks

| 产品编码 Product No. | 产品名称 Pruduct type | 安装尺寸 Mounting Hole | 备注 Notes |
|---|---|---|---|
| 182A-0059 | SMA-KFD19 | H73 | L1=4.0 L2=3.0 h=0.4 |
| 182A-0060 | SMA-KFD29 | H73 | L1=1.0 L2=1.0 h=0.4 |
| 182A-0061 | SMA-KFD54 | H73 | L1=4.0 L2=1.0 h=0.2 |

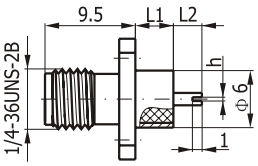


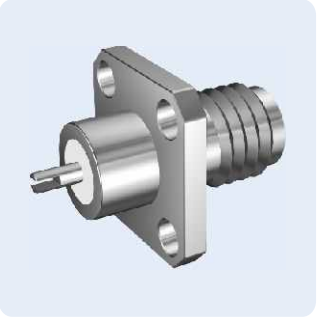

直式法兰安装插座 Straight Flange Jacks

| 产品编码 Product No. | 产品名称 Pruduct type | 安装尺寸 Mounting Hole | 备注 Notes |
|---|---|---|---|
| 182A-0062 | SMA-KFD31 | H53 | |

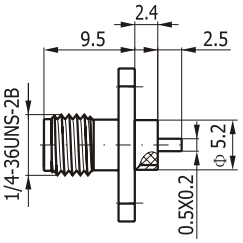

直式法兰安装插座 Straight Flange Jacks

| 产品编码 Product No. | 产品名称 Pruduct type | 安装尺寸 Mounting Hole | 备注 Notes |
|---|---|---|---|
| 182A-0063 | SMA-KFD32 | H68 | L1=2.5 |
| 182A-0064 | SMA-KFD33 | H68 | L1=1.4 |

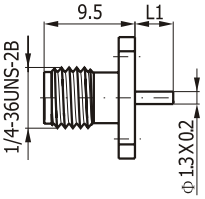

直式法兰安装插座 Straight Flange Jacks

| 产品编码 Product No. | 产品名称 Pruduct type | 安装尺寸 Mounting Hole | 备注 Notes |
|---|---|---|---|
| 182A-0065 | SMA-KFD38 | H68 | |

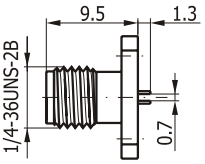

直式法兰安装插座 Straight Flange Jacks

| 产品编码 Product No. | 产品名称 Pruduct type | 安装尺寸 Mounting Hole | 备注 Notes |
|---|---|---|---|
| 182A-0066 | SMA-KFD39 | H68 | |

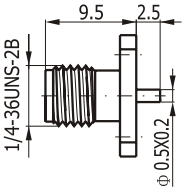


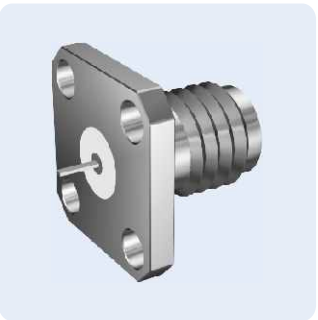

直式法兰安装插座 Straight Flange Jacks

| 产品编码 Product No. | 产品名称 Pruduct type | 安装尺寸 Mounting Hole | 备注 Notes |
|---|---|---|---|
| 182A-0067 | SMA-KFD40 | H71 | L1=4.0 L2=3.0 |
| 182A-0068 | SMA-KFD80 | H71 | L1=5.2 L2=2.8 |

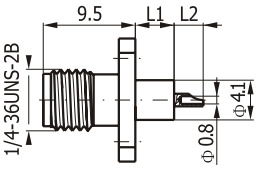


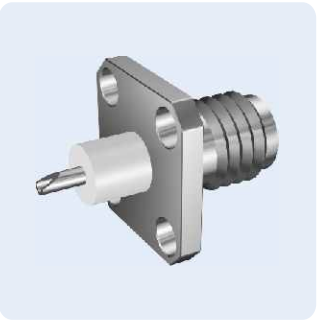

直式法兰安装插座 Straight Flange Jacks

| 产品编码 Product No. | 产品名称 Pruduct type | 安装尺寸 Mounting Hole | 备注 Notes |
|---|---|---|---|
| 182A-0069 | SMA-KFD42 | H72 | |

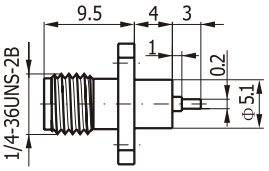

直式法兰安装插座 Straight Flange Jacks

| 产品编码 Product No. | 产品名称 Pruduct type | 安装尺寸 Mounting Hole | 备注 Notes |
|---|---|---|---|
| 182A-0070 | SMA-KFD53 | H68 | L1=2.6 A=2.9 |
| 182A-0071 | SMA-KFD93 | H68 | L1=2.8 * |

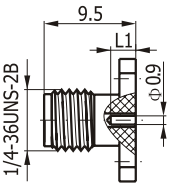

直式法兰安装插座 Straight Flange Jacks

| 产品编码 Product No. | 产品名称 Pruduct type | 安装尺寸 Mounting Hole | 备注 Notes |
|---|---|---|---|
| 182A-0072 | SMA-KFD55 | H50 | |

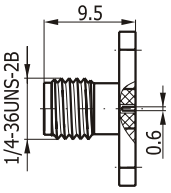

直式法兰安装插座 Straight Flange Jacks

| 产品编码 Product No. | 产品名称 Pruduct type | 安装尺寸 Mounting Hole | 备注 Notes |
|---|---|---|---|
| 182A-0073 | SMA-KFD69 | H52 | L1=2.5 L2=5.5 t=0.62 |
| 182A-0074 | SMA-KFD73 | H52 | L1=4.0 L2=5.6 t=0.55 |

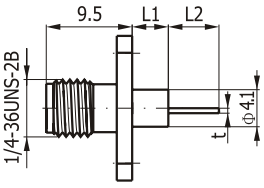

直式法兰安装插座 Straight Flange Jacks

| 产品编码 Product No. | 产品名称 Pruduct type | 安装尺寸 Mounting Hole | 备注 Notes |
|---|---|---|---|
| 182A-0075 | SMA-KFD56 | H50 | A=0.6 |
| 182A-0076 | SMA-KFD72 | H50 | A=0.4 |
| 182D-0005 | SMA-KFD72G | H50 | A=0.4 |
| 182A-0077 | SMA-KFD75 | H99 | A=0.6 |
| 182D-0006 | SMA-KFD75AG | H50 | A=0.6 |
| 182A-0078 | SMA-KFD191 | H50 | A=0.8 |
| 182A-0079 | SMA-KFD92 | H50 | A=0.9 |
| 182A-0080 | SMA-KFD113 | H99 | A=0.4 |
| 182A-0081 | SMA-KFD159 | H50 | A=0.5 |
| 182D-0007 | SMA-KFD159G | H50 | A=0.5 |

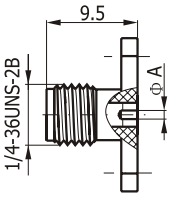


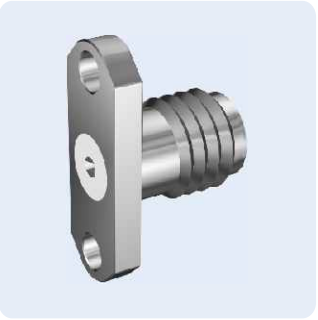

直式法兰安装插座 Straight Flange Jacks

| 产品编码 Product No. | 产品名称 Pruduct type | 安装尺寸 Mounting Hole | 备注 Notes |
|---|---|---|---|
| 182A-0082 | SMA-KFD86 | H50 | |

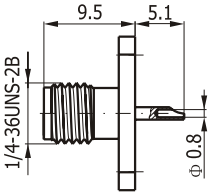

直式法兰安装插座 Straight Flange Jacks

| 产品编码 Product No. | 产品名称 Pruduct type | 安装尺寸 Mounting Hole | 备注 Notes |
|---|---|---|---|
| 182A-0083 | SMA-KFD90 | H73 | L1=3.0 L2=2.5 |
| 182D-0008 | SMA-KFD90G | H73 | L1=3.0 L2=2.5 |

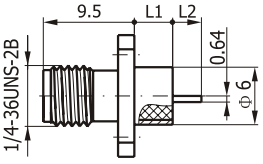


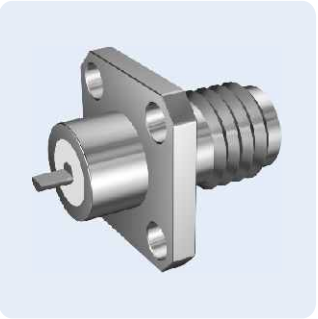

直式法兰安装插头 Straight Flange Plugs

| 产品编码 Product No. | 产品名称 Pruduct type | 安装尺寸 Mounting Hole | 备注 Notes |
|---|---|---|---|
| 181A-0001 | SMA-JFD | H52 | L1=8.6 L2=4.0 A=1.3 |
| 181A-0002 | SMA-JFD23 | H52 | L1=2.0 L2=4.0 A=1.3 |
| 181A-0003 | SMA-JFD28 | H52 | L1=5.2 L2=3.0 A=0.8 |

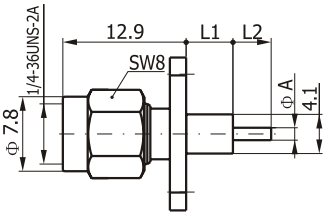

直式法兰安装插头 Straight Flange Plugs

| 产品编码 Product No. | 产品名称 Pruduct type | 安装尺寸 Mounting Hole | 备注 Notes |
|---|---|---|---|
| 181A-0004 | SMA-JFD1 | H73 | L1=2.4 |
| 181A-0005 | SMA-JFD2 | H73 | L1=3.2 |
| 181A-0006 | SMA-JFD3 | H73 | L1=4.8 |
| 181A-0007 | SMA-JFD4 | H73 | L1=4.0 |

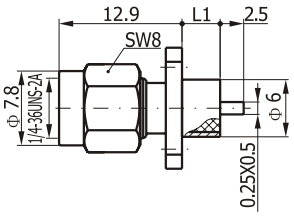


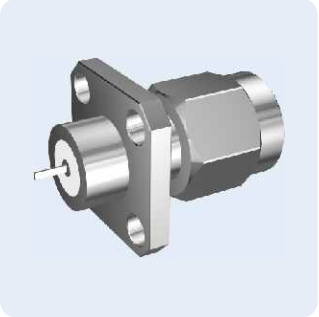

直式法兰安装插头 Straight Flange Plugs

| 产品编码 Product No. | 产品名称 Pruduct type | 安装尺寸 Mounting Hole | 备注 Notes |
|---|---|---|---|
| 181A-0008 | SMA-JFD5 | H68 | h=0.5 |
| 181A-0009 | SMA-JFD9 | H68 | h=0.2 |

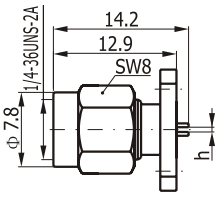

直式法兰安装插头 Straight Flange Plugs

| 产品编码 Product No. | 产品名称 Pruduct type | 安装尺寸 Mounting Hole | 备注 Notes |
|---|---|---|---|
| 181A-0010 | SMA-JFD6 | H68 | |

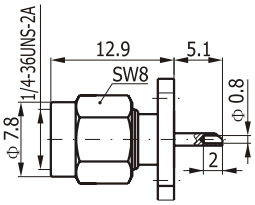

直式法兰安装插头 Straight Flange Plugs

| 产品编码 Product No. | 产品名称 Pruduct type | 安装尺寸 Mounting Hole | 备注 Notes |
|---|---|---|---|
| 181A-0011 | SMA-JFD7 | H71 | L1=3.2 |
| 181A-0012 | SMA-JFD8 | H71 | L1=4.0 |
| 181A-0013 | SMA-JFD21 | H71 | L1=2.4 |

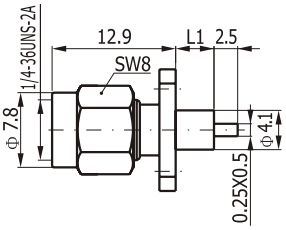

直式法兰安装插头 Straight Flange Plugs

| 产品编码 Product No. | 产品名称 Pruduct type | 安装尺寸 Mounting Hole | 备注 Notes |
|---|---|---|---|
| 181A-0014 | SMA-JFD15 | H68 | h=0.2 |
| 181A-0015 | SMA-JFD16 | H68 | h=0.4 |

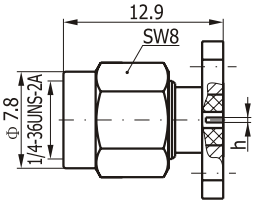

直式法兰安装插头 Straight Flange Plugs

| 产品编码 Product No. | 产品名称 Pruduct type | 安装尺寸 Mounting Hole | 备注 Notes |
|---|---|---|---|
| 181A-0016 | SMA-JFD11 | H71 | L1=2.4 L2=4.0 A=1.3 |
| 181A-0017 | SMA-JFD12 | H71 | L1=8.4 L2=2.0 A=1.3 |
| 181A-0018 | SMA-JFD13 | H71 | L1=8.4 L2=4.0 A=1.3 |
| 181A-0019 | SMA-JFD14 | H71 | L1=4.0 L2=0.6 A=0.4 |
| 181A-0020 | SMA-JFD35 | H71 | L1=5.0 L2=4.5 A=1.3 |
| 181A-0021 | SMA-JFD37 | H71 | L1=7.5 L2=2.0 A=1.3 |

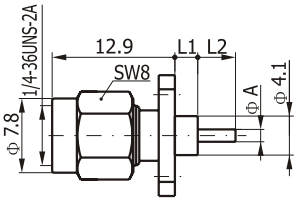

直式法兰安装插头 Straight Flange Plugs

| 产品编码 Product No. | 产品名称 Pruduct type | 安装尺寸 Mounting Hole | 备注 Notes |
|---|---|---|---|
| 181A-0022 | SMA-JFD17 | H71 | |

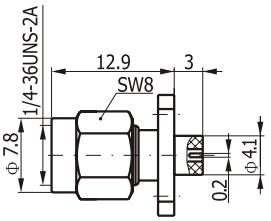


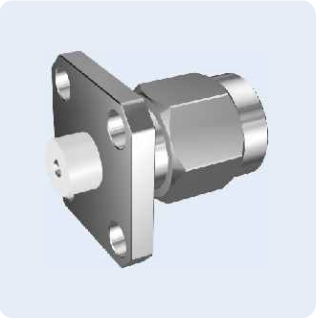

直式法兰安装插头 Straight Flange Plugs

| 产品编码 Product No. | 产品名称 Pruduct type | 安装尺寸 Mounting Hole | 备注 Notes |
|---|---|---|---|
| 181A-0023 | SMA-JFD18 | H73 | L1=3.2 L2=3.0 |
| 181A-0024 | SMA-JFD19 | H73 | L1=4.0 L2=2.5 |

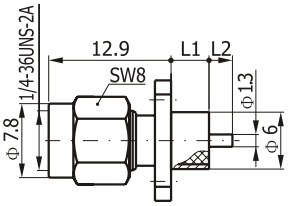


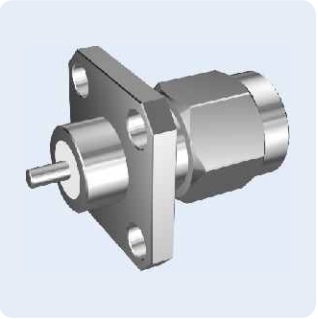

直式法兰安装插头 Straight Flange Plugs

| 产品编码 Product No. | 产品名称 Pruduct type | 安装尺寸 Mounting Hole | 备注 Notes |
|---|---|---|---|
| 181A-0025 | SMA-JFD20 | H73 | |

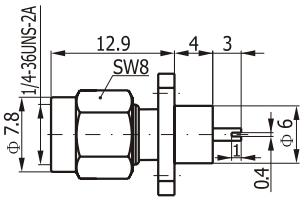


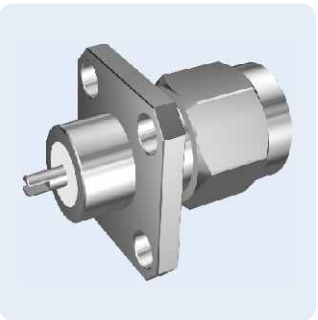

直式法兰安装插头　Straight Flange Plugs

| 产品编码 Product No. | 产品名称 Pruduct type | 安装尺寸 Mounting Hole | 备注 Notes |
|---|---|---|---|
| 181A-0026 | SMA-JFD10 | H68 | L1=4.0 A=1.3 |
| 181A-0027 | SMA-JFD24 | H67 | L1=1.6 A=0.9 |
| 181A-0028 | SMA-JFD25 | H67 | L1=1.2 A=0.8 |
| 181A-0029 | SMA-JFD25A | H66 | L1=0.9 A=0.5 |

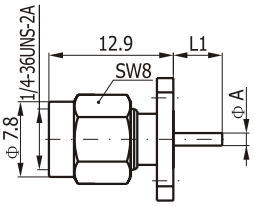

直式法兰安装插头　Straight Flange Plugs

| 产品编码 Product No. | 产品名称 Pruduct type | 安装尺寸 Mounting Hole | 备注 Notes |
|---|---|---|---|
| 181A-0030 | SMA-JFD27 | H73 | L1=2.4 L2=2.5 A=1.0 |
| 181A-0031 | SMA-JFD28 | H73 | L1=3.0 L2=1.5 A=0.7 |

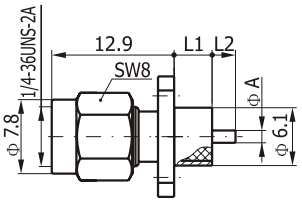


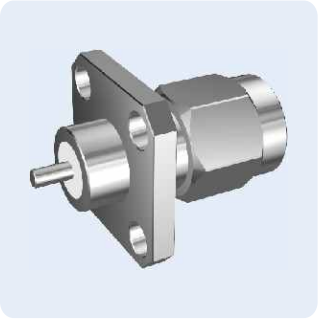

直式法兰安装插头　Straight Flange Plugs
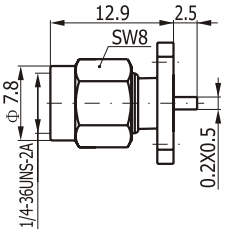
| 产品编码 Product No. | 产品名称 Pruduct type | 安装尺寸 Mounting Hole | 备注 Notes |
|---|---|---|---|
| 181A-0032 | SMA-JFD33 | H68 | |