Programming, Problem Solving, and Algorithms

CPSC203, 2019 W1

Announcements

Project 2 is released. Due 11:59p, Nov 7.

5

"Problem of the Day" continues!

Exam: of 72 pts. 85%

Today:

Markov Chains Fin

State Space Search

Representation

Implementation

Building a Song

MHALL ex → Markov Chain

→ type of stochastic process

random evolves over "time"

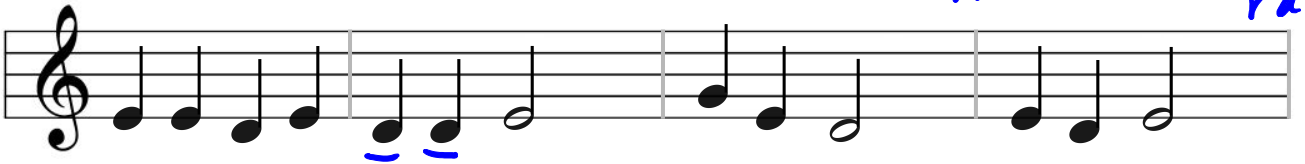

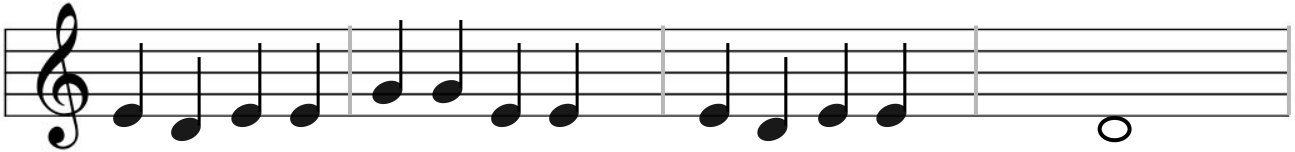

1. Randomly choose a start note and put it in a list
2. for 25 notes, in the rhythm of MHaLL
   a. Generate a new note
   b. Put the new note in the list
3. play the list of notes

	C	D	E	G
C	0	1.0	0	0
D	0.3	0.3	0.4	0
E	0	0.45	0.45	0.1
G	0	0	0.5	0.5

The Technical Details

You have just learned about a particular type of random process called a *Markov Chain*.

We modelled it using a *transition table*, or a *finite state machine*, and we used it as the basis for an algorithm to generate music.

Now let's look at some code!

https://github.students.cs.ubc.ca/cpsc203-2019w-t1/LecMHALL/

Other Applications

URL1 URL2

URL1
URL2
URL3

original google whitepaper

PageRank: Google's first search algorithm

- Some pages are likely to "follow" (be linked from) others.
- Rank of page is based on the probability that you'll be there at any moment

Natural Language Processing

- Some words are more likely to follow others.
- "I just ate the whole desert" probably has a misspelling.
- "For dinner I ___ … " next word is probably "ate"

DNA matching

Chemical reaction simulation

Many others…

But I thought we were talking about graphs...

	C	D	E	G
C	0	1.0	0	0
D	0.3	0.3	0.4	0
E	0	0.45	0.45	0.1
G	0	0	0.5	0.5

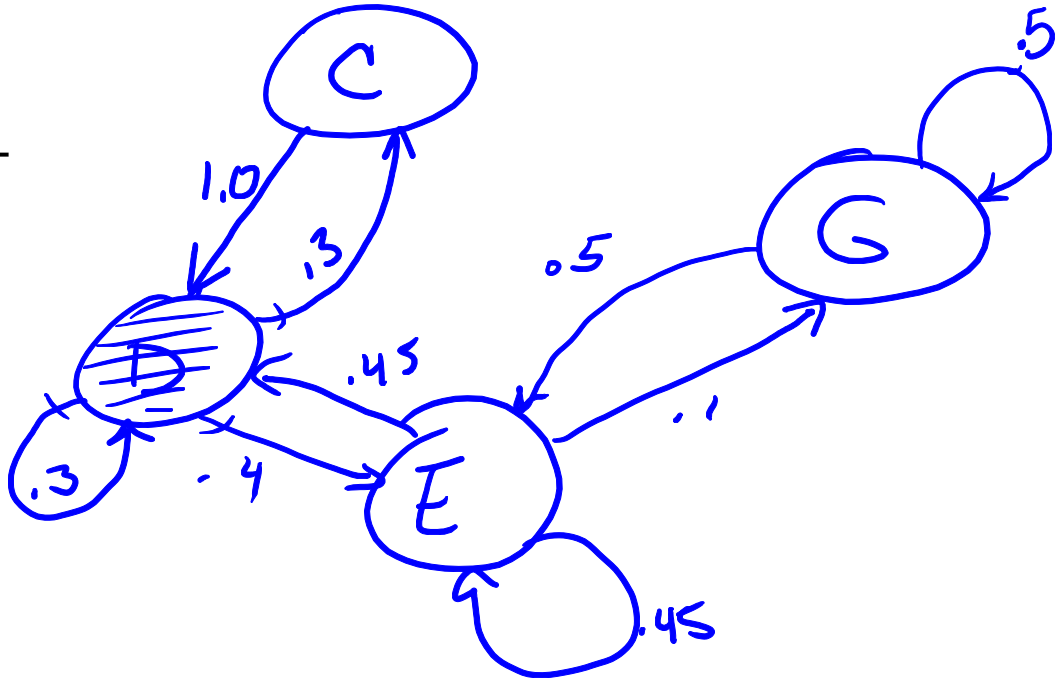

http://setosa.io/markov

Representing Sudoku

A *representation* of a system is a model of the system that is useful in analysis.

A *state space* is a collection of all possible configurations of a physical system.

Each configuration is described using its representation, and is called a *state*.

How would you represent the game of Sudoku?

grid - ability to add state to positions in grid.
rules
states

2			
			3
	4	1	

State Space Graphs

Define a graph where the set of vertices is the set of possible board configs.

And the set of edges consists of pairs (u,v) where there is a valid move from config u to config v.

How many valid neighbors does this Sudoku puzzle state have?

2	1 3	4	1 4
4, 1	1	2,4	3
1,3	1,2,3	2,3,4	2,4
3	4	1	2

2			
			3
		2	
	4	1	

Searching State Space Graphs

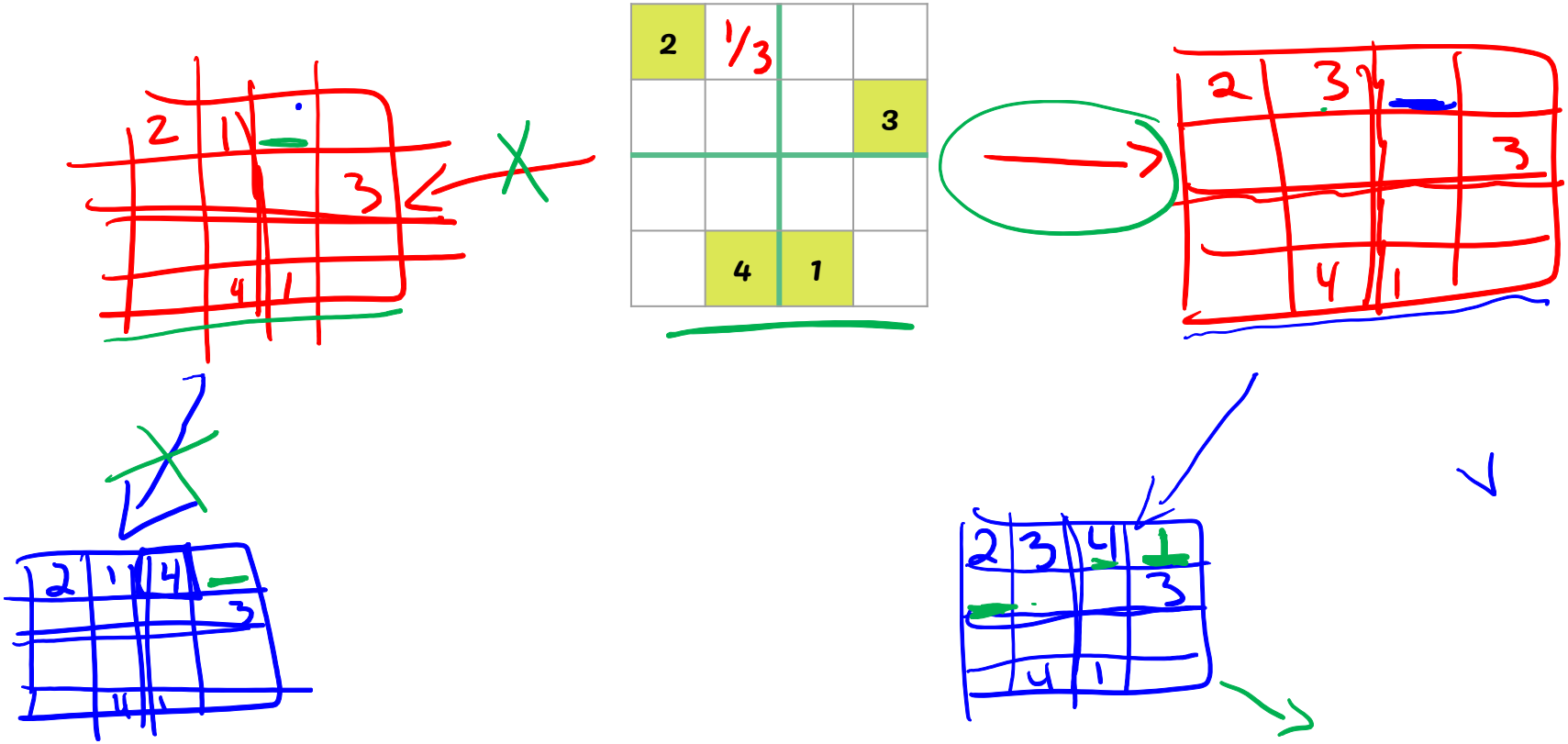

Depth First Search

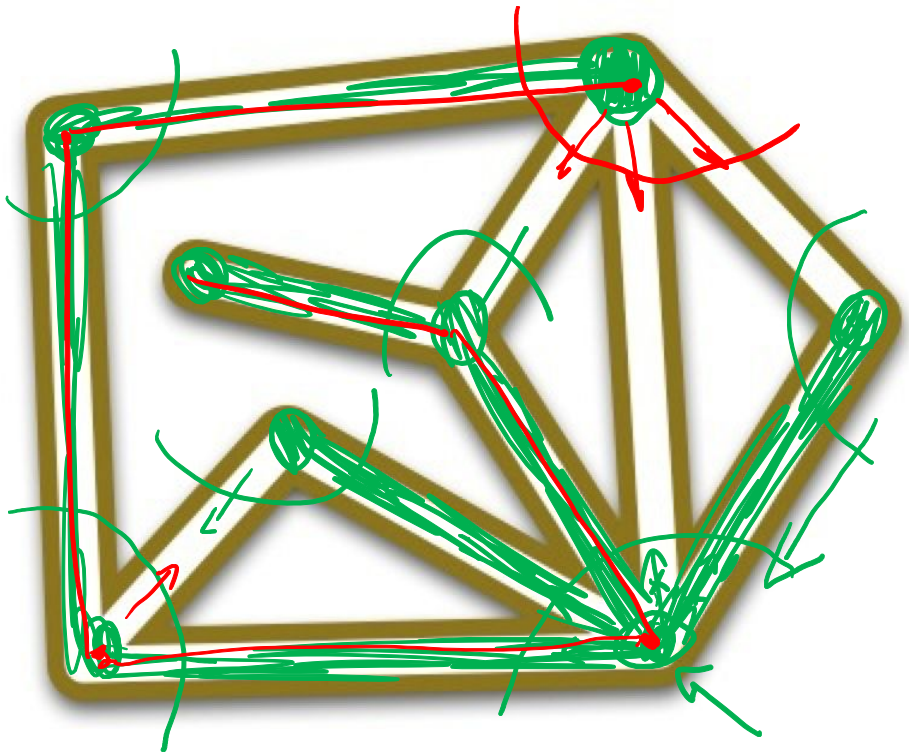

Ariadne, Theseus, and the Minotaur

Depth First Search

DFS(G,A)

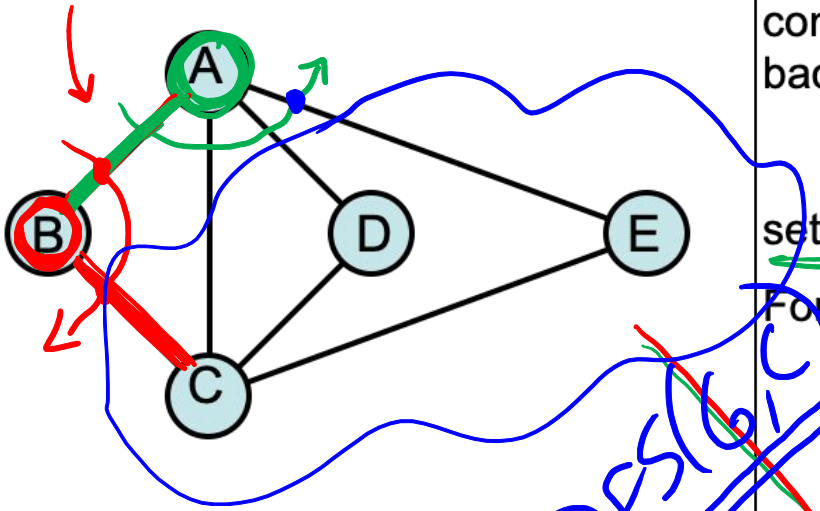

def

Algorithm DFS(G,v): A

Input: graph G and start vertex v

Output: labeling of the edges of G in the connected component of v as discovery edges and back edges

setLabel(v, VISITED)

For all w in G.adjacentVertices(v)

if getLabel(w) = UNVISITED C

setLabel((v,w),DISCOVERY) green in prev slide

DFS(G,w) DFS(C,B) DFS(G,C)

print

else if getLabel((v,w)) = UNEXPLORED

setLabel((v,w),BACK) white edges on prev slide

DFS(G,C)

A new ADT: Stack

Programmatic manifestation of _____.

ADT: Stack

Insert -- push(data)

Remove -- pop() returns data

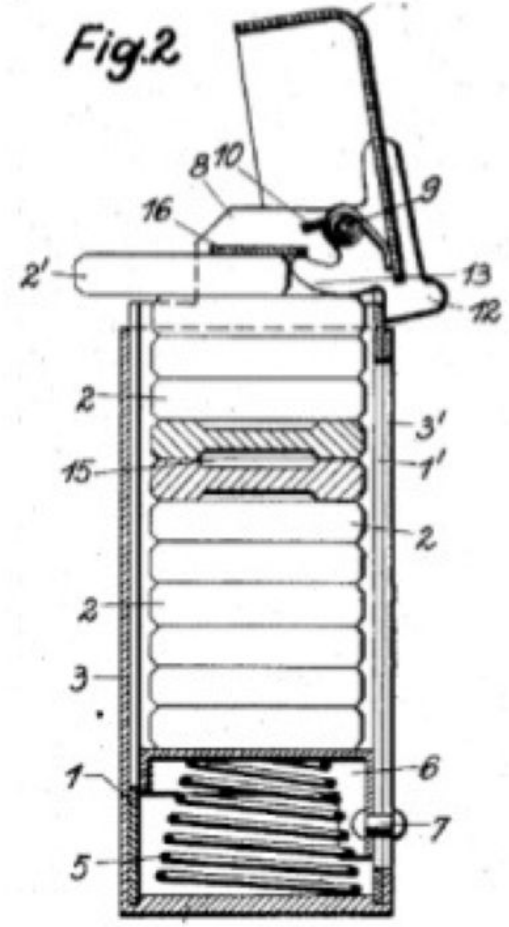

Recursion: An abstract Stack

Moving toward implementation:

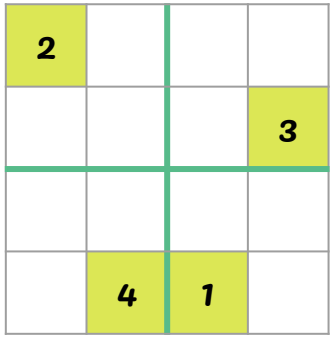

Need to be able to check whether a candidate entry is valid.

Suppose we have a variable `grid`, representing the board, and we want to place a value called `num`, in position `(x,y)`.

Row check:

Column check:

Region check:

POTD #28 Thu

https://github.students.cs.ubc.ca/cpsc203-2019w-t1/potd28

Describe any snags you run into:

1. Line ___: _____
2. Line ___: _____
3. Line ___: _____
4. Line ___: _____
5. Line ___: _____

ToDo for next class...

POTD: Continue every weekday! Submit to repo.

Reading: TLACS Ch 10 & 12 (lists and dictionaries)

References:

https://brilliant.org/wiki/markov-chains/

https://medium.com/@eightlimbed/counting-on-pythons-defaultdict-b652204780bd