comBus usage examples:
− internal communication between system components
− proprietary 3 wire busses used in marine electronics

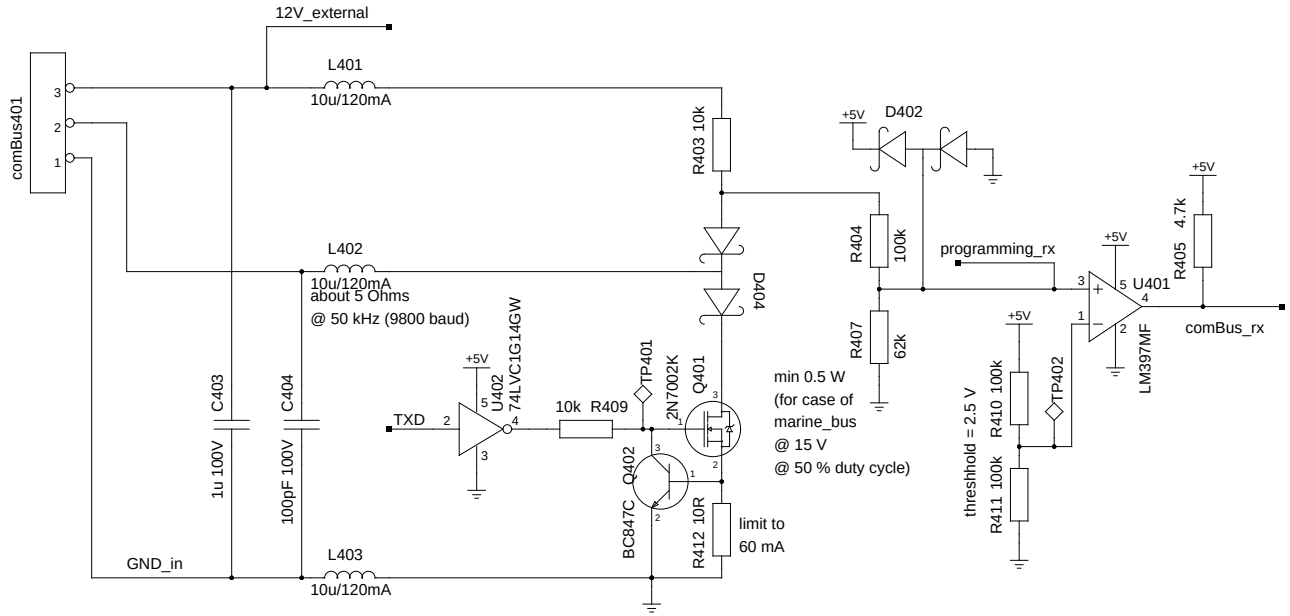

Switch usage examples:
− limit switches
− buttons
− speed in

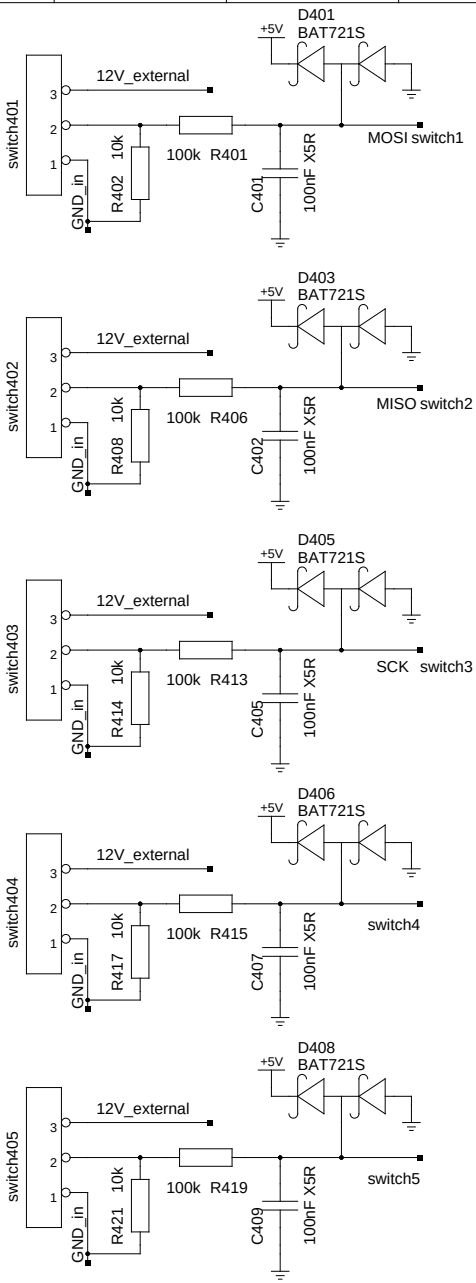

Potentiometer input usage examples:
− actuator postition
− rudder reference
− joystick in

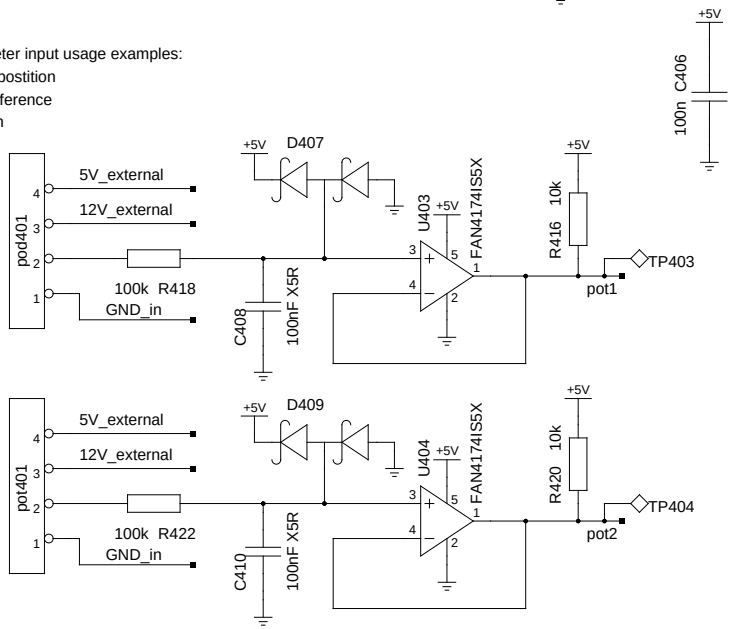

Splashelec			
TITLE course computer: 4. interfaces			
FILE:		REVISION: V1	2010−09−16
PAGE 4	OF 5	DRAWN BY:	bernt.weber@splashelec.com