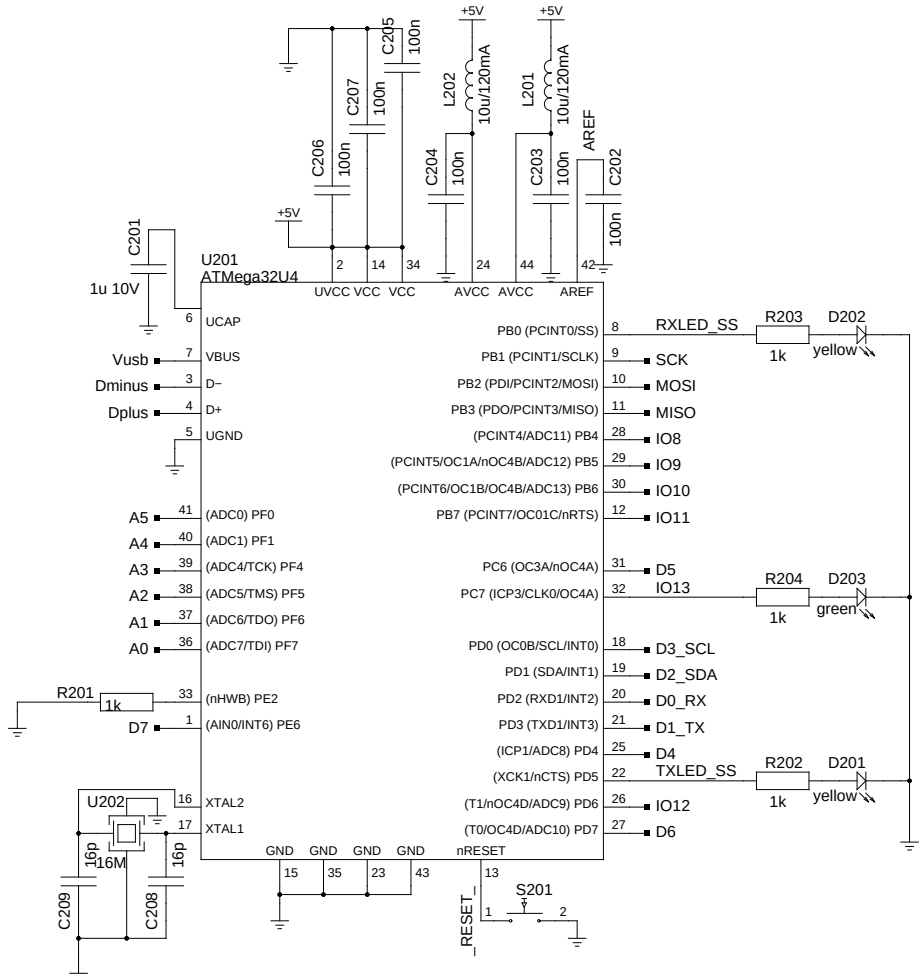

Adapt capacitors to crystal:
C=2xCl+7.5pF
(Cl specified for crystal,
see "Atmel AVR042: AVR
Hardware Design
Considerations" design note).

TITLE	CAN_Interfacer: 2 uController		
FILE:		REVISION:	V1.0 2013−02−11
PAGE 2	OF 2	DRAWN BY:	BW