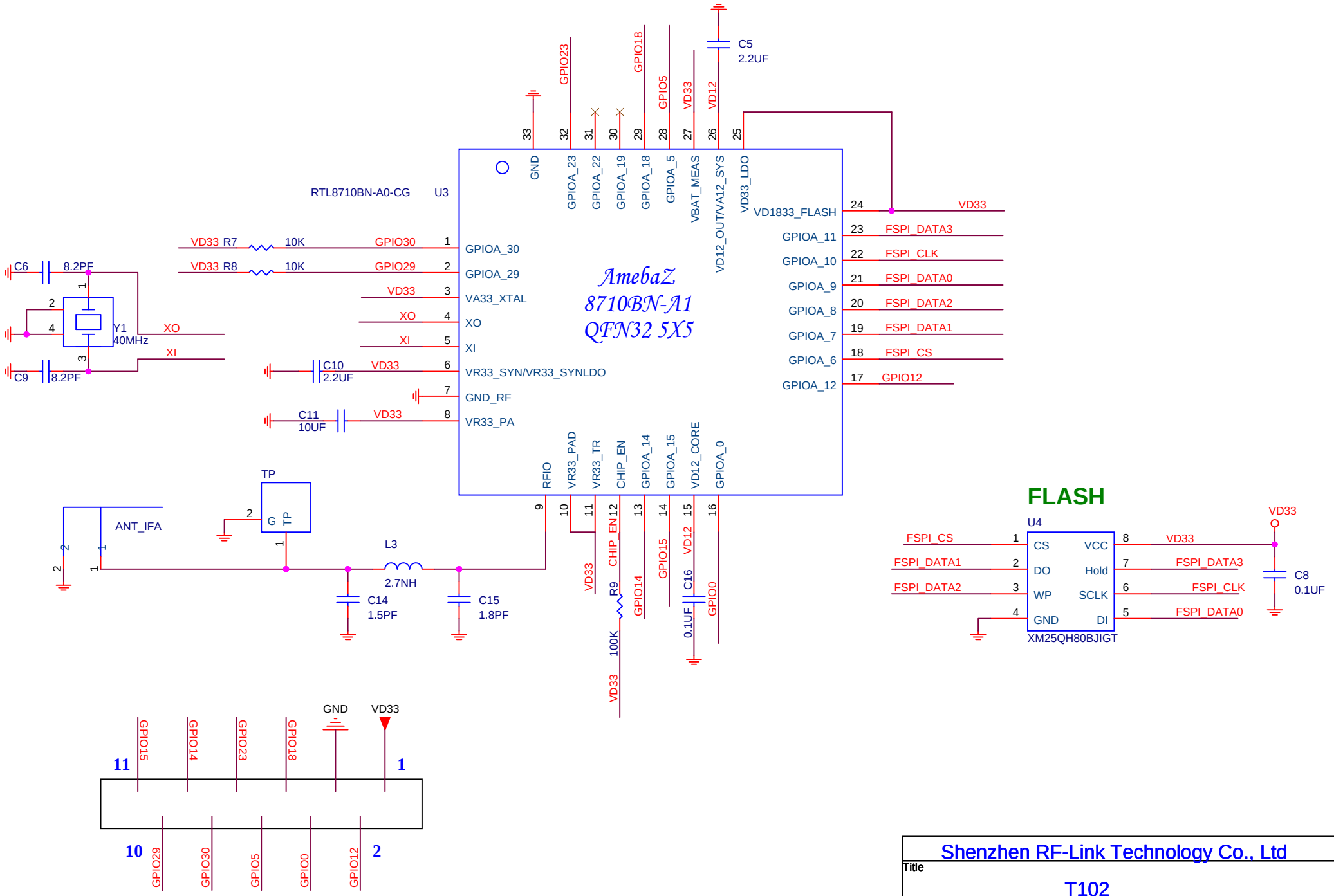

Shenzhen RF-Link Technology Co., Ltd

Title: T102

Size	Document Number	Rev
A4	<Doc>	1.0

Date: Tuesday, September 25, 2018 Sheet 1 of 1