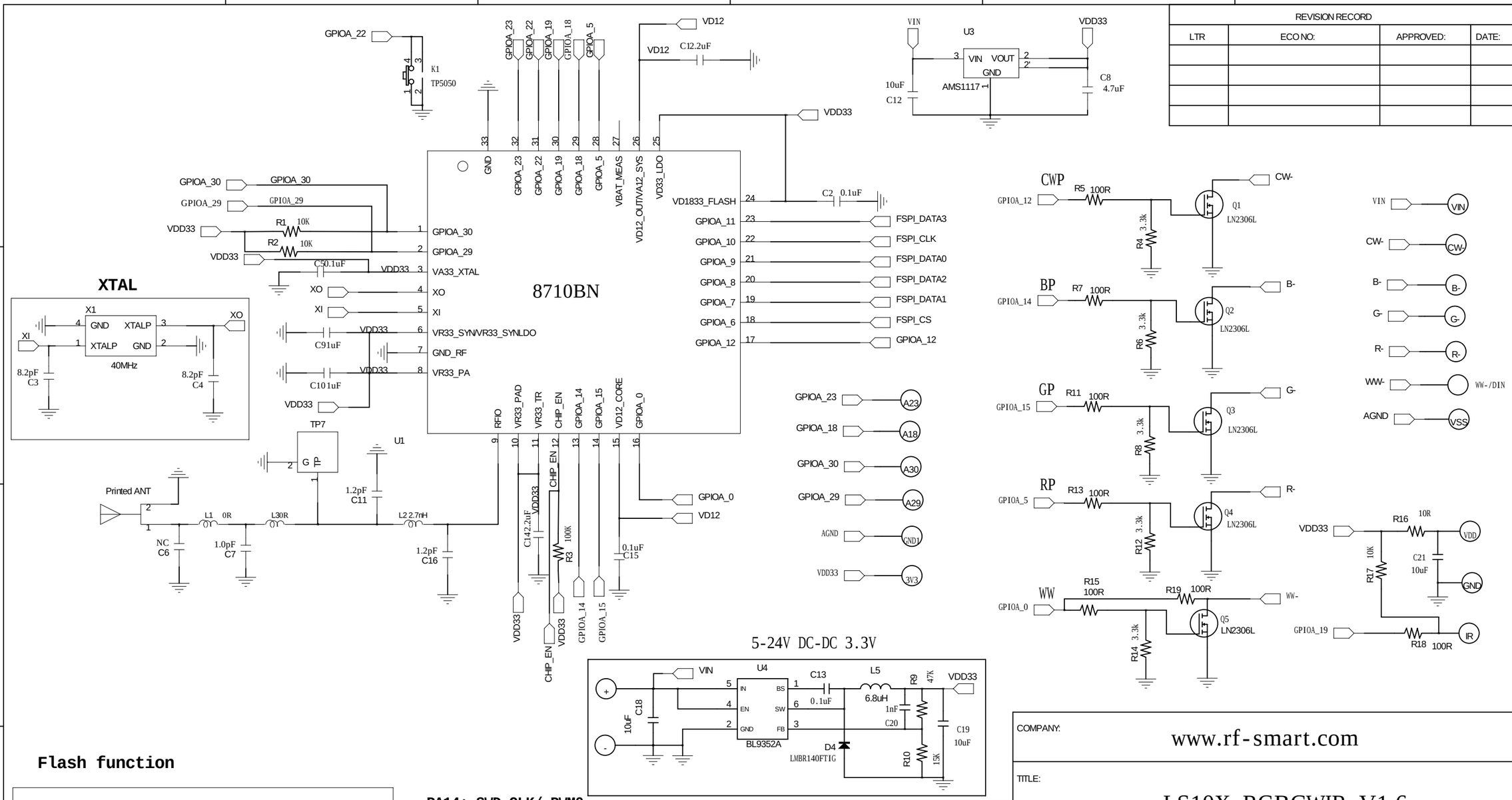

REVISION RECORD			
LTR	ECO NO:	APPROVED:	DATE:

Flash function

PA14: SWD_CLK/ PWM0
PA15: SWD_DATA/ PWM1
PA30: Uart_log_TXD/ I2C0_SDA
PA29: Uart_log_RXD/ I2C0_SCL
PA18: UART0_RXD/ SPI1_CLK/ SPI0_SCK/ I2C1_SCL
PA19: UART0_CTS/ SPI1_CS/ SPI0_CS/ I2C0_SDA
PA22: UART0_RTS/ SPI1_MISO/ SPI0_MISO/ I2C0_SCL
PA23: UART0_TXD/ SPI1_MOSI/ SPI0_MOSI/ I2C1_SDA

DRAWN: liuqing	DATED: 2019/1/18	COMPANY: www.rf-smart.com	
CHECKED: liuqing	DATED: 2019/1/18	TITLE: LS10X-RGBCWIR-V1.6	
QUALITY CONTROL:	DATED:	CODE: <Code>	SIZE: B
CLEARED:	DATED:	DRAWING NO: 01	REV: V1.0
		SCALE: <Scale>	SHEET: 1 OF 1