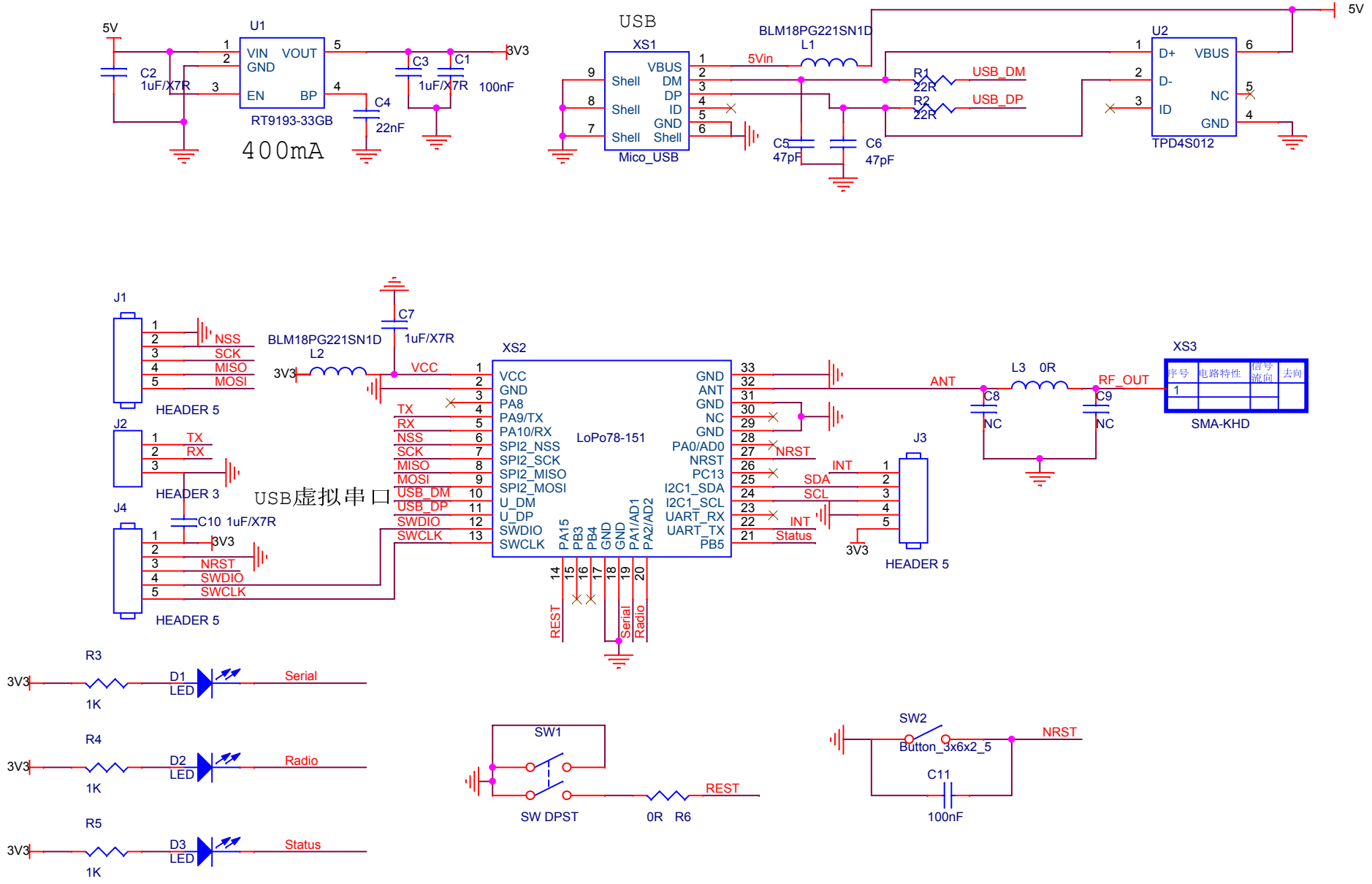

Title	LoPo-HFPI3-4G	
Size A4	Document Number <Doc>	Rev V1.0
Date: Tuesday, December 12, 2017	Sheet 1 of 1	