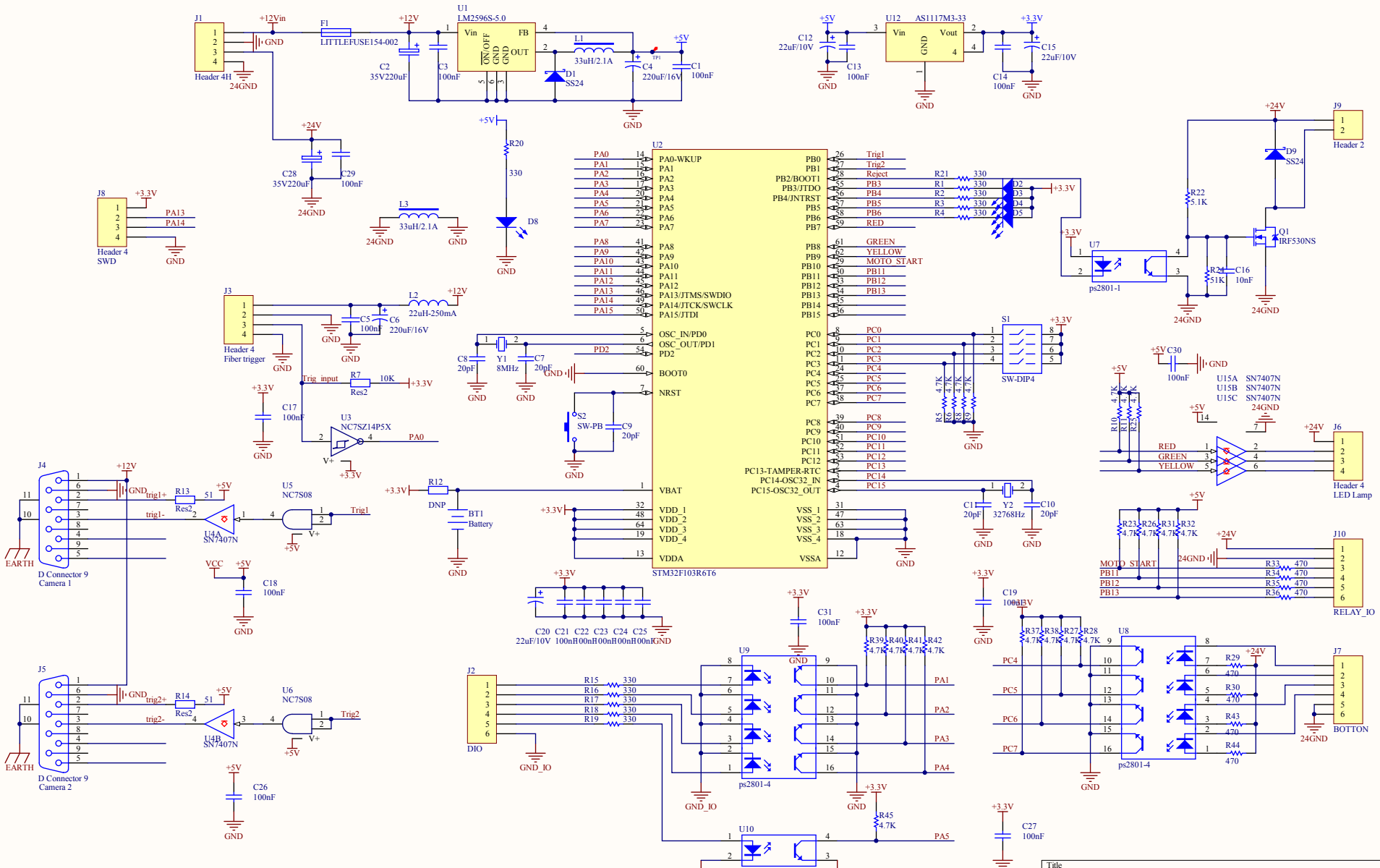

Title		
Size A3	Number 201401	Revision V03
Date: 2014/12/24		Sheet of 1
File: E:\huyu\..\main.SchDoc		Drawn By:

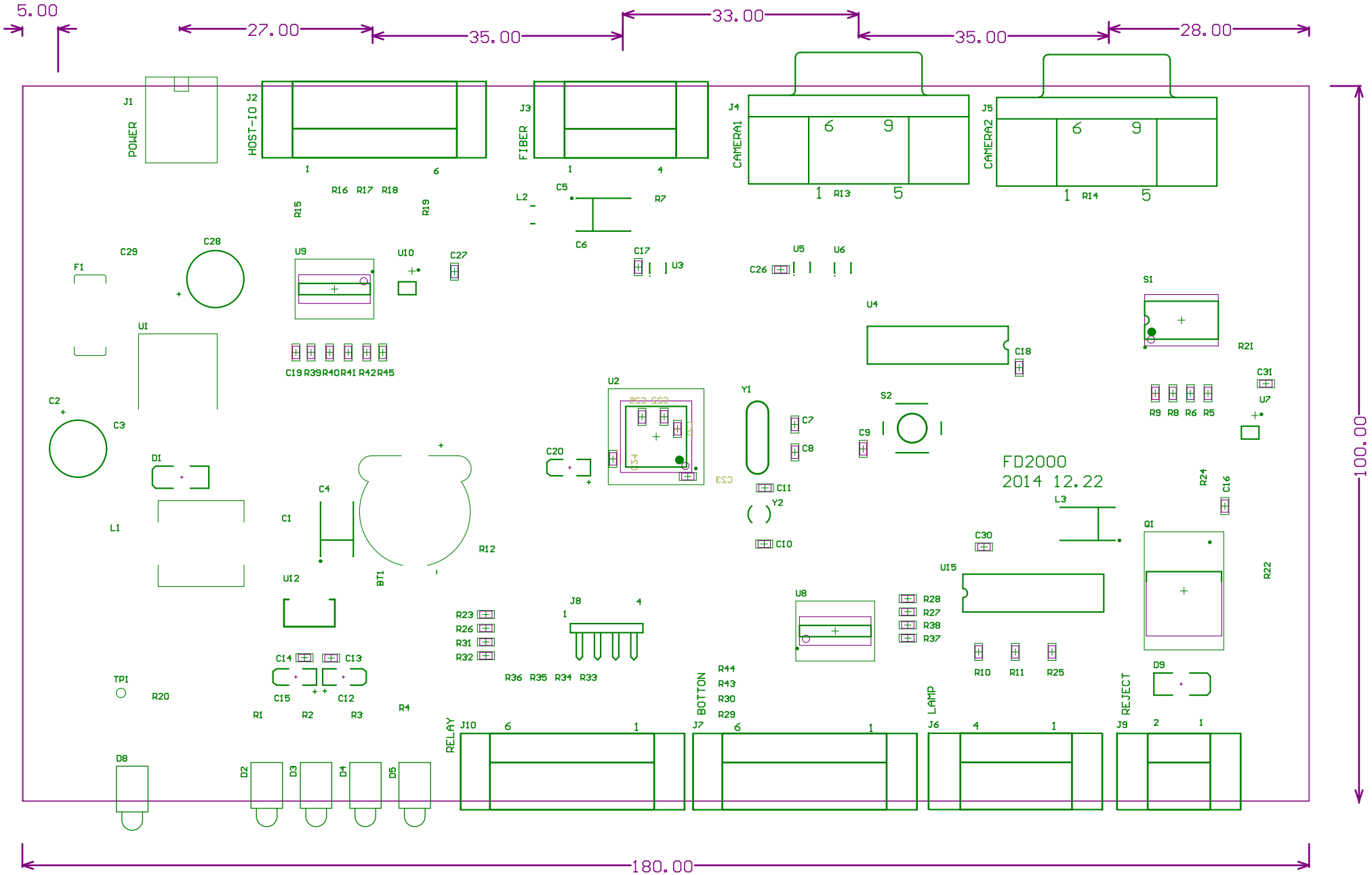
5.00
27.00
35.00
33.00
35.00
28.00
100.00
180.00
J1
POWER
J2
HOST-IO
J3
FIBER
J4
CAMERA1
J5
CAMERA2
R16 R17 R18
R15
R19
L2
C5
C6
R7
C29
C28
F1
U9
U10
C27
C17
U3
C26
U5
U6
U4
C18
S1
R21
C31
U7
R9 R8 R6 R5
U1
C19 R39 R40 R41 R42 R45
C2
C3
D1
U2
Y1
C7
C8
C9
S2
C20
C11
Y2
C10
FD2000
2014 12.22
R24
C16
L3
Q1
C30
U15
R22
L1
C4
C1
R12
U12
BT1
J8
R23
R26
R31
R32
U8
R28
R27
R38
R37
R10
R11
R25
D9
C14
C13
C15
C12
TP1
R20
R1
R2
R3
R4
R36 R35 R34 R33
R44
R43
R30
R29
BOTTON
LAMP
REJECT
RELAY
J10
J7
J6
J9
D8
D2
D3
D4
D5

POWER