Zedtown is considering building some wind power stations to produce electricity.

The Zedtown Council gathered information about the following model.

Model:	E-82
Height of tower:	138 metres
Number of rotor blades:	3
Length of one rotor blade:	40 metres
Maximum speed of rotation:	20 rotations per minute
Price for construction:	3 200 000 zeds
Turnover:	0.10 zeds per kWh generated
Maintenance cost:	0.01 zeds per kWh generated
Efficiency:	Operational 97% of the year

Note: kilowatt hours (kWh) is a measure of electrical energy.

Zedtown has decided to erect some E-82 wind power stations in a square field (length = breadth = 500 m).

According to building regulations, the minimum distance between the towers of two wind power stations of this model has to be five times the length of a rotor blade.

The town mayor has made a suggestion for how to arrange the wind power stations in the field. This is shown in the diagram opposite.

Explain why the town mayor's suggestion does not meet the building regulations. Support your arguments with calculations.

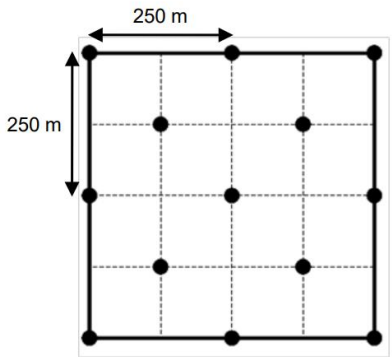

● = wind power station tower
Note: Drawing is not to scale.