NTIRE 2026 Efficient SR Challenge Factsheet
AMCANet: A Lightweight Architecture-guided Multi-head Convolution Attention Network for Efficient Image Super-Resolution

Rui Chen
Shenzhen International Graduate School, Tsinghua University
ShenZhen, China
chenr24@mails.tsinghua.edu.cn

1. Team details

- Team name:
  XSR
- Team leader name:
  Rui Chen
- Team leader address and email:
  Shenzhen International Graduate School, Tsinghua University, China;
  chenr24@mails.tsinghua.edu.cn
- Affiliation:
  Shenzhen International Graduate School, Tsinghua University, China
- Affiliation of the team and/or team members with NTIRE 2026 sponsors (check the workshop website):
  No affiliation
- User names and entries on the NTIRE 2026 Codalab competitions (development/validation and testing phases):
  rylan
- Link to the codes/executables of the solution(s):
  https://github.com/chenr2020/AMCANet

2. Method

2.1. Network Architecture

The overall architecture of AMCANet is illustrated in Figure 1(a). The network takes a low-resolution image as input and first extracts shallow features through a 3×3 convolutional layer. These shallow features are then fed into multiple cascaded Multi-head Convolution Blocks (MHCBs) for deep feature extraction. Each MHCB consists of an Architecture-guided Multi-head Convolution Attention (AMCA) module and a Feature Selective Gate (FSG) module. To further enhance the model's representational capacity, a 1×1 convolutional layer is introduced after all MHCBs. The image reconstruction component adopts a lightweight design, by first adjusting the channel dimension with a 3×3 convolution to accommodate the upsampling scale, followed by a PixelShuffle layer [13] to increase the resolution. Additionally, a global residual connection is incorporated before the reconstruction module to facilitate the learning and reconstruction of high-frequency details.

2.2. Architecture-guided Multi-head Convolution Attention (AMCA)

Efficient collaborative modeling of local and non-local features is crucial for image super-resolution. While ViT-based methods [2, 4, 7, 10, 16] leverage self-attention to capture long-range dependencies and achieve remarkable performance, they incur high computational complexity and exhibit limitations in modeling local details. In contrast, Convolutional Neural Networks (CNNs) [1, 5, 8, 11, 17] are computationally efficient and effective at capturing fine details, yet their local receptive fields inherently limit their ability to model global contextual information.

To bridge this critical gap between global representation and computational efficiency, we draw inspiration from Multi-Head Self-Attention [15] for capturing diverse contextual representations and propose the Architecture-guided Multi-head Convolution Attention (AMCA) module. The AMCA module employs multiple parallel Convolution Attention (CA) heads, each composed of efficient convolutional operations. By assigning different downsampling rates to each head, it simulates the multi-head attention mechanism for multi-scale feature extraction, enabling collaborative modeling of both local and non-local features. Specifically, given the input feature $F_{in} \in \mathbb{R}^{H \times W \times C}$, where $H \times W$ denotes spatial size and C represents the number of channels, we first normalize the input feature to stabilize training. The normalized F_{in} is then fed into N

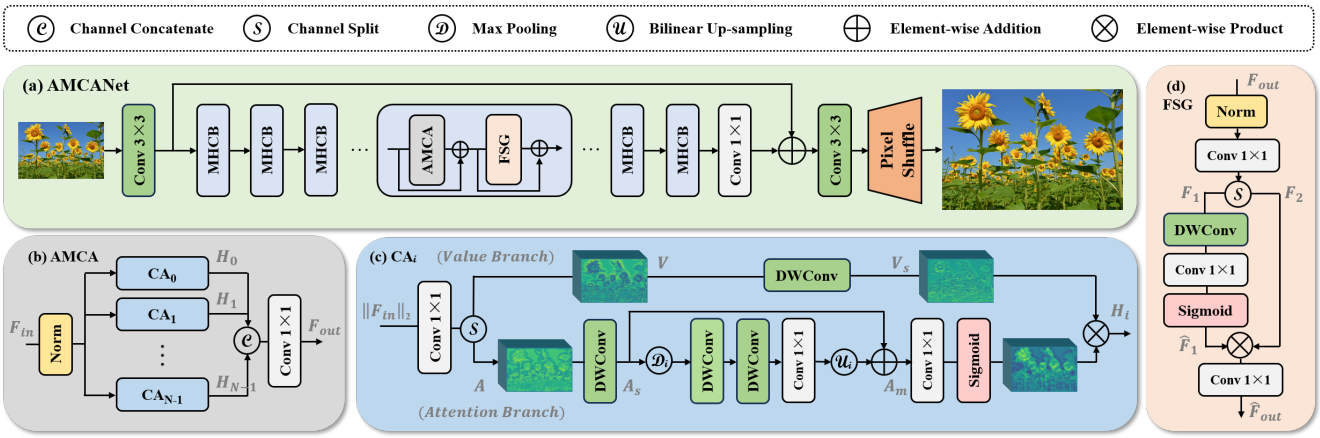

Figure 1. Network architecture of the proposed AMCANet. The model is composed of a shallow feature extraction module, multi-head convolution blocks (MHCBs), and a lightweight image reconstruction module. Each MHCB contains an Architecture-guided Multi-head Convolution Attention (AMCA) module and a Feature Selective Gate (FSG) module, with the AMCA module consisting of multiple convolution attention heads.

distinct CA heads:

$$H_i = \mathrm{CA}_i(\|F_{in}\|_2), \tag{1}$$

Where $H_i \in \mathbb{R}^{H\times W\times \frac{C}{N}}, i \in \{0, 1..., \mathrm{N}-1\}$, $\|\cdot\|_2$ denotes L2 normalization, and $\mathrm{CA}_i(\cdot)$ represents distinct convolutional attention heads. By applying $\mathrm{CA}_i(\cdot)$ with varying downsampling rates, we extract features H_0 to $H_{\text{N-1}}$ across different dimensions. Finally, we concatenate these N features and feed them into a 1×1 convolutional layer to form the representative output of AMCA. This process can be expressed as:

$$F_{out} = \mathrm{Conv}_{1\times1}(\mathrm{Concat}([H_0, H_1, ..., H_{\text{N-1}}])), \tag{2}$$

where $F_{out} \in \mathbb{R}^{H\times W\times C}$ is the output feature.

Convolutional Attention. Given the normalized input $\|F_{in}\|_2$, we first expand the channels using a 1×1 convolution. The resulting features are then split into an attention branch and a value branch, which correspond to the attention map A and value matrix V, respectively:

$$\{A, V\} = \mathrm{Split}(\mathrm{Conv}_{1\times1}(\|F_{in}\|_2)). \tag{3}$$

For lightweight considerations, we use a 3×3 depthwise separable convolution to extract their spatial information, obtaining A_s and V_s:

$$\begin{aligned} A_s &= \mathrm{DWConv}_{3\times3}(A), \\ V_s &= \mathrm{DWConv}_{3\times3}(V). \end{aligned} \tag{4}$$

To enable each CA head to focus on distinct spatial regions, we employ an architectural design that guides different heads to capture features at complementary scales. The detailed procedure for the i-th head is as follows. We first downsample the spatial feature A_s using $\mathcal{D}_i(\cdot)$, which denotes a max pooling operation with a stride of 1 when $i = 0$ and $4i$ when $i > 0$. The downsampled feature then passes through a convolutional group $\mathcal{F}$ to extract deeper representations:

$$\mathcal{F} = \mathrm{Conv}_{1\times1}(\mathrm{DWConv}_{3\times3}(\mathrm{DWConv}_{3\times3}(\cdot))). \tag{5}$$

The output is upsampled via bilinear interpolation $\mathcal{U}_i(\cdot)$ to restore the original spatial size. Since downsampling may discard partial feature information, we introduce a residual connection by adding the result back to A_s to ensure information integrity. This yields the refined attention feature:

$$A_m = \mathcal{U}_i(\mathcal{F}(\mathcal{D}_i(A_s))) + A_s. \tag{6}$$

Subsequently, A_m is passed through a 1×1 convolutional layer for channel mixing, followed by s Sigmoid activation. The resulting attention map is multiplied with the value matrix V_s to enhance the focus on specific regions, formalized as:

$$H_i = \mathrm{Sigmoid}(\mathrm{Conv}_{1\times1}(A_m)) \odot V_s, \tag{7}$$

Where $\mathrm{Sigmoid}(\cdot)$ denotes the Sigmoid activation, and $\odot$ represents element-wise multiplication.

This module's effectiveness stems from two key innovations: (1) the strategically varied downsampling ratios that guide multi-scale feature extraction, and (2) the well-designed CA head that simulates the attention mechanism within a lightweight convolutional framework. Together, they enable the model to balance the exploration of local and non-local information. The ablation study in **??** will quantitatively validate the contribution of both aspects.

2.3. Feature Selective Gate (FSG)

Conventional feed-forward network (FFN) [15] typically consists of fully connected layers or 1×1 convolution.

While enabling cross-channel information exchange, they lack effective modeling in the spatial dimension. To address this problem, we design an efficient feature selective gate (FSG) module to further enhance the representational capacity of the features extracted by the AMCA module.

As shown in Figure 1(d), the FSG module first applies a 1×1 convolution to the normalized F_{out} to expand the channel dimension. The expanded features are then evenly split along the channel dimension into two parts $\{F_1, F_2\}$. A depthwise separable 3×3 convolution followed by a 1×1 convolution is applied to F_1 to effectively extract local spatial context information. Subsequently, a spatial-aware weight mask is generated via a Sigmoid activation function. This mask is applied to the other feature part F_2, enabling spatially adaptive feature selection and enhancement. Finally, the processed features are further fused via a 1×1 convolution and restored to the original channel dimension. This process can be formally expressed as:

$$\begin{aligned} \{F_1, F_2\} &= \text{Split}(\text{Conv}_{1\times1}(\|F_{out}\|_2), \\ \hat{F}_1 &= \text{Sigmoid}(\text{Conv}_{1\times1}(\text{DWConv}_{3\times3}(F_1))), \\ \hat{F}_{out} &= \text{Conv}_{1\times1}(\hat{F}_1 \odot F_2), \end{aligned} \tag{8}$$

Where $F_1, F_2 \in \mathbb{R}^{H\times W\times \frac{C}{2}}$, and Split$(\cdot)$ denotes channel splitting.

2.4. Multi-Head Convolution Block (MHCB)

To fully leverage the strengths of the AMCA and FSG modules, we combine them into a Multi-Head Convolution Block (MHCB). This integration produces features with rich hierarchical representations. Residual connections are employed to ensure training stability and facilitate efficient information propagation. The complete MHCB architecture can be mathematically expressed as follows:

$$\begin{aligned} F_{out} &= \text{AMCA}(F_{in}) + F_{in}, \\ \hat{F}_{out} &= \text{FSG}(F_{out}) + F_{out}, \end{aligned} \tag{9}$$

where F_{in}, F_{out}, and $\hat{F}_{out}$ retain their previously defined meanings.

2.5. Training strategy

The proposed AMCANet contains seven MHCBs, in which we set the number of feature maps to 32. Also, the head number of the AMCA is set to 2. Throughout the entire training process, we use the Adam optimizer [6], where $\beta1$ = 0.9 and $\beta2$ = 0.999. The model is trained for 1000k iterations in each stage. Input patches are randomly cropped and augmented. Data augmentation strategies included horizontal and vertical flips, and random rotations of 90, 180, and 270 degrees. Model training was performed using Pytorch 1.12.0 [12] on RTX 3090. Specifically, the training strategy consists of several steps as follows.

1. In the starting stage, we train the model from scratch on the 800 images of DIV2K [14] and the first 10k images of LSDIR [9] datasets. The model is trained for total 10^6 iterations by minimizing L1 loss and FFT loss [3]. The HR patch size is set to 256×256, while the mini-batch size is set to 64. We set the initial learning rate to 1×10^{-3} and the minimum one to 1×10^{-5}, which is updated by the Cosine Annealing scheme.

2. In the second stage, we increase the HR patch size to 384, while the mini-batch size is set to 32. The model is fine-tuned by minimizing the L1 loss and FFT loss. We set the initial learning rate to 5×10^{-4} and the minimum one to 1×10^{-6}, which is updated by the Cosine Annealing scheme.

3. In the last stage, the model is fine-tuned with 480×480 HR patches, however, the loss function is changed to minimize the combination of L2 loss and FFT loss. Other settings are the same as Stage 2.

2.6. Experimental results

	PSNR(valid)	PSNR(test)	Params(M)	FLOPs(G)
baseline	26.94	27.01	0.151	9.83
AMCANet	26.90	26.99	0.0864	5.24

Table 1. Comparison of baseline and AMCANet

We compare the differences between the baseline and the AMCANet on the DIV2K_LSDIR_valid&test datasets. As can be seen from the table, our model AMCANet has a great advantage in the number of Params and FLOPs. Durning the testing phase, our proposed model scored 26.99.

3. Other details

- Planned submission of a solution(s) description paper at NTIRE 2026 workshop.

  We may submit a solution description paper at NTIRE 2026 workshop.

- General comments and impressions of the NTIRE 2026 challenge.

  The NTIRE 2026 challenge provides a great platform for advancing image restoration research. It encourages innovation and offers a benchmark for new techniques in the field.

- What do you expect from a new challenge in image restoration, enhancement, and manipulation?

  Perhaps we can consider introducing a competition focused on mobile device super-resolution. This would allow us to explore how well models perform in the context of resource-limited devices.

- Other comments: encountered difficulties, fairness of the challenge, proposed subcategories, proposed evaluation method(s), etc.

  So far everything seems fine, I don't have any suggestions.

References

[1] Namhyuk Ahn, Byungkon Kang, and Kyung-Ah Sohn. Fast, accurate, and lightweight super-resolution with cascading residual network. In *ECCV*, 2018. 1

[2] Hanting Chen, Yunhe Wang, Tianyu Guo, Chang Xu, Yiping Deng, Zhenhua Liu, Siwei Ma, Chunjing Xu, Chao Xu, and Wen Gao. Pre-trained image processing transformer. In *CVPR*, 2021. 1

[3] Sung-Jin Cho, Seo-Won Ji, Jun-Pyo Hong, Seung-Won Jung, and Sung-Jea Ko. Rethinking coarse-to-fine approach in single image deblurring. In *Proceedings of the IEEE/CVF international conference on computer vision*, pages 4641–4650, 2021. 3

[4] Haram Choi, Jeongmin Lee, and Jihoon Yang. N-gram in swin transformers for efficient lightweight image super-resolution. In *Proceedings of the IEEE/CVF conference on computer vision and pattern recognition*, pages 2071–2081, 2023. 1

[5] Zheng Hui, Xinbo Gao, Yunchu Yang, and Xiumei Wang. Lightweight image super-resolution with information multi-distillation network. In *ACM MM*, 2019. 1

[6] Diederik P Kingma and Jimmy Ba. Adam: A method for stochastic optimization. *arXiv preprint arXiv:1412.6980*, 2014. 3

[7] Meng Li, Bo Ma, and Yulin Zhang. Lightweight image super-resolution with pyramid clustering transformer. *IEEE Transactions on Circuits and Systems for Video Technology*, 2023. 1

[8] Wenbo Li, Kun Zhou, Lu Qi, Nianjuan Jiang, Jiangbo Lu, and Jiaya Jia. LAPAR: Linearly-assembled pixel-adaptive regression network for single image super-resolution and beyond. In *NeurIPS*, 2020. 1

[9] Yawei Li, Kai Zhang, Jingyun Liang, Jiezhang Cao, Ce Liu, Rui Gong, Yulun Zhang, Hao Tang, Yun Liu, Denis Demandolx, et al. Lsdir: A large scale dataset for image restoration. In *Proceedings of the IEEE/CVF Conference on Computer Vision and Pattern Recognition Workshops*, 2023. 3

[10] Jingyun Liang, Jiezhang Cao, Guolei Sun, Kai Zhang, Luc Van Gool, and Radu Timofte. SwinIR: Image restoration using swin transformer. In *ICCV Workshops*, 2021. 1

[11] Xiaotong Luo, Yuan Xie, Yulun Zhang, Yanyun Qu, Cuihua Li, and Yun Fu. Latticenet: Towards lightweight image super-resolution with lattice block. In *Proceedings of the European Conference on Computer Vision*, pages 272–289. Springer, 2020. 1

[12] Adam Paszke, Sam Gross, Francisco Massa, Adam Lerer, James Bradbury, Gregory Chanan, Trevor Killeen, Zeming Lin, Natalia Gimelshein, Luca Antiga, et al. Pytorch: An imperative style, high-performance deep learning library. *Advances in neural information processing systems*, 32, 2019. 3

[13] Wenzhe Shi, Jose Caballero, Ferenc Huszar, Johannes Totz, Andrew P. Aitken, Rob Bishop, Daniel Rueckert, and Zehan Wang. Real-time single image and video super-resolution using an efficient sub-pixel convolutional neural network. In *CVPR*, 2016. 1

[14] Radu Timofte, Eirikur Agustsson, Luc Van Gool, Ming-Hsuan Yang, Lei Zhang, et al. NTIRE 2017 challenge on single image super-resolution: Methods and results. In *CVPR Workshops*, 2017. 3

[15] Ashish Vaswani, Noam Shazeer, Niki Parmar, Jakob Uszkoreit, Llion Jones, Aidan N Gomez, Łukasz Kaiser, and Illia Polosukhin. Attention is all you need. *Advances in neural information processing systems*, 30, 2017. 1, 2

[16] Hang Wang, Xuanhong Chen, Bingbing Ni, Yutian Liu, and Jinfan Liu. Omni aggregation networks for lightweight image super-resolution. In *Proceedings of the IEEE/CVF Conference on Computer Vision and Pattern Recognition*, pages 22378–22387, 2023. 1

[17] Yulun Zhang, Kunpeng Li, Kai Li, Lichen Wang, Bineng Zhong, and Yun Fu. Image super-resolution using very deep residual channel attention networks. In *ECCV*, 2018. 1